Filed on behalf of Western Digital Technologies, Inc.
By: Michelle E. Armond
Douglas R. Wilson
Josepher Li
Monica Arnold
Yue Han
ARMOND WILSON LLP
4685 MacArthur Court, Suite 390
Newport Beach, CA 92660
Telephone: (949) 932-0778
Email: ipr@armondwilson.com

UNITED STATES PATENT AND TRADEMARK OFFICE

BEFORE THE PATENT TRIAL AND APPEAL BOARD

WESTERN DIGITAL TECHNOLOGIES, INC.,
Petitioner,

v.

GODO KAISHA IP BRIDGE 1,
Patent Owner.

Case No. IPR2024-01385
U.S. Patent No. 8,319,263

PETITION FOR *INTER PARTES* REVIEW OF U.S. PATENT NO. 8,319,263

TABLE OF CONTENTS

I. INTRODUCTION 1

II. BACKGROUND 3

A. The District Court Litigation 3

B. Magnetic Memory Development 4

C. Quantum Electron Tunneling In MTJs: Barrier Heights And Fermi Levels 8

D. Research Into Materials To Increase TMR 10

1. Ferromagnetic Materials 11

2. Barrier Layers 12

E. Oxygen Vacancy Defects In MgO Thin Films 15

F. The ’263 Patent Family 17

G. The Prosecution Of The ’263 Patent 18

H. Soukup (EX1028) 20

I. Bowen (EX1026) 21

J. Nagahama (EX1027) 22

K. Sunai (EX1029/EX1030) 24

III. CLAIM CONSTRUCTION 26

IV. STATEMENT OF PRECISE RELIEF REQUESTED FOR EACH CHALLENGED CLAIM (37 C.F.R. §42.104(b)(1)-(2)) 26

A. Grounds Presented 26

B. The Prior Art 26

1. March 10, 2004 Critical Date For The ’263 Patent 26

2. Prior Art Status 28

V. LEVEL OF ORDINARY SKILL IN THE ART 29

VI. GROUND 1: CLAIMS 1-4 ARE OBVIOUS OVER BOWEN IN VIEW OF SOUKUP (AND SUNAI) 30

A. Claim 1 30

1. Claim 1[preamble]: "A magnetoresistive device having a tunnel barrier junction structure, the magnetoresistive device comprising:" 30

2. Claim 1[a]: "a first ferromagnetic material layer of BCC structure;" 30

3. Claim 1[b]: "a second ferromagnetic material layer of a BCC structure; and" 34

4. Claim 1[c]: "a tunnel barrier layer located between the first and second ferromagnetic material layers, and wherein the tunnel barrier layer comprises:" 34

5. Claim 1[d]: "a single-crystalline magnesium oxide layer in which (001) crystal plane is preferentially oriented or a poly-crystalline magnesium oxide layer in which (001) crystal plane is preferentially oriented, and" 35

6. Claim 1[e]: "wherein the tunnel barrier layer has a tunnel barrier height ϕ in a range of 0.2 to 0.5 eV." 37

B. Claim 2: "The magnetoresistive device according to claim 1, wherein at least one of the first and second ferromagnetic material layers comprises CoFeB alloy." 40

C. Claim 3 41

1. Claim 3[pre]: "The magnetoresistive device according to claim 1," 41

2. Claim 3[a]: "wherein said tunnel barrier height ψ is obtained by fitting J-V characteristics of the tunnel barrier junction structure to an equation (1) $J=[(2m\phi)^{1/2}/\Delta s](e/h)^2\times\exp[-(4\pi\Delta s/h)\times(2m\phi)^{1/2}]\times V$ (1)" 41

3. Claim 3[b]: "where J is a tunnel current density flowing through the tunnel barrier layer, V is an applied bias voltage that is 100 mV or smaller, m is a mass of the free electron, e is the elementary electric charge, h is the Planck's constant, Δs is aneffective thickness of the tunnel barrier layer that is approximately equivalent to (T_{MgO}−0.5 nm), and t_{MgO} is an actual thickness of the tunnel barrier layer determined using a cross-sectional transmission electron microscope image." 43

D. Claim 4: "The magnetoresistive device according to claim 3, wherein at least one of the first and second ferromagnetic material layers comprises CoFeB alloy." 46

VII. GROUND 2: CLAIMS 1-4 ARE OBVIOUS OVER NAGAHAMA IN VIEW OF SOUKUP (AND SUNAI) 46

A. Claim 1 47

1. Claim 1[preamble]: "A magnetoresistive device having a tunnel barrier junction structure, the magnetoresistive device comprising:" 47

2. Claim 1[a]: "a first ferromagnetic material layer of BCC structure;" 47

3. Claim 1[b]: "a second ferromagnetic material layer of a BCC structure; and" 51

4. Claim 1[c]: "a tunnel barrier layer located between the first and second ferromagnetic material layers, and wherein the tunnel barrier layer comprises:" 53

5. Claim 1[d]: "a single-crystalline magnesium oxide layer in which (001) crystal plane is preferentially oriented or a poly-crystalline magnesium oxide layer in which (001) crystal plane is preferentially oriented, and" 55

6. Claim 1[e]: "wherein the tunnel barrier layer has a tunnel barrier height ϕ in a range of 0.2 to 0.5 eV." 55

B. Claim 2: "The magnetoresistive device according to claim 1, wherein at least one of the first and second ferromagnetic material layers comprises CoFeB alloy." 58

C. Claim 3 59

1. Claim 3[pre]: "The magnetoresistive device according to claim 1," 59

2. Claim 3[a]: "wherein said tunnel barrier height ψ is obtained by fitting J-V characteristics of the tunnel barrier junction structure to an equation (1) $J=[(2m\phi)^{1/2}/\Delta s](e/h)^2\times\exp[-(4\pi\Delta s/h)\times(2m\phi)^{1/2}]\times V$ (1)" 59

3. Claim 3[b]: "where J is a tunnel current density flowing through the tunnel barrier layer, V is an applied bias voltage that is 100 mV or smaller, m is a mass of the free electron, e is the elementary electric charge, h is the Planck's constant, Δs is aneffective thickness of the tunnel barrier layer that is approximately equivalent to ($T_{MgO}-0.5$ nm), and t_{MgO} is an actual thickness of the tunnel barrier layer determined using a cross-sectional transmission electron microscope image." 60

D. Claim 4: "The magnetoresistive device according to claim 3, wherein at least one of the first and second ferromagnetic material layers comprises CoFeB alloy." 61

VIII. SECONDARY CONSIDERATIONS 61

IX. DISCRETIONARY DENIAL IS UNWARRANTED HERE 62

A. *Fintiv* Is No Roadblock To Institution 62

B. Discretionary Denial Under 35 U.S.C. §325(d) Is Unwarranted 63

X. CONCLUSION 68

XI. GROUNDS FOR STANDING 68

XII. MANDATORY NOTICES 68

A. Real Party-In-Interest (37 C.F.R. §42.8(b)(1)) 68

B. Related Matters (37 C.F.R. §42.8(b)(2)) 68

C. Lead and Backup Counsel (37 C.F.R. §42.8(b)(3)) 68

D. Service Information (37 C.F.R. §42.8(b)(4)) 69

TABLE OF AUTHORITIES

Advanced Bionics v. MED-EL Elektromedizinische Geräte,
IPR2019-01469, 2020 WL 740292
(P.T.A.B. Feb. 13, 2020).....63, 64, 65, 66, 67

Amcol Int'l v. Oil-Dri Co.,
IPR2022-01107, Paper 10 (P.T.A.B. Dec. 5, 2022).....67

Apple v. Fintiv,
IPR2020-00019, 2020 WL 2126495 (P.T.A.B. Mar. 20, 2020).....62

BMW of N. Am. v. Stragent,
IPR2021-00419, 2021 WL 3039219 (P.T.A.B. July 19, 2021) 64

F5 v. Sunstone Info.,
IPR2022-00483, Paper 13 (P.T.A.B. Aug. 12, 2022) 62

Group One v. Hallmark Cards,
254 F.3d 1041 (Fed. Cir. 2001) 27

JUUL Labs. v. NJOY,
IPR2024-00160, 2024 WL 2697567 (P.T.A.B. May 24, 2024).....65

KSR Int'l v. Teleflex,
550 U.S. 398 (2007).....32, 36, 50

Lifecore Fitness v. Woodway USA,
IPR2024-00083, Paper 13 (P.T.A.B. May 17, 2024) 65

Precision Planting v. Maschio Gaspardo,
IPR2024-00008, 2024 WL 1283507 (P.T.A.B. Mar. 26, 2024).....63

Spectrum Sols. v. Longhorn Vaccines,
IPR2021-00847, Paper 13 (P.T.A.B. Nov. 12, 2021) 40

Vivid Techs. v. Am. Sci. & Eng'g,
200 F.3d 795 (Fed. Cir. 1999) 26

OTHER AUTHORITIES

35 U.S.C. § 102 .....26, 27, 28

35 U.S.C. § 112 19

35 U.S.C. § 325 .....62, 63

MPEP § 2139.01 27

MPEP § 2151 27

TABLE OF EXHIBITS

Exhibit No.	Description
1001	U.S. Patent No. 7,884,403 ("'403 Patent")
1002	File History for U.S. Patent No. 7,884,403
1003	U.S. Patent No. 8,319,263 ("'263 Patent")
1004	File History for U.S. Patent No. 8,319,263
1005	U.S. Patent No. 8,405,134 ("'134 Patent")
1006	File History for U.S. Patent No. 8,405,134
1007	U.S. Patent No. 9,123,463 ("'463 Patent")
1008	File History for U.S. Patent No. 9,123,463
1009	U.S. Patent No. 9,608,198 ("'198 Patent")
1010	File History for U.S. Patent No. 9,608,198
1011	U.S. Patent No. 10,367,138 ("'138 Patent")
1012	File History for U.S. Patent No. 10,367,138
1013	U.S. Patent No. 10,680,167 ("'167 Patent")
1014	File History for U.S. Patent No. 10,680,167
1015	U.S. Patent No. 11,737,372 ("'372 Patent")
1016	File History for U.S. Patent No. 11,737,372
1017	U.S. Patent No. 11,968,909 ("'909 Patent")
1018	File History for U.S. Patent No. 11,968,909
1019	Patent Family Tree
1020	Japanese Patent No. JP2004071186
1021	English Translation of Japanese Patent No. JP2004071186, from '372 Patent File History (EX1015)
1022	Japanese Patent Application No. JP2004313350
1023	Certified English Translation (with Translator Declaration) of Japanese Patent Application No. JP2004313350
1024	Declaration of Jeffrey Bokor, Ph.D.

Exhibit No.	Description
1025	CV of Jeffrey Bokor, Ph.D.
1026	Bowen et al., *Large magnetoresistance in Fe/MgO/FeCo(001) epitaxial tunnel junctions on GaAs(001)*, 79 Appl. Phys. Letters 1655-1657 (2001) ("Bowen")
1027	European Patent Application No. EP1391942A1 to Nagahama et al. ("Nagahama")
1028	Soukup et al., *Voltage-Current Characteristics for Electrical Conduction Through Thin MgO Films*, 41 J. Appl. Phys. 3229-3236 (1970) ("Soukup")
1029	Japanese Patent Application Publication No. JP2002204004A to Sunai et al. ("Sunai")
1030	Certified English Translation (with Translator Declaration) of Japanese Patent Application Publication No. JP2002204004A to Sunai et al. ("Sunai")
1031	Simmons, *Generalized Formula for the Electric Tunnel Effect between Similar Electrodes Separated by a Thin Insulating Film*, 34 J. Appl. Phys. 1793-1803 (1963)
1032	Trasatti, *Electronegativity, Work Function, and Heat of Adsorption of Hydrogen on Metals*, 67 J. Chem. Soc. 229-236 (1972)
1033	Jullière, *Tunneling between ferromagnetic films,* 54A Phys. Letters 225-226 (1975)
1034	Miyazaki et al., *Giant magnetic tunneling effect in Fe / $A1_2O_3$ / Fe junction*, 139 J. Magnetism & Magnetic Materials L231-L234 (1995)
1035	Moodera et al., *Large Magnetoresistance at Room Temperature in Ferromagnetic Thin Film Tunnel Junctions*, 74 Phys. Rev. Lett. 3273–3276 (1995)
1036	Wulff et al., *Characterization of MgO Layers on Different Alumina and Glass Substrates by Grazing Incidence Diffractometry and Grazing Incidence X-ray Reflectometry*, 23 Surface & Interface Analysis 148-154 (1995)

Exhibit No.	Description
1037	Castanier et al., *Oxygen vacancies on MgO(100)*, 364 Surf. Sci. 1-16 (1996)
1038	Moodera et al., *Ferromagnetic–insulator–ferromagnetic tunneling: Spin-dependent tunneling and large magnetoresistance in trilayer junctions (invited)*, 79 J. Appl. Phys. 4724-4729 (1996)
1039	Tehrani et al., *Progress and Outlook for MRAM Technology*, 35 IEEE Trans. Magn. 2814-2819 (1999)
1040	Yoon et al., *Growth characteristics and surface roughening of vapor-deposited MgO thin films*, 60 Phys. Rev. 2839-2843 (1999)
1041	Wollschläger et al., *Stoichiometry and morphology of MgO films grown reactively on Ag(100)*, 142 Appl. Surface Science 129-134 (1999)
1042	Pacchioni, *Ab initio theory of point defects in oxide materials: structure, properties, chemical reactivity*, 2 Solid State Scis. 161-179 (2000)
1043	Heinrich et al., *Single Crystal Tunnel Junctions*, IEEE (2000)
1044	Butler et al., *Spin-dependent tunneling conductance of Fe|MgO|Fe sandwiches*, 63 Phys. Rev. B 054416 (2001)
1045	Klaua et al., *Growth, structure, electronic, and magnetic properties of MgO/Fe(001) bilayers and Fe/MgO/Fe(001) trilayers*, 64 Phys. Rev. B. 134411 (2001)
1046	Mathon et al., *Theory of tunneling magnetoresistance of an epitaxial Fe/MgO/Fe(001) junction*, 63 Phys. Rev. 220403 (2001)
1047	Wulfhekel et al., *Single-crystal magnetotunnel junctions*, 78 Appl. Phys. Letters 509-511 (2001)
1048	Bogicevic et al., *Effect of oxide vacancies on metal island nucleation*, 515 Surf. Sci. L481-486 (2002)
1049	Kim et al., *MRAM Technology for High Density Memory Application*, 2 J. Semicond. Tech. Sci. 185-196 (2002)
1050	Yuasa et al., *A large quantum-well oscillation of the TMR effect*, 35 J. Phys. D. 2427-2431 (2002)
1051	Meyerheim, et al., *Geometrical and Compositional Structure at Metal-Oxide Interfaces: MgO on Fe(001)*, 87 Phys. Rev. Letters 076102 (2001)

Exhibit No.	Description
1052	Faure-Vincent et al., *High tunnel magnetoresistance in epitaxial Fe/MgO/Fe tunnel junctions*, 82 App. Phys. Letters 4507-4509 (2003)
1053	Mitani et al., *Fe/MgO/FeCo(100) epitaxial magnetic tunnel junctions prepared by using in situ plasma oxidation*, 93 J. Appl. Phys. 8041-8043 (2003)
1054	Goniakowski et al., *Electronic States and Schottky Barrier Height at Metal/MgO(100) Interfaces*, 12 Interface Science 93–103 (2004).
1055	Wang et al., *70% TMR at Room Temperature for SDT Sandwich Junctions With CoFeB as Free and Reference Layers*, 40 IEEE Trans. Magn. 2269-2271 (2004)
1056	U.S. Patent Publication No. 2004/0136232A1 ("Hosomi")
1057	Dieny et al., *Introduction to Magnetic Random-Access Memory* (IEEE Press 2017) (excerpts)
1058	Amodeo et al., *Dislocations and Plastic Deformation in MgO Crystals: A Review*, 8 Crystals 240 (2018)
1059	Matthews et al., *Comment: "Generalized formula for the electric tunnel effect between similar electrodes separated by a thin insulating film,"* 123 J. Appl. Phys. 136101 (2018)
1060	Jimbo et al., *Thermal stability of spin valves using amorphous CoFeB*, 165 J. Magnetism & Magnetic Materials 308-311 (1997)
1061	Cardoso et al., *Ferromagnetic Coupling Field Reduction in CoFeB Tunnel Junctions Deposited by Ion Beam*, 40 IEEE Trans. Magn. 2272-2274 (2004)
1062	U.S. Patent No. 7,270,896 ("Parkin")
1063	Complaint, *Godo Kaisha IP Bridge 1 v. Western Digital Corporation*, Case No. 24-cv-00342-RGA (D. Del. Mar. 15, 2024) (without exhibits)
1064	Claim Chart for '403 Patent, Exhibit D to Complaint, *Godo Kaisha IP Bridge 1 v. Western Digital Corporation*, Case No. 24-cv-00342-RGA (D. Del. Mar. 15, 2024)

Exhibit No.	Description
1065	Claim Chart for ’263 Patent, Exhibit E to Complaint, *Godo Kaisha IP Bridge 1 v. Western Digital Corporation*, Case No. 24-cv-00342-RGA (D. Del. Mar. 15, 2024)
1066	Claim Chart for ’372 Patent, Exhibit F to Complaint, *Godo Kaisha IP Bridge 1 v. Western Digital Corporation*, Case No. 24-cv-00342-RGA (D. Del. Mar. 15, 2024)
1067	First Amended Complaint, *Godo Kaisha IP Bridge 1 v. Western Digital Corporation*, Case No. 24-cv-00342-RGA (D. Del. July 8, 2024)
1068	Amended Claim Chart for ’403 Patent, Exhibit AA to First Amended Complaint, *Godo Kaisha IP Bridge 1 v. Western Digital Corporation*, Case No. 24-cv-00342-RGA (D. Del. July 8, 2024)
1069	Amended Claim Chart for ’263 Patent, Exhibit BB to First Amended Complaint, *Godo Kaisha IP Bridge 1 v. Western Digital Corporation*, Case No. 24-cv-00342-RGA (D. Del. July 8, 2024)
1070	Amended Claim Chart for ’372 Patent, Exhibit CC to First Amended Complaint, *Godo Kaisha IP Bridge 1 v. Western Digital Corporation*, Case No. 24-cv-00342-RGA (D. Del. July 8, 2024)
1071	Claim Chart for ’909 Patent, Exhibit DD to First Amended Complaint, *Godo Kaisha IP Bridge 1 v. Western Digital Corporation*, Case No. 24-cv-00342-RGA (D. Del. July 8, 2024)
1072	Claim Chart for ’138 Patent, Exhibit EE to First Amended Complaint, *Godo Kaisha IP Bridge 1 v. Western Digital Corporation*, Case No. 24-cv-00342-RGA (D. Del. July 8, 2024)
1073	Claim Chart for ’198 Patent, Exhibit FF to First Amended Complaint, *Godo Kaisha IP Bridge 1 v. Western Digital Corporation*, Case No. 24-cv-00342-RGA (D. Del. July 8, 2024)
1074	Claim Chart for ’463 Patent, Exhibit GG to First Amended Complaint, *Godo Kaisha IP Bridge 1 v. Western Digital Corporation*, Case No. 24-cv-00342-RGA (D. Del. July 8, 2024)
1075	Claim Chart for ’167 Patent, Exhibit HH to First Amended Complaint, *Godo Kaisha IP Bridge 1 v. Western Digital Corporation*, Case No. 24-cv-00342-RGA (D. Del. July 8, 2024)

Exhibit No.	Description
1076	Claim Chart for ’134 Patent, Exhibit II to First Amended Complaint, *Godo Kaisha IP Bridge 1 v. Western Digital Corporation*, Case No. 24-cv-00342-RGA (D. Del. July 8, 2024)
1077	Docket *Godo Kaisha IP Bridge 1 v. Western Digital Corporation*, Case No. 24-cv-00342-RGA (D. Del. Mar. 15, 2024)
1078	U.S. District Courts – Combined Civil and Criminal Federal Court Management Statistics (Dec. 31, 2023), https://www.uscourts.gov/statistics-reports/federal-court-management-statistics-december-2023 (excerpts)
1079	Microsoft Computer Dictionary (5th ed. 2002) (excerpts)

LIST OF CHALLENGED CLAIMS

1[pre] A magnetoresistive device having a tunnel barrier junction structure, the magnetoresistive device comprising:

1[a] a first ferromagnetic material layer of BCC structure;

1[b] a second ferromagnetic material layer of a BCC structure; and

1[c] a tunnel barrier layer located between the first and second ferromagnetic material layers, and wherein the tunnel barrier layer comprises:

1[d] a single-crystalline magnesium oxide layer in which (001) crystal plane is preferentially oriented or a poly-crystalline magnesium oxide layer in which (001) crystal plane is preferentially oriented, and

1[e] wherein the tunnel barrier layer has a tunnel barrier height Φ in a range of 0.2 to 0.5 eV.

2. The magnetoresistive device according to claim 1, wherein at least one of the first and second ferromagnetic material layers comprises CoFeB alloy.

3[pre] The magnetoresistive device according to claim 1,

3[a] wherein said tunnel barrier height ψ is obtained by fitting J-V characteristics of the tunnel barrier junction structure to an equation (1)

$$J=[(2m\phi)^{1/2}/\Delta s](e/h)^2\times\exp[-(4\pi\Delta s/h)\times(2m\phi)^{1/2}]\times V \qquad (1)$$

3[b] where J is a tunnel current density flowing through the tunnel barrier layer, V is an applied bias voltage that is 100 mV or smaller, m is a mass of the free electron, e is the elementary electric charge, h is the Planck's constant, Δs is an effective thickness of the tunnel barrier layer that is approximately equivalent to (T_{MgO}−0.5 nm), and t_{MgO} is an actual thickness of the tunnel barrier layer determined using a cross-sectional transmission electron microscope image.

4. The magnetoresistive device according to claim 3, wherein at least one of the first and second ferromagnetic material layers comprises CoFeB alloy.

I. INTRODUCTION

This IPR concerns the storage elements underlying magnetoresistive random-access memory (MRAM). MRAM is a niche memory device: a non-volatile random-access memory that stores data in magnetic storage elements called magnetic tunnel junctions (MTJs, shown below), comprising two ferromagnetic electrodes separated by a thin insulating layer:

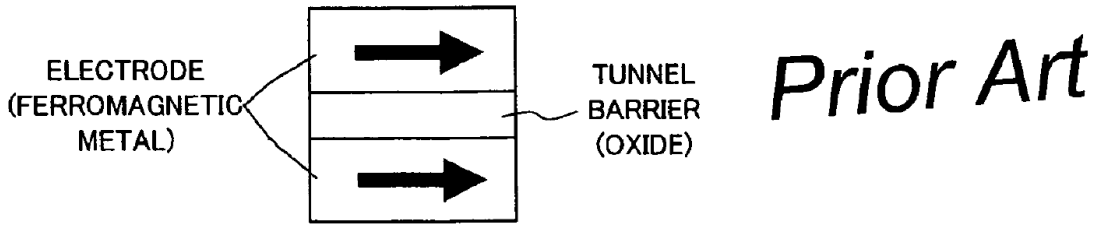

Patent Owner IP Bridge claims Shinji Yuasa invented magnesium oxide MTJs used in MRAM as claimed in the ’263 Patent at issue here and the related asserted patents. But “[n]onvolatile MRAM is not really new.” EX1057 at xiv. Dr. Yuasa himself acknowledged that “[r]esearch and development of MRAM devices, which are fast and non-volatile memory devices, are being extensively carried out” before he filed his patent. EX1003 at 1:28-31. The ’263 Patent instead purports to claim as its own decades of research by the brightest minds in quantum mechanics and device fabrication.

In the 1930s, researchers discovered a surprising phenomenon unexplained by classical physics: current flowing through a thin insulator sandwiched between two

electrodes. EX1031 at 1793 n.2. Simmons' influential 1963 paper quantified the "tunnel effect" and provided a formula for quantifying the "barrier height," or the energy required for electrons to tunnel across the insulating barrier:

$$J = [3(2m\varphi)^{\frac{1}{2}}/2s](e/h)^2 V \times \exp[-(4\pi s/h)(2m\varphi_0)^{\frac{1}{2}}].$$

EX1031 at Abstract, 1797 (Eq. (25)).

During prosecution of the parent patent to the '263 Patent, U.S. Patent No. 7,884,403, the Examiner believed that the claimed barrier height of 0.2 to 0.5 eV was inventive, EX1002 at 235, and applicant never informed him otherwise, *see* EX1002 at 254-60; EX1028 at Abstract (Soukup: barrier height of 0.33 eV). All claims of the '263 Patent require the same barrier height of 0.2 to 0.5 eV, yet the applicant never corrected the Examiner during prosecution of the '263 Patent either. EX1003 at 9:34-10:33; *see generally* EX1004. Nor was the Examiner informed of Patent Owner's position that the "the presence of oxygen vacancy defects indicates a tunnel barrier height as claimed." *E.g.*, EX1065 at 20; EX1004. Claims 3-4 of the '263 Patent merely recites Simmons' famous formula, EX1003 at 10:16-33, and that is not inventive either, EX1031.

This Petition presents two grounds showing all claims of the '263 Patent were obvious:

- Bowen (Ground 1): A 2001 paper by Bowen *et al*. in *Applied Physics Letters* (EX1026) builds high-quality FeCo/MgO/Fe MTJs to achieve a high TMR. Bowen observed the presence of defects in the MgO barrier led to increased tunneling, suggesting a low barrier height, previously observed by Soukup. Sunai taught the advantages of using CoFeB electrodes in MgO MTJs for MRAM.
- Nagahama (Ground 2): A 2002 European patent application publication also naming Dr. Yuasa and collaborators (EX1027) disclosed nearly every aspect of an MgO MTJ he later sought to claim in the '263 Patent, including a TMR of more than 90%, rendering the claims obvious over Nagahama coupled with Soukup's observations about the barrier height.

In short, Dr. Yuasa's effort to individually stake a claim to the territory of MgO MTJs should be rejected, and his claims revoked.

II. BACKGROUND

A. The District Court Litigation

A few years ago, Patent Owner IP Bridge bought Dr. Yuasa's patents on MgO-based MTJs, including the '263 Patent challenged here. EX1063 ¶¶3, 10. In March, IP Bridge filed suit in the District of Delaware against Western Digital, asserting that essentially its entire hard drive product line infringed the '263 Patent and two related patents. *Id.* ¶¶28-30, 33-35. It filed a similar suit against Seagate. *Infra* §XII.B.

IP Bridge touted Dr. Yuasa's "pioneering contribution to the MgO-based MTJs" and explained that his patents "are directed to a MTJ structure comprising a thin insulating layer (a tunnel barrier layer) sandwiched between two ferromagnetic metal electrodes." EX1063 ¶¶12, 14. The Complaint says Dr. Yuasa's three-layer MTJ structure (right) obtained "the highest MR ratios." *Id.* ¶18 (reproducing EX1001, Fig. 1(B)).

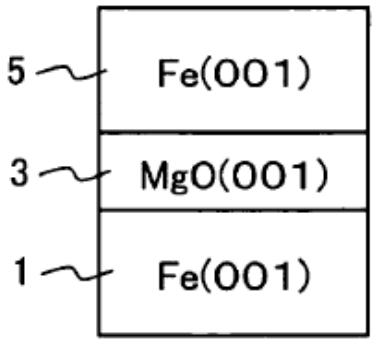

Almost nothing has happened in the Delaware litigation. EX1077. Confronted with a motion to dismiss its original complaint, IP Bridge filed a First Amended Complaint asserting six more related patents. EX1067 ¶2; EX1019. Western Digital filed another motion to dismiss and also moved to transfer the case to California. As of the filing of this Petition, both motions remain pending. EX1077.

B. Magnetic Memory Development

Conventional semiconductor-based memories like DRAM and EEPROM store data as electrical charges. EX1024 ¶30. Magnetic memory operates differently. As shown below, the simplest structure for magnetic memory conventionally is a magnetic tunnel junction (MTJ) with two ferromagnetic layers separated by a thin oxide layer:

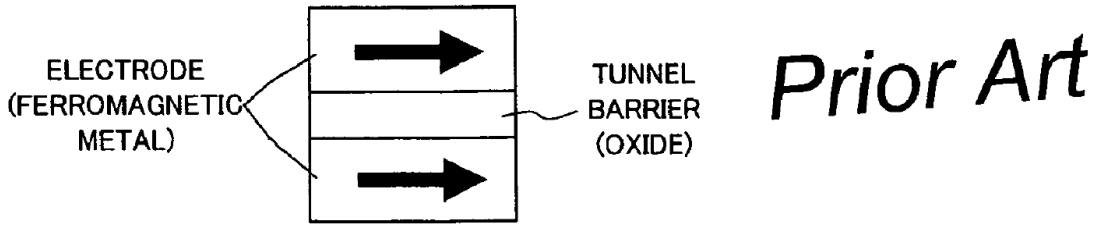

EX1003 at Fig. 8(A); *see also id.* at Fig. 8(B), 1:32-56; EX1027 at Fig. 3; EX1030 at Fig. 1; EX1024 ¶31-33.

MRAM stores bits in MTJs, with a transistor typically controlling access to individual MTJs, as shown below.

FIG. 9 (B)

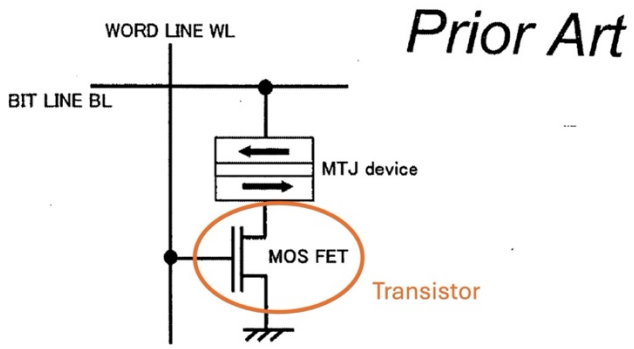

EX1003 at Fig. 9(B) (annotated); EX1030 ¶¶37-40, Figs. 4-5; EX1039 at 2816, 2818 (MRAM cell "transistors provide bit selection for reading individual bits."); EX1049 at Abstract (explaining that "[t]he simplest architecture of MRAM cell is a combination of MTJ… as a data storage part and MOS transistor as a data selection part"), Fig. 2 (showing "MRAM cell with a MTJ and a transistor"); EX1024 ¶30.

One MTJ electrode has a fixed polarity, while the other electrode's magnetization can be changed by an external electric field. EX1030 ¶19. To read the bit, typically the MRAM runs a small current through the electrodes and tunnel barrier and reads the resistance of the MTJ. *Id.*; EX1003 at 1:41-56. As shown at right, if the MTJ has low resistance, this indicates the electrodes have **parallel magnetization**; high resistance indicates **antiparallel magnetization**. EX1003 at 1:41-51, Figs. 8(A)-8(B) (excerpted, annotated); EX1024 ¶¶34-35.

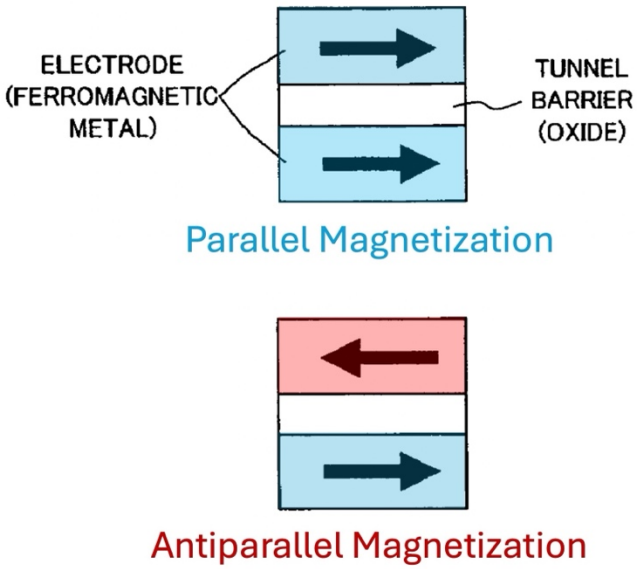

Researchers were particularly interested in optimizing MTJs to improve MRAM performance. EX1026 at 1655; EX1045 at 1; EX1024 ¶¶36, 38-39. An "important parameter" was the **tunnel magnetoresistance ratio (TMR)**, measuring the tunneling resistance across the MTJ. EX1055 at 2269 ("TMR value is also the most important parameter…."). In 1973, the "pioneering work of Jullière" (EX1033), EX1057 at 9, discovered tunneling magnetoresistance in an MTJ at a low temperature (4.2 K, -452°F), EX1033 at 225. Mathematically, the TMR for an MTJ

is equal to the difference in the resistance between the antiparallel (R_{ap}) and parallel states (R_p), divided by the parallel state resistance:

$$\text{TMR} = \frac{\Delta R}{R_p} = \frac{R_{ap} - R_p}{R_p}$$

EX1035 at 3273; EX1027 ¶2; EX1003 at 4:50-58; EX1024 ¶37. Thus, high anti-parallel resistance R_{ap} compared to lower parallel resistance R_p results in high TMR. *Id.*

Higher TMRs long promised improved performance for MRAM. EX1049 at 186 ("[L]arger MR ratio is the [sic] another important issue for the high speed MRAM operations."); EX1003 at 2:26-43; EX1024 ¶40. High TMR allowed lower voltages (and smaller currents) to determine the MTJ's resistance (*i.e.*, read the memory cell) and lowered power consumption. EX1055 at 2269; EX1024 ¶43. High TMR also improved the signal-to-noise ratio; made sensing the correct state more accurate; and paved the way for smaller, denser MRAMs. EX1055 at 2269; EX1049 at 194-95; EX1024 ¶¶41-42, 44.

Two decades after Jullière, Miyazaki and Moodera separately measured TMR above 10%, demonstrating the tunneling effect at room temperature. EX1034 at Abstract (reporting TMR of "18% at 300 K"); EX1035 at Abstract (TMR of 11.8% at 295 K). "Since 1995, extensive experimental effort has been made on MTJs with amorphous AlO barriers and ferromagnetic electrode[s]...." EX1057 at 43. The

patent itself acknowledges that then-current MTJ devices exhibited TMRs of "approximately 70%." EX1003 at 5:6-9.

In 2001, separate research teams led by Butler (EX1044) and Mathon (EX1046) calculated that MTJs with a crystalline MgO barrier layer would achieve TMRs of over 1000%. EX1053 at 8041, 8043 nn.9-10 (citing EX1044, EX1046). Butler's and Mathon's publications spurred a scientific gold rush, with researchers publishing an explosion of research into MgO MTJs. As one researcher put it: "TMR[] in magnetic tunnel junctions (MTJs) is widely studied nowadays due to the large-scale potential applications of MTJs" in MRAM and data storage. EX1052 at 4507.

C. Quantum Electron Tunneling In MTJs: Barrier Heights And Fermi Levels

MTJ behavior is explained by quantum mechanics. Current typically flows through conductors and is inhibited by insulators. EX1024 ¶45. But in the 1930s, researchers discovered that current (electrons) could flow between two electrodes separated by a very thin insulating layer (or barrier). EX1031 at 1793 n.2 (citing Sommerfeld and Bethe (1933)).

Simmons published an influential 1963 paper describing the "tunnel effect" of electrons across the barrier using quantum mechanics and providing a

mathematical formula to estimate the barrier height, which is explained below. EX1031 at Abstract, 1797 (Eq. (25)).

The **Fermi level** (E_F) corresponds to this highest energy level occupied by electrons at 0 K. EX1024 ¶¶46-47. Electrons that lie close to the Fermi level participate in tunneling. *Id.*; EX1052 at 4508; EX1031 at 1802.

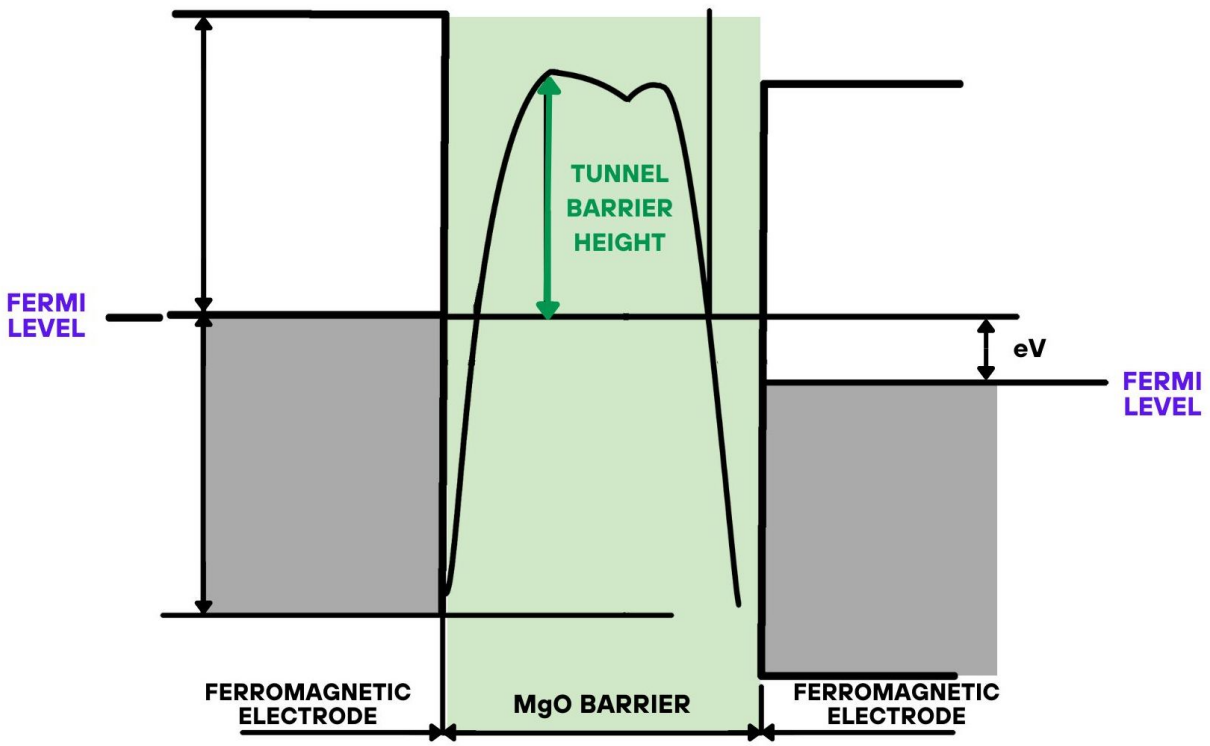

As shown above, tunneling can occur across a barrier (green) separating two ferromagnetic electrodes (gray). EX1031 at 1794, Fig. 1. At equilibrium, the Fermi levels (E_F) of the two electrodes align, so there is no net current flow (*i.e.*, the same number of electrons tunnel in both directions across the barrier). EX1031 at 1796 ("When V is zero, a state of dynamic equilibrium can be considered to exist—that

is, a current … [is] flowing in either direction."). If a bias voltage is applied to the junction, the Fermi level of the collector electrode (right) lowers by an amount (eV) compared to the injector electrode (left), allowing the electrons to tunnel across the barrier from the injector to empty states above the Fermi level in the collector. EX1031 at 1796, Figs. 1, 3.

In an MTJ, the **tunnel barrier height** represents the difference between the bottom of the conduction band of the tunnel barrier layer and the **Fermi level** of electrons in the conductor. EX1031 at Fig. 1; EX1047 at 509; EX1003 at 3:46-51; EX1024 ¶48. Simmons' 1963 paper provided a widely used formula for calculating the tunnel barrier height.[1] EX1031 at 1797 (Eq. (25)); EX1026 at 1656; EX1035 at 3274; EX1003 at 7:10-16; EX1024 ¶49.

D. Research Into Materials To Increase TMR

It was known that "the tunnel characteristics are an intrinsic function of the thermal properties of the *insulator*, as well as of the electrodes." EX1031 at 1802

---

[1] Simmons' formula for the low-voltage range is:

$$J = [3(2m\varphi)^{\frac{1}{2}}/2s](e/h)^2 V \times \exp[-(4\pi s/h)(2m\varphi_0)^{\frac{1}{2}}].$$

EX1031 at 1797 (Eq. (25)). Researchers later corrected Simmons' formula to remove an erroneous factor of 3/2:

$$J_c = \frac{(2m\phi_0)^{\frac{1}{2}}}{s}\left(\frac{e}{h}\right)^2 V \exp\left[-\frac{4\pi s}{h}(2m\phi_0)^{\frac{1}{2}}\right].$$

EX1059 at 1 (Eq. (1)).

(emphasis in original); *see also* EX1050 at 2427 (Yuasa: "The TMR effect is also known to be sensitive to the barrier/electrode interface" and "barrier materials."). To improve tunneling and TMR, researchers studied different materials for the ferromagnetic electrodes and barrier layer. *E.g.*, EX1055 at 2269; EX1024 ¶50.

1. Ferromagnetic Materials

Well-known ferromagnetic materials such as Fe, Ni, Co, and their alloys typically have crystalline structures. EX1030 ¶33 ("ferromagnetic materials" include "Fe, Co, Ni, and alloys containing them"); EX1024 ¶¶54-55. Alignment between the crystal of the electrodes and the barrier layer facilitates electron tunneling, reducing the barrier height and increasing TMR. EX1024 ¶¶56-57; EX1044 at 1; EX1046 at 1.

Researchers also found that alloys of iron (Fe) and cobalt (Co) improved TMR. EX1050 at 2428 (Yuasa 2002 study on FeCo electrodes); EX1026 at 1655 (depositing $Fe_{50}Co_{50}$ electrode layers); EX1052 at 4507 (using Fe and Co layers to try to achieve the calculated high TMRs); EX1024 ¶58.

By the early 2000s, researchers investigated using CoFeB alloys to increase TMR in magnetic memory. EX1030 ¶¶25-29; EX1055 at 2269-70 ("benefit of using CoFeB is multifold" including "a higher TMR value"); EX1056 ¶39 (ferromagnetic layer "comprised of a CoFeB alloy… exhibits a larger TMR ratio"). Introducing boron (B) to form a CoFeB electrode resulted in an initially "amorphous structure,"

EX1055 at Abstract, where "crystallization is inhibited," EX1030 ¶¶24-25, 30. As a result, a "CoFeB/MgO/CoFeB MTJ can theoretically be grown on all kinds of underlayers." EX1057 at 47. Without B, CoFe films had to be deposited as thicker or discontinuous films, decreasing TMR. EX1030 ¶27; EX1024 ¶¶59-62.

2. Barrier Layers

Initially, there was significant interest in aluminum oxide (Al_2O_3) barrier layers. EX1024 ¶¶63-65; EX1052 at 4507; EX1044 at 1. But Al_2O_3 was amorphous and lacked an ordered crystalline lattice structure or symmetry with the electrodes. EX1044 at 1; EX1045 at 1; EX1003 at 5:13-21 (contrasting crystalline MgO and amorphous Al_2O_3 barriers). This "lattice disorder" resulted in incoherent tunneling with the electrons prone to scattering. EX1045 at 1. By the early 2000s, MTJs with Al_2O_3 barriers conventionally had TMRs "at approximately 70%." EX1003 at 2:37-39, 5:6-9; EX1063 ¶18; EX1055 at 2270 ("TMR value of 70.4%").

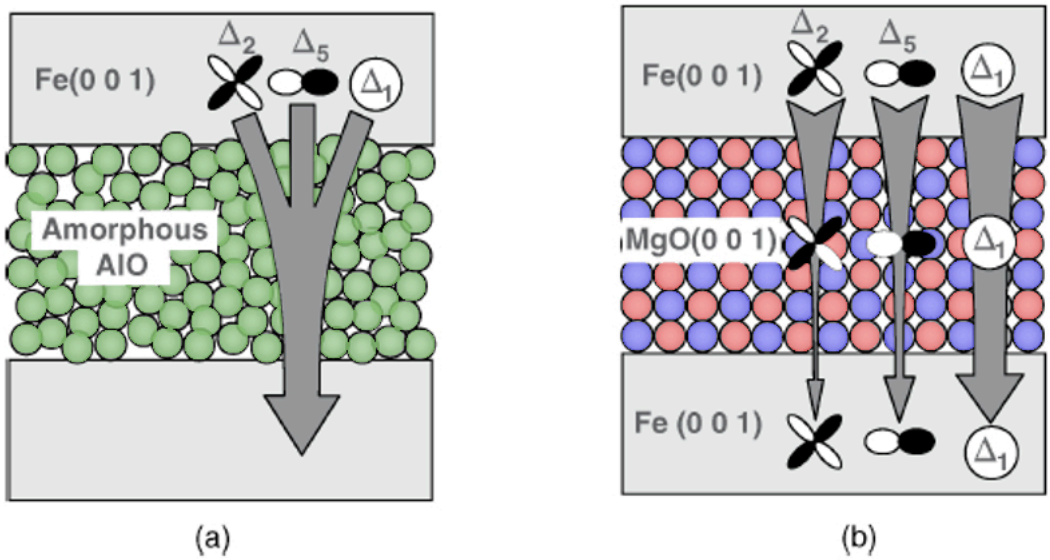

Figure 2.19 Schematic of electron tunneling through (a) an amorphous AlO barrier and (b) a crystalline MgO(0 0 1) barrier.

EX1057 at 44, Fig. 2.19 (annotated).

Thin film magnesium oxide (MgO) barriers had been studied for years. EX1028 at 3229; EX1038 at Abstract. MgO was known to have a low barrier height because of its ordered crystalline structure. EX1028 at Abstract (0.33 eV barrier height of an MgO thin film). EX1024 ¶¶66, 68, 70-71.

Single-crystalline MgO barriers grow in a cubic crystalline lattice like table salt. EX1003 at 4:28-29; EX1040 at 2839. Its symmetric structure results in the (001), (100), and (010) crystalline planes being the same:

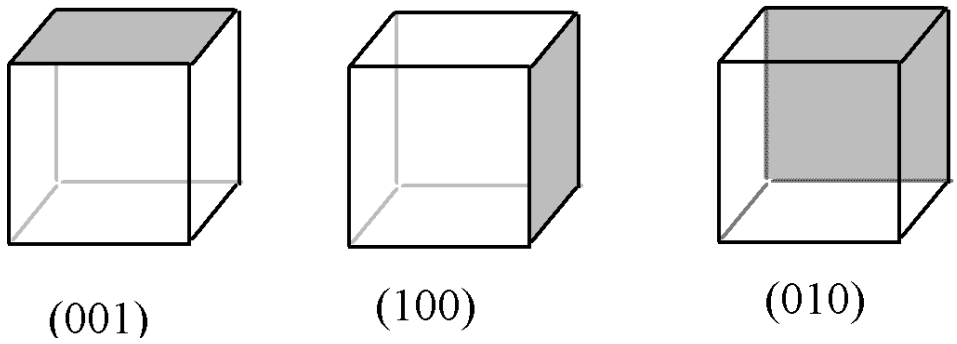

EX1003 at 4:28-30 ("[B]ecause MgO has a cubic crystal structure (NaCl structure), the (001) plane, the (100) plane, and the (010) plane are all equivalent."); EX1024 ¶¶51-53, 67.

In 2001, Butler and Mathon separately "calculated [the] optimistic TMR ratio is in excess of 1000% for an MgO barrier." EX1046 at Abstract; *see also* EX1044 at Fig. 16; EX1024 ¶69. Butler pointed out that tunneling across an MgO barrier was facilitated by the "symmetry" between the electrodes and barrier material, which "are crucial to determining the tunneling conductance." EX1044 at 1. Mathon also cited the tight symmetry between the crystal structures of a thin MgO barrier and Fe electrodes in an MTJ, with "only a small lattice mismatch of about 3.5%." EX1046 at 1. This symmetry permitted high TMRs because "[t]he tunneling resistance for the parallel" electrons was "estimated to be 100 times smaller than that for the antiparallel" electrons "due to the absence of scattering in the barrier." EX1045 at 1; EX1044 at 1 (different tunneling mechanisms facilitated tunneling in the parallel majority channel compared to the antiparallel minority channel); EX1024 ¶72.

Butler's and Mathon's breakthroughs generated considerable excitement for MgO thin-film MTJs. EX1053 at 8041, 8043 nn.9-10 (citing Butler and Mathon); EX1045 at 1, 8 n.3 (citing Butler).

E. Oxygen Vacancy Defects In MgO Thin Films

"One of the most important defects in oxides, if not the most important, is the oxygen vacancy." EX1042 at 162. A metal oxide's properties "are directly or indirectly connected to the presence of defects and in particular of point defects." EX1042 at 161. "Oxygen vacancies are naturally present in every oxide…." EX1042 at 162; *see also id.* ("[P]erfect, defect free, oxides are simply an idealization and do not exist in nature.").

The idealized MgO structure is stoichiometric with a 1:1 ratio of Mg (**blue**) and O atoms (**red**) in its cubic crystalline structure. EX1042 at 162; EX1003 at 6:17-20; EX1057 at 44, Fig. 2.19 (excerpted, annotated). One way to quantify the level of oxygen vacancies in MgO crystal is by describing a sub-stoichiometric composition of MgO_x, where x<1 (x=1 in an idealized, perfectly stoichiometric crystal). EX1041 at 132 ("understoichiometric MgO_x (x < 1)"); EX1003 at 6:57-58 ("[T]here is the

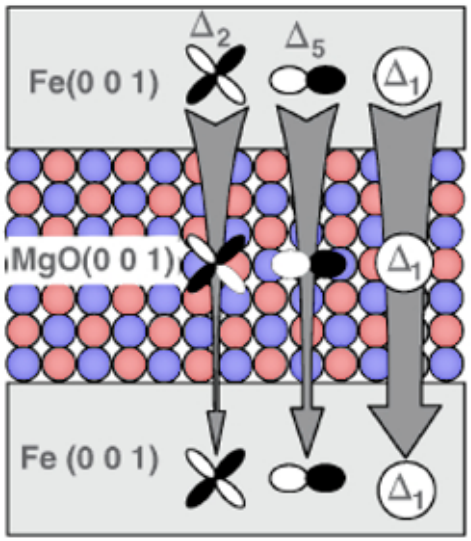

(b)

possibility that there are oxygen vacancy defects such as MgO_x (0.9<x<1).”), 7:5-7; EX1002 (’403 File History) at 168 (Applicant: “MgO_x (0 < x < 1)” and “x is 0<x<1. (Namely, if this is represented as ‘MgO crystals,’ the crystals have oxygen vacancy defects.).”); EX1024 ¶¶73-75.

As shown below, oxygen vacancy defects (shown in **green**) result in a non-stochiometric MgO crystalline structure:

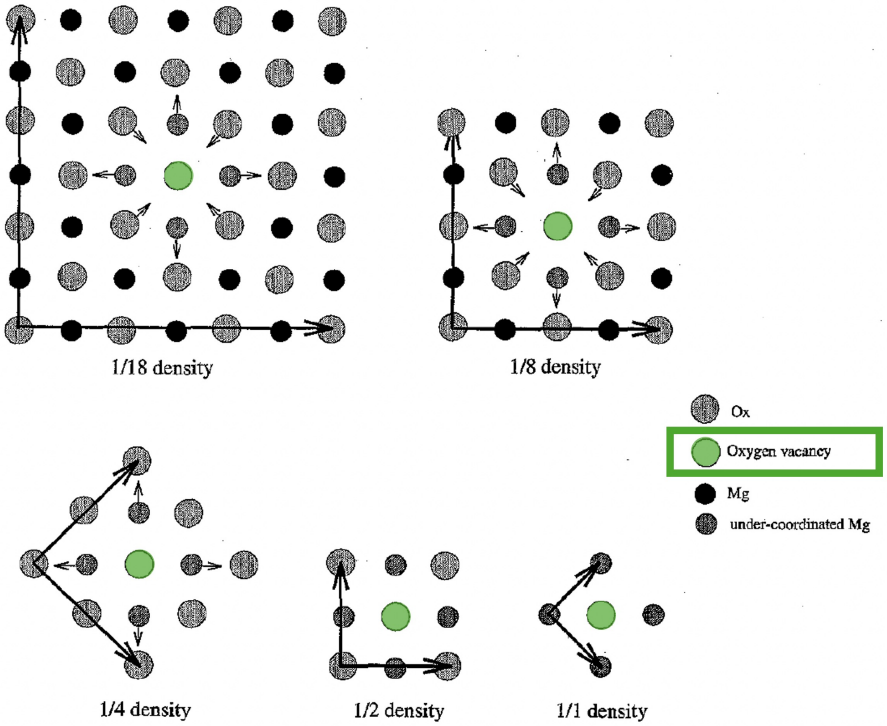

EX1037 at 3, Fig. 1 (annotated); *see also* EX1003 at 6:17-20 (contrasting using “a source with oxygen vacancy defects” instead of “the MgO of the stoichiometric composition (the ratio of Mg to O is 1:1)”).

Researchers understood that oxygen vacancy defects lowered the barrier height of the MgO thin film. Soukup experimentally observed a 0.33 eV barrier height of an MgO thin film, noting that increased oxygen vacancy defects lowered the barrier height of MgO. EX1028 at Abstract, 3232; EX1024 ¶¶76-82. Bowen also observed a lower barrier height of his MgO thin film and hypothesized that it may have resulted from "the presence of stoichiometric and/or thickness inhomogeneities in the insulating film." EX1026 at 1656; *see also* EX1062 at 17:37-39 ("The exact composition of the MgO layer may differ from the stochiometric composition.").

F. The '263 Patent Family

The '263 Patent teaches an MTJ with a single-crystalline or polycrystalline MgO barrier layer sandwiched between two Fe electrodes. *Id.* at Fig. 1(B) (excerpted at right), 1:32-39, 5:25-31; EX1024 ¶¶83-86. The patent purports to claim this MTJ device, specifying that the tunnel barrier layer has a "tunnel barrier height" ϕ "in a range of 0.2 to 0.5 eV." *E.g.*, *id.* at 10:11-12 (Claim 1); *see also* EX1004 at 336 (correcting the "barrier height" symbol from ψ and ω to ϕ).

FIG. 1 (B)

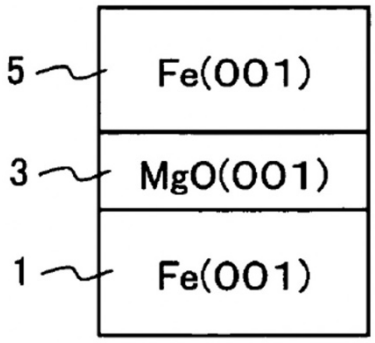

Claim 2 further recites "the first and second ferromagnetic material layers comprises CoFeB alloy." EX1003 at 10:13-15 (Claim 2).

Claims 3 and 4 require obtaining the "tunnel barrier height" ϕ by "fitting J-V characteristics of the tunnel barrier junction structure to" Simmons' formula where the bias voltage is set to "100 mV or smaller," the "effective thickness of the tunnel barrier layer" is "approximately equivalent to (T_{MgO}–0.5nm), and t_{MgO} is an actual thickness of the tunnel barrier layer." *Id.* at 10:16-30.

Claim 4 additionally requires "the first and second ferromagnetic material layers comprises CoFeB alloy." *Id.* at 10:31-33.

G. The Prosecution Of The '263 Patent

The '263 Patent directly descends from, and claims priority to, the '403 Patent. EX1003 at 1, [63], 1:6-15. The '403 Patent originated as PCT application no. PCT/JP2005/004720, filed on March 10, 2005. EX1001 at 1, [22], [86]. The application was transmitted to the U.S. Patent Office on September 8, 2006. *Id.* at 1, [86]. It claims priority to two Japanese priority patent applications, filed on March 12, 2004 and October 28, 2004, respectively. *Id.* at 1, [30]. The October 28, 2004 application included a new Figure 11 and related disclosure of a CoFeB electrode not included in the earlier, March 12, 2004 application. *Compare* EX1020-EX1021, *with* EX1022-EX1023.

Prosecution of the ’263 Patent began with the Examiner’s rejection of all 16 claims under 35 U.S.C. §112, second paragraph as “incomplete for omitting essential steps” and “structural” relationships. EX1004 at 142. In a supplemental response, the applicant canceled claims 1-15, amended original claim 16, and added three new claims 17-19, indicating that its amendments resolved the Section 112 rejection. *Id.* at 170, 172.

The Examiner then issued a second office action rejecting pending claims 16-19 as obvious over U.S. Patent No. 7,726,384 (“Parkin384”) in view of U.S. Patent Application Publication No. 2009/0324814 (“Parkin814”) and U.S. Patent No. 5,759,265 (“Nashimoto265”). EX1004 at 178-81. He determined that the prior art disclosed an MTJ with two CoFeB ferromagnetic layers and a polycrystalline MgO barrier. *Id*. at 180. The Examiner also found that an MgO(100) crystal plane orientation was well known. *Id.*

In response, the applicant canceled claims 16-19 and added new claims 20-22. EX1004 at 213-15. Applicant argued the claims were allowable because Parkin’s CoFeB electrodes “clearly do not have a crystal structure such as a BCC structure.” *Id.* at 217.

The Examiner then rejected claim 22 as obvious over U.S. Patent Application Publication No. 2008/0062581 (“Parkin581”) and U.S. Patent No. 5,514,484 (“Nashimoto484”). *Id.* at 229-31. The Examiner found that Parkin581 disclosed an

"amorphous second ferromagnetic layer 175 comprising a CoFeB alloy." *Id.* at 231. The Examiner also issued a double patenting rejection for pending claims 20-22 as unpatentable over Claims 1 or 4 of the '403 Patent. EX1004 at 232-233.

The applicant canceled pending claim 22 and filed a terminal disclaimer for claims 20-21 (issued Claims 1-2). EX1004 at 247-48, 252-53. The Examiner allowed the claims. *Id.* at 257.

The applicant filed two more requests for continued examination. In the first RCE, applicant amended pending claim 20 (issued Claim 1) and added claims 23-24 (issued Claims 3-4) requiring Simmons' formula. EX1004 at 271-74. The Examiner allowed the claims again. *Id*. at 277.

The applicant filed a second RCE with an Information Disclosure Statement. EX1004 at 312-15. The Examiner allowed the claims again. *Id*. at 317.

H. Soukup (EX1028)

Inspired by Simmons, University of Minnesota researchers R.J. Soukup and D.E. Speliotis published their results on MgO thin films in a 1970 paper. Soukup prepared samples of "Au-MgO-Au thin-film" devices. EX1028 at Abstract, 3229-30. He observed a tunnel barrier height of 0.33 eV for their MgO barrier. EX1028 at Abstract, 3232, Table I; EX1024 ¶¶96-97. Soukup is not cited on the face of the '263 Patent. *See* EX1003 at 2-4.

Soukup also explained the relationship between oxygen vacancy defects and barrier height of the MgO barrier. EX1028 at 3232 (Soukup performed experiments "[i]n order to determine the effect of nonstoichiometry on the device characteristics."); EX1024 ¶98. He found results showing "that admitting oxygen gas during deposition of the MgO film increases the stoichiometry of the film as seen by an increased barrier height." EX1028 at 3232. Because more stoichiometric MgO films have fewer oxygen vacancy defects, Soukup showed that increasing stoichiometry (reducing oxygen vacancy defects) increased the barrier height. EX1028 at 3232; EX1024 ¶98; *supra* §II.E. In other words, higher oxygen vacancy defects lowered the barrier height. *See id*.

I. Bowen (EX1026)

Also following Simmons' trail, in 2001 a consortium of European researchers led by M. Bowen published their findings on "Fe/MgO/FeCo(001)" MTJs in *Applied Physics Letters*. EX1026 at 1655, 1657 n.13 (citing Simmons (1963)). Bowen is listed on the face of the '263 Patent. EX1003 at 2.

Using Butler's and Mathon's calculations showing giant TMR for MgO thin films as a starting point, Bowen grew "FeCo/MgO/Fe epitaxial structures" (shown at right) with "increasingly thin MgO layers" to study their TMR. EX1026 at 1655, 1657 nn.5-6, Fig. 1 (excerpted). Using "good crystal quality MgO films with sharp interfaces," Bowen's tunneling experiments resulted in TMR measurements of 60%. *Id.* at Abstract, 1655-56; EX1024 ¶90. Bowen also noted the likely "presence of stoichiometric and/or thickness inhomogeneities" in the MgO barrier. *Id.* at 1656.

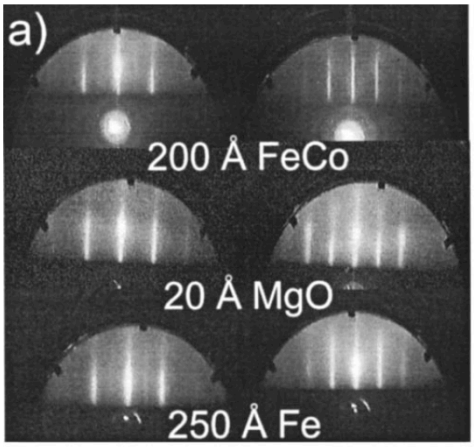

Bowen stated his intent "to confirm the predicted relative increase of the TMR" by Butler in "future experiments." EX1026 at 1657; EX1024 ¶91.

J. Nagahama (EX1027)

Meanwhile, named inventor Dr. Yuasa and his colleagues Taro Nagahama and Yoshishige Suzuki were also working at the National Institute of Advanced Industrial Science and Technology in Tsukuba, Japan. EX1027 at 1, [71-72]. In a 2002 patent application by Nagahama et al., the researchers disclosed an MTJ with an MgO barrier. EX1027 ¶73; EX1024 ¶92. The '263 Patent lists Nagahama. *See* EX1003 at 2.

As shown at right, Nagahama generally disclosed an MTJ structure with a ferromagnetic electrode 4 [**pink**], insulating layer 3 [**green**], and another ultrathin ferromagnetic layer 2 [**purple**] on a substrate underlayer 1 [white]. EX1027 at Abstract, Fig. 3 (excerpted, annotated); EX1024 ¶93.

FIG. 3

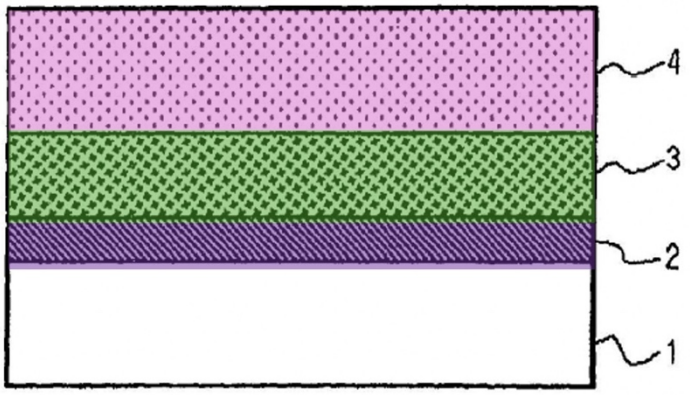

FIG. 17

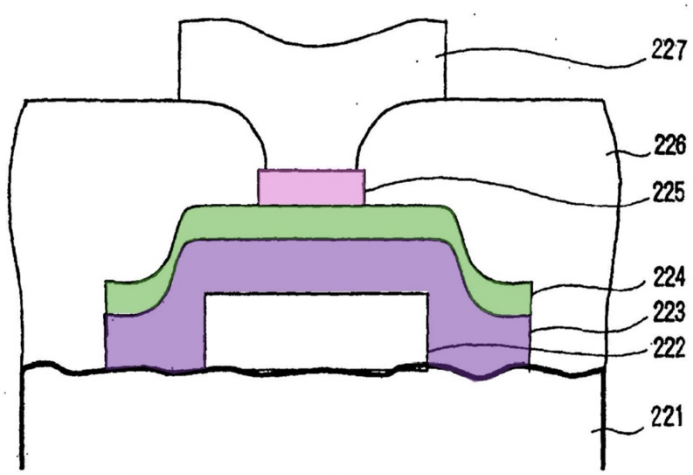

Nagahama also specified a polycrystalline MgO thin-film MTJ (at left) with "a (001)-highly-oriented lower ferromagnetic electrode layer [**purple**], a (001)-highly-oriented MgO barrier layer [**green**], and a (001)-highly-oriented upper ferromagnetic electrode layer [**pink**]." EX1027 ¶¶73, 75-76, Fig. 17 (annotated). The ferromagnetic electrodes used a bcc lattice. *Id.* ¶18 (item [20]). Nagahama taught that its MgO MTJ obtained better results than Bowen (EX1026), EX1027 ¶14,

touting "a larger tunnel magnetoresistive effect of more than 90%," *id.* ¶74; EX1024 ¶94. The application described the "Industrial Applicability" of their invention to "a magnetic sensor of a pickup head of a hard disk drive or a ferromagnetic random access memory." *Id.* ¶82; EX1024 ¶95.

K. Sunai (EX1029/EX1030)

Japanese Patent Application Publication No. JP2002204004A to Sunai et al. was filed by Toshiba in 2000. EX1029 at 1, [22]. A certified English translation of Sunai (EX1029) is submitted as EX1030. *See* 37 C.F.R. §42.63(b). Sunai described an MTJ for a "magnetic memory" device (including MRAM) that was capable of "maintain[ing] a sufficiently high magnetoresistance ratio." EX1030 at Abstract, ¶4; EX1024 ¶¶99-100. The '263 Patent lists Sunai. *See* EX1003 at 2.

Sunai taught a conventional 3-layer MTJ (shown at right) with "a first ferromagnetic layer 3" [**purple**], "a second ferromagnetic layer 4" [**pink**], and "a first tunnel barrier layer 6 [**green**]" between the ferromagnetic layers. EX1030 at Abstract, Fig. 1 (annotated), ¶1; EX1024 ¶101-02.

[Figure 1]

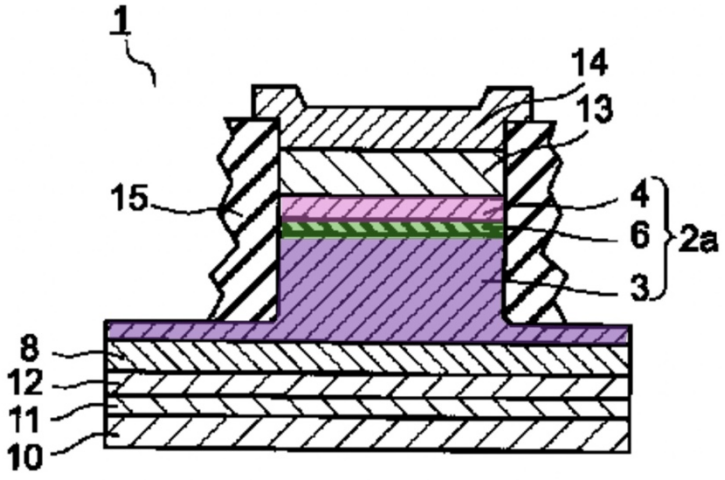

It taught that its MTJ included a CoFeB ferromagnetic layer. EX1030 at Abstract, ¶¶11, 24 ("[T]he composition of the ferromagnetic layer 4 is represented by the general formula $(CoFe)_{100-x}Y_x$" where "Y is at least one element selected from the group consisting of B" and other elements.); EX1024 ¶103.

Sunai's MTJ was a memory element in an MRAM:

[Figure 4]

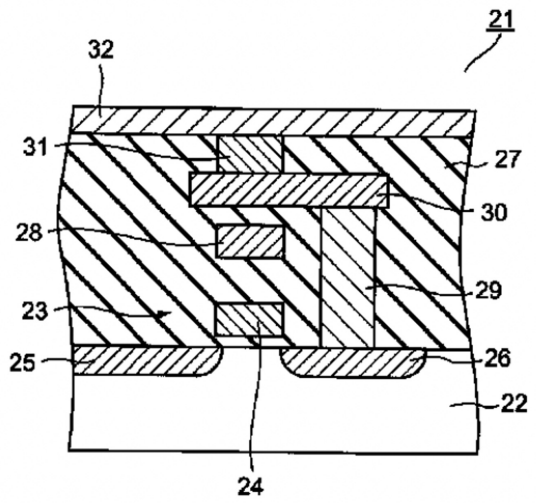

[Figure 5]

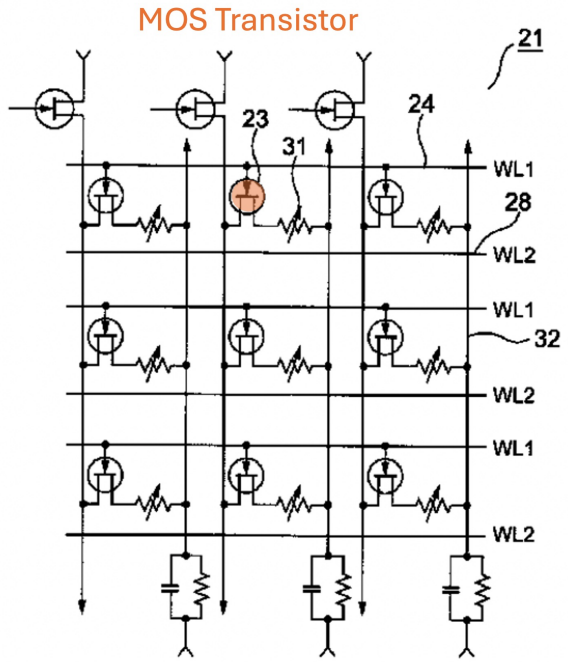

EX1030 ¶¶37-40, Figs. 4-5 (Fig. 5 annotated); EX1024 ¶104. Figures 4 and 5 show a "cross-sectional view" of an MRAM and the "equivalent circuit diagram of the MRAM," respectively. EX1030 ¶38. A transistor (**orange**) and MTJ (or "TMR 31" as Sunai calls it) together form the memory cell in the array. EX1030 ¶42; EX1024 ¶104.

III. CLAIM CONSTRUCTION

Petitioner submits the claim terms should be given their plain and ordinary meaning and no claim construction is necessary to find the claims unpatentable, *see Vivid Techs. v. Am. Sci. & Eng'g*, 200 F.3d 795, 803 (Fed. Cir. 1999), and reserves the right to propose constructions in response to Patent Owner's arguments. EX1024 ¶¶87-88.

IV. STATEMENT OF PRECISE RELIEF REQUESTED FOR EACH CHALLENGED CLAIM (37 C.F.R. §42.104(b)(1)-(2))

A. Grounds Presented

Petitioner requests review and cancellation of Claims 1-4 of the '263 Patent based on the following grounds.

Ground 1: Claims 1 and 3 are rendered obvious over Bowen in view of Soukup (and alternatively further in view of Sunai). Claims 2 and 4 are rendered obvious over Bowen in view of Soukup and Sunai.

Ground 2: Claim 1 is rendered obvious over Nagahama in view of Soukup (and alternatively further in view of Sunai). Claims 2 and 4 are rendered obvious over Nagahama in view of Soukup and Sunai.

B. The Prior Art

1. March 10, 2004 Critical Date For The '263 Patent

The '263 Patent is a pre-AIA patent. Under pre-AIA §102(b), a person is not entitled to a patent if

> the invention was patented or described in a printed publication in this or a foreign country… more than one year prior to the date of the application for patent in the United States.

35 U.S.C. §102(b) (pre-AIA).

Under that section, the effective filing date is the international filing date, not the filing date of any foreign priority documents. *See, e.g.*, MPEP §2139.01 ("[T]he effective filing date of the claimed invention is the actual filing date of the U.S. application" and "the actual U.S. filing date of an application that entered the national stage under 35 U.S.C. 371 is the international filing date."); *id.* ("The effective filing date for claims subject to pre-AIA 35 U.S.C. 102 is not the filing date of the foreign priority document….").

"Under pre-AIA 35 U.S.C. 102(b), the one-year [bar] is measured from the filing date of the earliest application filed in the United States (directly or through the PCT) and not from the dates of earlier filed foreign patent applications." MPEP §2151. The '263 Patent claims priority to the '403 Patent PCT application, PCT/JP2005/04720 filed on March 10, 2005. EX1003 at 1, [63]. Because the international filing date of the '403 Patent is the March 10, 2005 PCT filing date, EX1001 at [22], the critical date for the '263 Patent also is <u>March 10, 2004</u>, *Group One v. Hallmark Cards*, 254 F.3d 1041, 1044-45 (Fed. Cir. 2001) ("[T]he United States filing date, for §102(b) purposes, of a patent application filed under the PCT

in which the United States is designated, is the date of the PCT application—in this case, November 12, 1992. Thus, the 'critical date' is November 12, 1991.").

2. Prior Art Status

Bowen, Nagahama, Soukup, and Sunai are all prior art under at least pre-AIA 35 U.S.C. §102(a) and (b) because they were each published before the March 10, 2004 critical date for the '263 Patent:

- Bowen is a printed publication published on September 10, 2001. EX1026 at 1655.
- Nagahama is a European patent application published on February 25, 2004. EX1027 at [43].
- Soukup is a printed publication published on July 1, 1970. EX1028 at cover, 3229.
- Sunai is a Japanese patent application published on July 19, 2002. EX1030 at [43].

U.S. Patent No. 7,270,896 to Parkin was filed on July 2, 2004. EX1062 at [22]. Parkin is prior art under pre-AIA 35 U.S.C. §102(a) and (e) because it was filed before the earliest possible filing date and before the purported invention of the subject matter of the '263 Patent. The '263 Patent Claims 2 and 4 require a ferromagnetic layer comprising Fe, Co, and B. EX1003 at 10:13-15, 10:31-33. There is no disclosure of a CoFeB layer in the March 12, 2004 Japanese application

(JP 2004-071186) to which the ’263 Patent claims priority. EX1003 at [30]. The earliest disclosure of CoFeB is the October 28, 2004 Japanese application (JP 2004-313350) to which the ’263 Patent claims priority, rendering Parkin prior art under both Section 102(a) and (e).

V. LEVEL OF ORDINARY SKILL IN THE ART

One of ordinary skill in the art as of 2004 would have had

- a Ph.D. in electrical engineering, physics, materials science, or a related field, and at least one year of experience in the research, design, and/or development of magnetic/spintronic devices, or the equivalent, or
- a Master’s degree in electrical engineering, physics, materials science, or a related field, and four years of experience in the research, design, and/or development of magnetic/spintronic devices, or the equivalent.

EX1024 ¶25. Less work experience may be compensated by a higher level of relevant education, and vice versa. *Id.* This level of ordinary skill would be the same if the relevant time period were around the March 12, 2004 or October 28, 2004 Japanese priority applications, or the March 10, 2005 PCT filing date. *Id.* ¶¶24-29.

VI. GROUND 1: CLAIMS 1-4 ARE OBVIOUS OVER BOWEN IN VIEW OF SOUKUP (AND SUNAI)

A. Claim 1

Claim 1 would have been obvious over Bowen in view of Soukup and alternatively Sunai.

1. Claim 1[preamble]: "A magnetoresistive device having a tunnel barrier junction structure, the magnetoresistive device comprising:"

To the extent limiting, Bowen disclosed a magnetoresistive device having a tunnel barrier junction structure as claimed. *E.g.*, EX1026 at Abstract, 1655 (discussing FeCo/MgO/Fe epitaxial structure), Fig. 1; EX1024 ¶¶107-109; *see infra* §§VI.A.2-VI.A.4

The '263 Patent also acknowledges that magnetic tunnel junctions (MTJs) were well known. EX1003 at Figs. 8(A)-8(B), 1:32-56; EX1026 at 1655, Fig. 1; EX1024 ¶¶110-111; *supra* §II.B.

2. Claim 1[a]: "a first ferromagnetic material layer of BCC structure;"

Bowen disclosed a first, Fe ferromagnetic layer as claimed: "FeCo/MgO/Fe epitaxial structures were grown on GaAs(001) in a combined sputtering/laser ablation system…." EX1026 at 1655; *id.* at Abstract, Fig. 1; EX1024 ¶¶112-13.

Iron (Fe) was a well-known ferromagnetic material. EX1030 ¶33 ("ferromagnetic materials" include "Fe, Co, Ni, and alloys containing them"); EX1026 at 1655; EX1024 ¶115.

Bowen taught that the Fe layer is on a first side of the MgO barrier layer. EX1026 at 1655 ("Fe bottom electrode"); *id.* at Abstract, Fig. 1, 1656; EX1024 ¶114. Bowen explained that the "$Fe_{50}Co_{50}$ and ***Fe layers are bcc structured*** with sharp diffraction lines for both azimuths." EX1026 at 1655[2], Fig. 1; EX1024 ¶114.

MTJs with ferromagnetic metal layers were also conventional. EX1003 at 1:35-39 (Description of Related Art); *id*. at Figs. 8(A)-8(B); EX1045 at 1 (describing "Fe/MgO/Fe(001) trilayers"); EX1024 ¶116; *supra* §II.D.1.

Alternatively, one of skill would have found it obvious to replace Bowen's first ferromagnetic material layer (Fe layer) with a CoFeB ferromagnetic layer as taught by Sunai to increase TMR. EX1030 ¶¶28 (teaching CoFeB electrode by adding B to Co_9Fe), 24 (teaching "ferromagnetic layer 4 is represented by the general formula $(CoFe)_{100-x}Y_x$" and specifying Y is an "element selected from the group consisting of B" or other elements); *id.* ¶¶25-29; EX1024 ¶¶117-20. Cobalt and iron were known ferromagnetic materials. EX1030 ¶33; EX1026 at 1655; EX1024 ¶17.

[2] All emphasis added unless otherwise noted.

Bowen sought to increase the TMR in its MgO MTJ, EX1026 at 1655, 1657, and understood that the properties of the MTJ's electrodes contributed to improve the tunneling and hence TMR of its device, EX1026 at 1657; EX1024 ¶120. A skilled artisan knew that using CoFeB electrodes improved TMR. EX1024 ¶121. CoFeB was known to increase TMR compared to CoFe, EX1030 ¶¶27-28 (describing improvements to TMR by adding B to CoFe), and CoFe was known to obtain better results than Fe, EX1035 at 3274; *see also* EX1024 ¶121. Other researchers obtained similar results. *E.g.*, EX1055 at 2269-70 (The "benefit of using CoFeB is multifold" including "a higher TMR value"); EX1056 ¶¶39 (When the "ferromagnetic layer" is "comprised of a CoFeB alloy" it "exhibits a larger TMR ratio."), 78, 103-04, Fig. 7; EX1024 ¶121.

One of skill would have been motivated to replace either or both of Bowen's electrodes with CoFeB to increase TMR. EX1055 at 2270 ("[I]t is natural to replace both the free and pinned layers to CoFeB to further increase the TMR value."); EX1056 ¶¶67-68 ("[B]oth the ferromagnetic layers 5, 7 are made of an FeCoB" to achieve "improvement of the TMR ratio."); EX1035 at 3274 (Fe and "CoFe alloys were tried in this study as both bottom and top electrodes."); EX1024 ¶¶121-23. Such a "combination of familiar elements" is obvious. *KSR v. Teleflex*, 550 U.S. 398, 416 (2007).

One of skill would have looked to Sunai's teachings to improve Bowen's MTJ because both Bowen and Sunai focused on improving the TMR of magnetoresistive devices, a problem to which the '263 Patent was directed. EX1026 at Abstract, 1655; EX1030 at Abstract, ¶¶1, 10; EX1003 at Abstract, 1:20-2:16. Both were directed to improving MRAM memory performance, as was the '263 Patent. EX1026 at 1655; EX1030 at Figs. 4-5, ¶¶1, 4, 37-40; EX1003 at 2:45-47; EX1024 ¶118. Both used ferromagnetic alloy electrodes. EX1026 at Abstract, 1655; EX1030 ¶¶24, 33; EX1024 ¶¶113-15. Because it was known that CoFeB alloys had successfully been used as electrodes for MTJs, one of skill would have found it to be a straightforward, predictable, and desirable improvement to the TMR in Bowen's MTJ. EX1024 ¶123; EX1030 ¶¶24-29; EX1055 at 2269-70; EX1056 ¶¶39, 78.

Additionally, it was known that use of CoFeB adjacent to crystalline MgO produced bcc CoFeB crystalline structures. EX1060 at 310; EX1062 at 18:55-59 (describing the effect of using CoFeB adjacent to MgO crystal structure as the MgO "provides a template for the formation of a thin crystalline ferromagnetic layer which has the bcc structure of CoFe and is oriented in the same (100) direction as the MgO layer."); EX1003 at 4:28-30 (MgO (001), (100), (010) planes are the same); EX1024 ¶122. Thus, substitution of CoFeB for Fe would still produce a bcc CoFeB structure.

3. Claim 1[b]: "a second ferromagnetic material layer of a BCC structure; and"

Bowen further disclosed a second, FeCo ferromagnetic layer, instructing how to grow its "FeCo/MgO/Fe epitaxial structures" with the "FeCo top electrode." EX1026 at 1655; *id.* at Abstract, Fig. 1, 1657; EX1024 ¶¶124-25.

Iron cobalt (FeCo) was a well-known ferromagnetic material. EX1030 ¶33; EX1024 ¶127. The FeCo layer is also bcc structured: "$Fe_{50}Co_{50}$ and Fe layers are ***bcc structured*** with sharp diffraction lines for both azimuths." EX1026 at 1655; EX1024 ¶126. MTJs with ferromagnetic layers were also conventional. EX1003 at 1:35-39, Figs. 8(A)-8(B); EX1045 at 1; EX1024 ¶127; *supra* §II.D.1.

Alternatively, it would have been obvious to replace the FeCo electrode with CoFeB as taught by Sunai for all the reasons provided above regarding Claim 1[a]. EX1024 ¶128; *supra* §VI.A.2.

4. Claim 1[c]: "a tunnel barrier layer located between the first and second ferromagnetic material layers, and wherein the tunnel barrier layer comprises:"

Bowen disclosed an MgO tunnel barrier layer: "We present tunneling experiments on Fe(001)/MgO(20 Å)/FeCo(001) single-crystal epitaxial junctions of high quality grown by sputtering and laser ablation." EX1026 at Abstract; *id*. at 1655 ("[T]he ***MgO barrier*** is grown at 400 °C in order to obtain good crystallinity."), Fig. 1; EX1024 ¶129.

Bowen's tunnel barrier layer was located in between the first and second ferromagnetic material layers. Bowen describes its MTJ as an "Fe(001)/MgO(20 Å)/FeCo(001) single-crystal epitaxial junction[]." EX1026 at Abstract; *see id*. at 1656 (describing "Fe(200 Å)/MgO(20 Å)/FeCo(250 Å) trilayer"). The MgO barrier is located between a "Fe bottom electrode," and a "FeCo top electrode." EX1026 at 1655; EX1024 ¶130.

The '263 Patent acknowledges that a tunnel barrier layer in an MTJ was conventional. EX1003 at 1:35-39 (Description of Related Art); *id*. at Figs. 8(A)-8(B); EX1045 at 8 (describing "high quality… MgO tunnel barrier"); EX1024 ¶131; *supra* §II.B.

5. Claim 1[d]: "a single-crystalline magnesium oxide layer in which (001) crystal plane is preferentially oriented or a poly-crystalline magnesium oxide layer in which (001) crystal plane is preferentially oriented, and"

Bowen alone and/or in view of Sunai taught or suggested this limitation. As explained for Claim 1[c] in this Ground, Bowen disclosed an MgO tunnel barrier layer. *Supra* §VI.A.4; EX1024 ¶¶132-33. Bowen described a single-crystal MgO(001) tunnel barrier layer:

> A test of these models can be performed on ***single-crystal*** epitaxially grown structures… [and] we present experimental results showing large TMR values in Fe(001)/***MgO(001)***/FeCo(001) epitaxial tunnel junctions.

EX1026 at 1655; *id*. at Abstract ("We present tunneling experiments on Fe(001)/***MgO***(20 Å)/FeCo(001) ***single-crystal*** epitaxial junctions of high quality…."); EX1024 ¶133.

Alternately, it would have been obvious to use a polycrystalline MgO with the (001) crystal plane preferentially oriented in place of Bowen's single-crystal MgO barrier. EX1024 ¶¶134-37. Bowen explained that Moodera's 1996 study used "polycrystalline MgO" to obtain the same barrier height of 0.9 eV Bowen obtained. EX1026 at 1656 (citing EX1038); *KSR*, 550 U.S. at 416 ("The combination of familiar elements according to known methods is likely to be obvious when it does no more than yield predictable results."). Like Bowen, one of skill would have understood that substituting polycrystalline MgO for single-crystal MgO would yield desirable and entirely predictable results, such as improved flexibility in substrate selection. EX1026 at 1656; EX1024 ¶¶135-37.

Alternatively, if Sunai's CoFeB electrodes are used as described in Claims 1[a] and 1[b] in this Ground, one of skill would understand that the MgO could be polycrystalline or single crystal but would still have the same (001) orientation. EX1024 ¶¶134-138; EX1062 at 9:58-10:2 (describing use of polycrystalline or single crystal MgO), 18:49-51 ("highly textured (100) MgO tunnel barriers"); EX1003 at 4:28-30 (MgO (001), (100), (010)planes are the same).

6. Claim 1[e]: "wherein the tunnel barrier layer has a tunnel barrier height ϕ in a range of 0.2 to 0.5 eV."

This limitation requires a tunnel barrier height "in a range of 0.2 to 0.5 eV." EX1003 at 10:11-12. As explained, the tunnel barrier height measures the difference between the Fermi level of the electrode and the bottom of the conduction band of the barrier layer. EX1031 at Fig. 1; EX1024 ¶139; *supra* §II.C.

Bowen in view of Soukup taught or suggested a tunnel barrier height for an MgO barrier layer in the claimed range of 0.2 to 0.5 eV. EX1024 ¶¶140-143. Bowen "place[d] the barrier height at ϕ = 0.9 eV" for its MgO barrier device. EX1026 at 1656; EX1024 ¶143. Soukup observed a "barrier height" within the claimed range of "***about 0.33 eV***" for its MgO barrier. EX1028 at Abstract; *id.* at 3231-32, Fig. 5, Table I; EX1024 ¶143.

Soukup taught that oxygen vacancy defects had an impact on the barrier height for MgO. EX1024 ¶144. Soukup suggested a "higher barrier?[] present for the devices fabricated with more oxygen present during MgO deposition, which could mean more stoichiometric oxide films" (e.g., fewer oxygen vacancy defects). EX1028 at 3232, 3236; EX1024 ¶144. In other words, Soukup suggested a higher level of oxygen vacancy defects lowered the barrier height. *See id*. One of skill reading Soukup would understand there was a relationship between oxygen vacancy defects and barrier height. EX1024 ¶144.

One of skill would have been motivated to apply Soukup's teachings about an MgO thin film barrier with a "barrier height" of "about 0.33 eV" to Bowen's MgO barrier. EX1028 at Abstract, 3232, 3236; EX1024 ¶¶145-47. According to the equation for TMR, lowering the resistance (barrier height) for parallel electrons (R_p) would increase TMR. EX1035 at 3273; EX1027 ¶2; EX1057 at 13; EX1003 at 4:50-58; EX1024 ¶145. TMR was an "important parameter" for improving MRAM performance. EX1055 at 2269; EX1024 ¶146. Skilled artisans, including Bowen, had long been interested in increasing TMR to enable better performing MRAM. EX1026 at Abstract, 1655 (Bowen: "experimental results showing large TMR values" for MgO MTJ); EX1055 at 2271; EX1024 ¶146; *supra* §II.B.

Butler and Mathon taught that MgO barriers would achieve higher TMRs due to improved symmetry matching between the MgO barrier and ferromagnetic electrodes, facilitating tunneling of parallel electrons across the barrier compared to antiparallel tunneling. EX1044 at 1; EX1046 at 1 (enhanced tunneling with "only a small lattice mismatch of about 3.5%" between electrodes and barrier); EX1024 ¶146. One of skill in the art looking to increase TMR of an MgO barrier would have been motivated to explore lower barrier heights to facilitate tunneling of parallel electrons. EX1024 ¶147. Thus, one of skill seeking to improve Bowen's MgO MTJ would have looked to Soukup's teachings about MgO barriers and how defects lowered the barrier height. EX1024 ¶147. Indeed, both Bowen and Soukup studied

properties of MgO barriers and were focused on improving tunneling devices, the problem to which the '263 Patent was directed. EX1026 at Abstract, 1655-57; EX1028 at 3229-30; EX1003 at Abstract, 1:25-2:16.

One of skill would have had a reasonable expectation of success in achieving a tunnel barrier height in the claimed range in Bowen's MTJ. EX1024 ¶148. Soukup had already shown an MgO barrier would achieve a height of 0.33 eV, EX1028 at Abstract, and one of skill in the art would have been motivated to achieve Soukup's barrier height in an MgO MTJ to improve tunneling and hence TMR, EX1028 at Abstract, 3232, 3236; EX1024 ¶148. One of skill would have predictably followed the trail blazed by Bowen and Soukup. *Id*.

The claimed tunnel barrier height range of 0.2 to 0.5 eV also would have been obvious. EX1024 ¶¶149-150. One of skill was aware that oxygen vacancy defects impacted the barrier height. Bowen itself hypothesized that the low barrier height they observed, which was "lower than half" of the calculated value for "an ultrathin layer" of MgO, were due to the "presence of stoichiometric… inhomogeneities in the insulating film." EX1026 at 1656; EX1024 ¶148. Soukup observed a relationship between barrier height and MgO stoichiometry (oxygen vacancy defects). EX1028 at 3232, 3236 ("[B]arrier height was a function of the amount of oxygen present… with a higher barrier for larger amounts of oxygen present" and "more stoichiometric" MgO film.). Thus, one of skill would have been motivated

to adjust oxygen vacancy defects to increase TMR by lowering the barrier height as taught by Soukup. EX1024 ¶¶151-55.

Further, the '263 Patent itself states that "[w]hen there are oxygen vacancy defects, the potential barrier height of the MgO tunnel barrier is thought to decrease (such as in the range of… 0.2 to 0.5 eV), which is thought to result in an increase in the tunneling current." EX1003 at 6:59-63. Thus, according to the '263 Patent, the tunnel barrier height limitation is inherent when there are oxygen vacancy defects as disclosed by both Bowen and Soukup. EX1026 at 1656; EX1028 at 3232, 3236. Additionally, in the co-pending litigation, IP Bridge asserted that this limitation is satisfied by the mere "presence of oxygen vacancy defects." EX1065 at 20; *id*. at 22 (citing EX1001 at 6:47-7:2); EX1003 at 6:54-7:9 (same). Thus, this limitation is satisfied. *Spectrum Sols. v. Longhorn Vaccines*, IPR2021-00847, Paper 13 at 23 (P.T.A.B. Nov. 12, 2021) (ordering institution).

This limitation was taught or suggested by Bowen in view of Soukup. IP Bridge's statements in the district court further confirm this limitation is obvious.

B. Claim 2: "The magnetoresistive device according to claim 1, wherein at least one of the first and second ferromagnetic material layers comprises CoFeB alloy."

Claim 2 does not specify any molecular composition or stoichiometry of the claimed CoFeB alloy, and thus any bcc CoFeB alloy satisfies it. EX1003 at 10:13-15; EX1024 ¶¶156-59.

This claim was disclosed or suggested by Bowen in view of Soukup and Sunai for the reasons provided in Claim 1[a]. *Supra* §VI.A.2.

C. Claim 3

Claim 3 would have been obvious over Bowen in view of Soukup and alternatively Sunai.

1. Claim 3[pre]: "The magnetoresistive device according to claim 1,"

Supra Claim 1, §VI.A; EX1024 ¶160.

2. Claim 3[a]: "wherein said tunnel barrier height ψ is obtained by fitting J-V characteristics of the tunnel barrier junction structure to an equation (1) $J=[(2m\phi)^{1/2}/\Delta s](e/h)^2\times\exp[-(4\pi\Delta s/h)\times(2m\phi)^{1/2}]\times V$ (1)"

This limitation is obvious over Bowen in view of Soukup. The equation in Claim 3[a] merely recites Simmons' formula. Claim 3[a] specifies a "tunnel barrier height" with "an equation (1)," EX1003 at 10:20, and the variable symbols were corrected to "tunnel barrier height" ϕ with "$J=[(2m\phi)^{1/2}/\Delta s](e/h)^2\times\exp[-(4\pi\Delta s/h)\times(2m\phi)^{1/2}]\times V$," EX1003 at 20 (Certificate of Correction); EX1024 ¶¶161-62.

"[E]quation (1)" is Simmons' corrected formula from his 1963 paper for calculating tunnel barrier height. *Compare* EX1003 at 10:20 (Claim 3[a]), *with* EX1031 at 1796-97 (Simmons' Equation (25)); EX1059 at 1; EX1003 at 7:10-23, 7:38-48; EX1024 ¶¶163-64. The tunnel barrier height is conventionally determined by fitting the barrier's J-V curves to Simmons' formula. EX1031 at 1796 ("[I]f the

current-voltage characteristic of a tunnel junction is known, the mean barrier height can be determined."); EX1024 ¶¶165-67. IP Bridge agrees. *E.g.*, EX1074 at 5, 14-15 (acknowledging "equation (1)" is "Simmons' formula" for same limitation in '463 Patent).

Bowen taught using Simmons' formula to approximate its tunnel barrier height. He used "I(V) curves [to] place[] the barrier height at ϕ=0.9 eV" at 10 mV for his Fe/MgO/FeCo MTJ. EX1026 at 1656. He compared his measurements with "Simmons' equations" and cited to Simmons' foundational 1963 paper. EX1026 at 1656, 1657 n.13 (citing EX1031); EX1024 ¶168. Soukup recognized "Simmons' model" was used to evaluate the "height and the bias dependence of the insulator potential-energy barrier." EX1028 at 3229; *id.* at 3229, 3236 n.1 (citing EX1031); EX1024 ¶¶169-70.

One of skill would have found it obvious over Bowen and Soukup to use Simmons' formula to calculate the "tunnel barrier height" ϕ.

3. Claim 3[b]: "where J is a tunnel current density flowing through the tunnel barrier layer, V is an applied bias voltage that is 100 mV or smaller, m is a mass of the free electron, e is the elementary electric charge, h is the Planck's constant, Δs is an effective thickness of the tunnel barrier layer that is approximately equivalent to (T_{MgO}−0.5 nm), and t_{MgO} is an actual thickness of the tunnel barrier layer determined using a cross-sectional transmission electron microscope image."

Claim 3[b] specifies the variables, and some values for those variables, to use in Simmons' formula. EX1003 at 10:22-30; EX1024 ¶171. These variables, and the recited values, are all obvious over Bowen.

The '263 Patent uses the same variables from Simmons' foundational paper as shown in the table below:

Claim 3[b] limitations [EX1003 at 10:22-30]	Simmons' formula (1963) [EX1031 at 1794]
"J is a tunnel current density"	"J=tunnel current density"
"V is an applied bias voltage"	"V=voltage across film"
"m is a mass of the free electron"	"m=mass of electron"
"e is the elementary electric charge"	"e=charge of electron"
"h is the Planck's constant"	"h=Planck's constant"
"Δs is an effective thickness of the tunnel barrier layer"	"$\Delta s=s_2-s_1$"

Compare EX1003 at 10:22-30, *with* EX1031 at 1794 (defining variables); EX1024 ¶173.

Calculating a barrier height using Simmons' formula with Simmons' variables would have been obvious. EX1024 ¶¶174-80. Indeed, Simmons' 1963 paper told

one of skill how to calculate barrier height in exactly this manner. EX1031 at 1794-97; EX1024 ¶172. As explained for Claim 3[a], both Bowen and Soukup observed Simmons' formula was used to calculate barrier height. *Supra* §VI.C.2; EX1024 ¶171.

None of the requirements of Claim 3[b] are inventive:

Claim 3[b] recites that "J is a tunnel current density flowing through the tunnel barrier layer." EX1003 at 10:22-23. One of skill would understand the '263 Patent is restating Simmons' variable: "J=tunnel current density." EX1031 at 1794; EX1024 ¶175. Simmons explained that "[t]he purpose of this paper is to derive a single theory for the ***current flow through a generalized barrier***." EX1031 at 1794; EX1024 ¶175.

Claim 3[b] further recites: "V is an applied bias voltage that is 100 mV or smaller." EX1003 at 10:23-24. Applying a low voltage of under 100 mV would have been obvious. Indeed, Simmons provided the equation (25) recited in Claim 3[a] for a "Low-Voltage Range: V≃0" for "low voltages." EX1031 at 1797; EX1024 ¶176. "100 mV or smaller" is a low voltage. EX1024 ¶176.

Applying a bias voltage "100 mV or smaller" across a junction further is obvious over Bowen. EX1024 ¶¶176-77. Bowen measured the barrier height in the claimed range "at 10 mV." EX1026 at 1656. As shown in Figure 3, Bowen also

applied various bias voltages to its MTJ, including spanning 0 to 100 mV, finding the highest TMR "value of 60% at 10 mV." EX1026 at Fig. 3, 1657; EX1024 ¶176.

This limitation also requires: "Δs is an effective thickness of the tunnel barrier layer that is approximately equivalent to (T_{MgO}−0.5 nm)." EX1003 at 10:26-28. One of skill would understand that Simmons' Δs variable is an "effective thickness"; he defined it as "$\Delta s = s_2 - s_1$" where "s_1, s_2=limits of barrier at Fermi level." EX1031 at 1794; EX1024 ¶178.

Having a tunnel barrier layer with an effective thickness "that is approximately equivalent to (T_{MgO}−0.5 nm)" would have been obvious over Bowen. EX1024 ¶¶179-81. According to Claim 3[b], t_{MgO} is an "actual thickness of the tunnel barrier layer." EX1003 at 10:28-30; *see also* EX1031 at 1794 ("s=thickness of insulating film"); EX1024 ¶178. Bowen taught an effective thickness of the barrier of approximately 0.5 nm less than the actual barrier thickness. He fabricated an Fe/MgO/FeCo MTJ with an MgO barrier of "20 Å" or 2 nm. EX1026 at 1656; EX1024 ¶179. He used Simmons' equations to calculate "a barrier thickness $d \sim 15$ Å," or 1.5 nm, for his MTJ. *Id*. Bowen's effective thickness was approximately 0.5 nm less than the actual thickness: 2 nm actual – 0.5 nm = 1.5 nm effective. *See id*.

Finally, Claim 3[b] requires that "t_{MgO} is an actual thickness of the tunnel barrier layer determined using a cross-sectional transmission electron microscope image." EX1003 at 10:28-30. This limitation is also obvious over Bowen, who

expressly recognized that MgO layer thickness could be measured using "cross section transmission electron microscopy (TEM)":

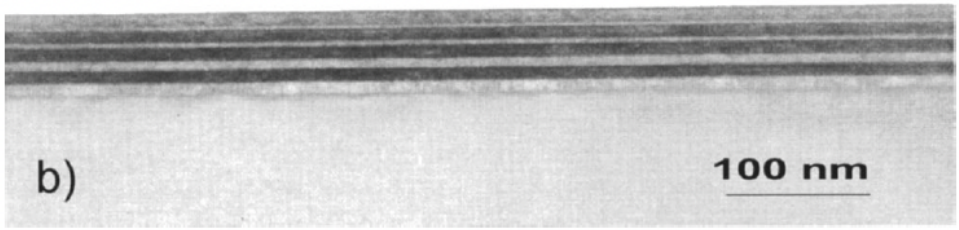

EX1026 at 1655, Fig. 1 (excerpted); EX1024 ¶180.

Applying Simmons' formula from his foundational paper would have been obvious to a skilled artisan, as demonstrated by Simmons and Bowen.

D. Claim 4: "The magnetoresistive device according to claim 3, wherein at least one of the first and second ferromagnetic material layers comprises CoFeB alloy."

Claim 4 also does not specify any molecular composition or stoichiometry of the claimed CoFeB alloy, and thus any bcc CoFeB alloy satisfies it. EX1003 at 10:31-33; EX1024 ¶¶182-85.

This claim was disclosed or suggested by Bowen in view of Soukup and Sunai for the reasons provided in Claims 1[a] and 3 of this Ground. *Supra* §§VI.A.2, VI.C.

VII. GROUND 2: CLAIMS 1-4 ARE OBVIOUS OVER NAGAHAMA IN VIEW OF SOUKUP (AND SUNAI)

Nagahama disclosed a series of MTJ embodiments focused on a basic structure of a ferromagnetic layer on top of an insulating layer on top of an ultrathin ferromagnetic layer on top of an underlayer. *E.g.*, EX1027 at 10 (claim 1), ¶¶73-74

(describing same arrangement with MgO barrier layer). Additionally, Nagahama disclosed that "[t]he present invention relates to… a tunnel magnetoresistive element whose crystal orientation is set to the (001) direction of a body-centered cubic lattice, a face-centered cubic lattice, or a tetragonal lattice." *Id.* ¶1; EX1024 ¶94. It would have been obvious to a skilled artisan to use Nagahama's teachings regarding MTJs to form a single structure satisfying Claim 1 as discussed below.

A. Claim 1

Claim 1 would have been obvious over Nagahama in view of Soukup and alternatively Sunai.

1. Claim 1[preamble]: "A magnetoresistive device having a tunnel barrier junction structure, the magnetoresistive device comprising:"

To the extent limiting, Nagahama taught a "tunnel magnetoresistive elements" having a tunnel barrier junction structure as claimed. EX1027 ¶¶73-75, Abstract, Claim 1; EX1024 ¶¶187-89; *infra* §VII.A. As explained in Ground 1, MTJs were well known in the art. EX1024 ¶190-91; *supra* §§II.B, VI.A.4.

2. Claim 1[a]: "a first ferromagnetic material layer of BCC structure;"

This limitation was taught or suggested by Nagahama. EX1024 ¶¶192-98.

The "ferromagnetic material layer" refers to an "electrode made of a ferromagnetic metal." EX1003 at 1:35-39, Fig. 8(a); EX1024 ¶195; *supra* §II.B. The "tunnel barrier" layer refers to "an oxide [that] is sandwiched between a first

and a second electrode made of a ferromagnetic metal." EX1003 at 1:35-39. "First" refers to the "lower" ferromagnetic electrode that is closest to the substrate, and "second" refers to the "upper" ferromagnetic electrode. EX1003 at Abstract; EX1024 ¶195.

Nagahama disclosed "a (001)-highly-oriented ***lower*** ferromagnetic electrode layer, a (001)-highly-oriented MgO barrier layer, and a (001)-highly-oriented ***upper*** ferromagnetic electrode layer on the MgO double underlayer of the present invention." EX1027 ¶73; EX1024 ¶194. Such an arrangement is depicted in Figures 3 and 17 as well. EX1027 ¶¶21-22, 75-76; EX1024 ¶196. In Figures 3 and 17, 1 and 222 represent a substrate (or underlayer); 2 and 223 represent a **lower ferromagnetic electrode**"; 3 and 224 represent a **barrier layer**; and 4 and 225 represent an upper ferromagnetic layer. EX1027 ¶¶21-22, 75-76; EX1024 ¶196.

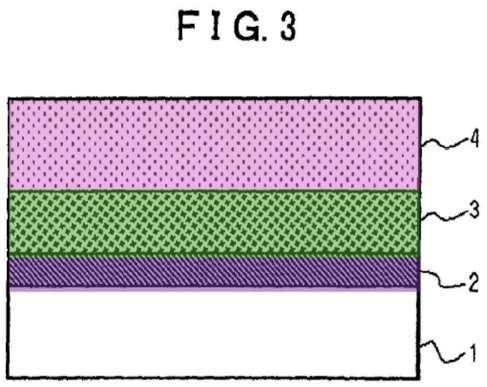

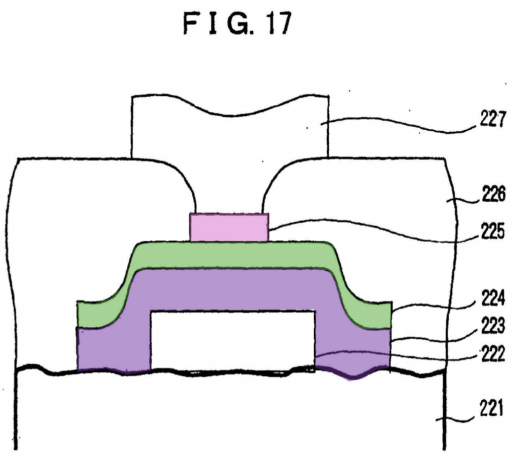

EX1027 at Figs. 3, 17 (Fig. 3 excerpted, both annotated).

Nagahama taught that its "**lower ferromagnetic electrode**" of its "high-quality tunnel magnetoresistive element" was the "first ferromagnetic layer" and its "upper ferromagnetic electrode" was the "second ferromagnetic layer." EX1027 ¶¶75-76, Fig. 17; *see also id.* ¶22, Fig. 3 (describing the same relationships); EX1024 ¶196. Nagahama discloses various examples of this "lower ferromagnetic electrode" material, including Fe, Co, Ni, or an alloy of these metals. *E.g.*, EX1027 ¶¶28, 31, 61, 68, Fig. 17 (reference numeral 223).

Nagahama explained that its MTJ used "a ferromagnetic electrode layer… oriented in the (001) direction of a ***body-centered cubic lattice***, a face-centered cubic lattice, or a tetragonal lattice." EX1027 ¶18 (item [20]); *id.* ¶¶1, 23; EX1024 ¶197. To the extent IP Bridge asserts that this disclosure does not apply to the paragraphs 73-74 embodiment, it would have been obvious to a skilled artisan to generate these ferromagnetic layers in bcc structure with a reasonable likelihood of success because Nagahama itself taught that bcc structure was desirable to achieve "a large magnetoresistive effect." EX1027 ¶¶18 (item [20]), 81 (item [F]); *id.* at 11 (claim 20).

Alternatively, one of skill would have found it obvious to replace Nagahama's lower ferromagnetic electrode material with CoFeB as taught by Sunai. EX1030 ¶¶25-29; EX1024 ¶¶192, 199-205.

One of skill would have been motivated to substitute Sunai's CoFeB electrode for Nagahama's lower electrode (made of Fe, Co, Ni or combinations thereof) to increase the TMR of Nagahama's MTJ. EX1024 ¶201. Nagahama sought to "obtain a high magnetoresistive effect" in its MgO MTJ, EX1027 ¶6, and understood that the properties of the ferromagnetic electrodes impacted TMR, EX1027 ¶23; EX1024 ¶201. As explained for Claim 1[a] in Ground 1, a skilled artisan knew that using CoFeB electrodes improved TMR. *Supra* §VI.A.2; EX1030 ¶27; EX1035 at 3274; EX1055 at 2269-70; EX1056 ¶¶39, 78; EX1024 ¶¶199-200.

One of skill would have been motivated to replace either or both of Nagahama's upper and lower electrodes with CoFeB to increase TMR. EX1055 at 2270 ("[I]t is natural to replace both the free and pinned layers to CoFeB to further increase the TMR value."); EX1056 ¶¶67-68; EX1035 at 3274; EX1024 ¶201. Such a "combination of familiar elements" is obvious. *KSR*, 550 U.S. at 416.

One of skill would have looked to Sunai's teachings to improve Nagahama's MTJ. EX1024 ¶202. Both Nagahama and Sunai focused on improving the TMR of magnetoresistive devices, a problem to which the '263 Patent was directed. EX1027 ¶¶6, 15; EX1030 at Abstract, ¶¶1, 10; EX1003 at Abstract, 1:20-2:16. Both were directed to improving MRAM memory performance, as was the '263 Patent. EX1027 ¶¶3, 49; EX1030 at Figs. 4-5, ¶¶1, 4, 37-40; EX1003 at 2:45-47; EX1024 ¶202. Both used the same MgO barrier layer and similar ferromagnetic alloy

electrodes. EX1027 ¶¶ 6, 73; EX1030 ¶¶24, 33; EX1024 ¶202. Because it was known that CoFeB alloy electrodes had been successfully used as electrodes for MTJs, one of skill would have found it to be a straightforward, predictable, and desirable improvement to Nagahama's MTJ. EX1024 ¶203; EX1030 ¶¶24-29; EX1055 at 2269-70; EX1056 ¶¶39, 78.

Despite replacing the material as recommended by Sunai, one of skill would have heeded Nagahama's recommendation that the electrode material layer portions of its tunnel magnetoresistive element remain "set to the (001) direction of a ***body-centered cubic lattice***" as taught by Nagahama. EX1027 ¶¶1, 11 (claim 20: "by using the underlayer so that a ferromagnetic electrode layer is oriented in the (001) direction of a ***body-centered cubic lattice***, … and using a (001)-highly-oriented MgO layer as a barrier layer, a large magnetoresistive effect is produced."); EX1060 at 310; EX1062 at 18:55-59 (MgO barrier provides template for bcc CoFeB electrode); EX1024 ¶204.

3. Claim 1[b]: "a second ferromagnetic material layer of a BCC structure; and"

As explained above for Claim 1[a], Nagahama's upper ferromagnetic electrode satisfies this limitation. *Supra* §VII.A.2. Nagahama taught and depicted element "225, an **upper ferromagnetic electrode**" formed on a second side of

tunnel barrier layer 224 as the claimed "second ferromagnetic material layer," as shown annotated below.

FIG. 17

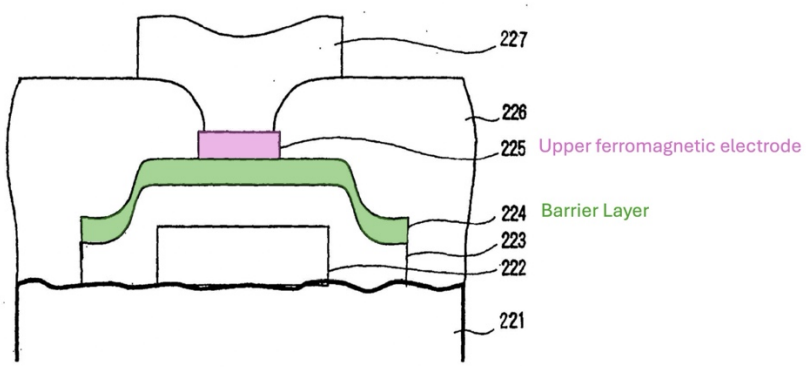

EX1027 ¶76; *id.* at Abstract, ¶¶21-22, Figs. 3, 17; EX1024 ¶¶206-09. Nagahama further taught that its MTJ "includes a (001)-highly-oriented upper ferromagnetic electrode layer." EX1027 ¶73.

Nagahama explained that its second ferromagnetic layer was likewise used "a ***body-centered cubic lattice***," EX1027 ¶18 (item [20]); *id.* ¶¶1, 23; EX1024 ¶209, or it would have been obvious for the same reasons explained in Claim 1[a]. EX1027 ¶1; EX1024 ¶207; *supra* §VII.A.2.

Alternatively, it would have been obvious to replace the Nagahama's upper ferromagnetic electrode with CoFeB as taught by Sunai for all the reasons provided above regarding Claim 1[a]. EX1024 ¶210; *supra* §VII.A.2.

4. Claim 1[c]: "a tunnel barrier layer located between the first and second ferromagnetic material layers, and wherein the tunnel barrier layer comprises:"

Nagahama taught this limitation. Its paragraphs 73-74 embodiment described a "tunnel magnetoresistive element" including "a (001)-highly-oriented MgO barrier layer." EX1027 ¶¶73-74. Such an arrangement is depicted in Figures 3 and 17 as well. EX1027 ¶¶21-22, 75-76; EX1024 ¶211. In Figures 3 and 17, 1 and 222 represent a substrate (or underlayer); 2 and 223 represent a lower ferromagnetic layer; 3 and 224 represent a **barrier layer**; and 4 and 225 represent an upper ferromagnetic layer. EX1027 ¶¶21-22, 75-76; EX1024 ¶212.

FIG. 3

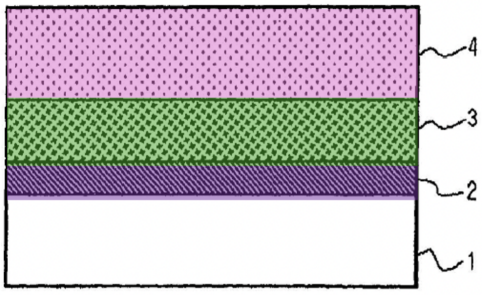

FIG. 17

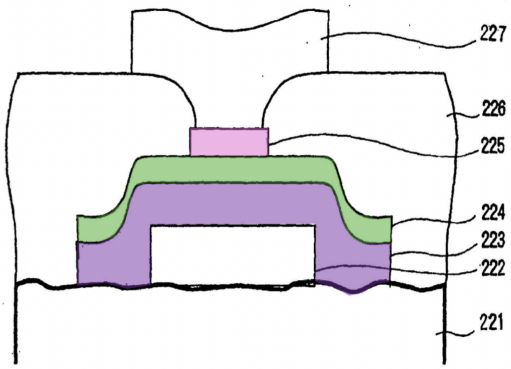

EX1027 at Figs. 3, 17 (Fig. 3 excerpted, both annotated).

Nagahama taught that its "**lower ferromagnetic electrode**" of its "high-quality tunnel magnetoresistive element" was the "first ferromagnetic layer" and its "**upper ferromagnetic electrode**" was the "second ferromagnetic layer." EX1027 ¶¶75-76, Fig. 17; *see also id.* ¶22, Fig. 3 (describing the same relationships); EX1024

¶¶195, 212. Specifically, Nagahama taught that its "lower ferromagnetic electrode" 223 was disposed over a substrate comprising "a MgO double underlayer" 222 over a "lower electrical wire" 221. EX1027 ¶¶75-77, Fig. 17; *see also id.* ¶¶21-22, Fig. 3 (describing Fig. 3 embodiment as including "a nonmagnetic metal film or an antiferromagnetic metal film" substrate). Nagahama's multiple embodiments describing the same basic structure confirm its teachings to a skilled artisan. EX1024 ¶213.

In the example of paragraphs 73-74, Nagahama taught that its "(001)-highly-oriented ***upper*** ferromagnetic electrode layer" was disposed over its "(001)-highly-oriented MgO barrier layer," and this highly-oriented MgO barrier was disposed over the "(001)-highly-oriented ***lower*** ferromagnetic electrode layer." EX1027 ¶¶73-74; *see also id.* ¶¶21-22, Fig. 3 (describing same arrangement for Fig. 3), ¶¶75-76, Fig. 17 (describing same arrangement for Fig. 17); EX1024 ¶211. Consequently, Nagahama also disclosed an MTJ with a tunnel barrier that was disposed between first and second ferromagnetic material layers.

5. Claim 1[d]: "a single-crystalline magnesium oxide layer in which (001) crystal plane is preferentially oriented or a poly-crystalline magnesium oxide layer in which (001) crystal plane is preferentially oriented, and"

Nagahama taught this limitation. As explained for Claim 1[c] in this Ground, Nagahama disclosed the claimed tunnel barrier layer. *Supra* §VII.A.4; EX1024 ¶214.

Nagahama taught a polycrystalline MgO(001) tunnel barrier layer in its magnetoresistive element: "a (001)-highly-oriented MgO barrier layer." EX1027 ¶73; EX1024 ¶215. Because single-crystal layers have the same orientation throughout the crystalline lattice, "highly-oriented" is a term that describes the predominant orientation of a polycrystalline layer containing many crystals. EX1024 ¶215; EX1057 at 46 ("highly oriented polycrystalline"). Nagahama describing its tunnel barrier layer as "a (001)-highly-oriented MgO barrier layer," EX1027 ¶73, confirms its MgO barrier was polycrystalline and preferentially oriented in the (001) plane, EX1024 ¶215.

As explained in Ground 1, an MTJ with a tunnel barrier layer was conventional. EX1024 ¶131; *supra* §§VI.A.4,II.B.

6. Claim 1[e]: "wherein the tunnel barrier layer has a tunnel barrier height ϕ in a range of 0.2 to 0.5 eV."

As explained in Ground 1, this limitation requires a tunnel barrier height "in a range of 0.2 to 0.5 eV." EX1003 at 10:11-12; *supra* §§VI.A.6, II.C.

Nagahama in view of Soukup taught or suggested an MgO tunnel barrier height for an MgO barrier layer in the claimed range of 0.2 to 0.5 eV. EX1024 ¶¶216-17. Nagahama taught an MgO MTJ. EX1027 ¶¶73-74, Abstract, Figs. 3, 17. Soukup observed a "barrier height" of "***about 0.33 eV***" for its MgO" barrier. EX1028 at Abstract; *id.* at 3231-32, Fig. 5, Table I; EX1024 ¶217. As explained for Claim 1[e] in Ground 1, one of skill reading Soukup understands there was a relationship between oxygen vacancy defects and barrier height. *Supra* §VI.A.6; EX1024 ¶218.

One of skill would have been motivated to apply Soukup's teachings about an MgO thin film barrier with a "barrier height" of "about 0.33 eV" to Nagahama's MgO barrier. EX1028 at Abstract, 3232, 3236; EX1024 ¶¶219-24. According to the equation for TMR, lowering the resistance (barrier height) for parallel electrons (R_p) would increase TMR. EX1035 at 3273; EX1027 ¶2; EX1003 at 4:50-58; EX1024 ¶220. TMR was an "important parameter" for improving MRAM performance. EX1055 at 2269; EX1024 ¶220. Skilled artisans had long been interested in increasing TMR to enable better performing MRAM. EX1055 at 2271; EX1024 ¶221-24; *supra* §II.B. Nagahama's stated goal was to increase TMR in its MTJ. EX1027 ¶¶15 ("a first object of the present invention is to provide a tunnel magnetoresistive element capable of producing a larger magnetoresistive effect"), 6 (goal of "obtain[ing] a high magnetoresistive effect"), 3-8; EX1024 ¶221.

Nagahama sought to increase TMR by modifying properties of the MgO barrier layer. EX1027 ¶¶15-17. Indeed, Nagahama discussed prior research on increasing TMR in MgO barriers by Mathon, Bowen, and others. EX1027 ¶¶2-14; EX1024 ¶221.

Butler and Mathon established that the symmetry matching between the MgO barrier and ferromagnetic electrodes greatly improved tunneling of parallel electrons across the barrier compared to antiparallel tunneling. EX1044 at 1; EX1046 at 1 (enhanced tunneling with "only a small lattice mismatch of about 3.5%" between electrodes and barrier); EX1024 ¶146. One of skill in the art looking to increase TMR of an MgO barrier would have been motivated to explore lower barrier heights to facilitate tunneling of parallel electrons. EX1024 ¶220. Thus, one of skill seeking to improve Nagahama's MTJ would have looked to Soukup's teachings about MgO barriers and how defects lowered the barrier height. EX1024 ¶225. Indeed, both Nagahama and Soukup studied tunneling and other properties of MgO barriers and were focused on improving tunneling devices, the problem to which the '263 Patent was directed. EX1027 ¶¶2-4, 13-15; EX1028 at 3229-30; EX1003 at Abstract, 1:25-2:7.

One of skill would have had a reasonable expectation of success in achieving a tunnel barrier height in the claimed range in Nagahama's MTJ. EX1024 ¶¶226-28. Soukup had already fabricated an MgO barrier with a barrier height of 0.33 eV,

EX1028 at Abstract, and that the barrier height was varied by adjusting the oxygen vacancy defects in the MgO barrier layer, EX1028 at Abstract, 3232, 3236; EX1024 ¶227. One of skill would have predictably followed this trail. EX1024 ¶228.

For the same reasons explained for Claim 1[e] in Ground 1, the claimed tunnel barrier height range of 0.2 to 0.5 eV also would have been obvious. *Supra* §VI.A.6; EX1028 at 3232, 3236; EX1043 at 1; EX1045 at 7; EX1047 at 510-11; EX1051 at 1; EX1026 at 1656; EX1053 at 8042-43; EX1024 ¶¶229-31.

As explained for Claim 1[e] in Ground 1, the '263 Patent's assertion that this limitation is inherent when there are oxygen vacancy defects and Patent Owner's district court statements that the claim requirement of a 0.2 to 0.5 eV barrier height is satisfied by the mere "presence of oxygen vacancy defects" also show this limitation is obvious. EX1065 at 20; *id.* at 22 (citing EX1001 at 6:47-7:2); EX1003 at 6:54-7:9 (same); *supra* §VI.A.6; *Longhorn Vaccines*, IPR2021-00847, Paper 13 at 23.

B. Claim 2: "The magnetoresistive device according to claim 1, wherein at least one of the first and second ferromagnetic material layers comprises CoFeB alloy."

Claim 2 does not specify any molecular composition or stoichiometry of the claimed CoFeB alloy, and thus any bcc CoFeB alloy satisfies it. EX1003 at 10:13-15; EX1024 ¶¶232-35.

This Claim was disclosed or suggested by Nagahama in view of Soukup and Sunai for all the reasons provided above regarding Claim 1[a]. *Supra* §VII.A.2.

C. Claim 3

Claim 3 would have been obvious over Nagahama in view of Soukup and alternatively Sunai.

1. Claim 3[pre]: "The magnetoresistive device according to claim 1,"

Supra Claim 1[preamble], §VII.A.1; EX1024 ¶236.

2. Claim 3[a]: "wherein said tunnel barrier height ψ is obtained by fitting J-V characteristics of the tunnel barrier junction structure to an equation (1) $J=[(2m\phi)^{1/2}/\Delta s](e/h)^2\times\exp[-(4\pi\Delta s/h)\times(2m\phi)^{1/2}]\times V$ (1)"

This limitation is obvious over Nagahama in view of Sunai and Soukup. EX1024 ¶¶237-43.

Nagahama taught an MgO MTJ. EX1027 ¶¶73-74. Nagahama's stated goal was to increase TMR in its MTJ. EX1027 ¶¶15 ("a first object of the present invention is to provide a tunnel magnetoresistive element capable of producing a larger magnetoresistive effect"), 6 (goal of "obtain[ing] a high magnetoresistive effect"), 3-8; EX1024 ¶¶239-40. Nagahama sought to increase TMR by modifying properties of the MgO barrier layer. EX1027 ¶¶15-17. Indeed, skilled artisans were interested in determining the barrier height

as it was understood that there was a relationship between the barrier height and higher TMR. EX1045 at 4; EX1047 at 510-11; EX1024 ¶241.

Skilled artisans were also aware that Simmons' formula was used to approximate the barrier height of an MTJ. *Supra* Ground 1, Claim 3[a], §§VI.C.2, *see also* §; EX1024 ¶242. Indeed, Soukup recognized "Simmons' model" was used to evaluate the "height and the bias dependence of the insulator potential-energy barrier." EX1028 at 3229, 3236 n.1 (citing EX1031); EX1024 ¶242.

Because those of skill understood that Simmons' formula was the operative equation for calculating barrier height, one of skill would have found it obvious over Nagahama, Sunai, and Soukup to use Simmons' formula to calculate the "tunnel barrier height ϕ."

3. Claim 3[b]: "where J is a tunnel current density flowing through the tunnel barrier layer, V is an applied bias voltage that is 100 mV or smaller, m is a mass of the free electron, e is the elementary electric charge, h is the Planck's constant, Δs is an effective thickness of the tunnel barrier layer that is approximately equivalent to (T_{MgO}−0.5 nm), and t_{MgO} is an actual thickness of the tunnel barrier layer determined using a cross-sectional transmission electron microscope image."

As explained in Ground 1, Claim 3[b] specifies the variables, and some values of those variables, to use in Simmons' formula. *Supra* Ground 1, Claim 3[b], §VI.C.3, *see also* §II.C; EX1024 ¶244. These variables, and the recited values, are all obvious over Nagahama in view of Sunai and Soukup.

A skilled artisan understood the variables in Claim 3[b] based on Simmons' foundational paper (EX1031) and understood how to apply them. *Id.* To the extent that Ground 1's rationale relies on Bowen's application of Simmons' formula, such application would have been within the knowledge of a skilled artisan as expressly referenced by Nagahama: "[A] giant tunnel magnetoresistive effect of more than 60% has been experimentally obtained (M. Bowen et al., Applied Physics Letters, volume 79, number 11 (2001), pages 1655-1657)." EX1027 ¶14. Thus, applying Simmons' formula from his foundational paper would have been obvious, as demonstrated by Nagahama, Sunai, and Soukup as well as the knowledge of a skilled artisan in Simmons and Bowen. EX1024 ¶¶245-46.

D. Claim 4: "The magnetoresistive device according to claim 3, wherein at least one of the first and second ferromagnetic material layers comprises CoFeB alloy."

Claim 4 does not specify any molecular composition or stoichiometry of the claimed CoFeB alloy, and thus any bcc CoFeB alloy satisfies it. EX1003 at 10:31-33; EX1024 ¶¶247-50.

This claim was disclosed or suggested by Nagahama in view of Soukup and Sunai for the reasons provided in Claims 2 and 3. *Supra* §§VII.B, VII.C.

VIII. SECONDARY CONSIDERATIONS

Western Digital is unaware of any relevant secondary considerations of non-obviousness for the '263 Patent. EX1024 ¶251.

IX. DISCRETIONARY DENIAL IS UNWARRANTED HERE

Discretionary denial under either Section 314(a) or 325(d) is inappropriate.

A. *Fintiv* Is No Roadblock To Institution

The *Fintiv* factors do not support denying institution under Section 314(a) here. *See Apple v. Fintiv*, IPR2020-00019, 2020 WL 2126495, at *2 (P.T.A.B. Mar. 20, 2020) (precedential); Director's Interim Procedure for Discretionary Denials in AIA Post-Grant Proceedings with Parallel District Court Litigation (June 21, 2022) ("Guidance Memo").

IP Bridge filed its initial complaint in March 2024, and the 38-month median time to trial in the District of Delaware puts any trial long after the final written decision here. *F5 v. Sunstone Info.*, IPR2022-00483, Paper 13 at 12 (P.T.A.B. Aug. 12, 2022); EX1063; EX1078 at 2; Guidance Memo at 8-9 (median time-to-trial statistics must be considered).

The district court litigation is still in its infancy and progressing slowly. After Western Digital filed a motion to dismiss, IP Bridge asked for an extension and filed a First Amended Complaint on July 8, 2024. EX1077 at 3. Western Digital's renewed motion to dismiss and motion to transfer the case to California are presently pending, and the district court has not set a date for an initial scheduling conference, let alone a trial date. *See* EX1077.

To date, IP Bridge has asserted only a single claim of the '263 Patent in Delaware, EX1067 ¶87, while this Petition challenges all claims, leading to little risk of duplication, *see Precision Planting v. Maschio Gaspardo*, IPR2024-00008, 2024 WL 1283507, at *7 (P.T.A.B. Mar. 26, 2024). This Petition presents a compelling challenge showing all aspects of the claims existed in the prior art, including the aspects of the claims the Examiner found allegedly novel. *Supra* §§VI-VII; Guidance Memo at 4-5. *Fintiv* presents no bar to instituting trial here.

B. Discretionary Denial Under 35 U.S.C. §325(d) Is Unwarranted

Section 325(d) does not support discretionary denial. The Examiner never considered the combinations presented in this Petition. EX1004 at 180, 231, 282-83, 332. The Board has ample reason to conclude, either under part one or two, that *Advanced Bionics* does not apply.

The Board applies a two-part framework to determine whether Section 325(d) bars institution: (1) "whether the same or substantially the same art previously was presented to the Office," and (2) "whether the petitioner has demonstrated that the Office erred in a manner material to the patentability of challenged claims." *Advanced Bionics v. MED-EL Elektromedizinische Geräte*, IPR2019-01469, 2020 WL 740292, at *3 (P.T.A.B. Feb. 13, 2020) (precedential).

Part one supports ordering trial here. In part one of *Advanced Bionics*, the Board considers "the similarities and material differences between the asserted art

and the prior art involved during examination, the cumulative nature of the art, and the overlap of the arguments presented." *BMW of N. Am. v. Stragent*, IPR2021-00419, 2021 WL 3039219, at *5 (P.T.A.B. July 19, 2021) (citing *Advanced Bionics*, 2020 WL 740292, at *4).

The same Examiner handled prosecution of both the '263 and '403 Patents. EX1001 at 1 ("*Primary Examiner*—Alonzo Chambliss"); EX1003 at 1 (same). The Examiner found Claims 1 and 2 not patentably distinct over Claim 1 of the '403 Patent. EX1004 at 232. The Examiner did not consider the prior art combinations presented in this Petition during prosecution of the '403 or '263 Patents. *E.g.*, EX1002 at 199-202, 233-36; EX1004 at 180, 230-31, 282-83, 332.

Claim 1 of the '403 Patent and all claims of the '263 Patent require a tunnel barrier height of 0.2 to 0.5 eV. EX1003 at 9:34-10:33; EX1001 at 9:38-42. During prosecution of the '403 Patent, the Examiner believed that the claimed barrier height of 0.2 to 0.5 eV was inventive, EX1002 at 235, and applicant never informed him otherwise, *see* EX1002 at 254-60; EX1028 at Abstract (Soukup: barrier height of 0.33 eV). And the applicant never corrected the Examiner during prosecution of the '263 Patent either. *See generally* EX1004. Nor was the Examiner informed of Patent Owner's position that the "the presence of oxygen vacancy defects indicates a tunnel barrier height as claimed." EX1064 at 19 ('403 Patent infringement allegations);

EX1065 at 20 ('263 Patent infringement allegations); EX1002 at 251-60; *see* EX1004.

The Examiner did not have the benefit of Soukup during examination of the '263 or '403 Patent applications, the combinations of prior art presented here,[3] or Patent Owner's positions on barrier height, all of which render obvious the claimed tunnel barrier height limitation in a range of 0.2 to 0.5 eV required by Claims 1-4 of the '263 Patent. *See generally* EX1004; *supra* §§VI.A, VII.A. This Petition presents new information that the Examiner did not have the opportunity to consider during his initial examination. The grounds in this Petition were not "previously presented" to the Patent Office and trial is warranted here. *See, e.g.*, *Lifecore Fitness, LLC v. Woodway USA, Inc.*, IPR2024-00083, Paper 13 at 22 (P.T.A.B. May 17, 2024) (refusing to deny institution under step one of *Advanced Bionics* even though some of the references were cited on the face of the patent because of Petitioner's reliance on new art that was not previously presented to the PTO); *JUUL Labs. v. NJOY*, IPR2024-00160, 2024 WL 2697567, at *5 (P.T.A.B. May 24, 2024) (*Advanced*

[3] Bowen, Nagahama, and Sunai were listed in an IDS, but never discussed or meaningfully addressed by either applicant or the Examiner. *See generally* EX1003; *supra* §II.G

Bionics part one not met because "mere prior citation of prior art in an IDS will not automatically satisfy the first prong").

Claims 2 and 4 also require "at least one of the first and second ferromagnetic material layers comprises CoFeB alloy." EX1003 at 10:14-15, 10:32-33. The Examiner raised a Parkin reference (No. 2008/0062581) disclosing CoFeB as part of an obvious rejection for then-pending claim 22, EX1004 at 231, which Applicant subsequently canceled, EX1004 at 247. Applicant's actions only demonstrate that CoFeB prior art is material to its claims. *E.g.* EX1004 at 215 (pending claim 22), 237 (rejection), 247-48 (cancellation of claim 22).

Consequently, Claims 1-4 did not overcome rejections based on any of the combinations in this Petition, or potentially cumulative references.

If the Board deems consideration of step two necessary, it also supports instituting trial here. Material error by the Office "may include misapprehending or overlooking specific teachings of the relevant prior art where those teachings impact patentability of the challenged claims." *Advanced Bionics*, 2020 WL 740292, at *3 n.9. Indeed, the Examiner erred in a way that material to patentability.

Allowing Claims 3 and 4 without examination was a material oversight. Claims 3 and 4 are largely recitations of Simmons' formula variables disclosed in his foundational 1963 publication. EX1004 at 282; *supra* §§VI.C,VII.C. The applicant admitted as much when relying on the specification's disclosure of

Simmons' formula and its variables for written description support of Claims 3 and 4. EX1004 at 275 (citing ¶¶50, 52, but omitting ¶51, which recites Simmons' formula); *id.* at 24 (¶51 disclosing Simmons' formula and ¶52 reciting Simmons' formula variables). Simmons' formula, variables, and his foundational 1963 paper were expressly cited in the specification, EX1003 at 7:13-15, 7:44-47, and Simmons and Bowen were listed in an IDS, EX1003 at 2. But the Examiner allowed Claims 3 and 4 without discussion or explanation. EX1004 at 282.

However, the Examiner never rejected Claims 3-4 over the prior art. *See* EX1004; *Amcol Int'l v. Oil-Dri Co.*, IPR2022-01107, Paper 10 at 12 (P.T.A.B. Dec. 5, 2022) (ordering trial where prior art "was not the subject of a rejection, or discussion in any amount of detail by the Examiner"); *ChemtronicsUSA v. Flatfrog Labs.*, IPR2024-00015, 2024 WL 1719468, at *9 (P.T.A.B. Apr. 22, 2024) (ordering trial because "the Examiner did not issue a rejection based on" the Petition's prior art); *K/S HIMPP v. Bragi*, IPR2023-01150, 2024 WL 233688, at *6 (P.T.A.B. Jan. 22, 2024) (ordering trial where a claim added after filing a RCE was allowed without discussion of any of any prior art).

Advanced Bionics does not block the Board from considering the patentability of the '263 Patent based on the prior art presented in this Petition.

X. CONCLUSION

For the reasons set forth above, Western Digital requests judgment cancelling claims 1-4 of U.S. Patent No. 8,319,263.

XI. GROUNDS FOR STANDING

Western Digital hereby certifies that the ’263 Patent is available for IPR and meets the requirements of 37 C.F.R. §42.101.

XII. MANDATORY NOTICES

Pursuant to 37 C.F.R. 42.8(a)(1), the mandatory notices identified in 37 C.F.R. §42.8(b) are provided below as part of this Petition.

A. Real Party-In-Interest (37 C.F.R. §42.8(b)(1))

Petitioner Western Digital Technologies, Inc., and related entity Western Digital Corporation, are the real parties-in-interest.

B. Related Matters (37 C.F.R. §42.8(b)(2))

Petitioner is currently aware of the following matters related to the ’263 Patent: *Godo Kaisha IP Bridge 1 v. Western Digital Technologies, Inc.*, No. 24-cv-00342 (D. Del. Mar. 15, 2024); *Godo Kaisha IP Bridge 1 v. Seagate Technology LLC*, No. 24-cv-00341 (D. Del. Mar. 15, 2024).

C. Lead and Backup Counsel (37 C.F.R. §42.8(b)(3))

Petitioner provides the following designation of counsel:

Lead Counsel	Backup Counsel
Michelle E. Armond (Reg. No. 53,954) michelle.armond@armondwilson.com Postal and Hand-Delivery Address: ARMOND WILSON LLP 4685 MacArthur Court, Suite 390 Newport Beach, CA 92660 Telephone: (949) 932-0778	Douglas R. Wilson (Reg. No. 54,542) doug.wilson@armondwilson.com Postal and Hand-Delivery Address: ARMOND WILSON LLP 13785 Research Blvd., Suite 125 Austin, Texas 78750 Telephone: (512) 267-1663 Josepher Li (Reg. No. 74,998) josepher.li@armondwilson.com Monica Arnold (Reg. No. 77,262) monica.arnold@armondwilson.com Yue Han (Reg. No. 80,950) amy.han@armondwilson.com Postal and Hand-Delivery Address: ARMOND WILSON LLP 4685 MacArthur Court, Suite 390 Newport Beach, CA 92660 Telephone: (949) 932-0778

Pursuant to 37 C.F.R. § 42.10(b), a Power of Attorney accompanies this Petition.

D. Service Information (37 C.F.R. §42.8(b)(4))

Service information for lead and backup counsel is above. Petitioner hereby consents to service by email at the following email address: ipr@armondwilson.com.

ARMOND WILSON LLP

Dated: August 30, 2024

By: /Michelle E. Armond/
Michelle E. Armond (Reg. No. 53,954)
Douglas R. Wilson (Reg. No. 54,542)
Josepher Li (Reg. No. 74,998)
Monica Arnold (Reg. No. 77,262)
Yue Han (Reg. No. 80,950)
Attorneys for Western Digital Technologies, Inc.

CERTIFICATE OF COMPLIANCE

Pursuant to 37 C.F.R. §42.24(d), the undersigned certifies that foregoing **PETITION FOR *INTER PARTES* REVIEW OF U.S. PATENT NO. 8,319,263** exclusive of the parts exempted as provided in 37 C.F.R. § 42.24, contains 12,911 words and therefore complies with the type-volume limitations of 37 C.F.R. § 42.24.

ARMOND WILSON LLP

Dated: August 30, 2024

By: /Michelle E. Armond/
Michelle E. Armond (Reg. No. 53,954)
Douglas R. Wilson (Reg. No. 54,542)
Josepher Li (Reg. No. 74,998)
Monica Arnold (Reg. No. 77,262)
Yue Han (Reg. No. 80,950)
Attorneys for Western Digital Technologies, Inc.

CERTIFICATE OF SERVICE

I hereby certify that a true and correct copy of the foregoing **PETITION FOR *INTER PARTES* REVIEW OF U.S. PATENT NO. 8,319,263** and **EXHIBITS 1001-1079**, are being served on August 30, 2024, via overnight mail on the patent owner at the correspondence address of record for U.S. Patent No. 8,319,263, as addressed below:

Juan Carlos A. Marquez
Marquez Intellectual Property Law Office PLLC
1629 K Street, NW, Suite 300
Washington, DC 20006

A courtesy copy is also being served by electronic mail on counsel for the patent holder in the pending litigation:

Adam W. Poff (apoff@ycst.com)
Robert M. Vrana (rvrana@ycst.com)
Alexis N. Stombaugh (astombaugh@ycst.com)
Michael A. Albert (malbert@wolfgreenfield.com)
Gerald B. Hrycyszyn (ghrycyszyn@wolfgreenfield.com)
Hunter D. Keeton (hkeeton@wolfgreenfield.com)
Aya Cieslak-Tochigi (aya.cieslak-tochigi@wolfgreenfield.com)

ARMOND WILSON LLP

Dated: August 30, 2024

By: /Michelle E. Armond/
Michelle E. Armond (Reg. No. 53,954)
Douglas R. Wilson (Reg. No. 54,542)
Josepher Li (Reg. No. 74,998)
Monica Arnold (Reg. No. 77,262)
Yue Han (Reg. No. 80,950)
Attorneys for Western Digital Technologies, Inc.