InertiaCube^{2} ™
Bringing 3D To Life

Manual for
Serial Port Model

Mullen Industries, LLC - Ex. 1013
Page 1

User Manual for InertiaCube^2
DLL Version 3.07 and higher

Contacting InterSense

Please do not hesitate to contact us for any reason. We are here to help and we value your business.

InterSense Inc.
73 Second Avenue
Burlington, Massachusetts 01803
USA

Telephone: (781) 270-0090 email: info@isense.com
Fax: (781) 229-8995 Internet: www.isense.com

Patents

The label below identifies the protection granted by the Government of the United States to InterSense for its products:

INTERSENSE

U.S. Patents
5645077,
5807284, 6162191 and
Patents Pending

Trademarks

InterSense™, InertiaCube™, InertiaCube^{2TM} SoniDisc™, GEOS™, PULSAR™, CONSTELLATION™ are trademarks of InterSense Inc. All other trademarks are the property of their respective owners.

Copyright ã 2001
InterSense, Inc.

Precautionary Statements

Any changes or modifications to the InertiaCube^2 not expressly approved by InterSense will void the warranty and any regulatory compliance issued for the system.

Do not drop or otherwise shock the tracking devices for they can be permanently damaged.

Do not bend, twist, pull strongly or tamper in any way with any part of the cabling.

Take care to avoid electric shocks. Do not plug-in or unplug the power cable with wet hands.

Please see Appendix C for Health and Safety warnings and guidelines

Mullen Industries, LLC - Ex. 1013
Page 3

Table of Contents

1 THEORY OF OPERATIONS 5

1.1 INERTIACUBE^2™ INTEGRATED INERTIAL INSTRUMENT 5
1.2 3-DOF GYROSCOPIC EARTH-STABILIZED ORIENTATION SENSING (GEOS™) ALGORITHMS 6

2 SPECIFICATIONS AND PERFORMANCE CHARACTERISTICS 8

2.1 PERFORMANCE SPECIFICATIONS 8
2.2 CONNECTION SCHEME 8
2.3 COMPATIBILITY 8

3 SETTING UP YOUR NEW INERTIACUBE^2 9

3.1 INERTIACUBE^2 COMPONENTS 9
3.2 UNPACKING THE INERTIACUBE^2 SENSOR 9
3.3 SOFTWARE 10
3.4 SETTING UP THE HARDWARE 11
3.4.1 InertiaCube^2 placement 11
3.4.2 Computer/Power Connection 12
3.5 TRACKER USE GUIDELINES 13

4 ISDEMO: TESTING THE INERTIACUBE^2 14

4.1 USING ISDEMO 14
4.2 ISDEMO: MAIN WINDOW 16
4.3 FILE OPTIONS 17
4.4 COMMUNICATIONS OPTIONS 18
4.5 PARAMETER OPTIONS 19
4.6 DISPLAY OPTIONS 21
4.7 TOOLS OPTIONS 22

5 DEVELOPER'S INSTRUCTIONS 26

5.1 INTRODUCTION 26
5.2 SAMPLE PROGRAM 26
5.3 USAGE 27
5.4 API 28

6 APPENDIX A - FREQUENTLY ASKED QUESTIONS 33

7 APPENDIX B – TROUBLESHOOTING 34

8 APPENDIX C – HEALTH AND SAFETY WARNINGS AND GUIDELINES 35

9 APPENDIX D - CARE AND MAINTENANCE 37

1 Theory of Operations

Congratulations for buying the finest orientation tracker on the market! This technology offers you several advantages:

- Very low latency
- Unlimited range
- Smooth, jitter-free tracking

The InertiaCube^2 is an inertial 3-DOF (Degree of Freedom) orientation tracking system. It obtains its motion sensing using a miniature solid-state inertial measurement unit, which senses angular rate of rotation, gravity and earth magnetic field along three perpendicular axes. The angular rates are integrated to obtain the orientation (yaw, pitch, and roll) of the sensor. Gravitometer and compass measurements are used to prevent the accumulation of gyroscopic drift.

1.1 InertiaCube^2™ integrated inertial instrument

The InertiaCube^2 is a monolithic part based on micro-electro-mechanical systems (MEMS) technology involving no spinning wheels that might generate noise, inertial forces and mechanical failures. The InertiaCube simultaneously measures 9 physical properties, namely angular rates, linear accelerations, and magnetic field components along all 3 axes. Micro-miniature vibrating elements are employed to measure all the angular rate components and linear accelerations, with integral electronics and solid-state magnetometers. The magnetometers are included for optional yaw drift correction in the sourceless inertial orientation mode only. The geometry and composition of these elements are proprietary, but the functional performance of the multisensor unit can be understood sufficiently by reference to the equivalent diagram in Figure 1.

Figure 2 illustrates the basic physical principal underlying all Coriolis vibratory gyros. Suppose that the tines of the tuning fork are driven by an electrostatic, electromagnetic or piezoelectric drive to oscillate in the plane of the fork. When the whole fork is rotated about its axis, the tines will experience a Coriolis force $\underline{F} = \underline{\omega} \times \underline{v}$ pushing them to vibrate perpendicular to the plane of the fork. The amplitude of this out-of-plane vibration is proportional to the input angular rate, and it is sensed by capacitive or inductive or piezoelectric means to measure the angular rate.

By way of comparison, a conventional inertial measurement unit (IMU) senses 6 of these properties using 6 separate instruments (3 rate gyros and 3 linear accelerometers) each of which by itself would typically be larger, heavier, and more expensive than an InertiaCube. Unlike conventional rate gyro and accelerometer instruments, which must be carefully aligned on a precision machined tri-axial mounting block, the InertiaCube is a monolithic device with its orthogonal outputs factory calibrated to precise alignment. Being a digital device using serial cables, the InertiaCube^2 cabling and connectorization is relatively non-critical, and the cables can be extended to over 100 feet without fear of contaminating sensitive analog signals. The power consumption of the InertiaCube^2 is 100 mA at 6VDC, which makes it suitable for prolonged operation from a small battery in future wireless applications. Figure 3 shows an InertiaCube^2.

Mullen Industries, LLC - Ex. 1013
Page 5

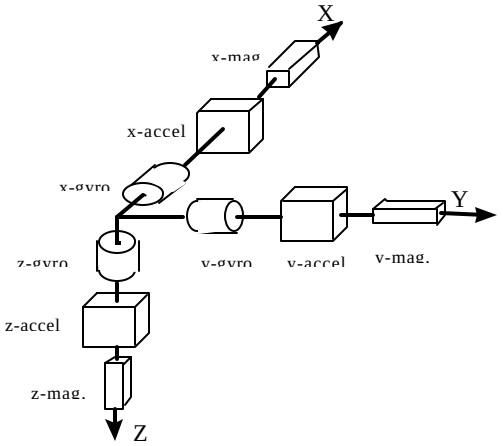

Figure 1: Functional diagram of InertiaCube^2

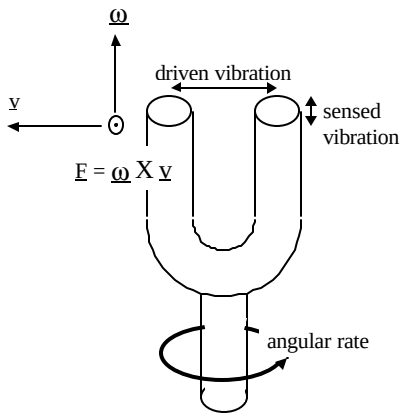

Figure 2: Principle of Coriolis vibratory Gyroscope

Figure 3: InertiaCube^2

1.2 3-DOF Gyroscopic Earth-stabilized Orientation Sensing (GEOS ä) algorithms

Figure 4 shows the processing which is used to compute orientation using this sensor configuration. The basic computation of orientation from gyroscopic angular rates (in the top line of boxes) provides the very rapid dynamic response and high resolution of the system. The accelerometers and magnetometers are used to stabilize the orientation to the earth's gravitational and magnetic fields, thus eliminating the gradual but unbounded accumulation of gyroscopic drift errors. The Kalman filter uses an ever-evolving adaptive algorithm to discard the portion of the accelerometer measurements, which are due to actual motion instead of gravity. This is a very important step, because otherwise horizontal accelerations would result in very large transient pitch and roll errors known as "slosh". The low cost sourceless trackers used in early consumer

HMDs are inclinometer/compass devices, and are thus intrinsically slosh-prone to the point of being uncomfortable to use.

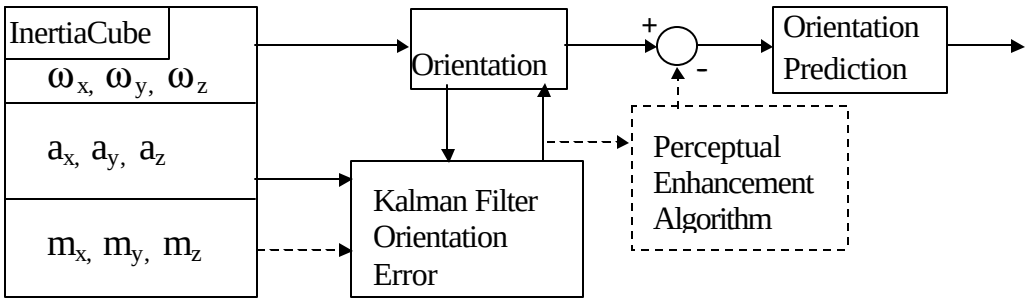

Figure 4: GEOS mode tracking algorithm

In the default operating GEOS mode, the reference frame (hereafter referred to as Navigation frame or Nav frame or N frame) is the locally-level geographic frame with its x-axis pointing north, y-axis east, and z-axis down. The Euler angles reported by the tracker can be described as a sequence of rotations applied to the InertiaCube starting with its body axes initially aligned with the Nav frame axes and resulting in the current orientation. The sequence starts with a rotation by (+yaw) about the Z axis, followed by a rotation by (+pitch) about the new Y axis (i.e. body frame axis), followed by a rotation by (+roll) about the new X axis (i.e. body frame x axis)

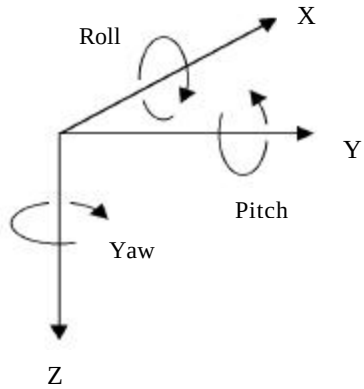

The line from the magnetic field sensor outputs of the InertiaCube to the Kalman filter is a dotted line to indicate that the use of the magnetometers may optionally be disabled. The accelerometer measurements are sufficient to correct all the drift in pitch and roll, and the geomagnetic compassing function is only used to correct drift in yaw. In many fly-through applications absolute yaw referenced to magnetic north is not important and relative yaw tracking is sufficient. This is the case when the user can turn to face an object or rotate the virtual world to bring that object into view. In these situations it may be desirable to turn magnetic yaw compensation off if there are large variations in the direction of magnetic north over the tracking area. With the compassing turned off, the yaw value will drift a few degrees per minute. This drift is too slow to notice while it is happening, but the cumulative yaw error may eventually become noticeable if the user is seated in a fixed chair, and then it may be necessary to apply a Heading Boresight. When yaw compensation mode is disabled, the Nav frame axes are aligned instead to pseudo-north, pseudo-east, and down, where pseudo-north is simply the direction the InertiaCube^2 x-axis was facing on power-up or after application of a Heading Boresight command.

Mullen Industries, LLC - Ex. 1013
Page 7

2 Specifications and Performance Characteristics

2.1 Performance Specifications

Degrees of Freedom:	3 (Yaw, Pitch, and Roll)
Angular Range:	Full 360º - All Axes
Maximum Angular Rate:	1200º per second
Minimum Angular Rate:	3º per second
Static Accuracy:	1º RMS
Dynamic Accuracy:	3º RMS
Update Rate:	180 Hz
Latency:	8 milliseconds
Angular Resolution:	0.05º
O/S Compatibility:	Windows 98/2000/NT
Interface:	RS-232 Serial
Size:	32mm x 29mm x 24mm
Weight:	28 grams (0.98 ounce)
Cable:	3.05 m (10 ft.) cable is provided. This cable is extendable to over 30.5 m (100 ft.) w/ InterSense provided extension cables.
Power:	6 VDC via AC to DC Adapter (included - specify country)
Power Consumption:	100 milliamps

2.2 Connection Scheme

The InertiaCube^2 simply plugs into the RS-232 serial port of a computer. The AC to DC power adapter is plugged into your main power and the 6 VDC power plug connects to the serial port dongle.

2.3 Compatibility

The InterSense InertiaCube^2 is PC compatible with Windows 95, 98, 2000 and XP. Third party software using the standard InterSense DLL is also supported. Please check with third party software providers or InterSense (support@isense.com) about specific software compatibility and support.

3 Setting up your new InertiaCube^2

3.1 InertiaCube^2 Components

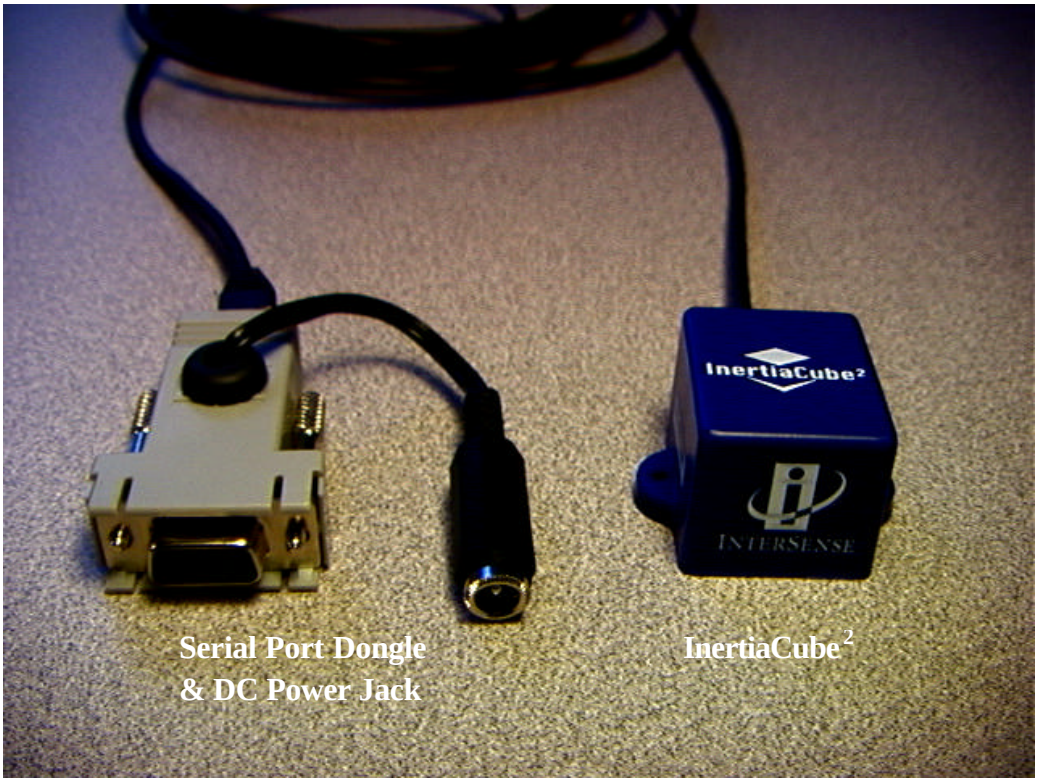

3.2 Unpacking the InertiaCube^2 Sensor

The InertiaCube orientation sensors come with 10-foot cables that plug into the RS-232 serial port of a computer.

NOTE: The InertiaCube sensor is a precision instrument. Care must be taken when handling this device. Most of our customers attach the InertiaCube to devices that are more fragile than the InertiaCube and, hence, require that the whole system must be handled carefully. Although the product can withstand the normal wear and tear experienced by a premium HMD or other device, abrupt actions such as dropping it, or banging it against another object can permanently damage the InertiaCube.

InertiaCube^2 in packaging (Software CD not shown)

3.3 Software

Test software and the DLL Software Development Kit (SDK) delivered with the InertiaCube^2 is provided on CD with the system. Use the auto install tool to extract and install the software.

3.4 Setting up the Hardware

3.4.1 InertiaCube^2 placement

The InertiaCube is typically screwed or bolted to the object it is tracking (use of plastic or aluminum screws is recommended). As best as possible, locate the InertiaCube level to the ground in relation to its actual position during use:

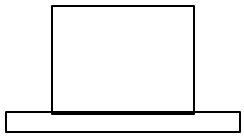

Correct

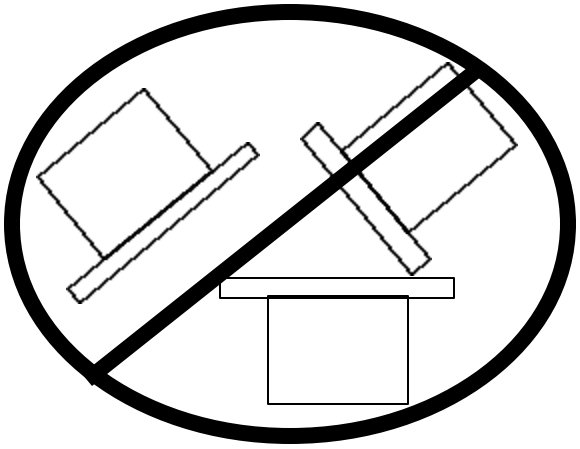

Incorrect

Optimally, you would mount the InertiaCube onto a base plate. In cases of anticipated vibration or physical shock, it is recommended that rubber-mounting pads be used. The mounting holes for the InertiaCube are illustrated below:

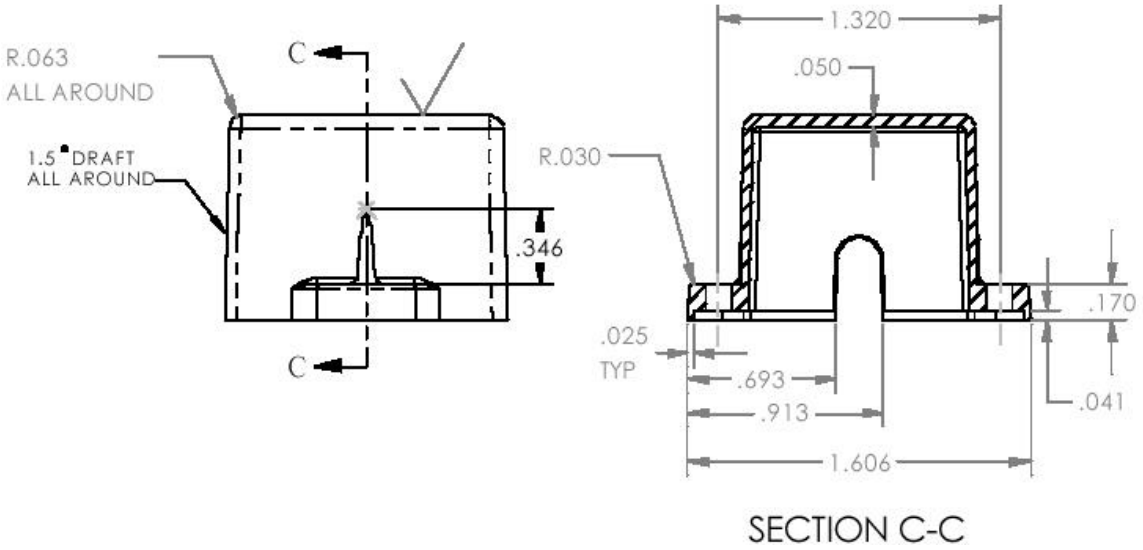

InertiaCube^2 Side View Mounting Holes (dimensions in inches)

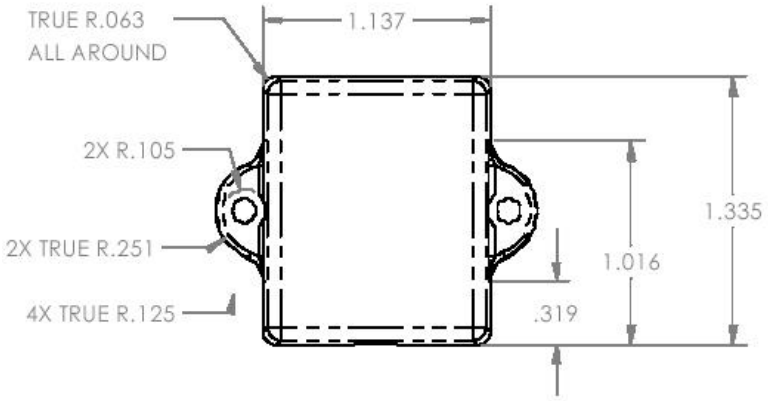

InertiaCube^2 Top View (dimensions in inches)

The InertiaCube^2 comes with a 3.05 m (10') cable attached. This cable plugs into the serial port dongle. The range of the InertiaCube is theoretically unlimited and is only restrained by the length of the cable that attaches it to the computer. A length of 3.05 meter (10 feet) is standard on all orders. Extension cables are available. Contact InterSense to order extension cables.

3.4.2 Computer/Power Connection

The InertiaCube^2 is removed from packaging and plugged into the serial port power dongle as shown below.

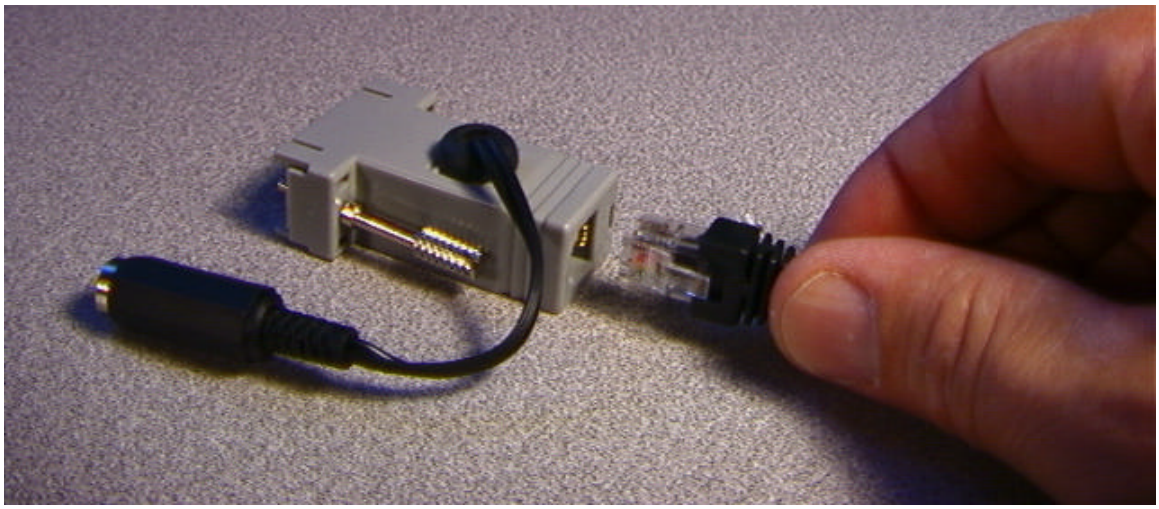

Connection of InertiaCube2 cable to serial port power dongle

Next the AC to DC power converter is connected to wall power and the 6 VDC power jack is plugged into the serial port dongle jack.

Finally, the serial port dongle is connected to your computer. Up to four (4) InertiaCubes can be connected to the PC using COM ports 1 thru 4.

3.5 Tracker Use Guidelines

- Keep the InertiaCube(s) still for the first 10 seconds after starting your application software.
- It is recommended, though not required, that you wait for the InertiaCube to warm up (it achieves optimal performance after warming up for at least 15-20 minutes).
- The InertiaCube is tuned for normal head motion. Avoid shaking/vibration. Remember, this precision instrument uses angular rate sensors, which sense smooth, regular movement very well.

If you keep these guidelines in mind, your InertiaCube^2 will deliver superb performance.

Mullen Industries, LLC - Ex. 1013
Page 13

4 ISDEMO: Testing the InertiaCube^2

ISDEMO is included as a test and diagnostics tool. With it you can test all the features of your tracker.

Software included with your tracking device includes the following:

1)	*isdemo32.exe*	*Win32 version. To be used under Windows95/98 and NT*
2)	*d3dtrax.exe*	*Direct 3D demo program*
3)	*Software SDK*	*See Section 5 for information*
4)	*Jmouse Program*	*Mouse emulator for full screen graphics applications*

ISDEMO provides a convenient graphical interface to validate the communication of the InertiaCube^2 to the PC and test performance through the standard InterSense DLL. See Section 5, Developers Instructions, to learn how to interface the InertiaCube^2 to software applications.

4.1 Using ISDEMO

The first screen you'll see is the hardware selection window (shown below). The program creates a different interface depending on the tracker model selected. Select the *DLL Compatible* option.

Note: You must select DLL Compatible, or ISDEMO will not be able to correctly configure your tracker.

DLL Compatible

DLL compatible trackers include all of InterSense's tracking systems that use software applications programmed to the InterSense API which call functions through the InterSense DLL. Some InterSense trackers, like the InertiaCube^2 & InterTrax LC, are only DLL compatible. The InterSense precision line of trackers (IS-300, IS-600 and IS-900) can interface either directly through a serial port or via the DLL.

IS-300

The IS-300 is a 3-Degree Of Freedom (DOF) tracker. It obtains its primary motion sensing data using a miniature solid-state inertial measurement unit (InertiaCube) which senses angular rate of rotation, gravity and earth components along three perpendicular axes. The angular rates are integrated to obtain the orientation (yaw, pitch, and roll) of the sensor. Gravitometer and compass measurements are used to prevent the accumulation of gyroscopic drift.

IS-600

The IS-600 uses an InertiaCube to sense angular rate of rotation and linear acceleration along three perpendicular axes. The angular rates are integrated to obtain the orientation (yaw, pitch, and roll) of the sensor and the linear accelerations are transformed into a reference coordinate frame and double-integrated to keep track of changes in position (x, y, and z). Ultrasonic time-of-flight distance measurements are used to obtain a starting position and to correct any drift in the inertial position and orientation tracking.

IS-900

The IS-900 is similar to the IS-600, except the roles of the SoniDiscs and ReceiverPods are reversed. Ultrasonic range measurements are made with respect to an array of SoniDiscs. The array is positioned over the required tracking area or on a wall behind the tracker or both. The SoniDiscs are triggered by infrared triggering codes, and they respond by emitting an ultrasonic chirp, which propagates through the air. Three ReceiverPods mounted in the tracker then detect this chirp. The ReceiverPods and associated electronics on the tracker measure the time-of-flight and thereby obtain range measurements from the camera to whatever SoniDiscs are nearby and visible.

Mullen Industries, LLC - Ex. 1013
Page 15

4.2 ISDEMO: Main window

ISDEMO has six primary menus in its main window:

File
Communications
Parameters
Display
Tools
Help

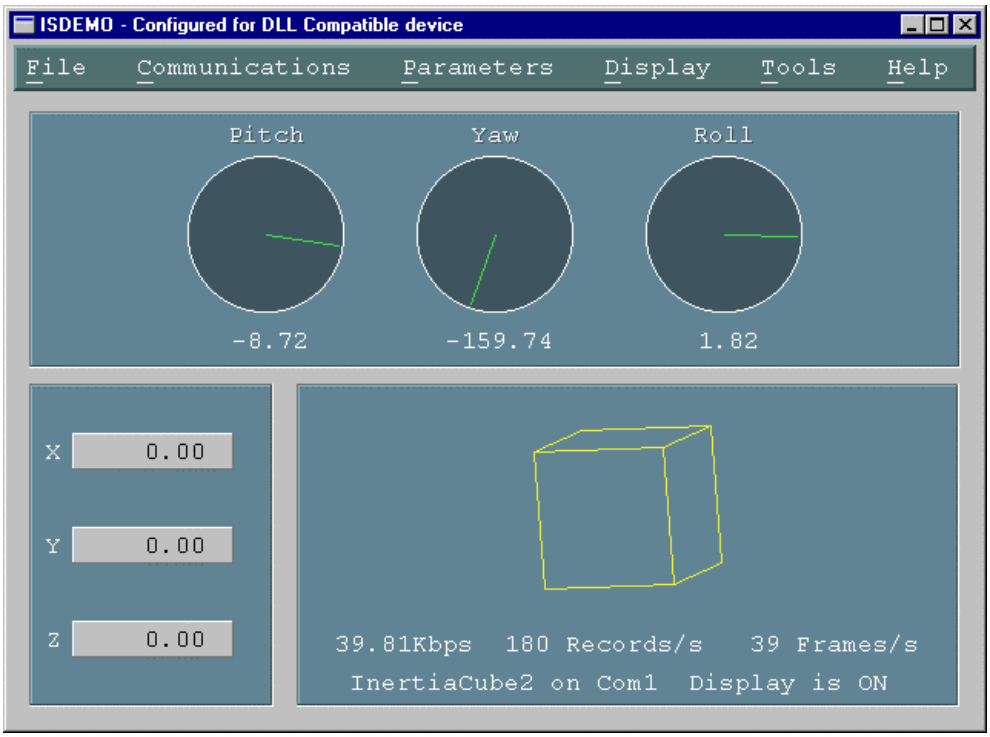

4.3 File options

The *File* menu provides you with the following options:

Select Hardware Device
Reset Heading
Exit

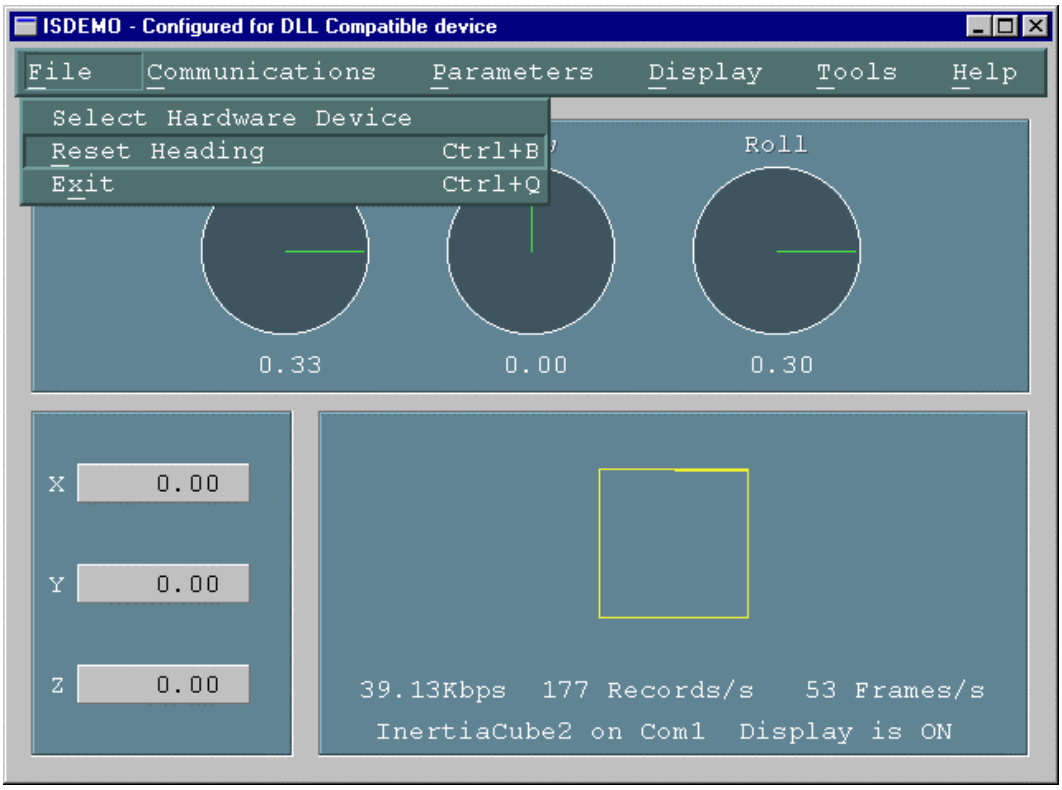

Select Hardware Device — *System Initialization* window (also seen at initial start-up) is shown when *Select Hardware Device* is selected. Use this window to select or detect the tracker model connected to your computer.

Reset Heading — Resets the current heading to zero.

Exit — Exits ISDEMO

4.4 Communications options

This menu item will connect the tracker through the DLL. The DLL will automatically detect an InterSense tracker connect to COM ports 1 through 4 on the PC. The baud rate of the InertiaCube^2 is fixed at 115,200 baud. Make sure the computers serial port is capable of supporting this baud rate. The first two rates (kbps and records/s) displayed at the bottom of the window show the InertiaCube^2 update rates. The third rate (frames/s) shows the graphics update rate based on the PC's hardware configuration.

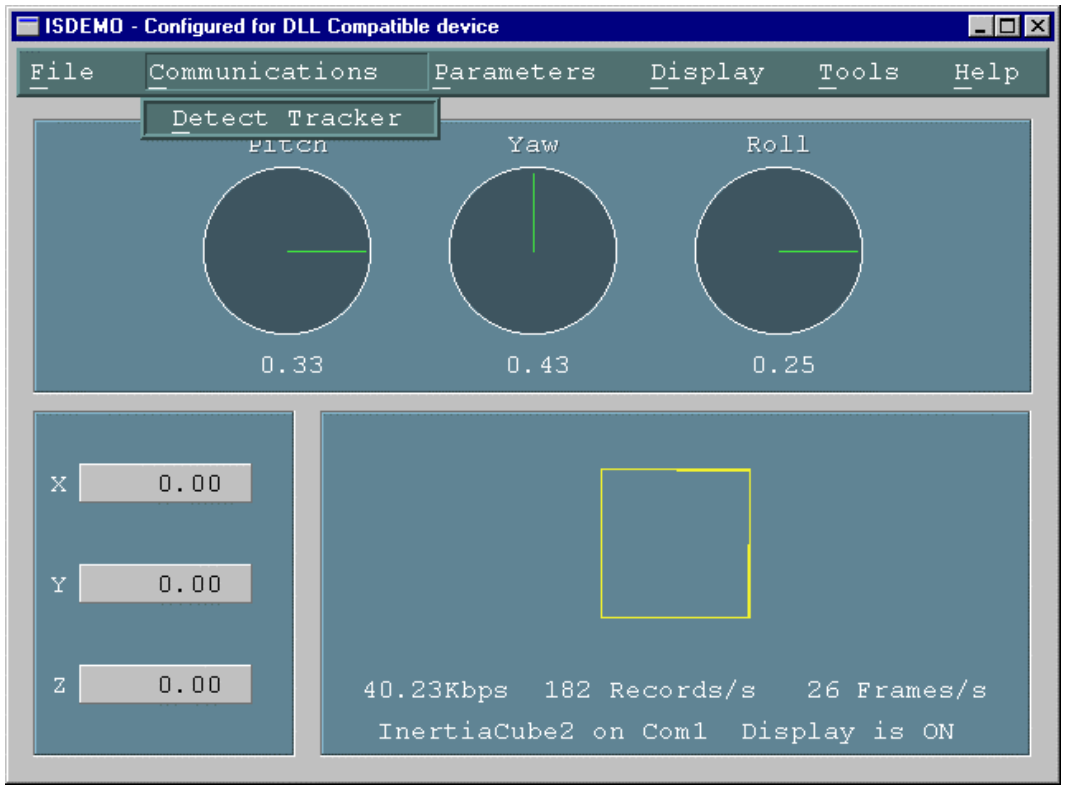

Detect Tracker Will reinitialize the DLL and detect the connected tracking device(s).

4.5 Parameter options

Parameters menu gives you access to the tracker configuration controls.

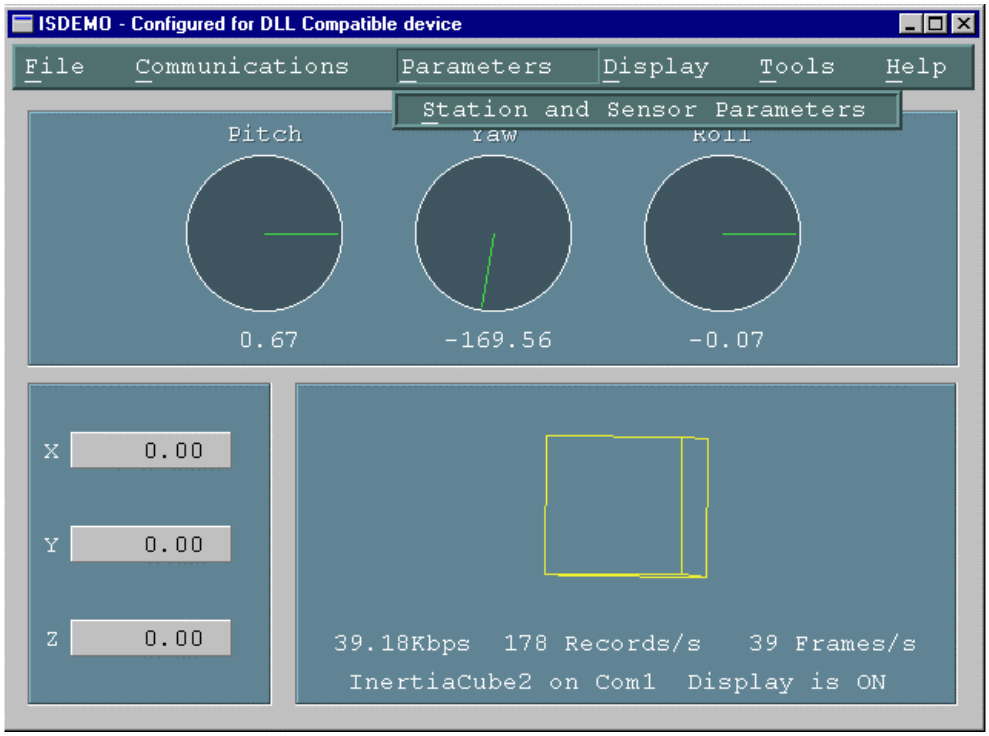

Station and Sensor Parameters

The window shown below allows you to configure each InertiaCube^2. The DLL version 3.07 can support up to four (4) stations, but ISDEMO only will allow interaction with one (1).

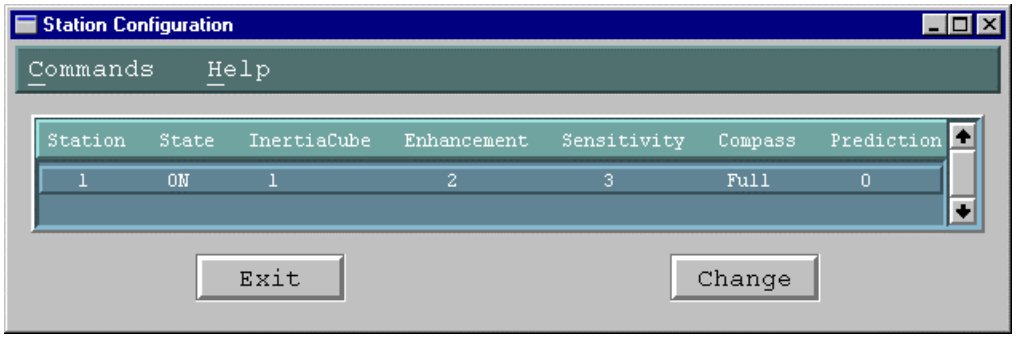

Double clicking on the Station line or clicking the Change button will bring up the Station Configuration window where changes can be made.

Station Configuration window

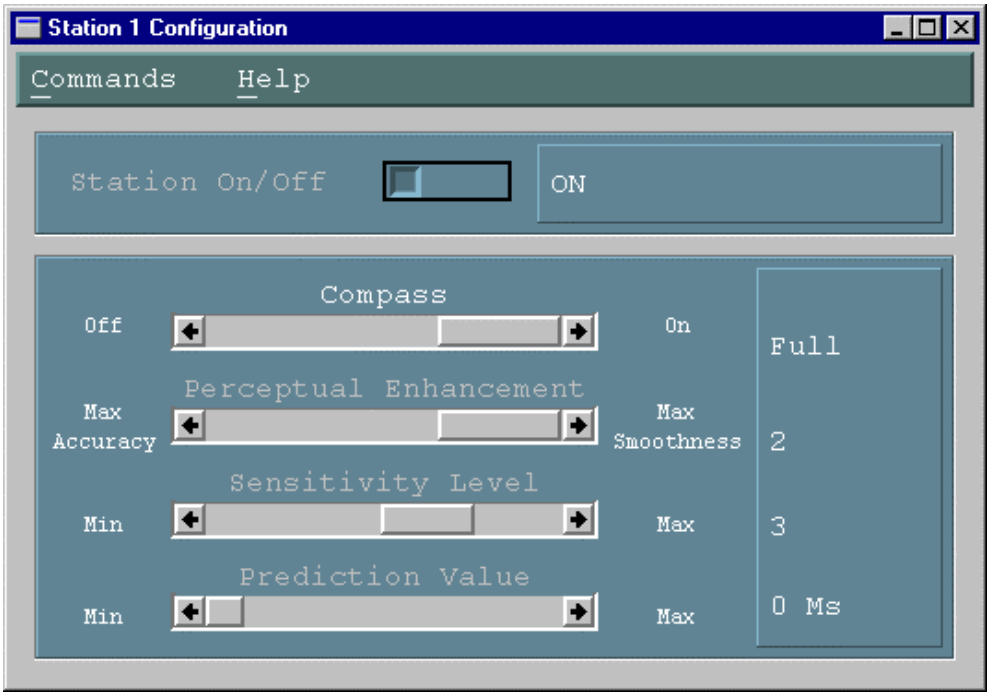

Station ON/OFF The station is always ON and data records will be sent continuously.

Compass This controls the state of the compass component of the InertiaCube^2. When station is configured for FULL compass mode, the readings produced by the magnetometers inside the InertiaCube are used as absolute reference orientation for yaw. Metallic objects and electronic equipment in close proximity to the InertiaCube can affect the magnetometers. When station is configured for PARTIAL compass mode, magnetometer readings are used to reduce drift and maintain stability, but not as an absolute measurement system. In this mode system is much less susceptible to magnetic interference, but heading drift will accumulate. If compass is OFF, no heading compensation is applied.

Perceptual Enhancement Level

(Not applicable for InertiaCube^2 – Consult InterSense if needed)

Sensitivity Level (Not applicable for InertiaCube^2 – Consult InterSense if needed)

Prediction Value (Not applicable for InertiaCube^2 – Consult InterSense if needed)

Mullen Industries, LLC - Ex. 1013
Page 20

4.6 Display Options

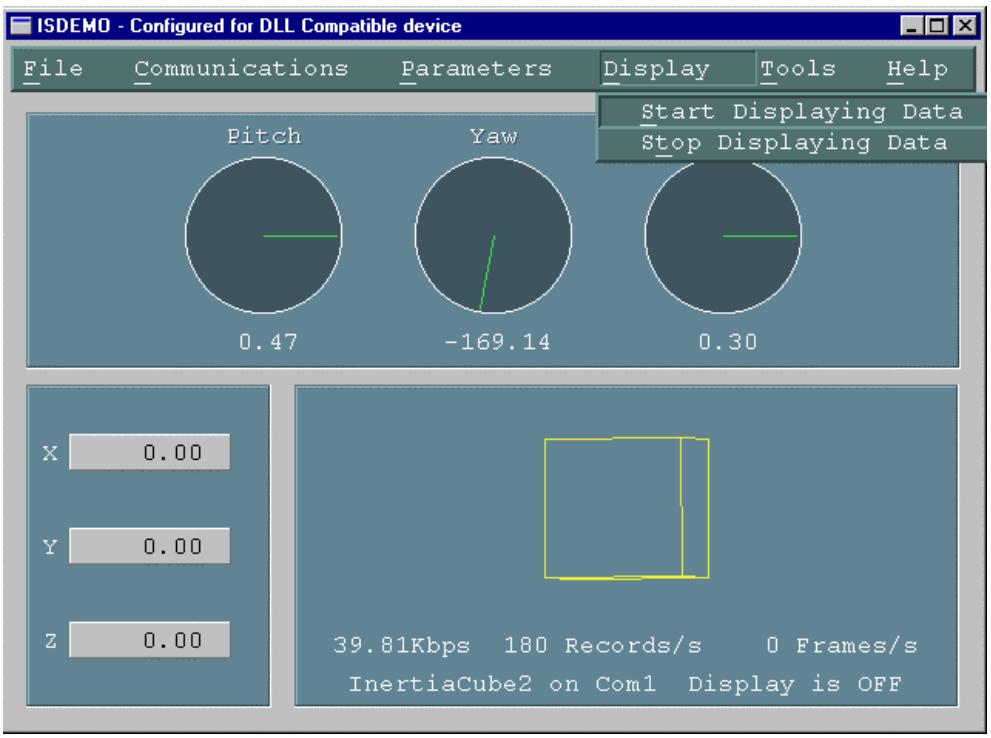

Start (and Stop) Displaying Data

To display orientation data being received from the tracker, use the *Start Displaying Data* option in the *Display* menu or press Ctrl-D.

4.7 Tools Options

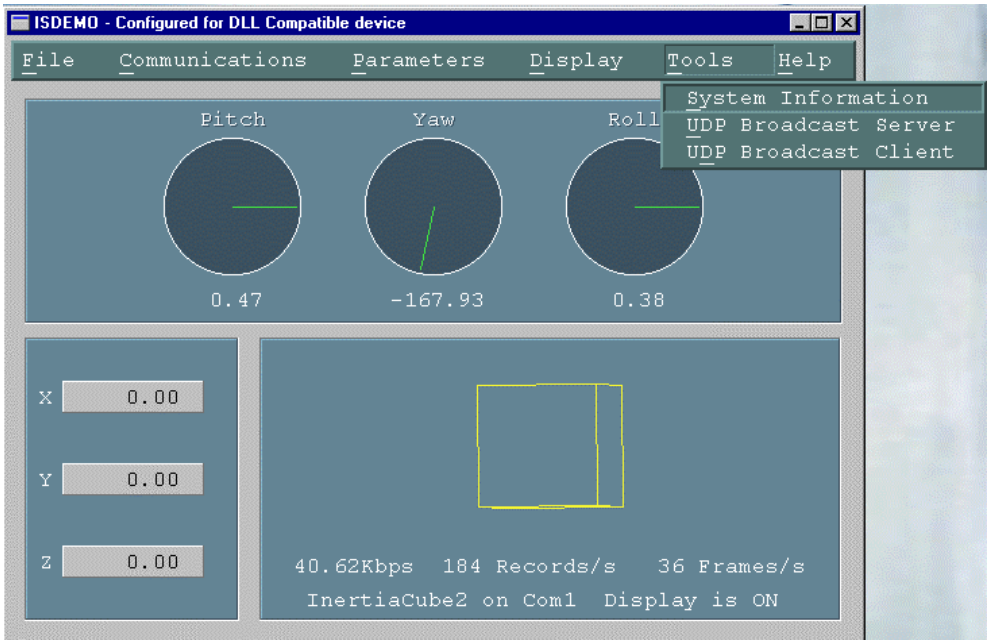

System Information This window provides a summary of the InterSense tracker hardware and software configuration

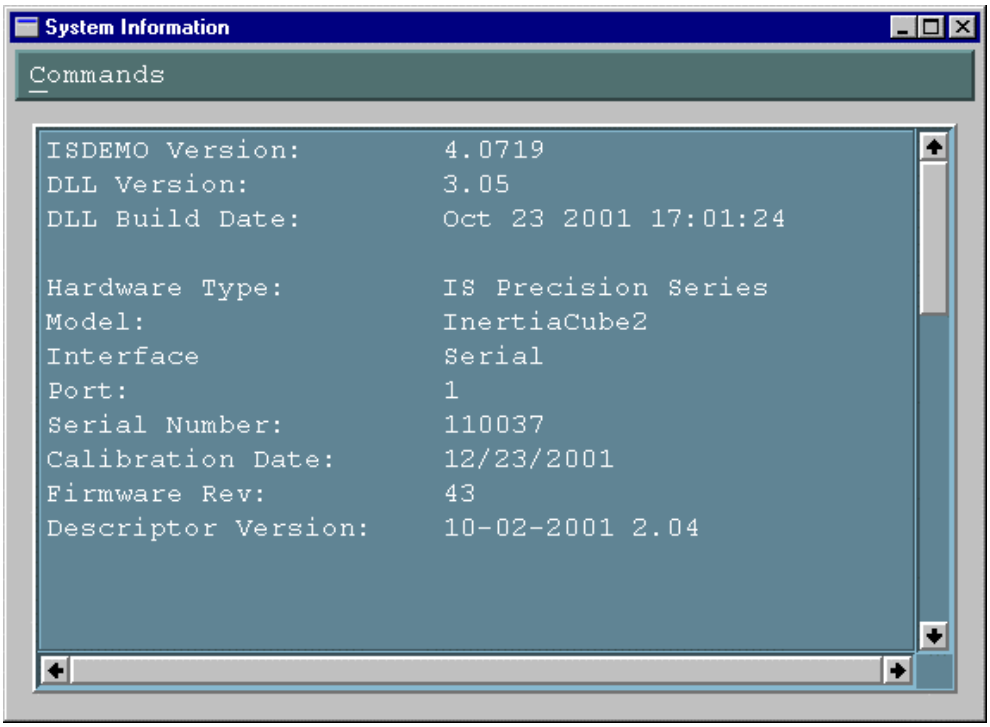

UDP Broadcast Server

This tool is used to broadcast tracker data over the network using UDP packets. Other machines on the network run client software that receives this data.

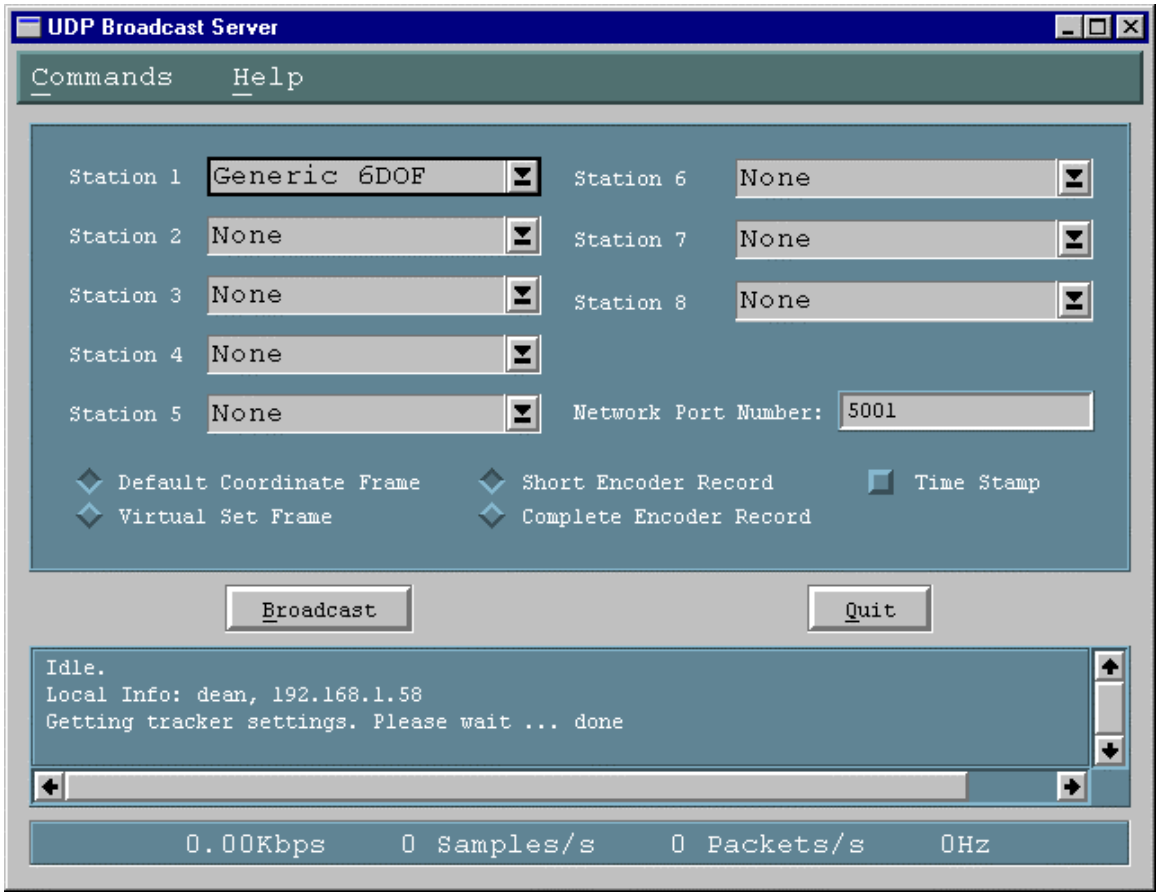

Client software can only receive data, so stations and output records have to be configured here. Depending on available hardware, select one of the 4 available options for each of the stations:

None	Station is OFF and no data will be received from it.
Generic 6DOF	Only position and orientation data is available. Use this option with the InertiaCube^2

NOTE: A unique Network Port number, not used by any other computer on the network, should be assigned to the server. All client applications, including the ISDEMO, should

use that number to receive data. Default is 5001, and should not be changed unless there is a conflict.

UDP Broadcast Client

ISDEMO itself can be a UDP client. Simply enter the port on which data is transmitted and press Receive. As UDP packets are received, data can be displayed in the main window of ISDEMO.

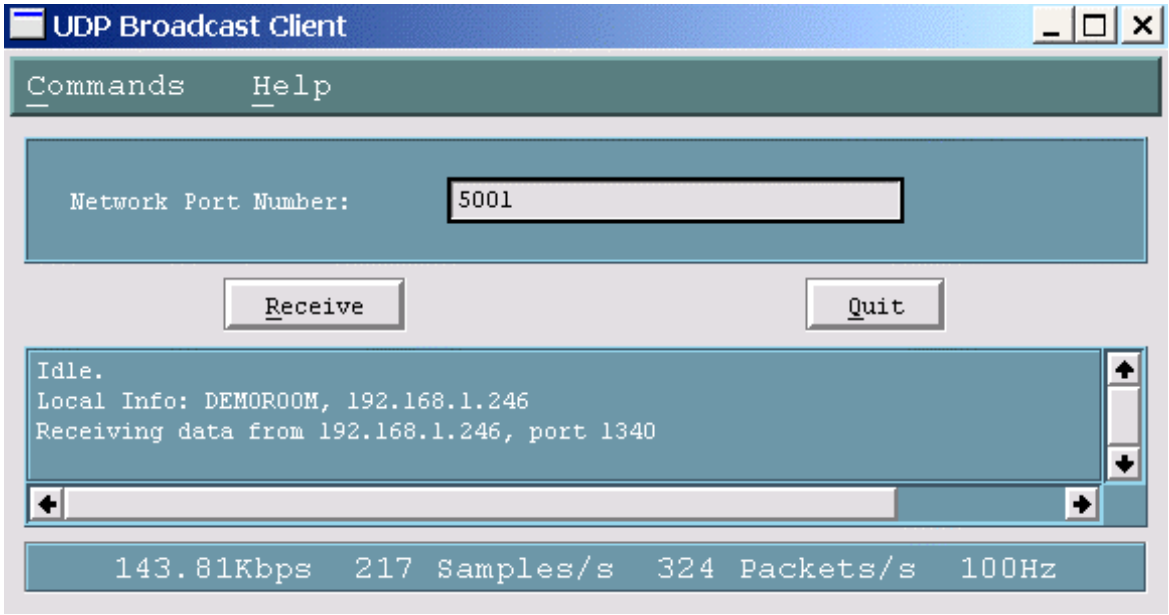

Isdriver Notes

The latest version of ISDRIVER program has support for UDP client and is available from InterSense (support@isense.com).

It can be compiled for Win32 or UNIX, the network code has only been tested on IRIX and Linux so far. If you encounter any problems on other platforms, please contact InterSense and it will be corrected.

File isense.h contains all definitions and function prototypes. There are extensive comments that explain the use of all functions. Win32 platform is detected automatically during compilation. On UNIX, however, you need to specify which flavor of UNIX you're using. At the top of isense.h there are #defines that should be changed appropriately.

File main.c contains a sample main and shows how to open a tracker, get and change station settings, read and display data, etc. The first parameter to ISD_OpenTracker is the port number.

Typically you should use 0, which will cause the program to first search for the tracker on the default network port 5001, then on all available RS232 ports. If you need to use a different network port, enter it as the first parameter to ISD_OpenTracker.

A Makefile is not provided. To compile for UNIX, simply enter "cc *.c".

Help Facility

Not currently supported in this ISDEMO release. All help information is contained in this manual.

Mullen Industries, LLC - Ex. 1013
Page 25

5 Developer's Instructions

For DLL version 3.07

5.1 Introduction

This document describes the interface to be used by the application software to initialize and retrieve data from the InterSense devices using the ISENSE.DLL. This dynamic link library is provided to simplify communications with all models of InterSense tracking devices, including IS-300, IS-600, IS-900, InertiaCube^2 and all versions of InterTrax. It can detect, configure, and get data from up to 4 trackers. The DLL maintains compatibility with existing devices, and also makes the applications forward compatible with all future InterSense products.

5.2 Sample Program

The DLL is distributed with sample programs written in C and Visual Basic to demonstrate usage. It includes a header file with data structure definitions and function prototypes. Most of the API description below can also be obtained from the header file.

`main.cpp` Main loop of the program. All API calls are made from here.

`isense.h` Header file containing function prototypes and definitions, some of which are only applicable to InterSense Professional Series devices and are not used with InterTrax. This file should not be modified.

`isense.cpp` DLL import procedures. This file is included instead of an import library to provide compatibility with all compilers, not just the VC++ 6.0.

`isense.dll` The InterSense DLL. This file should be placed in the Windows system directory, or in the working directory of the application.

5.3 Usage

The API provides an extensive set of functions that can read and set tracker configuration, but in its simplest form can be limited to just 4 calls, as shown below:

```
void main()
{
    ISD_TRACKER_HANDLE      handle;
    ISD_TRACKER_INFO_TYPE   tracker;
    ISD_TRACKER_DATA_TYPE   data;

    handle = ISD_OpenTracker( NULL, 0, FALSE, FALSE );

    if(handle > 0)
        printf( "\n    Az      El      Rl      X       Y       Z \n" );
    else
        printf( "Tracker not found. Press any key to exit" );

    while( !kbhit() )
    {
        if(handle > 0)
        {
            ISD_GetData( handle, &data );

            printf( "%7.2f %7.2f %7.2f %7.3f %7.3f %7.3f  ",
                data.Station[0].Orientation[0],
                data.Station[0].Orientation[1],
                data.Station[0].Orientation[2],
                data.Station[0].Position[0],
                data.Station[0].Position[1],
                data.Station[0].Position[2] );

            ISD_GetCommInfo( handle, &tracker );

            printf( "%5.2fKbps %d Records/s \r",
                tracker.KBitsPerSec, tracker.RecordsPerSec );
        }
        Sleep( 6 );
    }

    ISD_CloseTracker( handle );
}
```

5.4 API

```
ISD_TRACKER_HANDLE
ISD_OpenTracker( HWND hParent,
                 DWORD commPort,
                 BOOL infoScreen,
                 BOOL verbose )
```

`hParent` Handle to the parent window. This parameter is optional and should only be used if information screen or tracker configuration tools are to be used when available in the future releases. All included sample programs pass `NULL`.

`commPort` If this parameter is a number other than 0, program will try to locate an InterSense tracker on the specified RS232 port. Otherwise it looks for USB device, then for serial port device on all ports at all baud rates. Most applications should pass 0 for maximum flexibility. If you have more than one InterSense device and would like to have a specific tracker, connected to a known port, initialized first, then enter the port number instead of 0.

`infoScreen` This feature has not been implemented. Its purpose is to display an information window to show the tracker detection progress and results. Currently DLL writes only to Windows console. Most applications should pass False.

`verbose` Pass True if you would like a more detailed report of the DLL activity. Messages are printed to Windows console.

```
BOOL
ISD_CloseTracker( ISD_TRACKER_HANDLE handle )
```

This function call de-initializes the tracker, closes communications port and frees the resources associated with this tracker. If 0 is passed, all currently open trackers are closed. When last tracker is closed, program frees the DLL. Returns `FALSE` if failed for any reason.

`handle` Handle to the tracking device. This is the handle returned by `ISD_OpenTracker`.

Mullen Industries, LLC - Ex. 1013
Page 28

```
BOOL
ISD_GetTrackerConfig( ISD_TRACKER_HANDLE handle,
                      ISD_TRACKER_INFO_TYPE *tracker,
                      BOOL verbose )
```

Get general tracker information, such as type, model, port, etc. Also retrieves genlock synchronization configuration, if available. See `ISD_TRACKER_INFO_TYPE` structure definition for complete list of items.

`handle` Handle to the tracking device. This is the handle returned by `ISD_OpenTracker`.

`tracker` Pointer to a structure of `type ISD_TRACKER_INFO_TYPE`. See isense.h for structure definition.

```
BOOL
ISD_SetTrackerConfig( ISD_TRACKER_HANDLE handle,
                      ISD_TRACKER_INFO_TYPE *tracker,
                      BOOL verbose )
```

When used with IS Precision Series (IS-300, IS-600, IS-900) tracking devices this function call will set genlock synchronization parameters, all other fields in the `ISD_TRACKER_INFO_TYPE` structure are for information purposes only.

`handle` Handle to the tracking device. This is the handle returned by `ISD_OpenTracker`.

`tracker` Pointer to a structure of type `ISD_TRACKER_INFO_TYPE`. See isense.h for structure definition.

```
BOOL
ISD_GetCommInfo( ISD_TRACKER_HANDLE handle,
                 ISD_TRACKER_INFO_TYPE *tracker)
```

Get `RecordsPerSec` and `KBitsPerSec` without requesting genlock settings from the tracker. Use this instead of `ISD_GetTrackerConfig` to prevent your program from stalling while waiting for the tracker response. This call is used to obtain data rate information.

`handle` Handle to the tracking device. This is the handle returned by `ISD_OpenTracker`.

`tracker` Pointer to a structure of type `ISD_TRACKER_INFO_TYPE`. See isense.h for structure definition.

Mullen Industries, LLC - Ex. 1013
Page 29

```
BOOL
ISD_SetStationConfig( ISD_TRACKER_HANDLE handle,
                      ISD_STATION_INFO_TYPE *station,
                      WORD stationID,
                      BOOL verbose )
```

Configure station as specified in the `ISD_STATION_INFO_TYPE` structure. Before this function is called, all elements of the structure must be assigned valid values. General procedure for changing any setting is to first retrieve current configuration, make the change, and then apply them. Calling `ISD_GetStationConfig` is important because you only want to change some of the settings, leaving the rest unchanged.

This function is ignored if used with InterTrax30 and InterTrax2 products. InterTraxLC and InertiaCube2 only allow the `Compass` field to be changed.

`handle` Handle to the tracking device. This is the handle returned by `ISD_OpenTracker`.

`station` Pointer to a structure of type `ISD_STATION_INFO_TYPE`. See isense.h for structure definition.

`StationID` Number from 1 to `ISD_MAX_STATIONS`.

```
BOOL
ISD_GetStationConfig( ISD_TRACKER_HANDLE handle,
                      ISD_STATION_INFO_TYPE *station,
                      WORD stationID,
                      BOOL verbose )
```

Fills the `ISD_STATION_INFO_TYPE` structure with current settings. Function requests configuration records from the tracker and waits for the response. If communications are interrupted, it will stall for several seconds while attempting to recover the settings.

`handle` Handle to the tracking device. This is the handle returned by `ISD_OpenTracker`.

`station` Pointer to a structure of type `ISD_STATION_INFO_TYPE`. See isense.h for structure definition.

`StationID` Number from 1 to `ISD_MAX_STATIONS`.

Mullen Industries, LLC - Ex. 1013
Page 30

```
BOOL
ISD_GetData( ISD_TRACKER_HANDLE handle,
             ISD_TRACKER_DATA_TYPE *data )
```

Get data from all configured stations. Data is places in the `ISD_TRACKER_DATA_TYPE` structure. Orientation array may contain Euler angles or Quaternions, depending on the settings of the `AngleFormat` field of the `ISD_STATION_INFO_TYPE` structure. `TimeStamp` is only available if requested by setting `TimeStamped` field to `TRUE`. Returns `FALSE` if failed for any reason.

`handle` Handle to the tracking device. This is the handle returned by `ISD_OpenTracker`.

`data` Pointer to a structure of type `ISD_TRACKER_DATA_TYPE`. See isense.h for structure definition. The structure is designed to accommodate InterSense Professional Series devices that support multiple sensors. In the case of the InterTrax series trackers, the only data available is Euler angles in the first element of the Station array. Orientation data order is Yaw, Pitch, Roll.

```
BOOL
ISD_GetCameraData( ISD_TRACKER_HANDLE handle,
                   ISD_CAMERA_DATA_TYPE *Data );
```

Get camera encode and other data for all configured stations. Data is places in the `ISD_CAMERA_DATA_TYPE` structure. This function does not service serial port, so `ISD_GetTrackerData` must be called prior to this.

Should only be used with IS Precision Series tracking devices, not valid and will be ignored if used with InterTrax.

`handle` Handle to the tracking device. This is the handle returned by `ISD_OpenTracker`.

`data` Pointer to a structure of `ISD_CAMERA_DATA_TYPE`. See isense.h for structure definition.

```
BOOL
ISD_SendScript( ISD_TRACKER_HANDLE handle,
                char *command );
```

Send a configuration script to the tracker. Script must consist of valid commands as described in the interface protocol. Commands in the script should be terminated by the New Line character '\n'. Line Feed character '\r' is added by the function and is not required.

Should only be used with IS Precision Series tracking devices, except InertiaCube2, not valid and will be ignored if used with InterTrax.

`handle` Handle to the tracking device. This is the handle returned by `ISD_OpenTracker`.

`command` Pointer to a string containing the command script.

```
BOOL  ISD_NumOpenTrackers( WORD *count )
```

Number of currently opened trackers is stored in the parameter passed to this function.

```
BOOL  ISD_ResetAngles( ISD_TRACKER_HANDLE handle,
                       float yaw,
                       float pitch,
                       float roll )
```

Reset tracker angles to specified values, only serial version of InterTrax2 is supported in this release.

```
BOOL  ISD_ResetHeading( ISD_TRACKER_HANDLE handle,
                        WORD stationNum );
```

Reset heading to zero.

Mullen Industries, LLC - Ex. 1013
Page 32

6 Appendix A - Frequently Asked Questions

Q1. What is the maximum length of the cable between the InertiaCube^2 and the computer?

The cable between the InertiaCube and the computer has been tested to a length of 100 feet. InterSense can provide longer cables. Please contact your sales representative for information.

Q2. Does the InertiaCube have batteries? How often do they have to be changed?

The InertiaCubes do not contain batteries.

Q3. Are all the interconnection cables shielded?

Yes.

Q4. What is the MTBF of each component separately?

Based on supplier data, the MTBF for the InertiaCube^2 is estimated at 5 years.

Q5. What type of shock can the InertiaCube^2 sustain?

These InertiaCube is designed to withstand a maximum acceleration of 500 g. Basically this means that a direct impact on the devices is not recommended. The InertiaCubes can withstand a higher level of shock if installed on the inside of an object, or mounted on rubber.

Q6. What are the PIN assignments on the DB9 on the InertiaCube^2?

Pin	*Function*
1	*DCD*
2	*RX*
3	*TX*
4	*DTR*
5	*GND*
6	*DSR*
7	*RTS*
8	*CTS*
9	*RI*

Currently, the InertiaCube^2 uses four wires; RX, TX RTS, and GND.

Q7. Do you have any advice about working with software packages?

Consult with the software vendor or contact InterSense support@isense.com.

Q8. How do I know whether I have the latest release of ISDEMO?

Check our web site, the URL is http://www.isense.com/support.html . Click on the ISDEMO.ZIP hypertext link. We always post the latest release for you to download.

Mullen Industries, LLC - Ex. 1013
Page 33

7 Appendix B – Troubleshooting

Problem	Reason/Solution
ISDEMO doesn't work!	Most common reasons (not in any order): 1) Connected to wrong COM port plug on the back of the computer. 2) The selected serial port is captured by another program and can't be opened by ISDEMO. 3) Serial port not capable of running at 115,200 baud rate. This is usually due to older computers that cannot run at 115,200 baud. The problem is a lack of a proper UART such as the 16550. 4) Incorrect port settings - use *autodetect* for Com parameters. 5) Not using *Start Displaying Data*. It may be necessary to select *Stop Displaying Data* first.
ISDEMO is running, but system does not track	Check for the following: 1) The InertiaCube^2 is not plugged in. 2) The InertiaCube^2 was plugged in *after* power up and a detect command has not been issued
InertiaCube^2 interference	Check for the following: 1) Placement directly on top of metal. You should place the InertiaCube an inch or two away.
Orientation is drifting uncontrollably	1) Make sure that InertiaCube^2 is properly plugged in. 2) Keep InertiaCube^2 still for 10 seconds after connecting with ISDEMO or DLL. 3) Compass is turned off in ISDEMO.

8 Appendix C – Health and Safety warnings and guidelines

Important:
Most of the side effects described in this section usually only occur when a tracking device, like an InertiaCube^2, is used with personal displays or 3D glasses. The symptoms listed below are usually referred to as "Simulator Sickness".

Read and follow the user instructions.
Before using InertiaCube^2, read and follow the user instructions. In exceptional circumstances, failure to read and follow the user instructions could result in possible side effects that may lead to accidental injury during or after use.

Recommended.
For use only by persons 15 years of age or older. This system should not be used by:

- Persons under the influence of drugs and alcohol.
- Pregnant women.
- Persons suffering from a heart condition
- Persons with a history of epilepsy.

Take frequent breaks.
It is recommended that InertiaCube^2 should be used for no more than one hour at a time. After that you should take a 15-minute rest break before re-use regardless of how you feel. If you feel uncomfortable at any time, stop using immediately.

Rest after using.
Rest for at least 15 minutes after using InertiaCube^2 even if you feel fine and have experienced none of the symptoms described below. If you have experienced any undesirable effects or symptoms, rest until they are completely gone. Do not walk, drive, ride a bike or operate equipment until you have rested, otherwise you risk injury to yourself and others.

Epilepsy and seizures.
A very small part of the population has a condition that may result in epileptic seizures or loss of consciousness. If you or anyone in your family has epilepsy or has experienced seizures or loss of consciousness, do not use InertiaCube^2 without first consulting your physician. Persons who have not experienced seizures or loss of consciousness may still have an epileptic condition. We recommend that a non-user is always present when InertiaCube^2 is being used.

Mullen Industries, LLC - Ex. 1013
Page 35

Additional possible risks of harm.

While tracking technology has been used for many years, the range of sensors that are used to calculate positional and angular data continues to develop. Over the last twenty years as considerable amount of research has been conducted into possible side effects induced in users of real time computing systems that include various types of tracking sensors. This research has reported the symptoms described below from some users of these systems.

InertiaCube^2 has been designed using the latest sensor technologies and we believe that the possibility of such symptoms occurring has been minimized. However, it is not possible to design for the individual characteristics of each user and it is possible that users will experience one or more of the side effects described below. Historic research shows that the effects or symptoms ordinarily occur during and immediately after use and should diminish quickly once the user stops using the system.

We want you to make an informed and responsible choice about using the InertiaCube^2. Accordingly, we warn you that even if you read and follow the User Instructions, you may experience one or more of the following effects or symptoms if you use InertiaCube^2 with a personal display: eye strain, altered vision, eye or muscle twitching, headaches, neck and shoulder strain, nausea and vomiting, disorientation, dizziness, impaired balance and stability, drowsiness, fainting, fatigue, sweating, extreme paleness, impaired hand-eye or other co-ordination.

Each effect or symptom, if it occurs, should be temporary and may last from a few minutes to 30 minutes.

Mullen Industries, LLC - Ex. 1013
Page 36

9 Appendix D – Care and Maintenance

Care and Cleaning

Recommended cleaning materials are the same as those for computers. Antistatic cloths can clean the components and reduce static electricity. Cleaning solutions should be applied to the cloth and not directly on any part of the system components.

Phone & email support

Any questions regarding the care and maintenance of your InertiaCube^2 can be handled by phone (781) 270-0090 or by email support@isense.com. Please see the Support page at www.isense.com for the technical support contact information.

Returns to InterSense

Should you need to return any component of your system to InterSense for replacement or repair, contact InterSense prior to shipment to obtain a Return Material Authorization (RMA) Number and when shipping use the following address:

InterSense Inc.
73 Second Avenue
Burlington, MA 02129
USA

Please note that InterSense will not be responsible for materials returned without an RMA number clearly marked on the outside of the shipping package.

Batteries

There are no batteries in the InertiaCube^2 system.

Electrical power

6 VDC, 100 mA