UNITED STATES PATENT AND TRADEMARK OFFICE

BEFORE THE PATENT TRIAL AND APPEAL BOARD

AROMA360, LLC,

Petitioner,

v.

AIR ESSCENTIALS, INC.,

Patent Owner.

IPR 2025-00705

U.S. Patent No. 9,527,094

DECLARATION OF CHRISTOPHER WHITE, Ph.D.

I, Dr. Christopher White, declare as follows:

I. INTRODUCTION

1. Aroma360, LLC ("Aroma360") has retained my services in connection with the above captioned *Inter Partes* Review (IPR) of U.S. Patent No. 9,527,094 ('094 Patent). I have been asked to study and provide my opinions as an independent expert witness regarding technology described in the '094 Patent. I am being compensated at my usual and customary rate for my time. Such compensation, however, does not influence my opinion nor does the outcome of this proceeding impact my compensation.

A. Qualifications

2. My qualifications and professional experience are described in my curriculum vitae. I have been informed that a copy of my curriculum vitae will be submitted with my declaration. The following is a summary of my relevant qualifications and professional experience.

3. I received my PhD in Mechanical Engineering from Yale University in 2001. Prior to that I received my M.S. in Mechanical Engineering from Yale University in 1999. I received B.S. and M.S. degrees in Mechanical Engineering from Stony Brook University in 1994 and 1996, respectively.

4. I have over 20 years of experience conducting fundamental research in fluid dynamics and thermodynamics. Many of these research studies required custom designed fluid engineering systems employing, individually or in

combination, air pumps, air compressors, fans, blowers, atomizers, flow restriction devices (e.g., venturis, orifices) and flow conditioning devices (e.g., baffles, screens, honeycomb structures).

5. I have designed oil atomization systems and used commercial oil atomization systems. These systems are used in my research to "seed" air flows with oil droplets to visualize the fluid flow and to measure fluid velocities using lasers and cameras.

6. I have designed chambers in atomization systems that are equivalent of the diffusion chamber disclosed in the '094 Patent to mix air and oil droplets in my experimental studies described above. In these chambers, I have used baffles and other flow obstructions to reduce turbulence, direct the flow in a certain direction, and improve mixing. *See, e.g.*, Biles, D., Ebadi, A., Allard, M. & White, C.M., *The Design and Validation of a Thermal Boundary Layer Wall Plate*. ASME J. Fluids Eng. 141:121403-1:10 (2019). DOI: 10.1115/1.4043773.

7. I worked as a heating ventilation and air-conditioning (HVAC) contractor during my undergraduate studies and hold a certified HVAC license. In these work activities, I have installed and serviced compressors, fans, blowers, and air handlers. Additionally, to reduce air flow noise in existing air duct systems, I performed retrofit installation of sound dampers and flow obstructions to reduce/prevent flow turbulence.

8. For my Master of Science Research Program at Stony Brook University, I designed and tested a compressed air liquid atomization system to increase the power output of a commercial gas turbine generator. *See* White C. M., Raghu, S., Giannotti G. & Giannotti H., *Power boost of gas turbines by inlet air cooling*. Proceedings of the 31st Intersociety Energy Conversion Engineering Conference, Washington, DC, USA, (1996), pp. 725-729 vol.2, DOI: 10.1109/IECEC.1996.553787.

9. My prior and visiting research positions include Postdoctoral Research Associate, Stanford University (2001-2003), Senior Member of the Technical Staff, Combustion Research Facility, Sandia National Laboratories (2003-2006), Visiting Scientist, Combustion Research Facility, Sandia National Laboratories (2007), Consultant, Combustion Research Facility, Sandia National Laboratories (2007-2009), and University Visitor (2014 and 2018), University of Melbourne, Australia. The research I performed in all these positions related to the fundamental study of fluid systems.

10. I am currently Professor and Chair of the Department of Mechanical Engineering at the University of New Hampshire in Durham, New Hampshire. My research focuses on fluid mechanics, thermodynamics, energy conversion technologies, turbulence and unsteady flows, complex fluids, multi-phase flows, and drag reduction.

11. I have taught undergraduate and graduate courses in Fluid Mechanics; Thermodynamics; Experimental Measurements and Data Analysis; Systems Modeling, Simulation, and Control; Experimental Fluid Dynamics, Renewable Energy Technologies; and Fluid Turbulence. In my academic instruction, I have used air pumps, air compressors, fans, blowers, atomizers, and flow restriction devices (e.g., venturis and orifices) and provided instruction on the fundamental principles that underlie the kinematics and dynamics of these fluid systems.

12. I have expertise in mechanics, fluid dynamics, thermodynamics, combustion, systems control, and energy conversion technologies.

13. Over the last 20 years, I have authored or co-authored a wide range of book chapters, journal articles, conference papers, and technical reports in the thermal-fluid sciences. I have had two papers designated by the Thomson Reuters Essential Science Indicators (ESI) as a Highly Cited Paper. Highly Cited Papers are those that rank among the top 1% of most cited papers in their subject field. I have published invited research papers and given invited talks on fluid dynamics and fluid engineering systems. A detailed record of my professional qualifications, including a list of publications, awards, and professional activities, is set forth in my curriculum vitae. *See* EX1003.

II. MATERIALS REVIEWED

14. In reaching the conclusions described in this declaration, I have relied on the documents and materials cited herein as well as those identified in the List of Exhibits set forth in the Petition. These materials comprise patents, related documents, and printed publications. Each of these materials is a type of document that experts in my field would have reasonably relied upon when forming their opinions and would have had access to either through the applicable patent offices and/or well-known libraries, conferences, publications, organizations, and websites in the field as further discussed herein. My opinions are also based upon my education, training, research, knowledge, and personal and professional experience.

III. SUMMARY OF MY OPINIONS

15. The following table lists the grounds of rejection I have considered in this Declaration:

Ground	Prior Art	Basis	Claims
1	Sevy	Obviousness	7-9, 11
2	Sevy in view of Zeng	Obviousness	7-9, 11
3	Goubet	Obviousness	7-9, 11
4	Goubet in view of Kaiser	Obviousness	7-9, 11
5	Gao	Obviousness	7-9, 11
6	Gao in view of Zeng	Obviousness	7-9, 11

16. After reviewing the ’094 Patent and the prior art, it is my opinion that claims 7-9 and 11 are invalid under the proposed grounds. My opinions and the bases therefore are detailed throughout this Declaration.

IV. LEGAL PRINCIPLES

A. Understanding of Patent Law

17. I am not an attorney and will not be offering legal conclusions. I have been informed, however, of several principles concerning legal issues relevant to my analysis of the Challenges to the claims of the ’094 Patent, and I relied on these principles to arrive at my conclusions.

18. I understand a claim is anticipated under 35 U.S.C. § 102 if all limitations are found in a single prior art reference, arranged as in the claim. The identical invention must be shown in complete detail as is contained in the patent claim.

19. I understand a prior art reference can disclose an element not expressly identified in a reference if the element is “inherently present” in the reference. To be “inherent,” I understand the missing element must necessarily be present in the reference. An element is not “inherent” if the missing element is only probably present or if there is merely a possibility it is present.

20. I understand a claim is invalid as obvious under 35 U.S.C. § 103 if the differences between the subject matter sought to be patented and the prior art are such that the subject matter of the claim as a whole would have been obvious at the time of the patent’s filing date to a Person of Ordinary Skill in The Art (POSITA). It is my understanding that the following factors are used to determine whether the

claimed subject matter would have been obvious: (i) the scope and content of the prior art; (ii) the differences between the prior art and the claimed invention; (iii) the level of ordinary skill in the field of the invention; and (iv) any relevant objective considerations of non-obviousness.

21. I understand a party asserting obviousness based on a combination of prior art references must demonstrate that one of ordinary skill in the art would have been motivated to combine the teachings of those references to achieve the claimed invention with a reasonable expectation of success. It is my understanding that it is not sufficient to show that one of ordinary skill in the art *could* combine elements of multiple references. Instead, there must be a rational reason that would have prompted a POSITA to combine the elements in the way the claimed invention does; and the reason should be explained or articulated.

22. I understand that a patent claim is obvious when it does no more than combine familiar elements according to known methods to yield predictable results. I understand that when a work is available in one field of endeavor, design incentives and other market forces can prompt variations of it, either in the same filed or a different one. If a POSITA can implement a predictable variation, section 103 may bar its patentability. Similarly, if a technique has been used to improve one device, a POSITA would recognize that it would improve similar devices in the same way, using the technique is obvious unless its actual application is beyond his or her skill.

23. I understand that a POSITA is often able to fit the teaching of multiple patents together like pieces of a puzzle. When there is a design need or market pressure to solve a problem and there are a finite number of identified, predictable solutions, a POSITA has good reason to pursue the known options within his or her technical grasp. If this leads to the anticipated success, it is likely the product not of innovation but of ordinary skill and common sense.

24. I understand that a prior art inventor need not conceive of its invention using the same words as the patentee uses in its later drafted claims.

25. I understand that obviousness may be shown based on a combination of references or based on a single reference. I further understand that prior art is analogous where either: (1) the art is from the same field of endeavor, regardless of the problem addressed; or (2) even if the reference is not within the same field of endeavor, the reference is still reasonably pertinent to the particular problem with which the inventor is involved. A reference is reasonably pertinent even though it may be in a different field from that of the inventor's endeavor if it is one which, because of the matter with which it deals, logically would have commended itself to the inventor's attention in considering this problem. That is, familiar items may have obvious uses beyond their primary purposes.

26. I understand a combination of references would not have been obvious if the alleged modification(s) to be made to the reference(s) are inconsistent with the

stated goals of the reference(s). I understand a combination of references would not have been obvious if the modification of the reference(s) to derive what is claimed would render the reference(s) unsatisfactory or inoperable for their intended purpose. I further understand the party asserting obviousness must explain why a POSITA would have selected components for combination in the manner claimed.

27. It is my further understanding that an invention would not have necessarily been obvious simply because all the elements of the invention may have been known separately in the prior art; there must be a reason to combine the separately known elements. Obviousness cannot be based on a hindsight combination of components selectively picked from the art using the claims as guide.

B. Claim Construction

28. I understand that claim construction in an IPR proceeding is a legal question for the Patent Trial and Appeal Board (PTAB or Board) to decide. In general, I understand that claim terms are to be given their ordinary and customary meaning to a POSITA in the context of the patent at the time the patent was filed.

29. I also understand that in construing claim terms, the Board asks what the claim terms would mean to a person of ordinary skill in the relevant art in view of the plain claim language and the disclosures of the patent and prosecution history. I understand that while the Board may also consider other external evidence, such

as dictionaries, the disclosures in the patent and prosecution history carry more weight than external evidence.

30. As such, any claim term not construed should be given its ordinary and customary meaning as would be understood by one of ordinary skill in the art.

31. I understand that the best source for determining the meaning of a claim is intrinsic evidence—the claims themselves, the written description, and the prosecution history. I also understand that extrinsic evidence, which consists of all evidence external to the patent and prosecution history, may be considered to determine the meaning of a claim term.

32. In view of the principles described above and the materials I have reviewed, I do not believe any limitations in the claims addressed herein require a specific construction to support the opinions I provide in this declaration.

33. I note that Patent Owner has taken certain positions with respect to claim construction in a parallel proceeding in the U.S. District Court for the Southern District of Florida, *Air Esscentials, Inc. v. Aroma360, LLC*, No. 24-cv-20594-KMW (S.D. Fla.) (the "Litigation"). Specifically, Patent Owner has taken the following claim construction positions:

Claim Term	**Proposal**	**Relevant Claims**
Preambles	Not Limiting	Claim 7
Silencer Assembly	Plain and Ordinary	Claims 7-9, 11

Claim Term	Proposal	Relevant Claims
	Alternatively: assembly that reduces the amount of noise generated during operation of the fluid dispersion assembly as the fluid dispersion flows therethrough	
Silencer Chamber	Silencer Assembly	Claim 7
Said Silencer Chamber	"said silencer assembly"	Claim 7
Compressed Air Source	Plain and Ordinary Meaning Alternatively: a source of air that is above ambient pressure	Claims 7-9, 11
Mixing Chamber	Plain and Ordinary Meaning Alternatively: a region where the operative fluid is combined with the compressed air.	Claims 8-9
Diffusion Chamber	Plain and Ordinary Meaning Alternatively: a region that is structured to facilitate the formation of the fluid dispersion prior to discharge.	Claims 7-9, 11

EX1018, Exhibit B.

34. With respect to the term "said silencer assembly", Patent Owner has contended that its construction is intended to rectify a clerical error in the body of claim 7. EX1018, pgs. 1-2. I understand that Petitioner acknowledged that the term lacks antecedent basis and proposed providing the necessary antecedent basis by construing "said silencer chamber" as "a silencer chamber" rather than removing the "silencer chamber" limitation and broadening the scope of the claim. *Id*. In my opinion, Petitioner's proposed correction to the alleged clerical error to provide the

necessary antecedent basis is more appropriate than Patent Owner's proposal to remove a specific claim limitation.

35. In addition to the positions Patent Owner has taken above, the Parties in the Litigation have agreed to stipulate to the meaning of the four terms below:

Claim Term	Stipulated Construction	Relevant Claims
Fluid Dispersion	"mixture of an operative fluid in air comprising a plurality of substantially uniform droplets (having substantially the same diameter) of the operative fluid dispersed throughout the air"	Claims 7-9, 11
Baffle	"structure that disrupts the flow of the fluid dispersion through the fluid dispersion assembly"	Claims 7-9, 11
Diffusion Unit	Plain and ordinary meaning	Claims 1, 4, 7-10
Partially restricts movement	Plain and ordinary meaning	Claims 7-9, 11

EX1018, Exhibit A.

36. For purposes of this Declaration, I have been asked by Petitioner's counsel to assume that Patent Owner's proposed constructions and the Parties' stipulated constructions apply. If Patent Owner or the Board argues that a different construction applies, then I reserve the right to supplement my opinions in this Declaration to address those constructions.

C. Level of Ordinary Skill in the Art

37. I understand that certain issues in an IPR, such as claim construction and whether a claim is invalid as obvious, are assessed from the view of a hypothetical person of ordinary skill in the relevant art at the time of the invention. I understand there are multiple factors relevant to determining the level of ordinary skill in the art, including: (1) the level of education and experience of persons working in the field at the time of the invention; (2) the sophistication of the technology; (3) the rapidity with which innovations are made; (4) the types of problems encountered in the field; and (5) the prior art solutions to those problems.

38. I understand that a person of ordinary skill in the art is a person of ordinary creativity and not an automaton.

39. In order to determine the characteristics of a hypothetical POSITA at the time of the claimed invention, I have considered a variety of factors. I have considered the prior art (referred to the in the "Materials Considered" section of this declaration) and the various approaches to address fluid dispersion assemblies disclosed in those prior art documents, the types of problems encountered in the art and the solutions to those problems, the alleged problems encountered by the inventor as described in the '094 Patent, the sophistication of the technology involved, and the educational background and experience of those actively working in the relevant field at the time of the invention.

40. Additionally, I considered the technology available in 2012, immediately before the August 29, 2012, filing of provisional patent application No. 61/694,500 to which the ’094 Patent claims priority. *See* EX1001. I also considered the professionals with whom I worked during that time, including their levels of education, sophistication, and activities in professional associations. I am informed that such considerations are in accordance with factors identified in case law and typically considered to determine the level of skill in the art.

41. The field of “art” for the ’094 Patent is fluid dispersion assemblies. EX1001, Abstract.

42. In view of the above and based on my experience and knowledge, I believe a hypothetical Person of Ordinary Skill in The Art (POSITA) with regard to the ’094 Patent would have either: (1) a bachelor’s degree in mechanical engineering, aerospace engineering, chemical engineering, or a closely related field, and at least two years of work experience designing or developing products involving fluid dynamics; or (2) a master’s degree in mechanical engineering, aerospace engineering, chemical engineering, or a closely related field, and at least one year of work experience in fluid dynamics or fluid systems engineering.

43. Although I describe the POSITA as of August 2012, it is my further opinion that the fundamental qualifications, attributes, and skills of the person of

ordinary skill in the art would have been the same for many years prior to August 2012 and presently remain the same.

44. Based on my education, experience, and background, I believe I qualify as at least a person of ordinary skill in the art.

V. THE ’094 PATENT

A. Priority of ’094 Patent

45. The ’094 Patent was filed on September 3, 2015 as Application No. 14/844,650 (“the ’650 Application”). EX1001, INID Codes (21), (22); *see also* EX1004. The ’650 Application is a continuation of Application No. 13/838,364 (the “’364 Application”), filed on March 15, 2013, and claims priority to Provisional Patent Application No. 61/694,500 (“the Provisional Application”), filed on August 29, 2012. EX1001, INID Codes (60), (63); *see also* Ex-1005. Thus, the earliest filing date to which Patent Owner may allege any claim of the ’094 Patent is entitled to claim priority is August 29, 2012. *See* ’094 Patent. EX1001.

B. Summary of the ’094 Patent Prosecution History

46. The ’364 Application was filed on March 15, 2013, and claims priority to the Provisional Application. During prosecution of the ’364 Application, the Examiner, on March 2, 2015, issued a non-final office action rejecting claims 1-3, 5, 8, 10, 11, 13-15, and 17, and objecting to claims 4, 6, 7, 9, 12, 16, and 18-20. EX1005, pgs. 65-67. The examiner rejected claims 1-3, 5, 8, 10 under pre-AIA 35 U.S.C. § 103(a) as being unpatentable over Rajala in view of Dorendorf. EX1005,

pg. 67. The Examiner rejected claim 13 under pre-AIA 35 U.S.C. § 102 as being anticipated by Rajala. EX1005, pg. 67. The Examiner also stated that certain claims would be allowable if rewritten in independent form. *Id.* The Examiner stated that "Rajala also does not disclose a suppressor assembly as recited, however, Dorendorf teaches a fluid dispersion assembly comprising a suppressor assembly to insulate sound." EX1005, pg. 68. With respect to then pending claim 8, the examiner stated that "the suppressor assembly [of Dorendorf] is a silencer assembly." *Id.*

47. In response, Applicant did not dispute that the combination of Rajala and Dorendorf taught a suppressor assembly and/or a silencer assembly. *Id*., pgs. 78-94. Instead, Applicant re-wrote each of allowable dependent claims 4, 6, 9, 12, 16, and 18 in independent form. *Id*. Original dependent claims 4, 12, and 18 contained subject matter not relevant to this Petition, and thus, are not discussed herein.

48. Original dependent claim 6 required an atomizer exhaust channel disposed in a communicating relation between said mixing chamber and said suppression chamber to facilitate transfer of the fluid dispersion therebetween. *Id*.

49. Original dependent claim 12 was directed to the silencer assembly, and the claim was amended to also include the suppressor assembly. *Id*.

50. Original dependent claim 16 was directed to the diffusion chamber having an axial portion and a transverse portion to interrupt and redirect the flow of fluid dispersion. *Id*.

51. Following Applicant's response, the Examiner issued a Notice of Allowance and the Application ultimately issued as U.S. Patent No. 9,126,215 ("the '215 Patent"). *Id*., pgs. 105-109.

52. The Examiner did not issue any prior art rejections in the '650 Application, and instead only issued a double-patenting rejection over the '215 Patent. *See* EX1004, pgs. 68-71. The '650 Application matured into the '094 Patent after Applicant filed a Terminal Disclaimer with respect to the '215 Patent. *Id*., pages 79-80, 91-97.

C. Summary of the '094 Patent

53. The '094 Patent is directed to a fluid dispersion assembly that is powered by compressed air and designed to deliver fluids, such as fragrant oils and essential oils, into the air. EX1001, 1:20-31. The '094 Patent relates to fluid dispersion assemblies designed to reduce the amount of noise generated during operation. EX1001, Abstract. The '094 Patent further relates to fluid dispersion assemblies with a diffusion unit in fluid communication with a fluid container and powered by a compressed air source. EX1001, Abstract.

54. The diffusion unit at least partially defines a diffusion chamber and includes a diffusion assembly containing an atomizer assembly which, in combination with the diffusion chamber, generates a fluid dispersion from a mixture of compressed air and an operative fluid, such as fragrant oils, essential oils, odor

neutralizers, air sanitizers, and the like. EX1001, Abstract. "The diffusion chamber is structured so as to facilitate formation of a fluid dispersion comprising a plurality of substantially uniform droplets prior to discharge from the diffusion chamber." EX1001, 1:53-57.

55. The '094 Patent states that "there is a need for a fluid dispersion assembly that is designed to reduce the amount of noise generated during operation." EX1001, 1:32-34. The '094 Patent additionally contends that the fluid dispersion assembly should operate quietly while generating a fluid dispersion having a "uniform particle size distribution" such that dosing of an airspace with a particular liquid can be predicted within acceptable limits. EX1001, 1:32-40.

56. In one claimed embodiment, the diffusion unit includes a suppressor or silencer assembly to reduce the amount of noise generated during operation. EX1001, Abstract.

57. In another embodiment of the invention, a modified diffusion chamber is provided to function as a suppression chamber and reduce the noise generated during operation of the assembly. EX1001, Abstract.

58. Figures 1-3 and 5 illustrate the claimed assembly for fluid dispersion. EX1001, Figures 1-3, 5; 2:66-8:4.

59. Figure 1 illustrates the fluid dispersion assembly 10, which "includes a diffusion unit 100 having oppositely disposed ends," and which "at least partially defines a diffusion chamber 112." EX1001, 3:2-25.

60. "The diffusion chamber is structured so as to facilitate formation of a fluid dispersion comprising a plurality of substantially uniform droplets prior to discharge from the diffusion chamber." EX1001, 1:53-57.

61. "As illustrated in FIGS. 1 and 3, the diffusion assembly 200 comprises an air inlet 210 and an atomizer assembly 220." *Id.*, 5:5-6. "The atomizer assembly 220 comprises an atomizer air inlet channel 222, a mixing chamber 226, and an atomizer exhaust channel 228." *Id.*, 5:7-9. "The atomizer air inlet channel 222 is interconnected to the compressed air source via the air inlet 210." *Id.*, 5:9-11. "[T]he mixing chamber 226 comprises a fluid inlet 227 disposed in fluid communication with an operative fluid in the fluid container (FC) via a fluid delivery tube 300." *Id.*, 5:24-26.

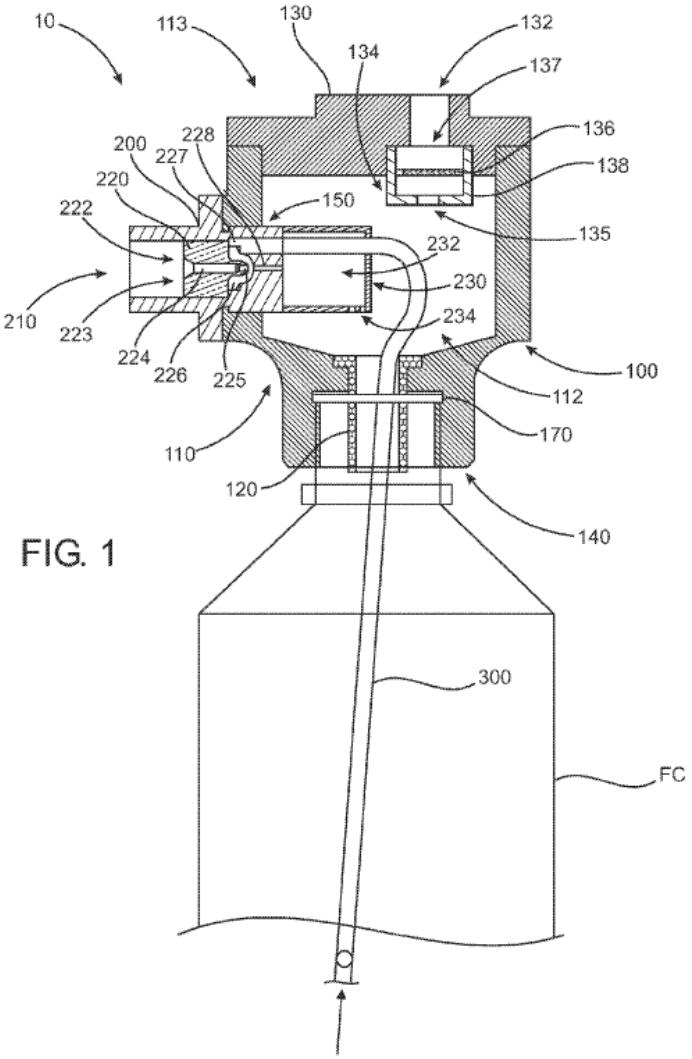

EX1001, Fig. 1

62. Figure 1 above and Figure 2 below show that "the fluid inlet 227 is substantially perpendicular to a compressed air flowpath through the atomizer assembly 200." EX1001, 5:34-36, Figures 2 and 3.

63. Figures 1 and 3 illustrate the diffusion assembly 200 comprising an air inlet 210 and an atomizer assembly 220. "The atomizer assembly 220 comprises an atomizer air inlet channel 222, a mixing chamber 226, and an atomizer exhaust

channel 228. The atomizer air inlet channel 222 is interconnected to the compressed air source via the air inlet 210. Moreover, the atomizer air inlet channel 222 may also include an inlet aperture 223, a first portion 224 and a second portion 225. The first portion 224 and the second portion 225 are collectively structured to facilitate delivery of compressed air into the mixing chamber 226." EX1001, 5:5-23.

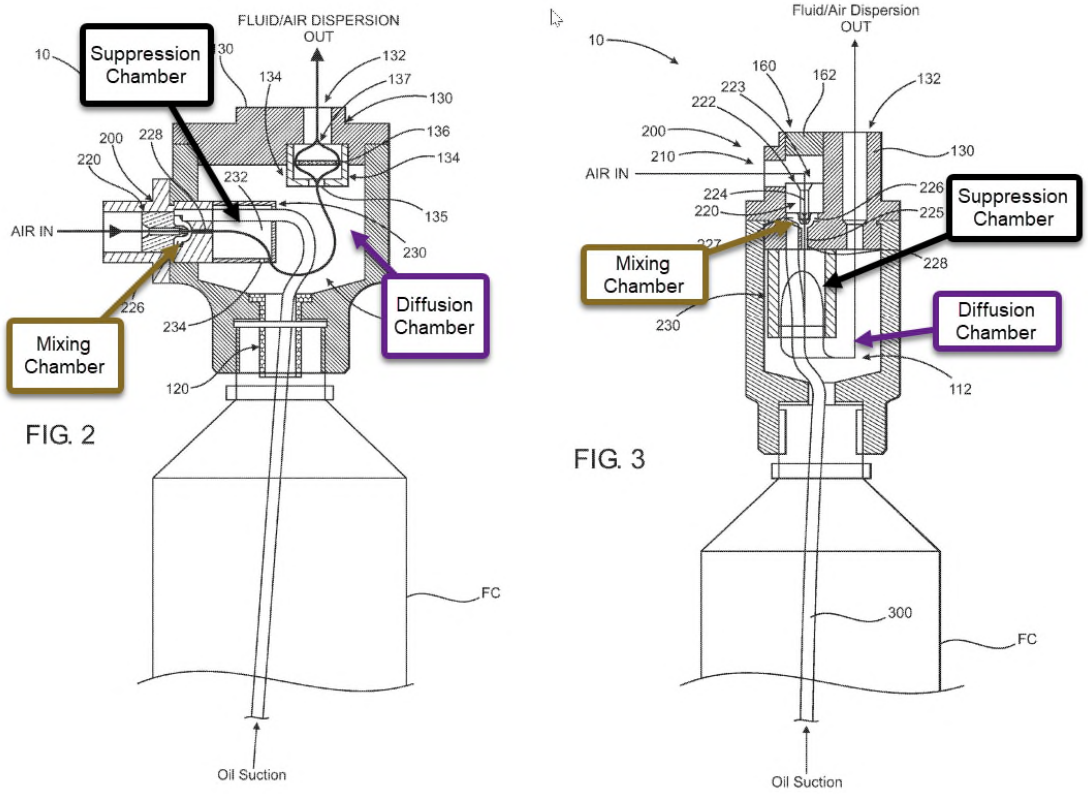

EX1001, FIGS. 2 and 3 (Colorized and Annotated)[1]

64. Figures 1 and 2 further illustrate another claimed embodiment wherein the fluid dispersion assembly 10 includes a silencer assembly 134 in communication with the discharge port 132. "The silencer assembly 134 serves to further minimize

[1] All annotations in this Declaration reflect my opinions and were prepared with the assistance of Petitioner's counsel to help visualize my opinions.

the amount of noise generated during operation of the fluid dispersion assembly 10." EX1001, 7:52-55.

65. "The silencer assembly 134 comprises a baffle 136 disposed in a silencer chamber 138 between a silencer inlet 135 and a silencer outlet 137. The baffle 136 is structured and disposed to further disrupt the flow of the fluid dispersion." EX1001, 7:55-59.

66. In an alternative embodiment, shown in FIG. 5, the diffusion chamber 112' is structured in an "upside down L-shaped configuration" forming an "axial portion 114" and a "transverse portion 115." EX1001, 7:1-12.

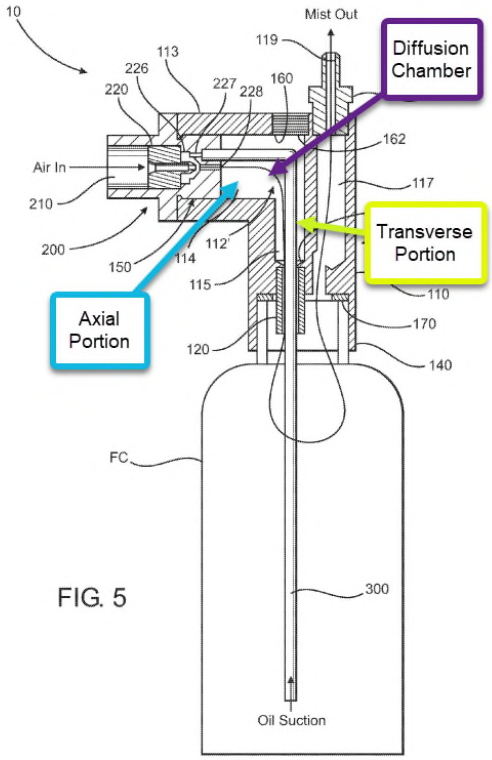

EX1001, FIG. 5

102516241.3

67. Accordingly, "fluid dispersion discharged … into diffusion chamber 112' *is interrupted and redirected* by virtue of axial portion 114 and transverse portion 115 … [and] serves to suppress or dampen sound waves generated therein, in a similar manner as the suppression chamber 232 of the previously disclosed embodiments." EX1001, 7:24-37 (emphasis added).

68. In yet another embodiment, and in addition to the suppression chamber, the fluid dispersion assembly 10 "*further* includes a silencer assembly 134 in communication with the discharge port 132, such as is illustrated in FIGS. 1 and 2." EX1001, 7:49-52 (*emphasis added*).

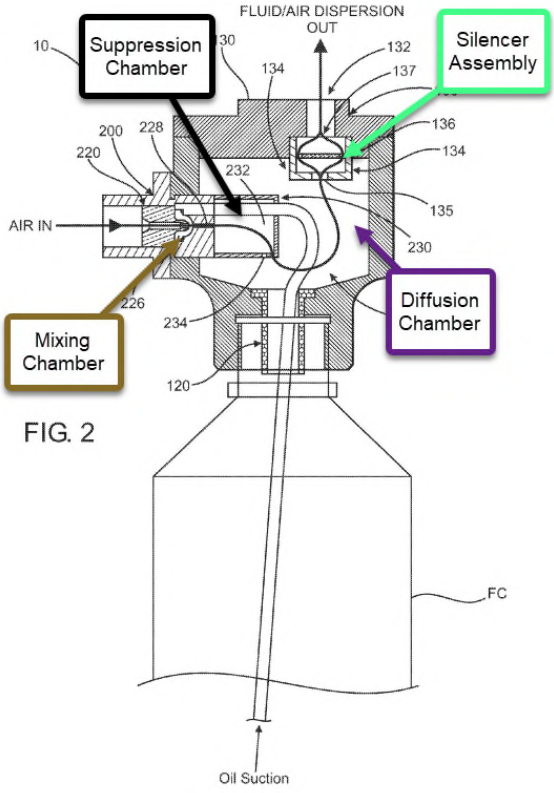

EX1001, FIG. 2

102516241.3

69. “The silencer assembly 134 comprises a baffle 136 … structured and disposed to further disrupt the flow of the fluid dispersion through the fluid dispersion assembly.” EX1001, 7:55-59. “Once again, as disclosed above with regard to the suppressor assembly 230, *the disruption in the flow of the fluid dispersion through the silencer assembly 134 also creates a disruption and dampening of the sound waves associated therewith*.” EX1001, 7:64-8:2 (emphasis added).

70. Thus, the ’094 Patent purports to address the “need for a fluid dispersion assembly that is designed to significantly reduce the amount of noise generated during operation,” and the “further need … for such a fluid dispersion assembly … to operate quietly while generating a fluid dispersion in air having a uniform particle size distribution, such that dosing of an airspace with a particular liquid, whether it be oil, sanitizer, disinfectant, etc., can be predicted within acceptable limits.” EX1001, 1:32-40. The ’094 Patent discloses various features that are designed to disrupt the flow of fluid dispersion and, as a result, reduce sound waves, including: (1) the suppression assembly 230; the L-shaped diffusion chamber 112'; and (3) the silencer assembly 134. That is, the ’094 Patent explicitly teaches that the silencing effect, or the reduction in noise, is a byproduct of the disruption in the flow of fluid dispersion.

71. I note that the suppressor assembly and/or the L-shaped diffusion chamber are required by claims 1-6, 10, and 14-20 of the ’094 Patent. None of these claims were asserted in the ongoing litigation between Patent Owner and Petitioner and are not challenged in this IPR. I note that neither of these features are included in the challenged claims of the ’094 Patent. Notably, claim 7, the sole independent claim being challenged in this Petition, does not require both a “suppressor assembly” and “a silencer assembly”, as was required by dependent claim 8 of the ’364 Application, which later matured into claim 4 of the ’215 Patent. Instead, claims 7-9 and 11 of the 094 Patent recite “a silencer assembly” but do not recite a “suppressor assembly.”

VI. OVERVIEW OF STATE OF THE ART

72. Before providing a detailed analysis of how the prior art discloses or teaches the limitations of the challenged claims, I provide a brief summary of the state of the art and the individual prior art references. As summarized below, the subject matter described in the ’094 Patent was well-known in the scientific literature at the time of the alleged invention.

A. Summary of the State of the Art and Knowledge of POSITA

1. Fluid Dispersion Assemblies

73. Fluid dispersion in general and in the context of the ’094 Patent refers to the mixing of at least two fluids, which takes place when one fluid displaces

another. Fluid dispersion may be caused by molecular diffusion or by macroscale mixing due to random and chaotic time dependent motions of the bulk flow.

74. In general, a dispersion is a mixture where one substance (the dispersed phase) is distributed as small particles, bubbles, or droplets throughout another substance (the continuous phase). *See, e.g.*, EX1020, pg. 110 ("dispersion"). A suspension is a mixture of solid particles or liquid droplets suspended in a fluid, a subset of a dispersion. *See, e.g.*, *id.* pg. 368 ("suspension"). Sufficiently large particles will sediment out of the suspension under the influence of gravity. *See, e.g.*, *id.* Small colloidal particles will remain suspended for long times. An aerosol is a dispersion of droplets or particles colloidal in size dispersed within a gas. *See, e.g.*, *id.* pg. 7 ("aerosol").

75. A homogenous suspension exists when solid particles or liquid droplets are distributed uniformly within the continuous phase. *See, e.g.*, *id.* pg. 240 ("mixture"). What this means is that any sample taken from this system is fully representative of the suspension. *See generally, e.g.*, EX1038. In principle, a homogenous suspension exists only for small uniform particle or droplet size. *See generally, e.g.*, *id.* For polydisperse non-Brownian particles, differences in sedimentation and inertia cause particle size segregation, leading to a non-uniform distribution. *See generally, e.g.*, *id.* Similarly, for Brownian particles, variations in

diffusion due to Brownian motion result in size segregation and a non-uniform distribution. *See generally, e.g., id.*

76. Fluid dispersion assemblies have been used for decades, if not longer, to disperse deodorizing fluids, such as fragrant oils, essential oils, and the like, into a generally enclosed airspace. *See, e.g.*, EX1021. For example, Dupuy, filed on March 29, 1944, teaches an apparatus to treat air by adding water and other volatile liquid vapors into the surrounding airspace for humidification, deodorization, sterilization, medication and the like. EX1021, 1:1-5. Dupuy discloses a fluid dispersion assembly that is interconnected to a container of a body of liquid and an air source, such as a blower or pump. Figure 1 of Dupuy illustrates the air treating apparatus with air being added through air inlet pipe 15.

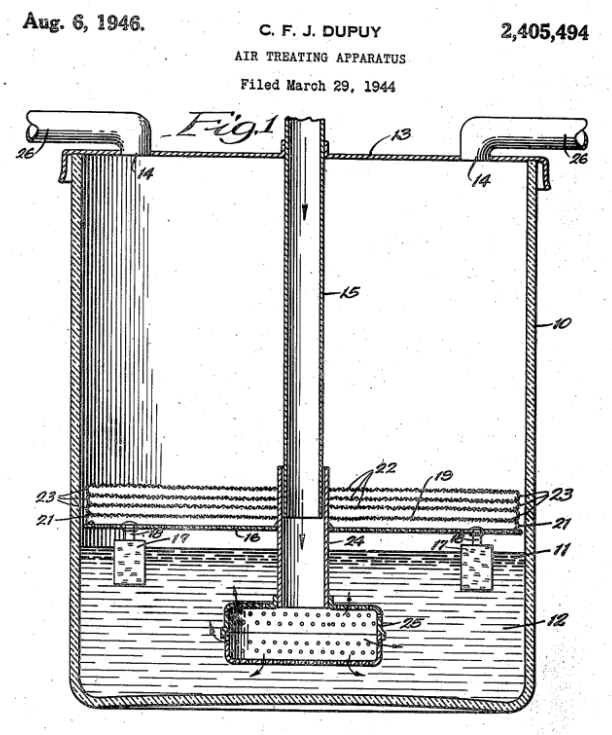

EX1021, Fig. 1

77. A 2004 publication by Joseph Kaye explains that, "[f]undamentally, there are only a few methods to get scent into the air from a source." EX1022, pg. 53. "To produce the greatest amount of scent diffused in the shortest period of time, one method is to spray the actual liquid scent into the air, in a manner similar to that of an airbrush, using a supply of compressed air to provide the impetus." *Id.*, 54. Kaye explains that such an approach was already "in use in prototypes built by British Telecom, and was used in the inStink project at the MIT Media Lab." *Id.* Such a device using a source of compressed air "is easy to build". *Id*. Kaye identifies several other technologies for emitting a scent, and further explains that "[w]hen scenting larger spaces, it can be useful to incorporate a scent output device based on one of the foregoing [technologies] into the air conditioning or ventilation system of the space to be scented." *Id.*

78. In short, fluid dispersion assemblies have long been known and used to scent the air in enclosed spaces, and such assemblies have long been powered by compressed air.

2. Dampening Sound Waves in Fluid Dispersion Assemblies

79. Dampening sound waves has long been a common consideration in air dispersion and diffusion assemblies. *See, e.g.*, EX1023. Air dispersion and diffusion assemblies patented as early as the 1950's contemplate novel ways "to provide an

improved air outlet device [or diffuser] which is constructed and arranged in such a manner as to minimize the generation of objectionable noises upon the discharge of the air therethrough." *See, e.g.*, EX1023, 1:20-29 (explaining that it is desirable to provide diffusion devices with "means by which the noise conditions are materially reduced and to an extent where the noise is relatively negligible"). Inventors in the field of air diffusion and dispersion assemblies explored concerns of "noise and vibration due to air impact" and sought to address the problem by using structural components selected specifically to minimize noise. *See, e.g.*, *id.*, 2:5-9.

80. A common solution for dampening sound waves is through the use of a baffle. One solution patented in 1958 was a "baffle or deflecting wall" intended to limit "the turbulence of the air stream and materially reduce[] the noise level of the device." *Id.*, 3:3-5. "By the employment of a perforated semi-circular wall or baffle, a substantially similar channeling action is attained for the air flow as would be secured by an imperforate plate, but by the use of a perforated wall or baffle, the sound waves are permitted to pass through such wall or baffle and become absorbed by the sound absorbing material located behind the baffle." *Id.*, 3:5-12.

81. Additionally, another patented technology of the 1990's introduces "[a] noise reducing diffuser which reduces the sound energy created by a pressurized gas while it is being expelled through a nozzle." EX1024, Abstract. Awad's "diffuser consists of an elongated enclosure with openings at each end that is attached to the

output of the gas nozzle. The dimensions of the enclosure, particularly its distance from the sound source, effective diameter and length, are chosen to specifically eliminate audible noise created by the escaping gas by conversion of a portion of the longitudinal component of the sound energy to an increased radial component that can be dissipated by repeated contact with the wall of the elongated enclosure." *Id.*

82. Further, "[p]revious systems have employed techniques such as mufflers, where baffles extend into the path of the sound waves, in an effort to reduce noise." *Id.*, 1:31-33. "Upon contact with the baffles, the sound waves lose some of their energy, which the baffles dissipate through vibrating." *Id.*, 1:33-35.

83. In addition, it was long known that an "orifice baffle plate", containing one or more orifices, creates a pressure drop, redirects flow, conditions flow, suppresses upstream turbulence, enhances local mixing, and suppresses downstream turbulence. *See generally, e.g.*, EX1025.

84. A POSITA at the time of the invention of the '094 Patent would also be familiar with the concept of flow noise, defined as sound generated aerodynamically, which is a by-product of an airflow and distinct from sound produced by the vibration of solids. A generalized theory of flow noise was derived in 1952. *See generally* EX1026. This theory published by Lighthill in Exhibit 1026, states that "[p]hysically, the mechanism of conversion of energy from kinetic to acoustic is based on fluctuations in the flow of momentum across fixed surfaces."

EX1026, Abstract. A POSITA would know that flow noise depends on flow turbulence, where turbulence can be colloquially characterized by flow irregularity or randomness producing three-dimensional velocity fluctuations, stresses, and forces. A POSITA would understand that strategies that reduce flow turbulence also reduce flow noise.

85. A POSITA would be aware of strategies used to control flow noise: "The noise generated by air/gas handling/consuming equipment, such as fans, blowers, and internal combustion engines, is controlled through the use of two types of devices: (1) passive silencers and lined ducts whose performance is a function of the geometric and sound-absorbing properties of the their components and (2) active noise control silencers whose noise cancellation features are controlled by various electromechancial feed-forward and feedback techniques." EX1027, 279-280.

86. The silencer assembly described in the '094 Patent serves as a combination reactive and dissipative silencer that contains elements of an expansion chamber muffler and perforated muffler and reduces flow generated noise using flow resistance as described in the Noise Control Book. *See, e.g.*, EX1027, 286 ("These silencers reduce the radiated acoustical power primarily through impedance mismatch, that is, through the use of acoustical impedance discontinuities to reflect sound back toward the source. In essence, the more pronounced the discontinuities, the higher the amount of reflected power. Acoustical impedance discontinuities are

commonly achieved through (a) sudden cross-sectional changes (i.e., expansions or contractions), (b) wall properties changes (i.e., transition from a rigid-wall pipe to an equal diameter absorbing wall pipe), or (c) any combination thereof.”).

87. A POSITA would know that acoustical impedance discontinuities and flow resistance can be achieved by a tortuous flow path using flow obstructions such as baffles, perforated plates, or honeycomb-like structures. Flow obstructions in the ’094 Patent and asserted prior art references constitute perforated-element mufflers as described in the Noise Handbook. EX1027, 301.

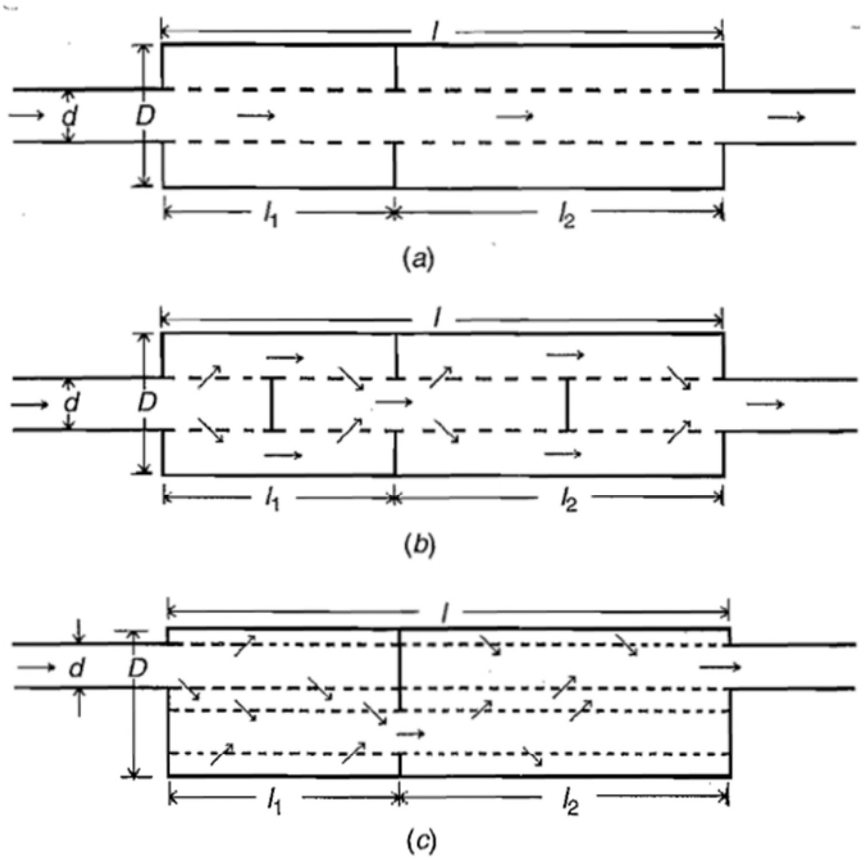

FIGURE 9.11 Schematic of the two-chamber configurations of three types of perforated-tube mufflers: (*a*) Concentric-tube resonator; (*b*) plug muffler; (*c*) three-duct cross-flow muffler.

EX1027, Figure 9.11

88. A POSITA would know that flow obstructions such as baffles, perforated plates, or honeycomb-like structures will reflect most and absorb some of the source-generated sound. Further, a POSITA would know that flow obstructions cause flow restrictions (*i.e.*, a pressure drop) that reduces turbulence and flow-generated noise.

89. A POSITA would also know that by splitting a passage or chamber into smaller sections with reduced width, "low frequency performance may be significantly improved." EX1037, 115.

90. The foregoing designs and teachings of the 1950's – 1990's added advantages to air dispersion assemblies and would have been well known to those of skill in the art at the time of the invention of the '094 Patent.

3. Uniform Droplets in Fluid Dispersion

91. It has long been known in the field of fluid dispersion that there are advantages to producing small and substantially uniform droplets in various fluid dispersion applications. For example, it is advantageous to have small and substantially uniform droplets in fluid dispersion assemblies used to deodorize an enclosed area because, all else being equal, uniform dispersion of aroma is a function of droplet uniformity.

92. More specifically, it is advantageous to have small and uniform droplets after discharge from a fluid dispersion assembly into the surrounding airspace because small droplets will follow the air flow in the room and spread more quickly and uniformly. In addition, uniform droplets will evaporate at the same rate after discharge. Thus, when the droplets are small and uniform, they provide a more evenly distributed and more quickly dispersed odor.

93. In the context of the ’094 Patent, “fluid dispersion” is defined to “mean a mixture of an operative fluid in air comprising a plurality of substantially uniform droplets of the operative fluid dispersed throughout the air.” EX1001, 3:8-12. Further, the ’094 Patent defines “substantially uniform droplets” as “droplets having substantially the same diameter. In at least one embodiment, the plurality of ‘substantially uniform droplets’ each have a diameter in the range of about one micron (1 μm), in another embodiment, the diameter of the droplets is in the range of about three microns (3 μm), and, in one further embodiment, droplet diameter is in the range of about five microns (5 μm).” EX1001, 3:12-18.

94. “[T]he instability and breakup of liquid jets into drops,” as is generally discussed and claimed in the ’094 Patent, “has been a subject of interest since the early nineteen century and has continued to this date.” EX1028, 3-4.

95. The Handbook of Exhibit 1028 provides sufficient information such that a POSITA would know how to design a diffusion chamber to facilitate the formation of a plurality of substantially uniform droplets, as defined in the ’094 Patent. For example, the Handbook describes a twin-fluid nozzle: “In these nozzles a high velocity gas stream is brought in contact with a liquid stream.” EX1028, pg. 500. The Handbook further describes that some twin-fluid nozzles use the venturi effect: “The siphon principle is also used in some twin-fluid atomizing nozzles where the liquid source is self-aspirating.” *Id.*

96. The Handbook describes that "gas and liquid can be brought in contact either within the nozzle (internal mix) or outside of the nozzle (external mix). In addition, nozzles can be categorized based on the flow rate of the atomizing gas and the way the gas is brought in contact with the liquid." *Id.*, 501.

97. The Handbook describes that some twin-fluid nozzles use a mixing chamber: "A typical effervescent atomizer [a twin-fluid nozzle type] is shown in Fig. 24.21. It consists of liquid and gas supply ports, a mixing chamber where the gas is bubbled into the liquid stream and an exit orifice." *Id.*, 515.

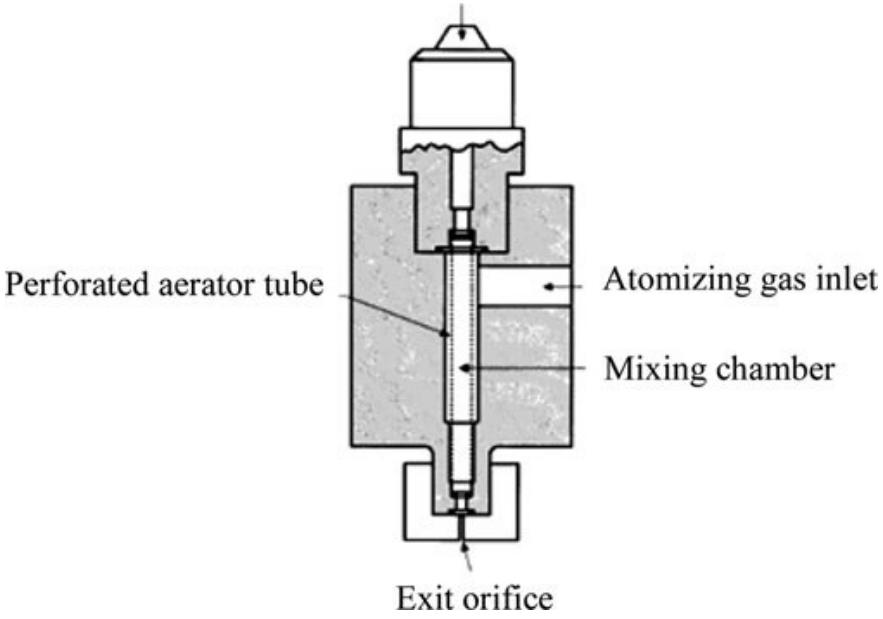

EX1028, Fig. 24.21 Schematic design of a typical effervescent atomizer

98. The Handbook also describes that baffles strategically placed within the diffusion chamber (*See* Fig. 41.3) can be used with twin-fluid nozzles to (a) produce smaller droplets, (b) restrict movement of the fluid dispersion, (c) filter out large droplets from the fluid dispersion: "In a typical design, a converging nozzle

accelerates the air to high speed. This air then flows across water in the primary droplet production region, which induces viscosity-induced instabilities at the air–water interface whose subsequent nonlinear growth leads to primary production of droplets [3]. These droplets are too large for inhalation into the lungs. Instead, they are entrained in the high speed airflow downstream of the nozzle and impact on a primary baffle, from which splashing occurs, resulting in the production of droplets with smaller sizes. Secondary baffles obstruct the flow on its way to the mouthpiece and cause further size reduction by inertial impaction of droplets which then return to the reservoir for subsequent reaerosolization." EX1028, 903.

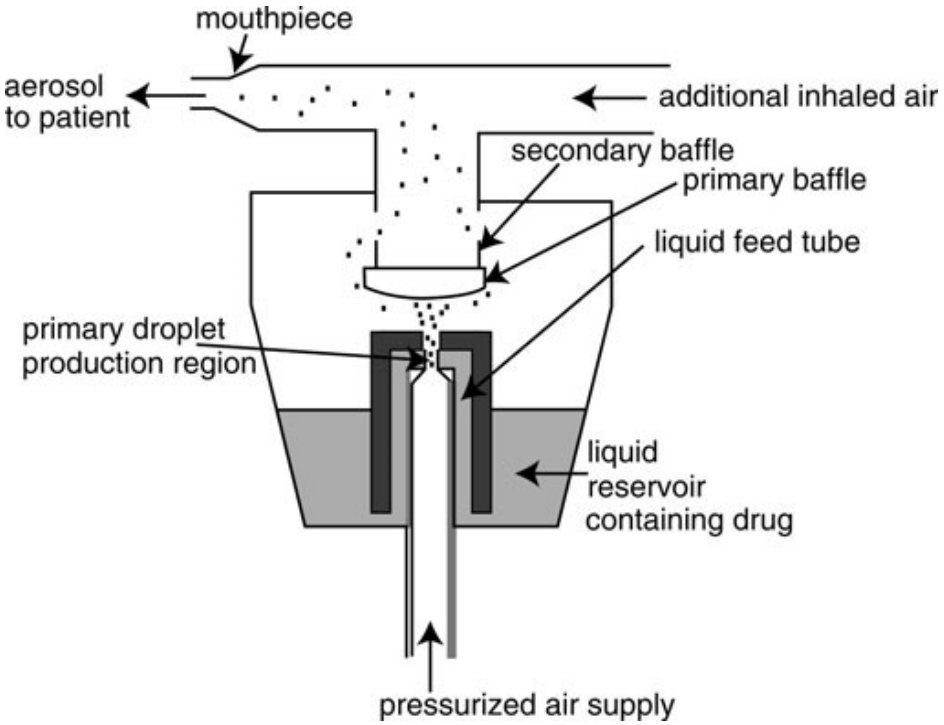

EX1028, Fig. 41.3 (Schematic of jet nebulizer)

99. A POSITA would know that droplet separation methods like that disclosed in the ’094 Patent and the asserted prior art references for removing large diameter liquid droplets of the operative fluid from the air stream have long been used in industrial, manufacturing, environmental, and healthcare applications. *See generally*, *e.g.*, EX1029 (“The Perry Handbook”).

100. The Perry Handbook describes droplet separation mechanisms relevant to the ’094 Patent and asserted prior art references including gravity settling and inertial impaction. *See* EX1029, pg. 27 (14-84). The latter “employs direct impact and inertial forces between particles, the gas streamlines, and target bodies to provide capture.” *Id.*

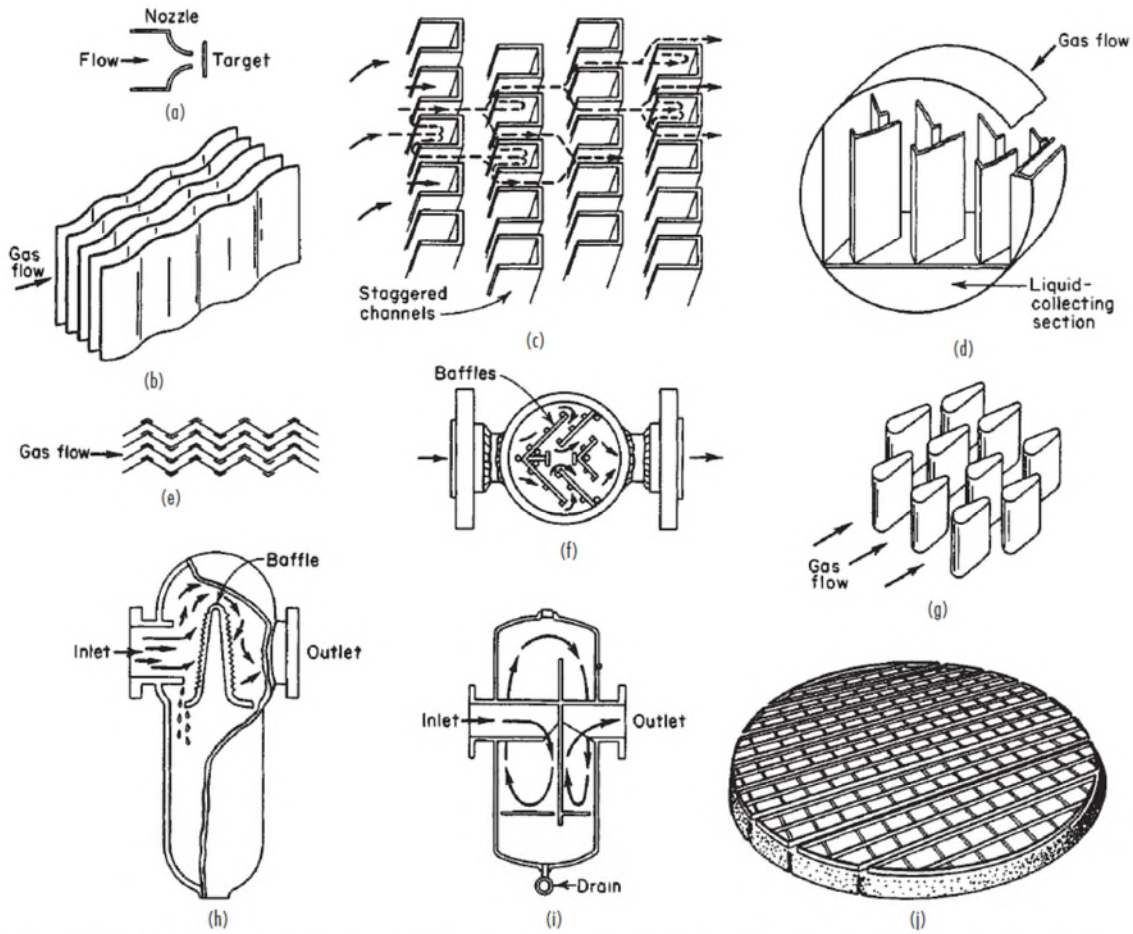

FIG. 14-110 Typical impingement separators. (*a*) Jet impactor. (*b*) Wave plate. (*c*) Staggered channels. (*Blaw-Knox Food & Chemical Equipment, Inc.*) (*d*) Vane-type mist extractor. (*Maloney-Crawford Tank and Mfg. Co.*) (*e*) Peerless line separator. (*Peerless Mfg. Co.*) (*f*) Strong separator. (*Strong Carlisle and Hammond.*) (*g*) Karbate line separator. (*Union Carbide Corporation*) (*h*) Type E horizontal separator. (*Wright-Austin Co.*) (*i*) PL separator. (*Ingersoll Rand.*) (*j*) Wire-mesh demister. (*Otto H. York Co.*)

EX1029, FIG. 14-110

101. The Perry Handbook states that, "[p]article collection as a function of size may be estimated by using the target-efficiency correlation in Fig. 17-39 [below]. Since target efficiency will be low for systems with separation numbers below 5 to 10 (small particles, low gas velocities), the mist will frequently be subjected to a number of targets in series as in Fig. 14-110c, d, and g." EX1029, pg.

27 (14-84). $D_{p,th}$ is the droplet diameter with a 50% collection efficiency and a function of separator size, gas velocity, viscosity, and droplet density. *Id.*

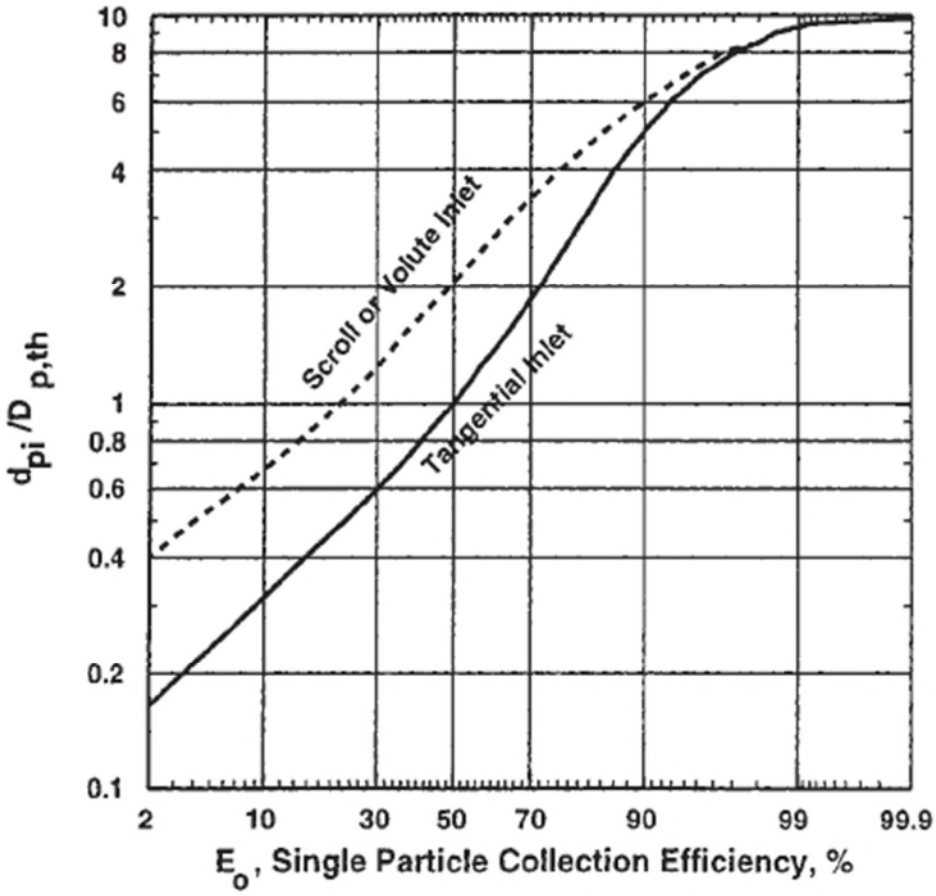

FIG. 17-39 Single particle collection efficiency curve. (*Courtesy of PSRI, Chicago.*)

102516241.3

EX1029, FIG. 17-39

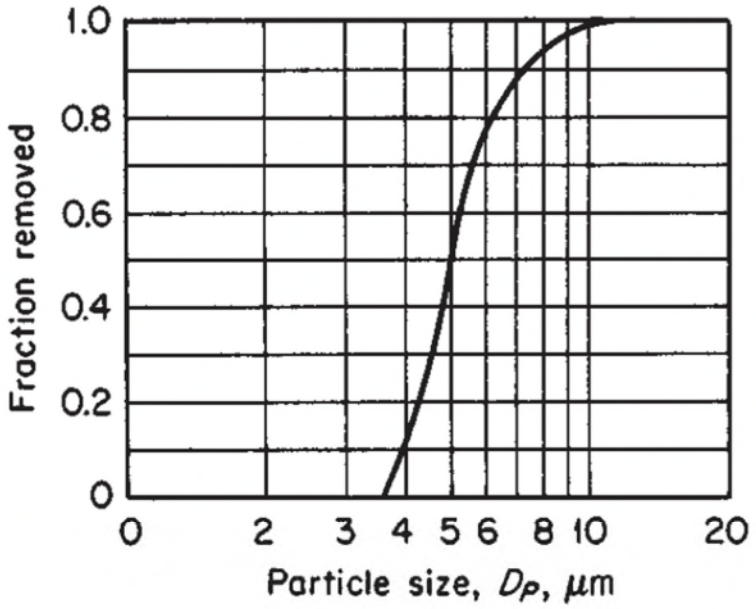

FIG. 14-114 Collection efficiency of Karbate line separator, based on particles with a specific gravity of 1.0 suspended in atmospheric air with a pressure drop of 2.5 cm water gauge. (*Union Carbide Corporation Cat. Sec. S-6900, 1960.*)

EX1029, FIG. 14-114

102. A POSITA would also know that, relevant to inertial impaction separation processes, droplet impact on a solid surface results in either the formation of a liquid film on the solid surface or, for more energetic impacts, droplet breakup and the formation of smaller secondary droplets. *See generally, e.g.*, EX1030, Fig. 8

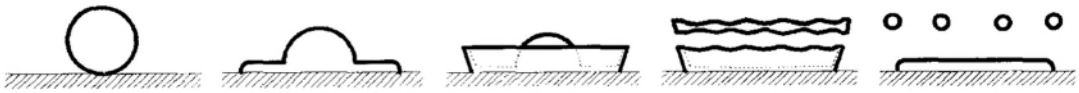

Figure 8. Schematic view of the splashing process.

EX1030, Fig. 8

103. In addition, a POSITA would know the control parameters governing the relative velocity between an atomized droplet and airflow. *See generally* EX1033. A POSITA would also know that droplet diameters less than 5 μm would follow the air flow in the room, i.e., the relative velocity (drift velocity) between an atomized droplet and the air flow is approximately zero. *See, e.g.*, EX1034, Fig. 3.

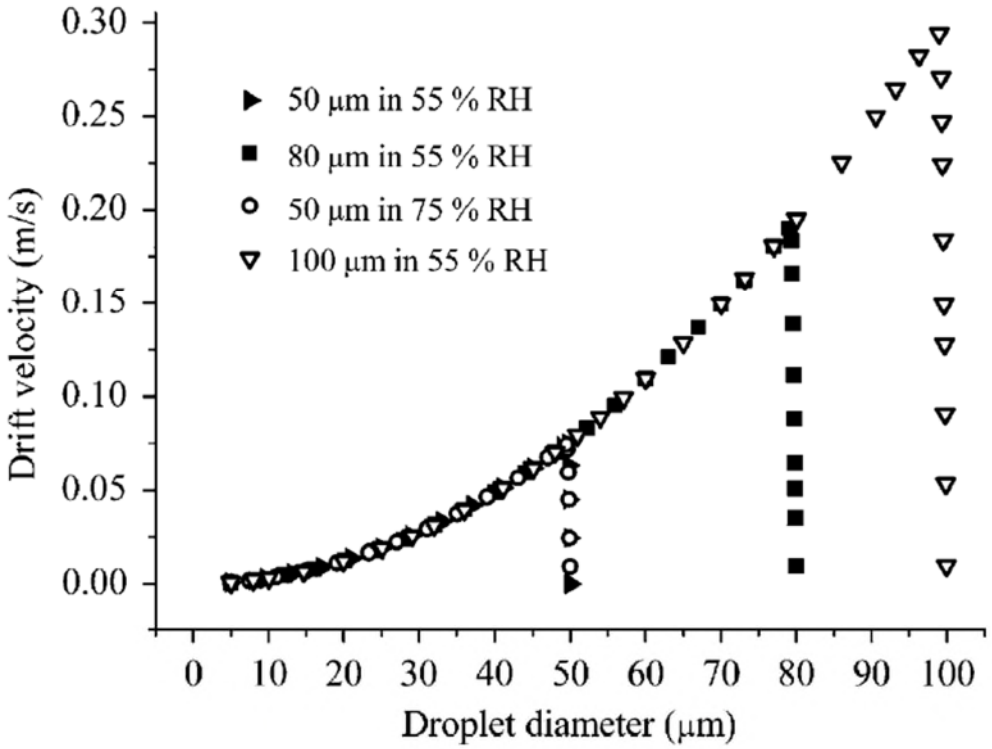

Fig. 3. Droplets drift velocity changes as the droplet diameter reduces from their different initial diameters in the 55% and 75% relative humidity (RH) air.

104. A POSITA would understand that smaller droplets will follow the air flow in the room and thus spread throughout the environment of a room more quickly. For example, Figure 4 of Exhibit 1034 shows smaller droplets without drift

velocity (aerosol particles) are more uniformly distributed in the room relative to larger droplets.

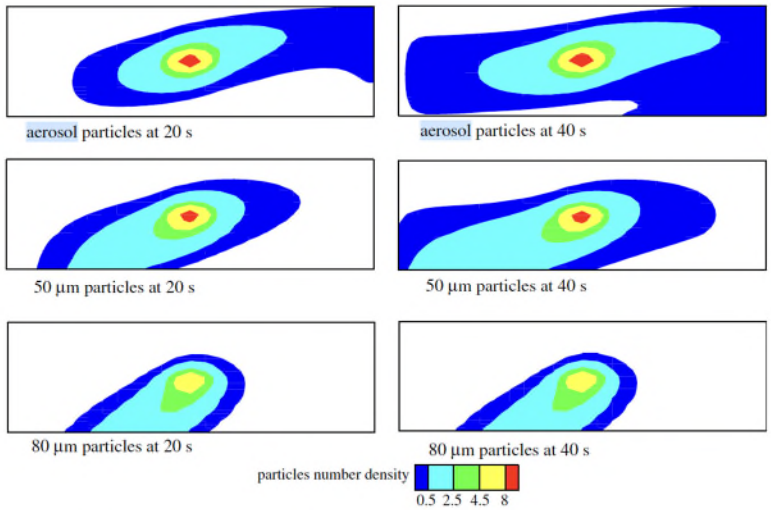

Fig. 4. Distribution of solid particles in the central X plane of the test room at 20 and 40 s after the particles are released at the room center. For top figures, "aerosol particles" refer to those neutral particles without gravitational settling.

EX1034, Fig. 4

105. Moreover, it has long been known that the evaporation rate of droplets depends on several factors including the size (*e.g.*, surface area) of the droplet. *See, e.g.*, EX1035, EX1036. A POSITA would know that the droplet evaporated mass rate is a quadratic function of the droplet diameter: $\frac{\partial m}{\partial t} = a_1 + a_2 d + a_3 d^2$

106. Where m is droplet mass, t is time, d is the droplet diameter and coefficients a_1, a_2, and a_3 depend on vapor pressure of material and local concentration.

107. Thus, a POSITA would understand that a "better atomization" in the context of the '094 Patent means a smaller and more uniform droplet, resulting in

droplets spreading more quickly throughout the room and evaporating at a uniform rate. A POSITA would also understand that spreading droplets more quickly and evenly throughout a room and allowing them to evaporate into vapor more quickly and at the same rate will result in a more consistent and evenly spread scent in the surrounding area.

108. In addition to the foregoing publications, there are numerous prior art references that disclose the use and creation of small and substantially uniform droplets in fluid dispersion assemblies.

109. For example, Chinese Patent No. CN 201832737 U to Xiaoyang Gao ("Gao"), titled Atomizer for Atomizing Essence or Essential Oil and published on May 18, 2011, discloses a fluid dispersion device that can effectively maintain the natural aroma of essence and essential oil; in addition, the atomized particles are finer and more uniform, the aroma is more uniform, and the aroma diffusion area is large. *See* EX1012 and EX1013, INID Codes (10), (45), (54), (57), (73).[2]

110. Gao teaches that the particles in fluid dispersion devices produced by the heating method are large and not uniform, and thus easily adhere to pipes and other objects. EX1013, ¶ [0004]. ("The particles produced by the heating method are large and not uniform, and they are very easy to adhere to the air conditioning pipes

[2] All citations to Gao herein are to the certified translation, EX1013, unless otherwise noted.

and other objects. As a result, the air conditioning filter may be blocked after a long time period of use.”).

111. Thus, an object of Gao is to provide an atomizer for atomizing essence or essential oil, “the atomizer adopts a cold atomization mode, does not require heating, can effectively maintain the natural aroma of essence and essential oil; in addition, the atomized particles are finer and more uniform, the aroma is more uniform, and the aroma diffusion area is large.” EX1013, ¶ [0007].

112. Gao teaches that the “finer the atomized particles, the more uniform the smell. When the atomized particles are ultra-fine mist, they will not adhere to the pipes and filters.” EX1013, ¶ [0015].

113. Figure 1 of Gao illustrates that the fluid dispersion is created in a diffusion chamber prior to discharge into the surrounding airspace.

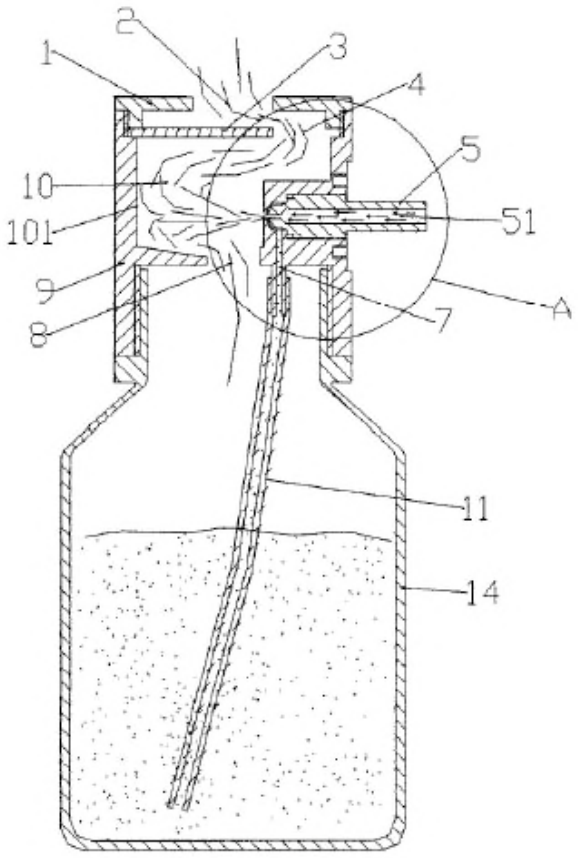

FIG. 1

EX1013, FIG. 1.

114. As another example, Sevy discloses "[a]n atomizer provides a control of duty cycle or a motor driving a diaphragm pump. By providing precise, high-speed flow through an eductor nozzle, improved atomization occurs." EX1009, Abstract. Sevy teaches an atomizer that "provides a better atomization or a smaller mean or average size of droplet in the distribution of atomized droplets compared with prior art devices capable of atomizing." EX1009, ¶ [0009]. Sevy's atomizer uses a separator that "separates the droplets by size, the smaller droplets moving with the air, and the larger ones drifting out or agglomerating at walls and other

obstructions. . . . Comparatively smaller droplets are passed from the atomizer out through the separator chamber and associated obstructions with the flow of air. The method simultaneously limits net outflow of the liquid and decreases mean droplet size." EX1009, ¶¶ [0014]-[0015].

115. As another example, Goubet discloses a "specific arrangement [for a] diffuser [that] enables the size of the oil microdroplets diffused into the ambient air to be reduced to a minimum."[3] EX1015 and EX1016, 2:4-6. "As a result, the oil mist diffused at the outlet of the diffuser is not harsh." EX1016, 2:6. "Furthermore, due to the fineness of the microdroplets, this mist is non-flammable." EX1016, 2:7. "The diffusion is controlled, gentle, and particularly quiet." EX1016, 2:8. Goubet's diffuser "may operate within a compressed air pressure range of 0.05 bar to 0.5 bar." EX1016, 2:13-14. "In particular, very low-pressure operation 15 significantly reduces the noise of the diffusion. . . . Thus, due to the particular circular shape and the specific arrangement of the inlet, passage, and outlet of the two enclosures, the droplets follow a very particular path, allowing their size to be reduced as much as possible and subsequently controlling their diffusion into the ambient air." EX1016, 2:14-29. "[T]his reduction in droplet size enables a non-harsh, highly atomized oil mist or vapour to be silently diffused." EX1016, 2:29-30.

[3] All citations to Goubet herein are to the certified translation, EX1016, unless otherwise noted.

116. As another example, Rajala discloses a "device and a method for producing nanoparticles, in which method starting materials for nanoparticles are mixed at least as liquid droplets and optionally also as gases and/or vapours with at least combustion gases in a premixing chamber and the mixture is separated for liquid drops larger than size d, whereafter the mixture is conducted to at least one burner, in which the combustion gases are ignited such that a heavily mixing flame is generated, in which the starting materials react and optional solvents evaporate and generate through nucleation and/or sintering and/or agglomeration particles having a diameter of 1 to 1000 micrometres." EX1007, Abstract. Rajala explicitly teaches "[r]elatively narrow size distribution (mono-dispersity), anti-agglomeration and homogeneity are required of the nanoparticles" in various applications. *Id.*, ¶ [0002].

117. As another example, Dorendorf (US 2009/0025794), which was also cited during prosecution of the '215 Patent, was published on January 29, 2009, and thus is prior art to the '094 Patent under 35 U.S.C. §102(b). EX1008. Dorendorf is directed to an ultra-low volume fluid delivery system and discloses "before the air travels to nozzle 15, the air can travel through a system of baffles 44 for additional noise dampening." EX1008, ¶ [0025] and FIG. 6 (reproduced below).

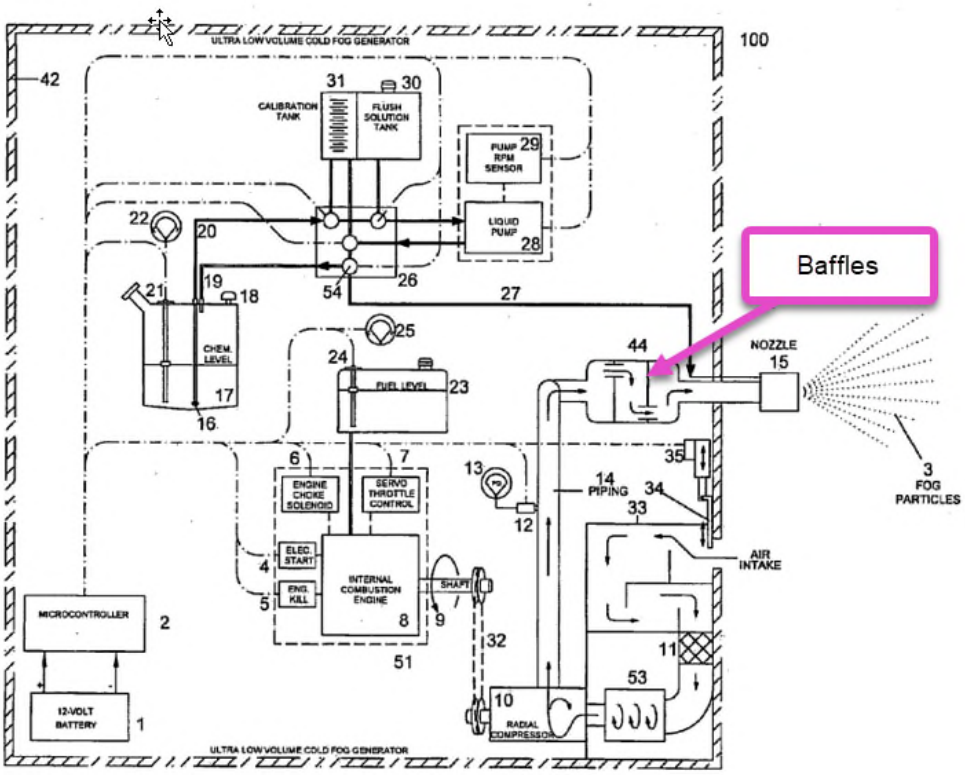

FIG. 6

118. In short, it was well known in the art that there are significant advantages to using small and substantially uniform droplets in fluid dispersion assemblies, and it was well known in the art how to produce such droplets in the manner disclosed in the ’094 Patent.

4. Venturi Effect

119. The Venturi effect is the reduction in fluid pressure that results when a moving fluid speeds up as it flows through a constricted section (or choke) of a pipe.

120. The fundamental physics describing the so-called “venturi-effect” referenced in the ’094 Patent (5:40-46) was derived by Daniel Bernoulli and first published in Bernoulli, D. (1738) Hydrodynamica, ETH-Bibliothek Zürich. *See*

generally EX1031. The derivation is known as Bernoulli's principle or Bernoulli's equation. Bernoulli's equation is taught in introductory fluid mechanics courses required by undergraduate mechanical engineering programs worldwide.

121. The venturi effect to aspirate fluid upward from a reservoir as described in the '094 Patent is covered, for example, in White, F.M. (1994), Fluid Mechanics (3rd Edition), New York, NY: McGraw-Hill Higher Education, Problem 3.161 (shown below). *See* EX1032; *see also* EX1001, 5:41-56 ("As such, when compressed air is supplied to the diffusion assembly 200, a corresponding amount of operative fluid is drawn into the mixing chamber 226 through the fluid delivery tube 300 as a result of the venturi effect of the compressed air flowing past the opening of the fluid inlet 227 into the mixing chamber 226.").

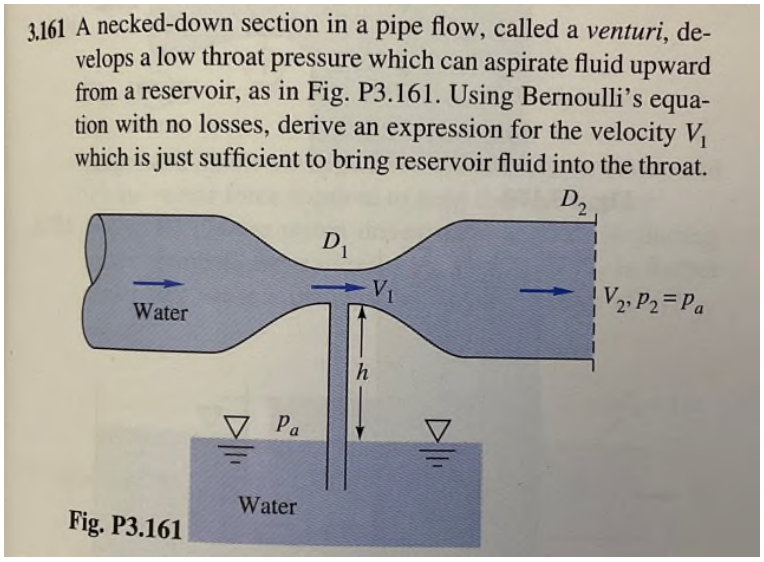

EX1032, Problem 3.161[4]

[4] Note that the variable form of the solution is independent of the choice of the aspirated fluid and the working fluid through the venturi. Such that the aspirated

122. Problem 3.161 is intended to be solved by either second- or third-year undergraduate mechanical engineering students enrolled in an introductory fluid mechanics course.

123. The solution to Problem 3.161 would provide the needed information for a POSITA to design a system such that "at each different compressed air flowrate, i.e., each 'predetermined amount' of compressed air which is dictated and fixed by a compressed air operating pressure supplied to diffusion assembly 200, a different corresponding and substantially constant amount, *i.e.*, a 'preselected amount' of an operative fluid corresponding to each different predetermined amount of compressed air, will be drawn into the mixing chamber 226." EX1001, 5:46-54.

5. Final Remarks

124. A POSITA would have been well aware of these concepts as of August 29, 2012, and they would have formed part of a POSITA's background knowledge. I have applied this background knowledge in providing my opinions below on what is obvious to a POSITA in view of the teachings of the prior art.

B. Summary of Asserted Prior Art References

1. Summary of Sevy

125. Sevy (US 2010/0084484) was published on April 8, 2010, and, thus, I understand is prior art to the '094 Patent. Sevy teaches an integrated, essential-oil

---

fluid can be chosen as fragrant oil and the fluid through the venturi can be chosen as compressed air.

atomizer. EX1009. The essential-oil atomizer of Sevy includes a separator plate 98 (*e.g.*, a baffle) defining apertures 99 for restricting droplets of a certain size, thereby limiting, or disrupting, the flow of fluid dispersion. *See* FIG. 9, and ¶ [0070]. A cross-section of Sevy's essential-oil atomizer with separator plate 98 is shown in FIG. 9 below.

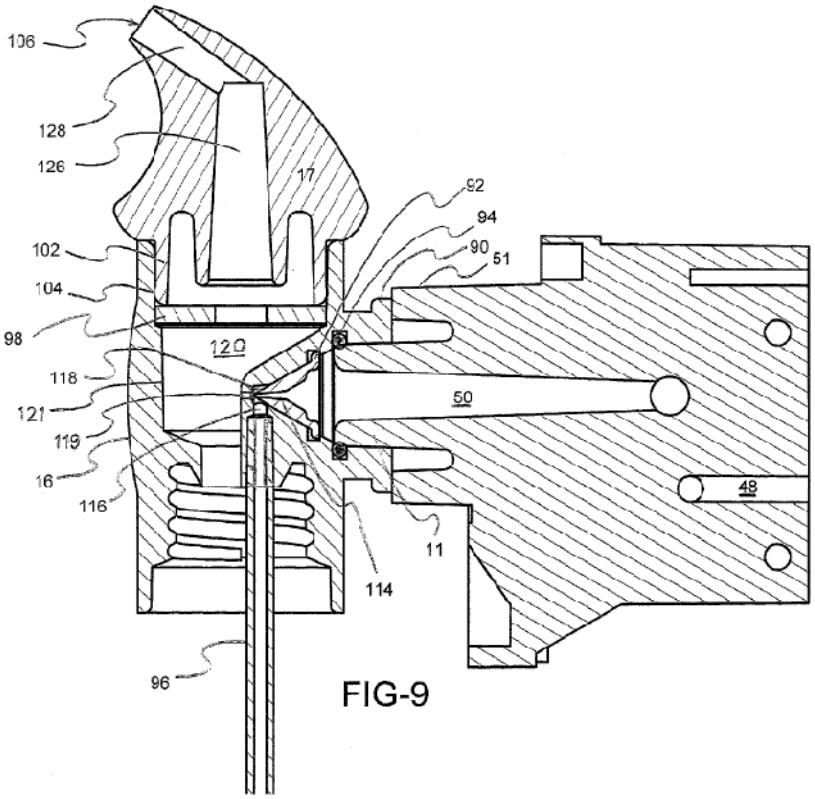

EX1009, FIG. 9

2. Summary of Goubet

126. French Patent FR2886160A1 to Didier Goubet ("Goubet") is titled Essential Oil Diffuser. EX1015, EX1016 (certified translation of Goubet), INID

Codes (54), (71). Goubet was published on December 1, 2006, and, thus, I understand is prior art to the ’094 Patent. EX1016, INID Code (43).

127. Goubet generally relates to an essential oil diffuser that uses the venturi effect to mix air and essential oil and create a flow of oil droplets that exit the diffuser and diffuse into the ambient air in the form of microdroplets. EX1016, INID Code (57). In particular, Goubet relates to a diffuser of essential oil comprising an oil tank, a diffuser head comprising a mixing chamber in which oil droplets are produced and which comprises an inlet of compressed air, a venturi cone, and an oil inlet. *Id.* The mixing chamber (referred to in Goubet as a diffusion chamber) is arranged to initially direct the flow of oil droplets created therein to the interior of the tank. *Id.* The diffuser head also comprises vaporization means arranged to break the oil droplets into smaller microdroplets and silently diffuse the microdroplets into the ambient air. *Id.*

128. Goubet teaches that the vaporization means comprise at least two concentric circular enclosures, an outer enclosure and an inner enclosure, communicating with each other via a passage. EX1016, 2:16-19. The chambers and the passage break the droplets into fine microdroplets and diffuse the microdroplets in the ambient air in the form of an oil vapor. EX1016, pg. 6 (claim 1).

129. The essential oil diffuser of Goubet includes a diffusion head defining an outer enclosure 12 and an inner enclosure 13 that communicate with each other

through a passage 14, which forms at least one baffle. *Id*. The configuration and communication forms a baffled path through which atomized droplets flow. EX1016, pgs. 4-5. The baffled path, as illustrated in FIGS. 2 and 3 below, breaks the atomized oil droplets into micro-droplets and diffuses the micro-droplets into ambient air. *Id.*, pgs. 4-5.

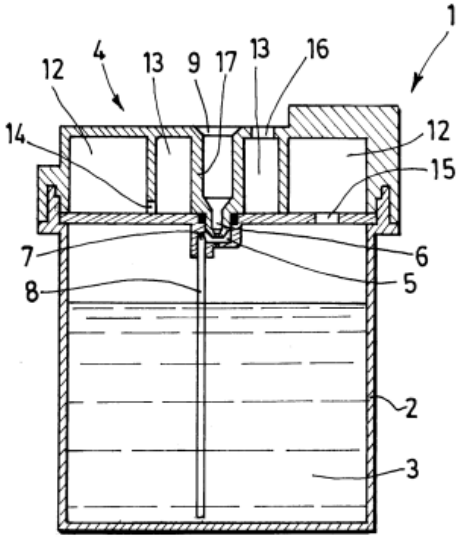

FIG.1

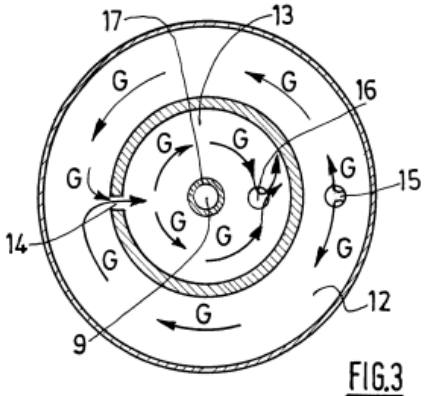

FIG.3

EX1016, FIGS. 1 and 3

130. Goubet addresses several problems faced by "[k]known essential oil diffusers … fitted with a diffuser head to which a compressed air supply is connected to trigger the diffusion." EX1016, 1:8-9.

131. For example, Goubet explains that "due to its pressurized state, compressed air generally arrives in the diffuser head rather abruptly, with the result

that a large quantity of oil droplets is rapidly and abruptly diffused into the ambient atmosphere under high pressure with no real control over this diffusion," and, moreover, "such diffusion is also noisy." EX1016, 1:10-13.

132. Goubet further explains that such "diffusion may be felt as harsh by those present and is detrimental to establishing a refreshing, relaxing atmosphere. In this way, the oil diffusion system and process run counter to the beneficial effects expected from the intrinsic properties of the oil itself." EX1016, 1:14-17.

133. Goubet addresses these problems by teaching "an essential oil diffuser which diffusion, although triggered by a compressed air supply, is controlled, in particular by enabling the oil to be diffused in the form of an oil vapour, for example in the form of particularly fine microdroplets." EX1016, 1:18-21.

3. Summary of Gao

134. Chinese Patent No. CN 201832737 U to Xiaoyang Gao ("Gao") is titled Atomizer for Atomizing Essence or Essential Oil. EX1012 and EX1013 (certified translation of Gao). Gao was filed on August 4, 2010, and published on May 18, 2011, and, thus, I understand is prior art to the '094 Patent. EX1013, INID Codes (22), (45), (54), (73).

135. Gao generally relates to the technical field of atomizers, in particular to an atomizer used for atomizing essence or essential oil. EX1013, ¶ [0001]. Gao relates to an atomizer for atomizing essential oil and includes a baffle plate 3, which

as shown below in FIG. 1, disrupts the flow of fluid dispersion prior to being discharged through outlet 2.

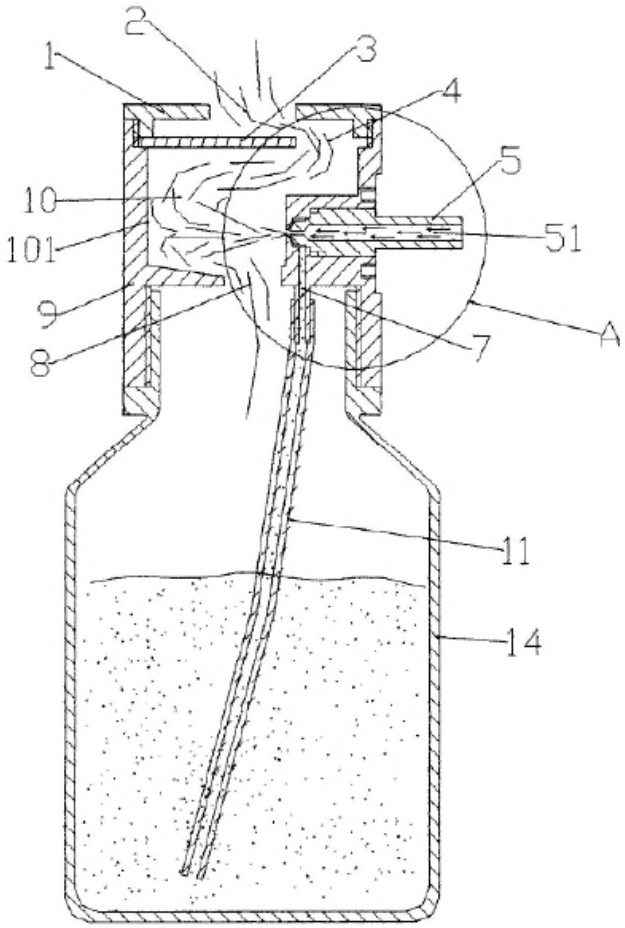

FIG. 1

EX1013, FIG. 1

136. More specifically, Gao teaches an atomizer for atomizing essence or essential oil, comprising (i) an atomizer body having a first cavity and a second cavity, (ii) an atomizing gas outlet on a top wall of the first cavity, (iii) a reflux hole on a bottom wall of the first cavity, (iv) a baffle on an upper part of the first cavity forming a top part cavity and a lower part cavity, (v) a through hole between the top

part cavity and the lower part cavity, and (vi) a gas flow spray hole on a side wall of the lower part cavity. EX1013, Abstract.

137. Gao further teaches that "the lower part cavity is in communication with a bottom part of the second cavity through the gas flow spray hole, a gas flow nozzle is fixed in the second cavity, a gap is arranged between the gas flow nozzle and a bottom wall of the second cavity, an atomizing cavity is formed between the gas flow nozzle and the bottom wall of the second cavity, a liquid pipe is further provided on the atomizer body, and the liquid pipeline is in communication with the atomizing cavity." EX1013, Abstract. Gao teaches the need for providing a fresh and natural scent to enclosed areas, and discusses several existing devices, including those that use a heating method to gasify essence and essential oil, those that air to atomize fluids, and those that use a small essential oil atomizer. EX1013, ¶ [0002].

138. Gao explains some of the disadvantages with these existing technologies. For example, Gao explains that, in the case of using electric heating, the essences or essential oils may differ in smell from their original scent because of the heating process, and the heating of some oils may generate harmful gasses if overheated. EX1013, ¶ [0004]. Moreover, the particles produced by the heating method are large and non-uniform, causing them to easily adhere to air conditioning pipes and the like. EX1013, ¶ [0004]. In the case of the air to fluid atomization, the particles have a large range in size, generally between 1-50 microns, and are non-

uniform, again causing them to easily adhere to objects like air conditioning pipes. EX1013, ¶ [0005].

139. Thus, Gao provides an atomizer a cold atomization type device that does not require heating and effectively maintains the natural aroma of essence and essential oil, while also providing atomized particles that are finer and more uniform than prior devices. EX1013, Abstract; [0007].

4. Summary of Zeng

140. Zeng (TW 200528150) was published on September 1, 2005, and, thus, I understand is prior art to the ’094 Patent. EX1010 and EX 1011 (certified translation). Zeng teaches an atomizer having a silencing function, specifically a “noise reduction head 20” to reduce the sound of the atomizer during operation. *See* EX 1011, pg. 6 and FIG 3.

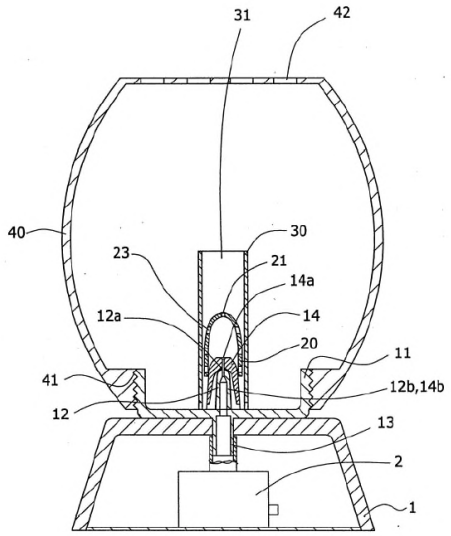

FIG. 3

EX1011, FIG. 3

5. Sebastian Kaiser et al., The Electrospray and Combustion at the Mesoscale, ("Kaiser") (EX1014)

141. Kaiser was published in 2003 (several years before the earliest priority date of the '449). Ex-1014, Cover. Therefore, Kaiser is prior art to the '449 Patent under 35 U.S.C. §102(b). Kaiser describes that the correlation between uniform droplet size and droplet evaporation rate was a well understood phenomenon in the field, at the time of the invention. Ex-1014, pg. 43 ("critical to uniform evaporation and burning is a good control of the size distribution of the resulting aerosol.").

VII. REASONS THE CHALLENGED CLAIMS OF THE '094 PATENT ARE UNPATENTABLE

A. GROUND 1: Claims 7-9 and 11 are rendered obvious under 35 U.S.C. § 103 by Sevy

Claim 7. [PRE] A fluid dispersion assembly is operatively interconnected to a container of an operative fluid and a compressed air source to generate and discharge a fluid dispersion into a surrounding airspace, said fluid dispersion assembly comprising:

142. Patent Owner has contended that the preamble is not limiting. *See* EX1018, Exhibit B. However, to the extent the preamble is limiting, it is my opinion that it is taught by Sevy.

143. Sevy is titled and directed to an "Integrated, Essential-Oil Atomizer" for distributing essential oils into the atmosphere of a room. *See* EX1009, ¶ [0004]; *see also* EX1009, FIG. 1 (reproduced below).

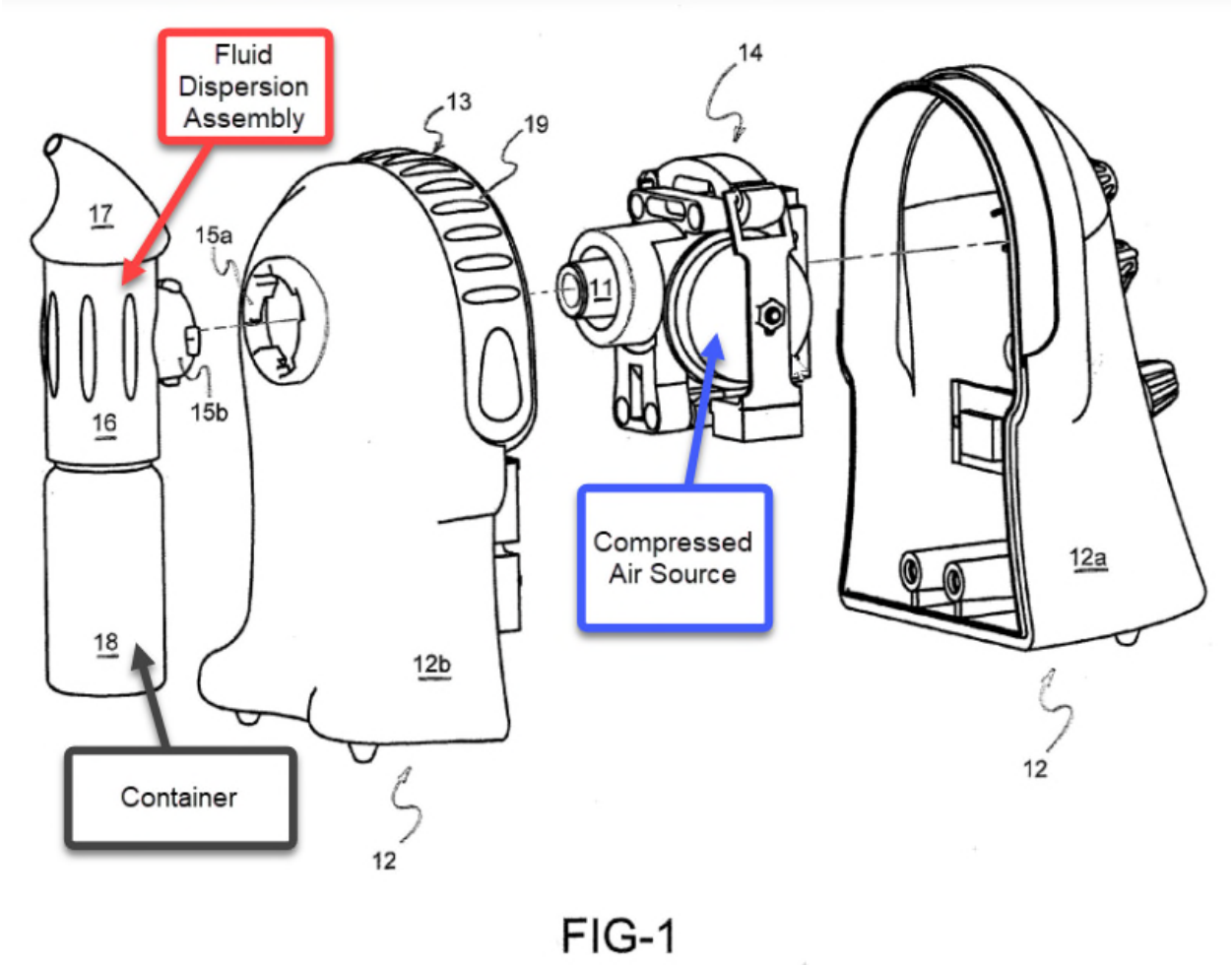

EX1009, FIG. 1

144. Sevy's essential oil apparatus is configured "to discharge atomized liquids out the director 17." EX1009, ¶ [0041]. "In the illustrated embodiment, the atomizer 16 may secure such as by threads or the like to a reservoir 18." EX1009, ¶ [0041]. Further, the apparatus is designed to "draw liquids from a reservoir and distribute them through an eductor into the atmosphere." EX1009, ¶ [0010].

145. Thus, it is my opinion that a POSITA would understand that Sevy's fluid dispersion assembly is operatively interconnected to a container (*e.g.*, reservoir

18) because the atomizer 16 is secured by threads to reservoir 18 and, when in operation, the apparatus draws liquids from reservoir 18 and distributes them through eductor 17.

146. Sevy also recites that "[w]ithin the housing 12, may be located a pump 14." EX1009, ¶ [0041]. "Air from the pump 14 drives atomization in the atomizer 16 to discharge atomized liquids out of director 17" and into the atmosphere. EX1009, ¶ [0041].

147. Thus, it is also my opinion that a POSITA would understand that Sevy's fluid dispersion assembly is operatively interconnected to a compressed air source (*i.e.*, pump 14) because air from the pump 14 drives atomization, and the operative interconnection providing air is meant to generate and discharge a fluid dispersion into a surrounding airspace because the air from the pump drives atomization in the atomizer 16 to discharge atomized liquids.

148. Sevy's pump 14 is a motorized diaphragm type pump that "compress[es] air to a pressure greater than ambient pressure." EX1009, claim 16 and ¶¶ [0020], [0028], [0041], [0056] and [0057]. It is well understood that a diaphragm pump compresses air to a pressure greater than ambient pressure. Thus, it is my opinion that a POSITA would understand motorized pump 14 to be a compressed air source under Patent Owner's proposed construction because pump 14 compresses air to a pressure greater than ambient pressure.

7[A] a diffusion unit at least partially defining a diffusion chamber;

149. It is my opinion that Sevy discloses or renders obvious a fluid dispersion assembly comprising a diffusion unit at least partially defining a diffusion chamber.

150. Sevy teaches that the wall of atomizer 16 at least partially defines a chamber. *See* EX1009, FIGS. 7 and 8 (reproduced below). Furthermore, Sevy teaches that droplets educted from nozzle 92 "dash against the wall 121" of atomizer 16 and cause additional atomization. *See* EX1009, ¶ [0082]. As a result, relatively small droplets become entrained in the air. See EX1009, ¶ [0082].

151. It is thus my opinion that Sevy's atomizer 16 corresponds to the claimed diffusion unit, and that atomizer 16 at least partially defines a diffusion chamber (*e.g.*, the chamber of atomizer 16).

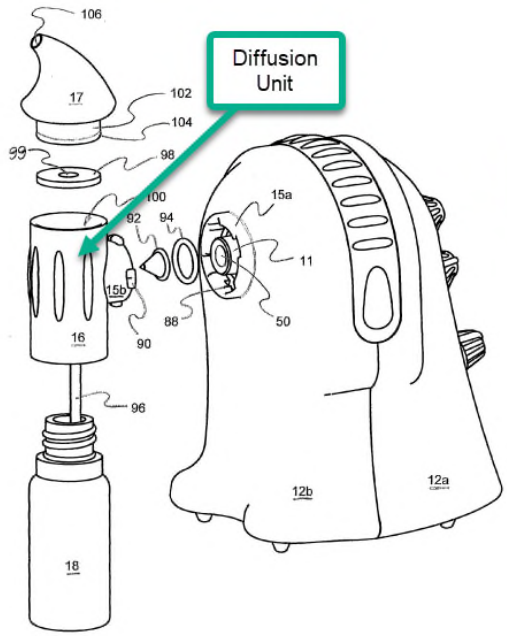

FIG-7

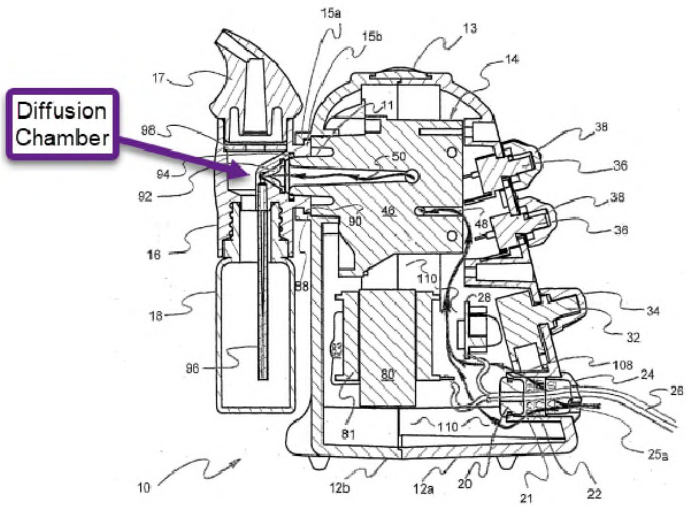

FIG-8

EX1009, FIGS. 7 and 8

7[B] a discharge port disposed in fluid communication between said diffusion chamber and the surrounding airspace,

152. It is my opinion that Sevy discloses or renders obvious a fluid dispersion assembly comprising a discharge port disposed in fluid communication between said diffusion chamber and the surrounding airspace.

153. Sevy discloses a port 106 formed in the director/eductor 17 through which atomized liquid droplets are passed. *See* EX1009, ¶ [0072]. More specifically, "[a]ir from the pump 14 drives atomization in the atomizer 16 to discharge atomized liquids out of director 17." EX1009, ¶ [0041]; *see also* ¶ [0010] (reciting the apparatus is designed to "draw liquids from a reservoir and distribute them through an eductor into the atmosphere"). FIG. 9 of Sevy illustrates the droplet flow. In the

modified and annotated FIG. 9 below, the light pink arrow depicts droplets flowing from the diffusion chamber (*e.g.*, the of atomizer 16) through the discharge port 16 of eductor 17 and into the surrounding airspace.

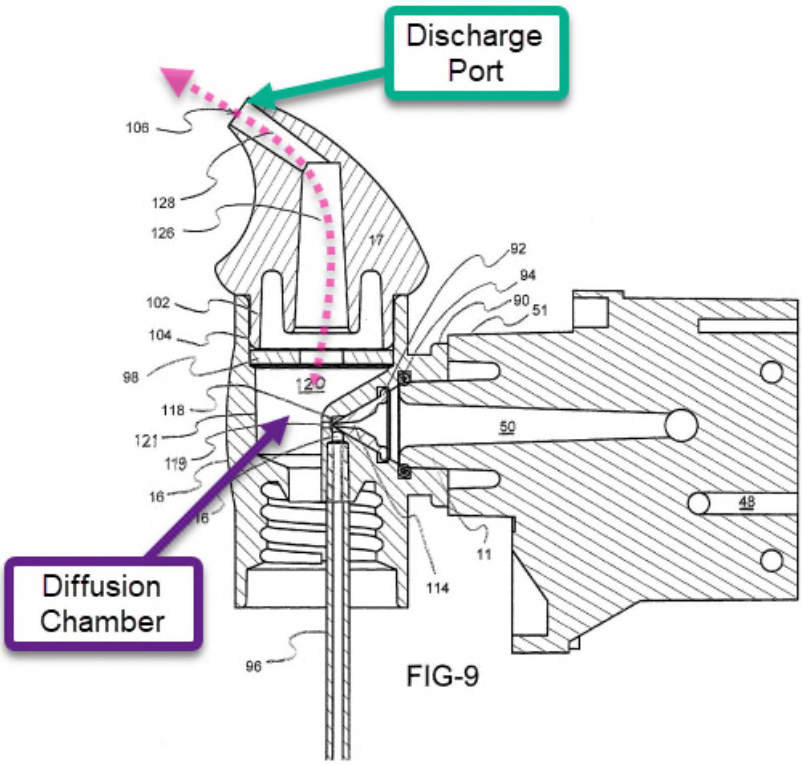

EX1009, FIG. 9

154. It is thus my opinion that a POSITA would understand that, based on FIG. 9 and the above teachings, Sevy's port 106 corresponds to a discharge port, and that such discharge port is disposed in fluid communication between the diffusion chamber (*e.g.*, the chamber of atomizer 16) and the surrounding airspace (*e.g.*, the ambient air).

7[C] a diffusion assembly disposed in an operative engagement with said diffusion unit,

155. It is my opinion that Sevy discloses or renders obvious a diffusion assembly disposed in an operative engagement with said diffusion unit.

156. The ’094 Patent explains that “the diffusion assembly 200 comprises an air inlet 210 and an atomizer assembly 220.” EX1001, 5:5-6. It is my opinion that Sevy teaches a structure that corresponds to the diffusion assembly. Specifically, Sevy discloses an air inlet (*e.g.*, passage 50) that passes air from pump 14 to atomizer 16. *See* EX1009, ¶ [0079]. Sevy explains that “[t]he momentum of the jet of air … creates a localized vacuum at the top of the siphon 96, drawing liquid up the siphon 96 from the reservoir 18, and transferring momentum into that liquid to atomize it and throw it into the atomizer 16.” EX1009, ¶ [0067]; *see also* FIG. 9. Sevy’s diffusion assembly (*e.g.*, the combination of the air inlet (*e.g.*, passage 50) and the atomizer assembly that atomizes the liquid) is shown in yellow in annotated FIG. 9 below

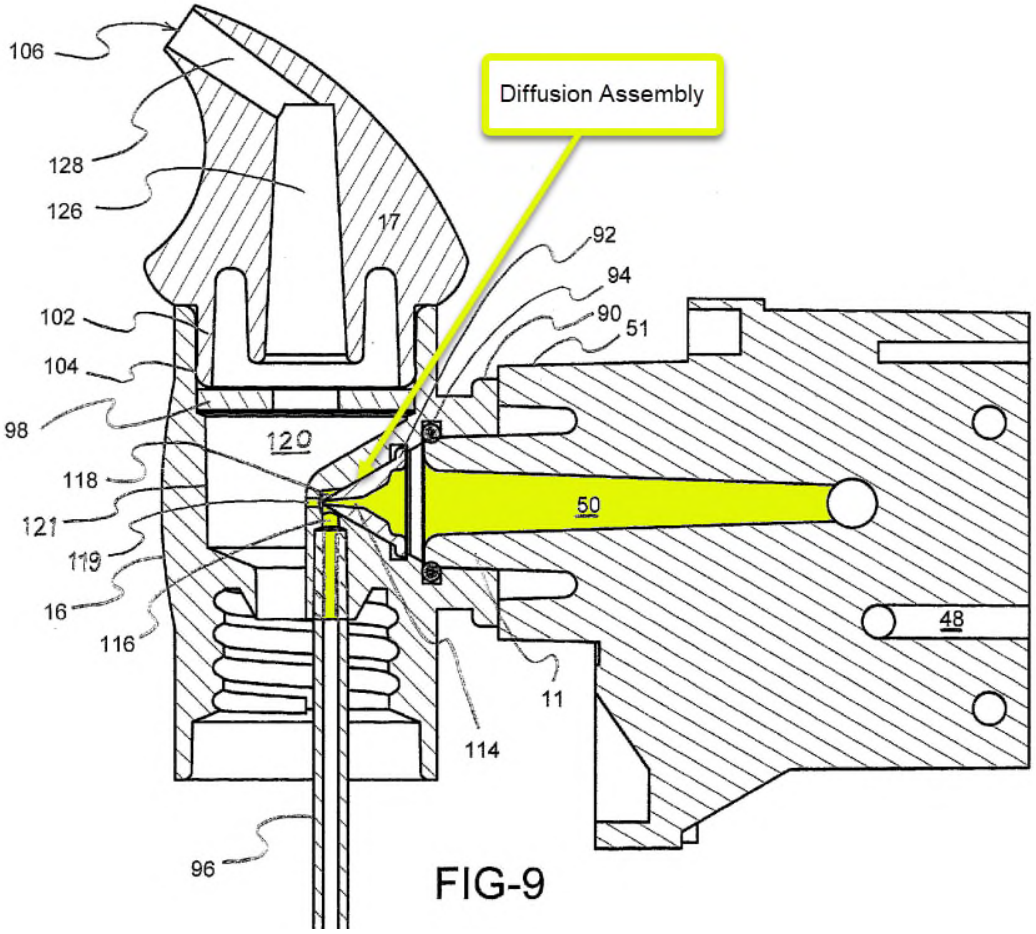

EX1009, FIG. 9

157. Because Sevy's diffusion assembly expels atomized droplets into the chamber of atomizer 16 (*e.g.*, the diffusion unit), it is my opinion that a POSITA would understand Sevy to teach a diffusion assembly disposed in operative engagement with the diffusion unit. EX1009, ¶ [0067].

7[D] wherein said diffusion assembly comprises an atomizer assembly, and

158. It is my opinion that Sevy discloses or renders obvious a diffusion assembly comprising an atomizer assembly.

159. As explained above, Sevy discloses a diffusion assembly (*e.g.*, the combination of passage 50 and an assembly that atomizes a liquid). EX1009, ¶ [0067]. As described below, Sevy's atomizer assembly includes an air inlet channel, a fluid inlet, a mixing chamber, and an atomizer exhaust channel.

160. Further, Sevy discloses a nozzle 92 that is formed separately from the main body of atomizer 16 and is designed to form a seal with the atomizer. EX1009, ¶ [0065]. Sevy's nozzle 92 receives air from passage 50, and atomizes the liquid from the reservoir, as the air passes into the diffusion chamber (*e.g.*, the chamber of atomizer 16). *See* EX1009, ¶¶ [0066] and [0079]. Sevy explains that "[t]he nozzle 92 encloses a cavity 114 or channel 114 leading from the passage 50 toward an orifice 118." EX1009, ¶ [0079]; *see also id.*, FIG. 9 (illustrating that the air from passage 50 is passed to nozzle 92 via channel 114).

161. It is thus my opinion that a POSITA would understand that channel 114 corresponds to the claimed atomizer air inlet channel recited in dependent claim 8, discussed in further detail below.

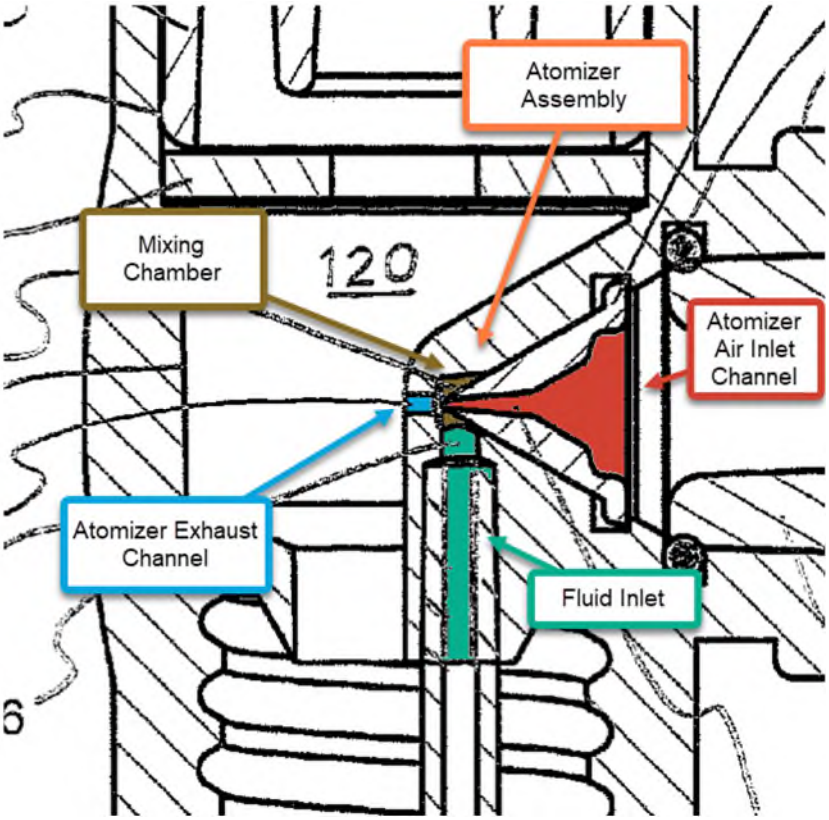

EX1009, FIG. 9 (partial and enlarged)

162. Sevy's "orifice 118 is located within a cavity 116 sealed by the shape of the nozzle 92 itself. The cavity 116 has three openings." EX1009, ¶ [0080]. "From the pump side, the cavity is open to the orifice 118 of the nozzle 92." EX1009, ¶ [0080]. "From below, the cavity 116 is open to the siphon 96 leading to the reservoir 18." EX1009, ¶ [0080]. "Toward the atomizer 16, the cavity is open to yet another orifice 119. The exit orifice 119 permits discharge of fluids including air from the orifice 118 and liquid from the siphon tube 96 out the exit orifice 119." EX1009, ¶ [0080].

163. Sevy teaches that its atomizer assembly operates as follows: "The reduced pressure in the chamber 116 draws liquid through siphon tube 96 from the reservoir 18. Liquid is not only drawn in, but also comminuted by the blast of high speed air, comparatively speaking, from orifice 118." EX1009, ¶ [0081]. Then, "[t]he liquid from the siphon 96 is atomized into droplets of various sizes. The entire mixture of air and droplets passes through the exit orifice 119." EX1009, ¶ [0082].

164. It is thus my opinion that a POSITA would understand that Sevy discloses an atomizer assembly, which includes an atomizer air inlet channel (*e.g.*, channel 114 that receives air from passage 50 and passes it to nozzle 92), a fluid inlet (*e.g.*, siphon 96 that receives liquid from reservoir 18), a mixing chamber (*e.g.*, cavity 116 where the liquid from siphon 96 and the blast of high speed air are initially mixed together to atomize the liquid into droplets), and an atomizer exhaust channel (*e.g.*, exit orifice 119 that discharges the liquid droplets into the diffusion chamber (*e.g.*, the chamber of atomizer 16)). In other words, it is my opinion that Sevy teaches a diffusion assembly that comprises an atomizer assembly, which, again, is the assembly of parts that atomizes the liquid into droplets (*e.g.*, the entire diffusion assembly excluding passage 50).

165. It is also my opinion that a POSITA would understand Sevy to teach a diffusion assembly that comprises an atomizer assembly as described in greater detail below with reference to the limitation of dependent claim 8.

7[E] a silencer assembly having a silencer inlet, a silencer outlet, and a baffle,

166. It is my opinion that Sevy discloses a silencer assembly having a silencer inlet, a silencer outlet, and a baffle.

167. As an initial matter, it is my understanding that Petitioner and Patent Owner have stipulated to construing the term "baffle" as a "structure that disrupts the flow of fluid dispersion through the fluid dispersion assembly." EX1018, Exhibit B. I also understand that Patent Owner has contended that the term "silencer assembly" should be given its plain and ordinary meaning, or alternatively, construed to mean an "assembly that reduces the amount of noise generated during operation of the fluid dispersion assembly as the fluid dispersion flows therethrough." EX1018, Exhibit B.

Sevy's Separator Plate (98) Corresponds to a Baffle

168. Sevy's Figure 9 depicts a separator plate 98 disposed within an opening 100 of the diffusion unit (*e.g.*, atomizer 16) and sits on a tapered ledge therein. *See* EX1009, ¶ [0068]; *see also* FIG. 9 (reproduced below where the separator plate is shaded in gray).

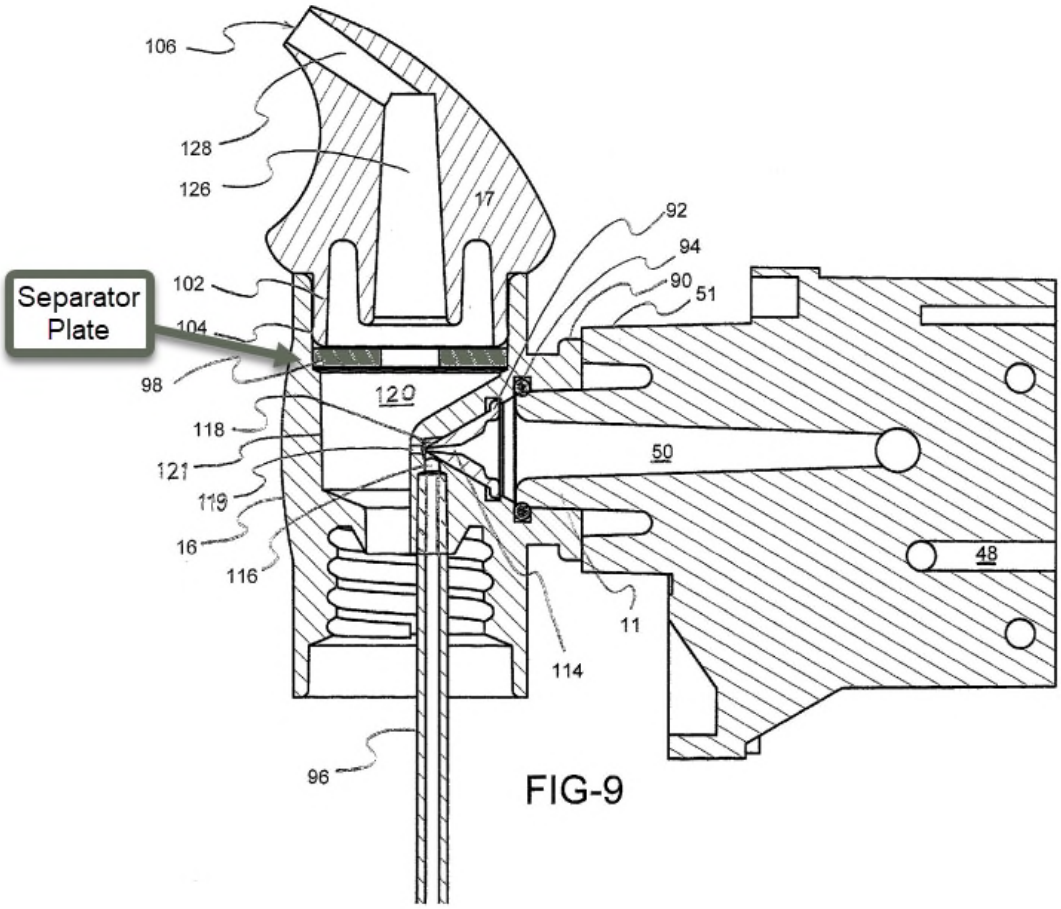

EX1009, FIG. 9

169. Sevy teaches that "[t]he separator plate 98 may include one or more apertures 99 located centrally, peripherally, or otherwise." EX1009, ¶ [0068]. In this regard, "[d]roplets that cannot move with the air flow, typically because they have too large a size and mass … will strike the walls of the opening 100 or the separator plate 98." EX1009, ¶ [0069]. On the other hand, "more finely divided droplets form a cloud moving with the flow of air out of the opening 100 of the atomizer 16 and through the apertures 99 of the separator plate 98." EX1009, ¶ [0070]. As a result,

"[t]he net flow of air passes through the apertures 122 of the separator plate 98, on its way into the passages 126 and 128 of the director 17." EX1009, ¶ [0084].

170. Sevy further recites that "various components are sized to cause air flows that will *twist and turn*." EX1009, ¶ [0074] (emphasis added).

171. It is my opinion that a POSITA would understand that separator plate 98 is an "orifice baffle" or an "orifice baffle plate", which is a type of baffle with openings (*e.g.*, apertures 99) designed to create a pressure drop (or throttling effect), redirect fluid flow, serve as a flow conditioner, suppress incoming turbulence, enhance downstream mixing by creating localized shear layers, and suppress turbulence further downstream as the flow stabilizes and turbulence is rapidly dissipated. *See generally, e.g.*, EX1025.

172. Thus, a POSITA would understand that Sevy's separator plate 98 not only disrupts the overall flow of droplets by blocking (*i.e.*, separating out) droplets over a certain size (*e.g.*, relatively large droplets), but also disrupts the air flow and results in the rapid dispersion of the relatively smaller droplets and suppression of turbulence further downstream of the separator plate.

173. It is thus my opinion that separator plate 98 corresponds to a baffle.

Silencer Assembly

174. A POSITA would understand that a structure like separator plate 98, which disrupts fluid flow (*e.g.*, a baffle) by sudden cross-sectional changes, would

also limit sound associated therewith by creating acoustical impedance discontinuities that reflect sound back to the source and flow resistance that suppresses turbulence so that less flow noise is generated. *See supra*, ¶¶79-89. In fact, the '094 Patent explicitly teaches that an inherent result of a structure such as a baffle (*e.g.*, separator plate 98) that disrupts fluid flow is the dampening of sound waves associated with such fluid flow. *See, e.g.*, EX1001, 6:1-8, 7:1-11, and 7:64-8:2 (teaching that sound dampening is a byproduct of disrupted fluid flow).

175. It is thus my opinion that a POSITA would understand Sevy to teach a silencer assembly including a baffle as depicted below.

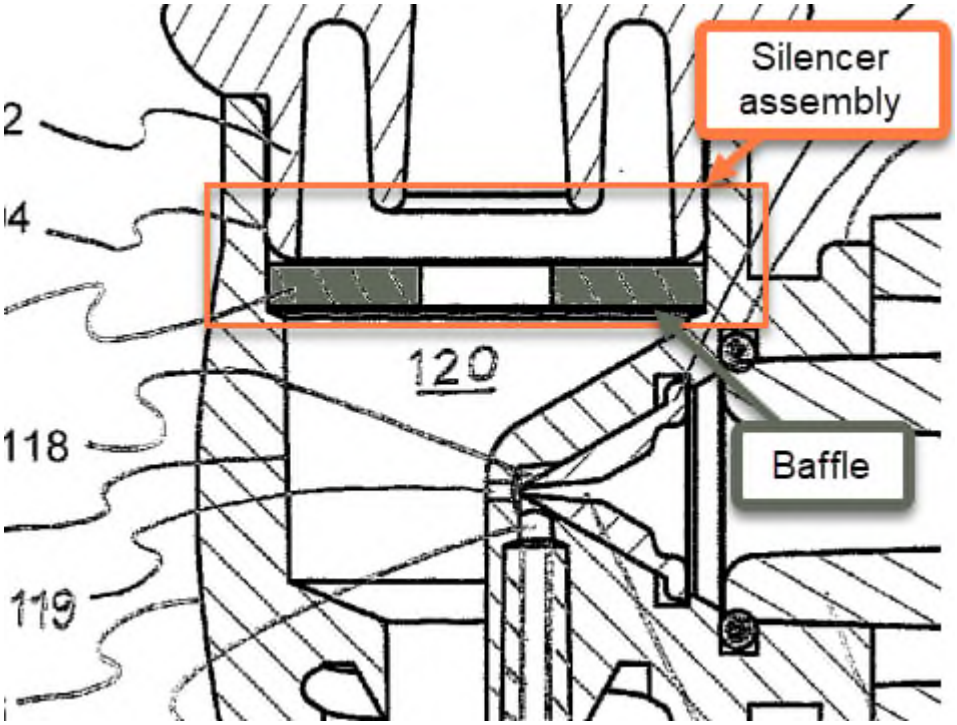

EX1009, FIG. 9

176. Sevy further teaches, as shown below, that the relatively small droplets flow through an inlet formed by the tapered ledge and then through the apertures of the baffle (*e.g.*, separator plate 98) before passing through an outlet in fluid communication with passage 126 provided downstream of the baffle. *See* EX1009, FIG. 9.

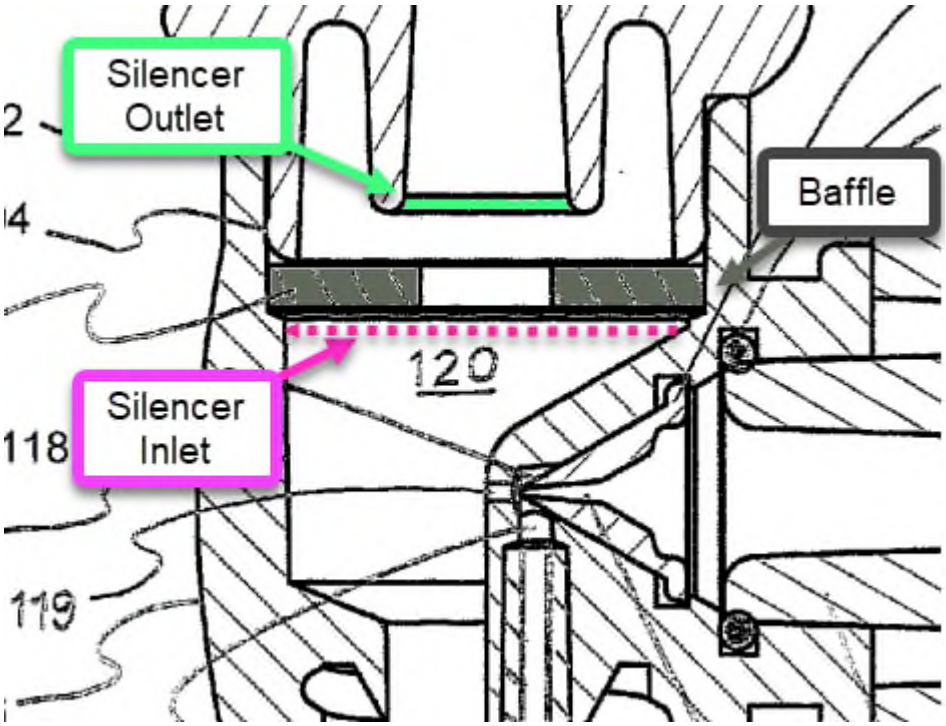

EX1009, FIG. 9

177. Thus, it is my opinion that a POSITA would understand that Sevy discloses a silencer assembly having a silencer inlet, a silencer outlet, and a baffle.

> **7[F] wherein said baffle partially restricts movement of the fluid dispersion through said silencer chamber from said silencer inlet to said silencer outlet, thereby dampening sound waves generated during operation of said fluid dispersion assembly.**

178. It is my opinion that Sevy discloses or renders obvious a baffle that partially restricts movement of the fluid dispersion through said silencer chamber from said silencer inlet to said silencer outlet, thereby dampening sound waves generated during operation of said fluid dispersion assembly.

179. As an initial matter, it is my understanding that Patent Owner contended in the district court litigation that the term "silencer chamber" contains "a clerical error" and should be construed to mean "silencer assembly." *See* EX1018, page 1. I have therefore accepted Patent Owner's proposed construction of "silencer chamber" such that the limitation is removed from the claim.

180. Nevertheless, it is my opinion that Sevy discloses a silencer chamber between the silencer inlet and outlet identified above. I respectfully reserve my right to supplement this Declaration with additional arguments that Sevy teaches a silencer chamber in the event that Patent Owner modifies its construction of this limitation or the PTAB disagrees with same.

Fluid Dispersion

181. It is my understanding that the Parties stipulated that the term "fluid dispersion" should be construed to mean a "mixture of operative fluid in air comprising a plurality of substantially uniform droplets (having substantially the same diameter) of the operative fluid dispersed throughout the air." *See* EX1018, Exhibit A. The '094 Patent explains that "the plurality of 'substantially uniform

droplets' each have a diameter in the range of one micron (1 μm), in another embodiment, the diameter of the droplets is in the range of about three microns (3 μm), and, in one further embodiment, droplet diameter is in the range of about five microns (5 μm)." EX1001, 3:15-21.

182. I note that Sevy does not explicitly use the term "substantially uniform" with respect to the atomized droplet size. Nevertheless, it is my opinion that a POSITA would appreciate that Sevy's assembly produces droplets having a substantially uniform diameter.

183. First, Sevy teaches that its invention is "an advance in the art" because it "provide[s] an atomizer that provides a better atomization or a smaller mean or average size of droplet in the distribution of atomized droplets." EX1009, ¶ [0009]. A POSITA would know the control parameters governing the relative velocity between an atomized droplet and airflow, and that droplet diameters less than 5 μm would follow the air flow in the room, i.e., the relative velocity (drift velocity) between an atomized droplet and the air flow is approximately zero. *See supra*, ¶¶ 102-105.

184. Indeed, Sevy recognizes this principle. *See* EX1009, ¶ [0074] (reciting "[e]vaporation is a function of vapor pressure of a material, local concentration, and surface area available to evaporate molecules therefrom").

185. Sevy's atomized droplets have diameters that "are on the order of 1 to 5 microns." EX1009, ¶ [0074]. The '094 Patent discloses the same exact range of acceptable embodiments. Moreover, Sevy's orifice baffle is designed to provide a better and more uniform mixing as I explained baove. Accordingly, a POSITA would appreciate that the relatively small, atomized droplets disclosed in Sevy meet the "fluid dispersion" limitation.

186. It is my further opinion that if atomized droplets on the order of 1 to 5 microns does not meet "fluid dispersion" limitation, it would have been obvious to modify the location, size, and/or amount of apertures 99 in the separator plate 98 to achieve an even narrower range of droplet sizes, such that a plurality (at least two of the droplets) are substantially uniform to improve evaporation uniformity. EX1009, ¶ [0068] (stating "the separator plate may include one or more apertures 99 located centrally, peripherally, or otherwise"); and EX1009, ¶ [0074] (stating "[e]vaporation is function of … surface area available to evaporate molecules … the smaller the effective diameter of various droplets of liquid, the higher the rate of evaporation").

187. As discussed above with respect to the claim limitation set forth in 7[E], Sevy discloses a baffle (*e.g.*, separator plate 98) that restricts movement of the relatively small and substantially uniform droplets (*e.g.*, the fluid dispersion) entrained in the air through said silencer assembly from said silencer inlet to said silencer outlet. As explained above, it is my opinion that a POSITA would readily

understand that a structure that disrupts fluid flow, such as a baffle, would also dampen or limit sound during operation of the device. *See* EX1001, 6:1-8, 7:1-11, and 7:64-8:2 (explaining that sound dampening is a byproduct of disrupted fluid flow).

188. It is thus my opinion that Sevy renders claim 7 obvious.

Claim 8. The fluid dispersion assembly as recited in claim 7 wherein said atomizer assembly comprising an atomizer air inlet channel, a fluid inlet, a mixing chamber, and an atomizer exhaust channel.

189. It is my opinion that Sevy discloses or renders obvious the fluid dispersion assembly as recited in claim 7 wherein the atomizer assembly comprises an atomizer air inlet channel, a fluid inlet, a mixing chamber, and an atomizer exhaust channel.

190. Sevy's atomizer assembly includes an air inlet channel, a fluid inlet, a mixing chamber, and an atomizer exhaust channel as described with respect to claim limitation 7[D] above.

Claim 9[A] The fluid dispersion assembly as recited in claim 8 wherein said atomizer air inlet channel is interconnected to the compressed air source and said fluid inlet disposed in fluid communication with the operative fluid in the container,

191. Sevy discloses or renders obvious the fluid dispersion assembly as recited in claim 8 wherein said atomizer air inlet channel is interconnected to the

compressed air source and said fluid inlet disposed in fluid communication with the operative fluid in the container.

192. As described above, the air inlet channel (*e.g.*, channel 114) is interconnected to the compressed air source (*e.g.*, pump 14) via the air inlet (*e.g.*, passage 50). EX1009, ¶ [0077]; EX1009, ¶ [0079]; and EX1009, FIG. 8.

193. It is thus my opinion that Sevy discloses an atomizer air inlet channel that is interconnected to the compressed air source.

Claim 9[B] wherein the compressed air and the operative fluid are mixed together in said mixing chamber to form the fluid dispersion.

194. Sevy discloses or renders obvious the compressed air and the operative fluid are mixed together in said mixing chamber to form the fluid dispersion.

195. As mentioned above, Sevy teaches "[t]he reduced pressure in the chamber 116 draws liquid through siphon tube 96 from the reservoir 18. Liquid is not only drawn in, but also comminuted by the blast of high speed air, comparatively speaking, from orifice 118." EX1009, ¶ [0081]. Then, "[t]he liquid from the siphon 96 is atomized into droplets of various sizes. The entire mixture of air and droplets passes through the exit orifice 119." EX1009, ¶ [0082]; *see also* EX1009, FIG. 9.

196. It is my understanding that Patent Owner appears to construe the term "fluid dispersion" differently when the term is used in connection with the "diffusion chamber" than when the term is used in connection with the "mixing chamber."

EX1018, Exhibit B. More specifically, it is my understanding that Patent Owner proposes construing the term "diffusion chamber" as "a region that is structured to facilitate the formation of the fluid dispersion [(*e.g.*, uniform droplet size)] prior to discharge. EX1018, Exhibit B. By contrast, it is my understanding that Patent Owner proposes construing the term "mixing chamber" as "a region where the operative fluid is combined with compressed air." EX1018, Exhibit B. Thus, Patent Owner's proposed construction with respect to the "mixing chamber" appears to broaden the "fluid dispersion" term such that the "fluid dispersion" created in the mixing chamber need only be liquid atomized into droplets, regardless of their size or uniformity. In other words, the compressed air and the operative fluid in the mixing chamber need only mix or combine together to form droplets of no particular size or degree of uniformity.

197. Because Sevy discloses that the compressed air and operative fluid combine or mix together in Sevy's mixing chamber, it is my opinion that Sevy teaches claim element 9[B].

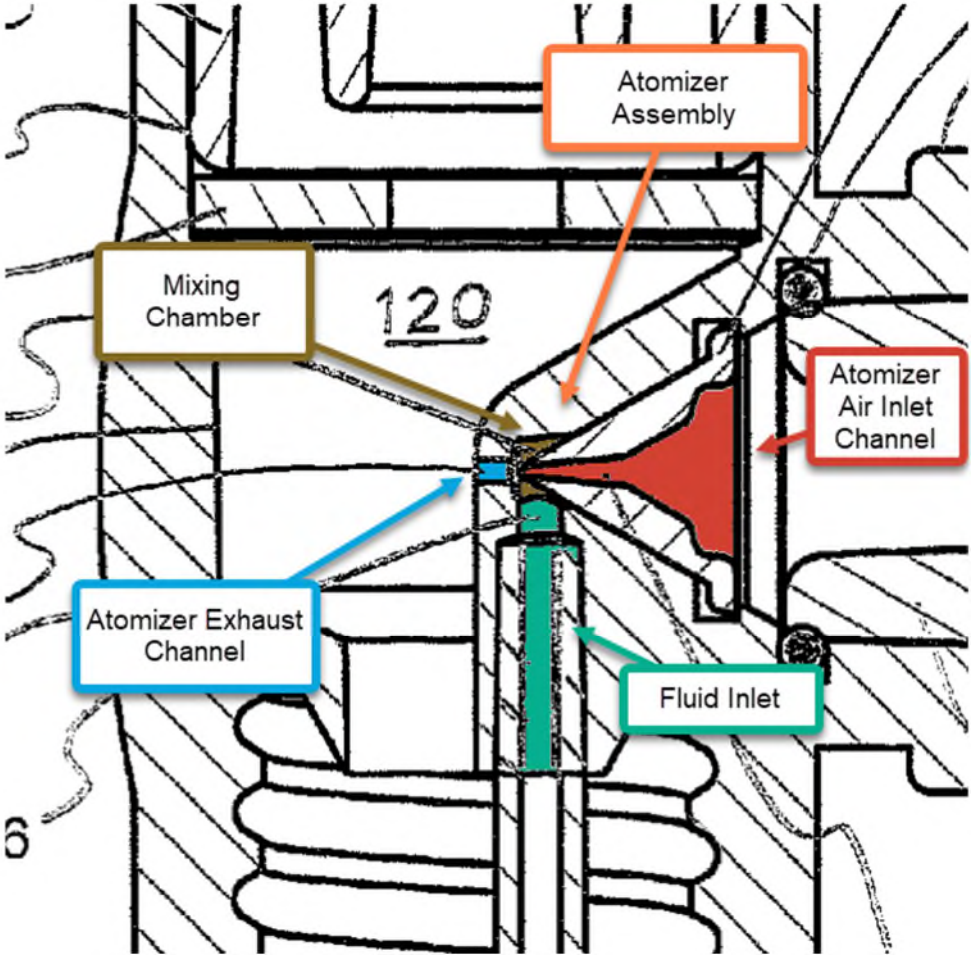

EX1009, FIG. 9 (zoomed in to show features of the atomizer assembly)

> **Claim 11. The fluid dispersion assembly as recited in claim 7 wherein said diffusion chamber facilitates formation of the fluid dispersion prior to discharge of the fluid dispersion from said diffusion chamber through said discharge port and into the surrounding airspace.**

198. It is my opinion that Sevy discloses or renders obvious the fluid dispersion assembly as recited in claim 7 wherein said diffusion chamber facilitates formation of the fluid dispersion prior to discharge of the fluid dispersion from said diffusion chamber through said discharge port and into the surrounding airspace.

199. As described above, the liquid droplets are atomized into droplets of various sizes by the high-speed air as they pass through exit orifice (*e.g.*, the atomizer exhaust channel). *See* EX1009, ¶ [0082]. Large droplets break into smaller droplets "as they dash against the wall 121" of atomizer 16. *See id.* Large droplets agglomerate against the wall 121 and drip down toward the reservoir 18. *See id.* "Other droplets, having comparatively smaller effective diameters, are more easily entrained in the air, and pass with it through the separator chamber and out apertures 122 in the separator plate 98." EX1009, ¶ [0082].

200. Sevy further teaches that, "[u]ltimately, the jet of air expelled from the port 106 carries with it only those droplets that are sufficiently small, typically on the order of from about 1 to about 5 microns in diameter such that they will drift substantially indefinitely with ambient air movement as they evaporate." EX1009, ¶ [0084]. As explained above with respect to claim limitation 7[F], it is my opinion that these droplets satisfy the "fluid dispersion" limitation because they are of droplets with a substantially uniform diameter.

201. For the foregoing reasons, it is my opinion that Sevy discloses or renders obvious claims 7-9 and 11.

B. GROUND 2: Claims 7-9 and 11 are rendered obvious under 35 U.S.C. § 103 by Sevy in view of Zeng

202. As I explained above for Ground 1, it is my opinion that Sevy alone renders obvious claims 7-9 and 11. As part of my analysis, I noted that Sevy

discloses an assembly including a baffle (*e.g.*, separator plate 98) that disrupts and restricts the flow of atomized droplets. As I explained, a POSITA would readily understand that such a baffle dampens sound waves and meets the "silencer assembly" limitations. As I further explained, Sevy at least suggests that its separator plate has a dampening effect on sound waves and meet the limitation of a "silencer assembly." Nevertheless, because Sevy does not explicitly recite that separator plate 98 has a sound dampening effect, I address, in Ground 2 for limitations 7[E] and 7[F], why claims 7-9 and 11 would have been obvious over Sevy in view of Zeng, which explicitly discloses a noise reduction head 20 for this purpose.

203. Notably, Ground 2 still relies on the teachings of Sevy for the other limitations of claims 7-9 and 11 as I discussed above in Ground 1.

> **Claim 7[E] a silencer assembly having a silencer inlet, a silencer outlet, and a baffle,**
>
> **7[F] wherein said baffle partially restricts movement of the fluid dispersion through said silencer chamber from said silencer inlet to said silencer outlet, thereby dampening sound waves generated during operation of said fluid dispersion assembly.**

204. It is my opinion that Sevy in view of Zeng discloses or renders obvious claim limitations 7[E] and 7[F].

205. Zeng is titled and is directed to an "atomizer with a noise reduction function." EX1011, pg. 4. Zeng teaches that the atomizer is designed to be "equipped with a silencer, which not only reduces the spray sound of the atomizer when

atomizing essential oil, but also reduces … the volume of the essential oil molecules, so that the atomization effect can become better." EX1011, pg. 4; *see also* EX1011, FIG. 3.

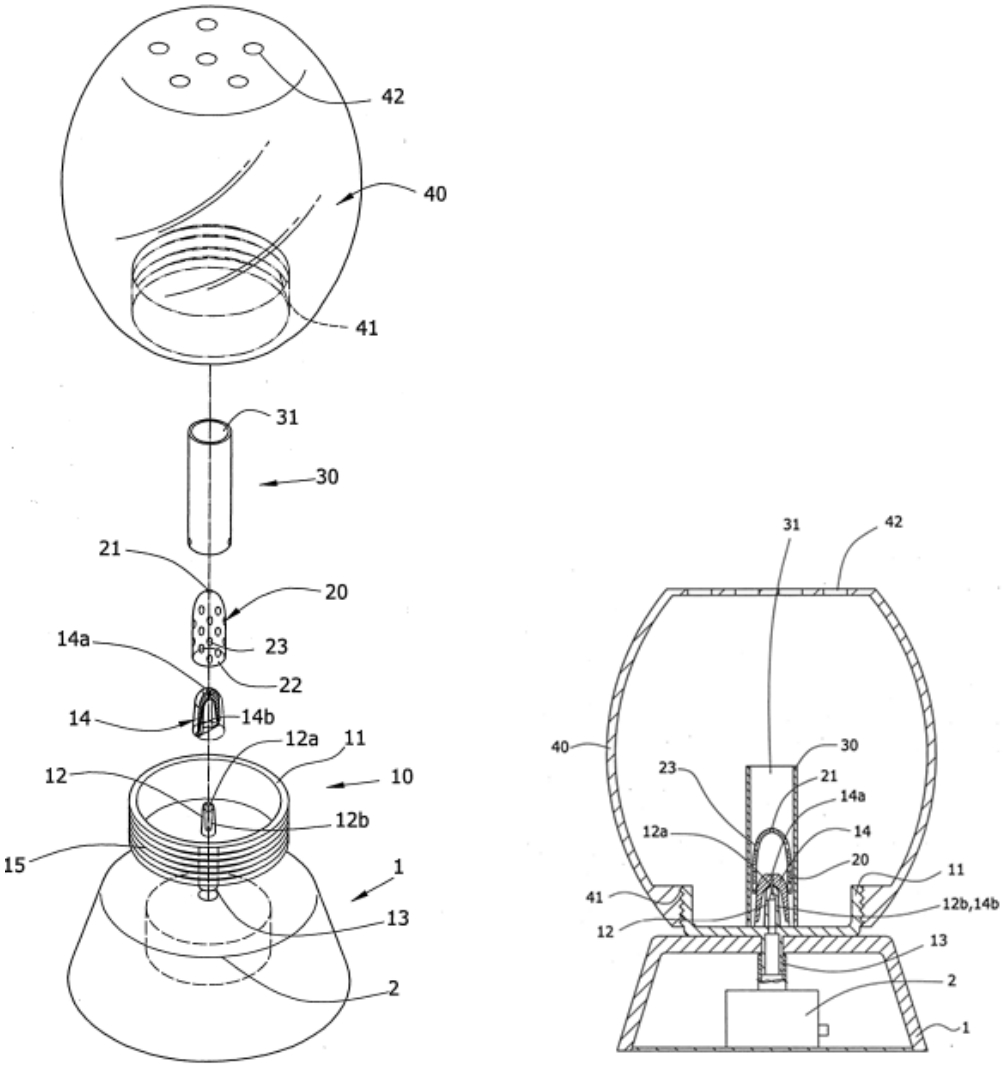

EX1011, FIGS. 2 and 3

206. It is thus my opinion that Sevy and Zeng are analogous references because both teach essential oil atomizers powered by compressed air that improve

atomization by reducing the size/volume of the atomized droplets. *See* EX1009, ¶ [0009]; EX1011, pg. 4.

207. Zeng teaches that its atomizer includes a main body 1 of an aroma diffuser that houses an air blowing motor 2 (*e.g.*, a compressed air source), a blowing pipe 12 in communication with the air blowing motor, an outer cover 40 defining a receptacle base part 11 arranged to receive essential oil 3, an inner cover 30, and a noise reduction head 20 disposed within the inner cover. *See* EX1011, pgs. 6-7, FIG. 3. According to Zeng, when air is blown through air blowing pipe 12, a siphon phenomenon occurs, and the essential oil 3 slowly enters grooves 12b, 14b and is sucked upward toward an orifice of blow pipe 12. *See* EX1011, pgs. 4-7, FIG. 3. The essential oil 3 is then atomized to form tiny essential oil molecules, of varying size, that pass-through air holes 23 formed in the noise reduction head 20. *See* EX1011, at pg. 7, FIG. 3.

208. Zeng teaches that essential oil droplets that are too large (*e.g.*, droplets with incomplete atomization) are blocked by inner cover 30 and flow back to seat 11. *See* EX1011, at pg. 7, FIG. 3. Put differently, the noise reduction head 20 and inner cover 30 serve as inertial impaction droplet separators and only small oil droplets that follow the air flow pass through opening 31 of inner cover 30. Then, as the fluid mixture expands into the volume contained by outer cover 40, the air flow is slowed and larger droplets are removed by gravitational settling such that droplets

of the same and sufficient size pass through vent holes 42 of outer cover 40 before entering the surrounding airspace.

209. It is thus my opinion that a POSITA would understand that the combination of Zeng's noise reduction head 20 and inner cover 30 corresponds to a silencer assembly having a dome shaped "orifice baffle" designed to reflect sound waves serving as a perforated muffler and expansion muffler and only permit small and uniform droplets (*e.g.*, fluid dispersion) to pass through the opening 31 of inner cover 30 (*e.g.*, the silencer assembly).

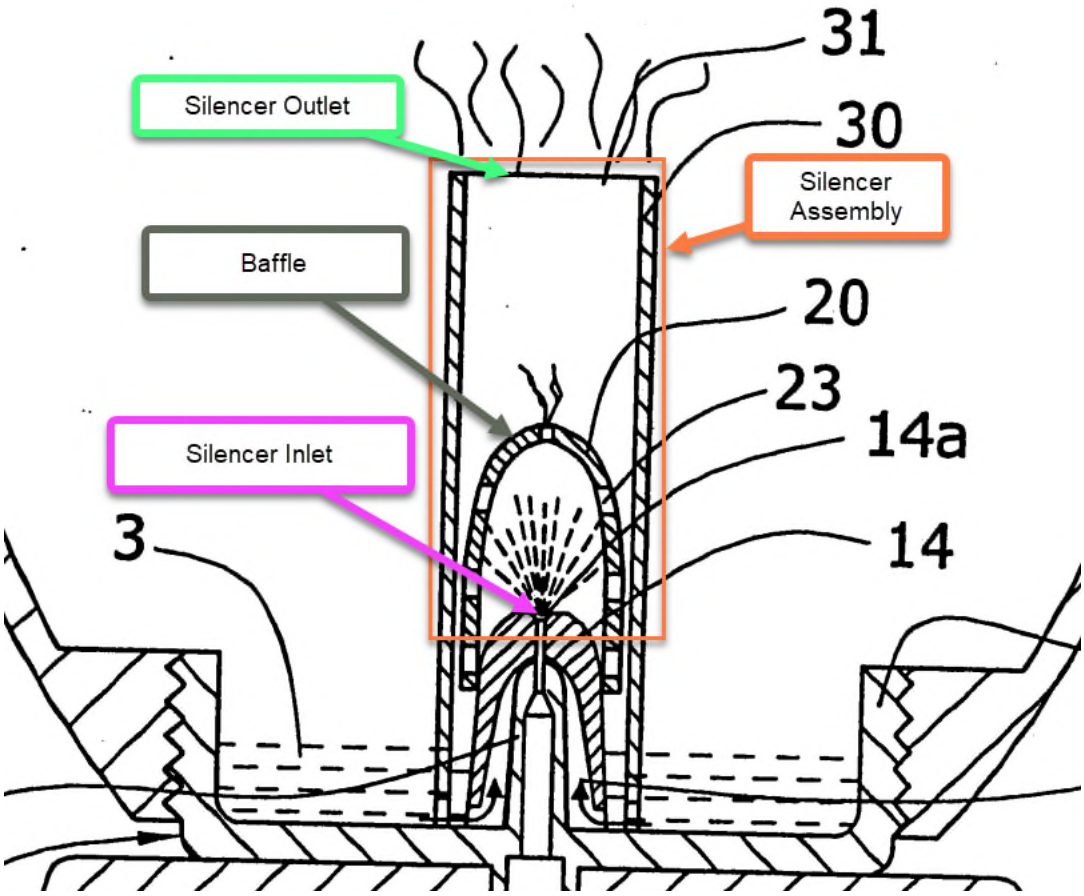

EX1011, FIG. 3 (enlarged to show features of the silencer assembly)

210. A POSITA would have been motivated to combine Zeng with Sevy to improve atomization (*e.g.*, form uniform aerosolized particles) and dampen sound waves. Each of these motivations would have enhanced user experience and a POSITA would have had a reasonable expectation of success in making the proposed modification.

211. More specifically, Zeng identified drawbacks with conventional, essential oil atomizers, namely, such atomizers produced a "hissing" sound and did not optimally atomize essential oil droplets. *See* EX1011, pgs. 4-5. To further enhance user satisfaction, a POSITA would have been motivated to incorporate a silencer assembly as taught by Zeng into Sevy's atomizer 16 to more uniformly atomize the droplets and to dampen this hissing noise.

212. It is my opinion that a POSITA could have implemented the combination of Sevy and Zeng without undue experimentation and would have had a reasonable expectation of success. First, a POSITA would appreciate that Sevy's separator plate 98 and Zeng's silencer assembly (*e.g.*, the noise reduction head 20 and the inner cover 30) are both orifice baffles that serve the same purpose, namely, preventing large molecules of differing sizes from passing therethrough. *See* EX1009, ¶ [0084] (permitting only relatively small droplets ranging from 1 μm to 5 μm to pass therethrough.); EX1011, pg. 7 ("only the completely atomized essential oil molecules can pass through the opening 31 of the inner cover 30"). Second,

Zeng's silencer assembly (*e.g.*, the noise reduction head 20 and the inner cover 30) not only serves the same purpose as the orifice baffle plate of Sevy insofar as it prevents droplet diameters above a certain size from passing therethrough, but it ***additionally*** provides a sound dampening effect. It is my opinion that a POSITA would understand the teaching of "completely atomized" molecules to mean those of substantially the same size and contrasted with droplets of different sizes (*i.e.*, not completely atomized). Thus, to provide droplet uniformity and reduce noise, a POSITA would have been motivated to combine a silencer assembly like that of Zeng with Sevy's atomizer 16.

213. A POSITA would have been motivated to substitute Sevy's separator plate 98 and passage 126 with Zeng's noise reduction head 20 and inner cover 30. Substituting these simple structural components would improve atomization and reduce the amount of noise generated during operation of Sevy's fluid dispersion assembly as the fluid dispersion flows therethrough. The combination of Zeng's silencer 20 and inner cover 30 would replace Sevy's separator plate 98 and passage 126 as roughly illustrated below.

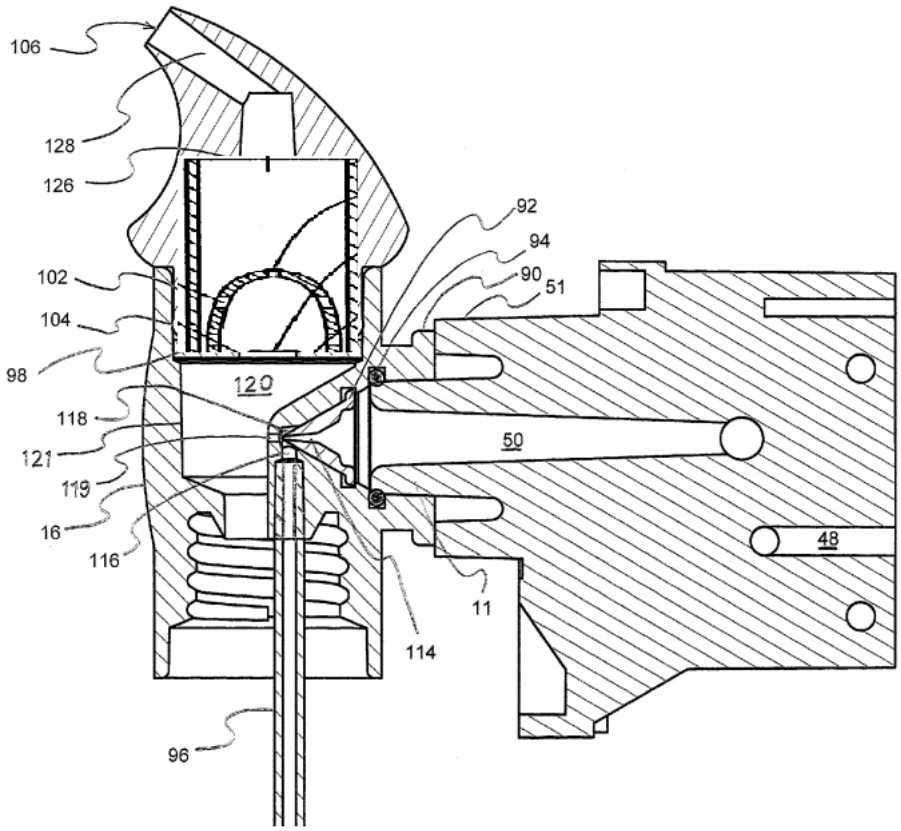

214. The physical space occupied by Zeng's silencer assembly (*e.g.*, silencer 20 and inner cover 30) would be substantially the same as the physical space previously occupied by Sevy's separator plate 98 and passage 126. In addition, Zeng's silencer assembly would only allow relatively small droplets to pass therethrough, much like Sevy's separator plate. Thus, it is my opinion that the structure corresponding to Zeng's silencer assembly could have simply been substituted in to replace the structure corresponding to Sevy's silencer assembly. In my opinion a POSITA would have readily understood that such a modification would achieve the same desired technical effect also provide noise reduction.

Other Limitations of Claim 7

215. It is my opinion that limitations 7[PRE]–7[D] are taught by Sevy for the reasons I previously discussed in Ground 1, as such limitations are unrelated to the silencer assembly limitations 7[E] and 7[F].

Claims 8, 9, and 11

216. Claims 8, 9, and 11 are taught by Sevy for the reasons previously provided in Ground 1 as such limitations are also unrelated to the silencer assembly.

C. GROUND 3: Claims 7-9 and 11 are rendered obvious under 35 U.S.C. § 103 by Goubet

Claim 7. [PRE] A fluid dispersion assembly is operatively interconnected to a container of an operative fluid and a compressed air source to generate and discharge a fluid dispersion into a surrounding airspace, said fluid dispersion assembly comprising:

217. As noted above, Patent Owner's position in the parallel District Court proceeding is that the preamble is not a limitation. While I disagree with that position, accepting it for purposes of this Petition renders this term met.

218. In the event the Board finds the preamble is limiting, it is my opinion that Goubet teaches a fluid dispersion assembly that is operatively interconnected to a container of an operative fluid and a compressed air source to generate and discharge a fluid dispersion into a surrounding airspace. *See, e.g.*, EX1016, Figure 1.

219. Goubet is titled and directed to an "essential oil diffuser" for breaking oil droplets into microdroplets and diffusing them into the ambient air in the form of an oil vapor. *See* EX1016, INID Code Nos. (54) and (57).

220. In view of the title, figures, claims, and specification, it is my opinion that a POSITA would understand that Goubet's essential oil diffuser for breaking oil droplets into microdroplets and diffusing them into the ambient air in the form of an oil vapor is a fluid dispersion assembly, as illustrated by annotated Figure 1.

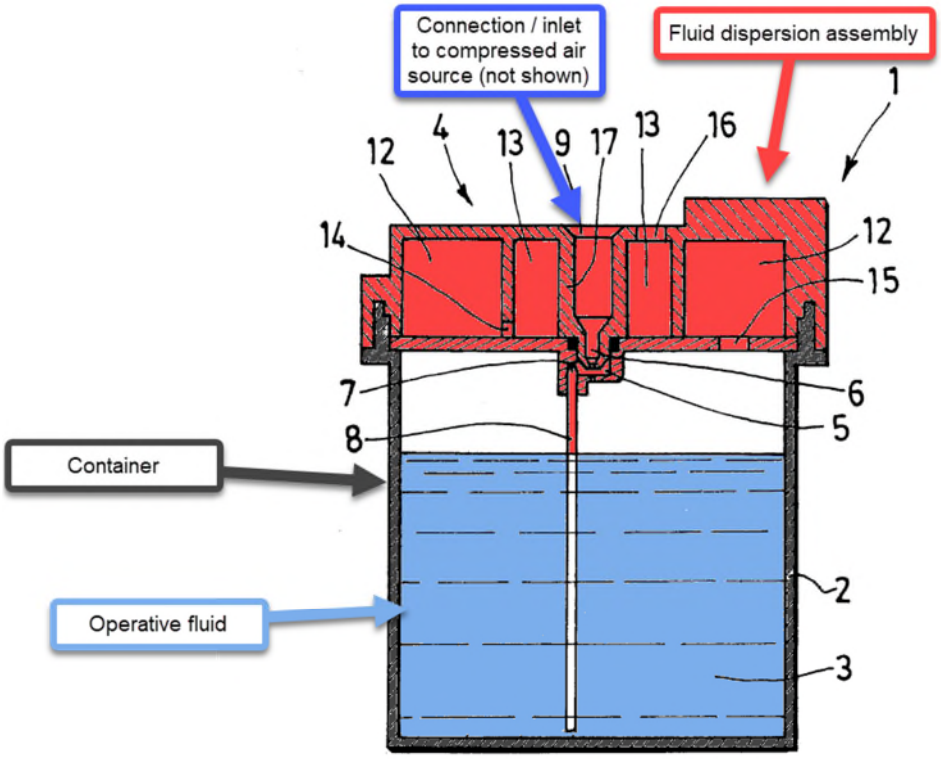

FIG.1

221. Specifically, Goubet teaches a "diffuser 1 compris[ing] an oil 3 reservoir 2 and a diffuser head 4, permanently attached to the reservoir 2 in the example shown [in Fig. 1]." EX1016, 3:24-26.

222. "As shown in Fig. 1 and 2, the diffuser head 4 comprises a diffusion chamber 5 within which oil droplets are produced. The diffusion chamber 5 comprises … an oil inlet in the form of the upper end 10 of a dip tube 8 connected to the essential oil 3 contained in the reservoir 2." EX1016, 3:30-4:2. "The diffuser head 4 also comprises, as shown in Fig. 1, two concentric circular enclosures, an outer enclosure 12 and an inner enclosure 13." EX1016, 4:3-4. "As shown in Fig. 1, the outer chamber 12 communicates with the inside of the reservoir 2 via a droplet flow inlet 15." EX1016, 4:7-8.

223. "The diffuser head may be attached to the reservoir by ultrasonic welding or by any other means, such as gluing or screwing." *Id.*, 3:24-25. Accordingly, Goubet teaches a fluid dispersion assembly (*e.g.*, diffuser head 4) that is operatively interconnected to a container (*e.g.*, reservoir 2) of operative fluid (*e.g.*, oil 3).

224. It is my opinion that a POSITA would understand Goubet's teaching of attaching the diffuser head to the reservoir by ultrasonic welding or by other means, as well as the teaching of an oil inlet formed by the upper end of the dip tube connected to the essential oil in the reservoir is a disclosure that Goubet's fluid

dispersion assembly (*e.g.*, diffuser head 4) is operatively interconnected to a container of an operative fluid (*e.g.*, reservoir 2 containing essential oil 3).

225. Further, Goubet teaches "[c]ompressed air is supplied by a compressor, not shown, [that] penetrates the diffuser head 4 via an air inlet channel 9, connected to said diffusion chamber 5, said inlet channel 9 being arranged inside said inner enclosure 13, concentrically to this inner enclosure. The path of the compressed air is shown in FIG. 2 by the arrows F. When the compressed air flows into the diffusion chamber 5, the essential oil 3 is drawn into the diffusion chamber 5 by the vacuum created and flows into this diffusion chamber 5 through the upper end 10 of the dip tube 8. Air and essential oil are mixed within the diffusion chamber 5 and a flow of oil droplets is created." EX1016, 4:15-22.

226. It is thus my opinion that a POSITA would also understand Goubet to disclose a fluid dispersion assembly (*e.g.*, diffuser head 4) that is operatively interconnected to a compressed air source (*e.g.*, not shown but described in Goubet as a compressor, compressed air supply, pneumatic compressed air distribution system, and/or compressed air distribution network).

227. Goubet further teaches that "[k]nown essential oil diffusers take the form of oil reservoirs fitted with a diffuser head to which a compressed air supply is connected to trigger the diffusion." EX1016, 1:8-9; *see also id.*, 1:19-21 (the fluid dispersion assembly is "triggered by a compressed air supply … enabling the oil to

be diffused in the form of an oil vapour … in the form of particularly fine microdroplets”).

228. In operation, “[w]hen the compressed air flows into the diffusion chamber 5, the essential oil 3 is drawn into the diffusion chamber 5 by the vacuum created … [a]ir and essential oil are mixed within the diffusion chamber 5 and a flow of oil droplets is created.” EX1016, 4:19-22. The microdroplets are eventually discharged from diffuser head 4 into ambient air through outlet 16. EX1016, 4:10-11.

229. It is thus my opinion that a POSITA would understand Goubet to teach that the interconnections of the container and compressed air source cause the diffuser to generate and discharge a fluid dispersion.

230. It is also my opinion that a POSITA would understand Goubet to teach fluid dispersion as defined in the ’094 Patent such that it comprises substantially uniform droplets.

231. In this regard, Goubet teaches a fluid dispersion assembly that is “triggered by a compressed air supply … enabling the oil to be diffused in the form of an oil vapour … in the form of particularly fine microdroplets.” EX1016, 1:19-21. Goubet’s vaporization (i.e., fluid dispersion) means are “arranged to break the oil droplets into microdroplets and to diffuse said microdroplets into the ambient air in the form of an oil vapor,” and the specific arrangement of the diffuser “enables

the size of the oil microdroplets diffused into the ambient air to be reduced to a minimum. As a result, the oil mist diffused at the outlet of the diffuser is not harsh. Furthermore, due to the fineness of the microdroplets, this mist is non-flammable. The diffusion is controlled, gentle, and particularly quiet." EX1016, 2:1-8.

232. It is thus my opinion that a POSITA would understand Goubet to teach that the generated and discharged fluid dispersion is comprised of droplets that are substantially uniform in size due to the specific arrangement of the structural components to minimize the size of the oil microdroplets. It is also my opinion that a POSITA would understand Goubet to teach discharging the fluid dispersion into the surrounding airspace (*e.g.*, "microdroplets diffused into the ambient air").

233. As discussed above, if the preamble is a limitation, then a compressed air source is required. It is my opinion that Goubet's compressor, compressed air supply, pneumatic compressed air distribution system, and/or compressed air distribution network is a compressed air source under any interpretation of the claim, including that set forth by Patent Owner.

234. Thus, Goubet teaches a fluid dispersion assembly (*e.g.*, diffuser head 4) that is operatively interconnected to a container (*e.g.*, reservoir 2) of an operative fluid (*e.g.*, oil 3) and a compressed air source (not shown in figures but described throughout specification) to generate and discharge a fluid dispersion into a surrounding airspace.

7[A] a diffusion unit at least partially defining a diffusion chamber;

235. It is my opinion that Goubet discloses or renders obvious a diffusion unit at least partially defining a diffusion chamber.

236. Goubet teaches a diffuser head 4 that comprises "vaporization means, arranged to break the oil droplets into microdroplets and to diffuse said microdroplets into the ambient air in the form of an oil vapor." EX1016, 2:1-3. In one preferred embodiment, Goubet's "vaporization means comprise at least two concentric circular enclosures, an outer enclosure (12) and an inner enclosure (13), communicating with each other via a passage (14), said two enclosures and said passage forming at least one baffle." EX1016, claim 2.

237. "Within this outer enclosure 12, [the droplets] collide with the walls separating the outer enclosure 12 from the inner enclosure 13 and . . . the droplets are broken up into microdroplets." EX1016, 4:28-5:4. Thereafter, "[t]he microdroplets are diffused into the ambient air in the form of essential oil vapour." EX1016, 5:6-7.

238. It is thus my opinion that a POSITA would understand that the walls of diffuser head 4 (*e.g.*, including the walls separating the outer enclosure 12 from the inner enclosure 13) meet the limitation of a diffusion unit. As described with respect to the fluid flow path and depicted below, the diffusion unit at least partially defines

a diffusion chamber (*e.g.*, shaded purple in FIG. 3) within which the droplets are broken down into smaller droplets.

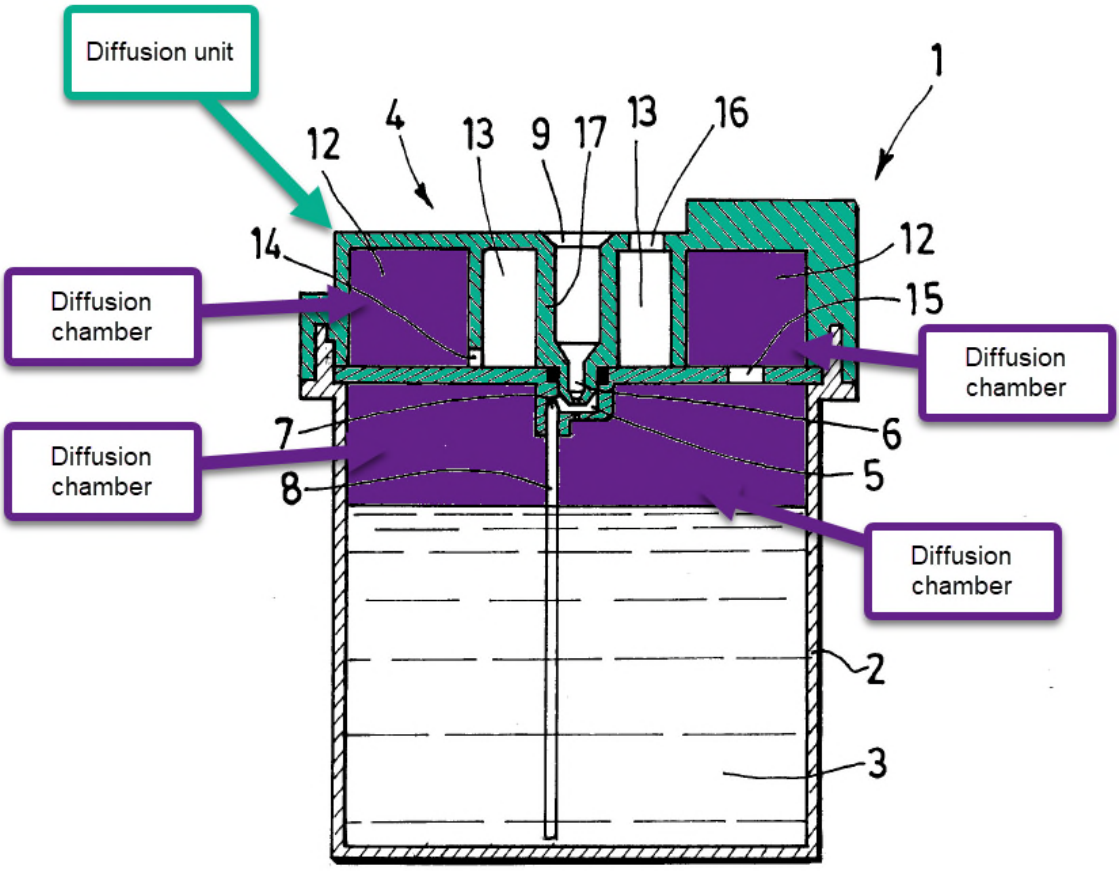

FIG.1

EX1016, FIG. 1

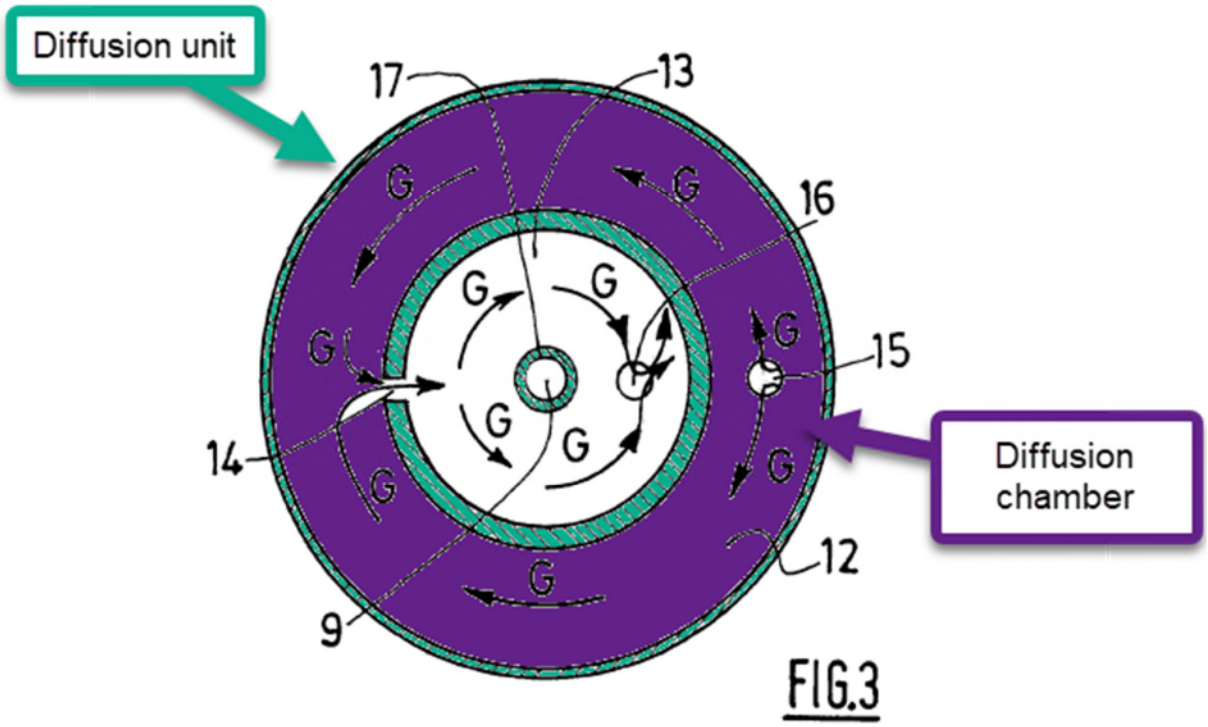

EX1016, FIG. 3

7[B] a discharge port disposed in fluid communication between said diffusion chamber and the surrounding airspace;

239. It is my opinion that Goubet discloses or renders obvious a fluid dispersion assembly comprising a discharge port disposed in fluid communication between said diffusion chamber and the surrounding airspace.

240. Goubet teaches "[t]he inner chamber 13 comprises an outlet 16 for the microdroplets to [enter] the ambient air." EX1016, 4:10-11. Outlet 16 is illustrated in FIG. 1 below.

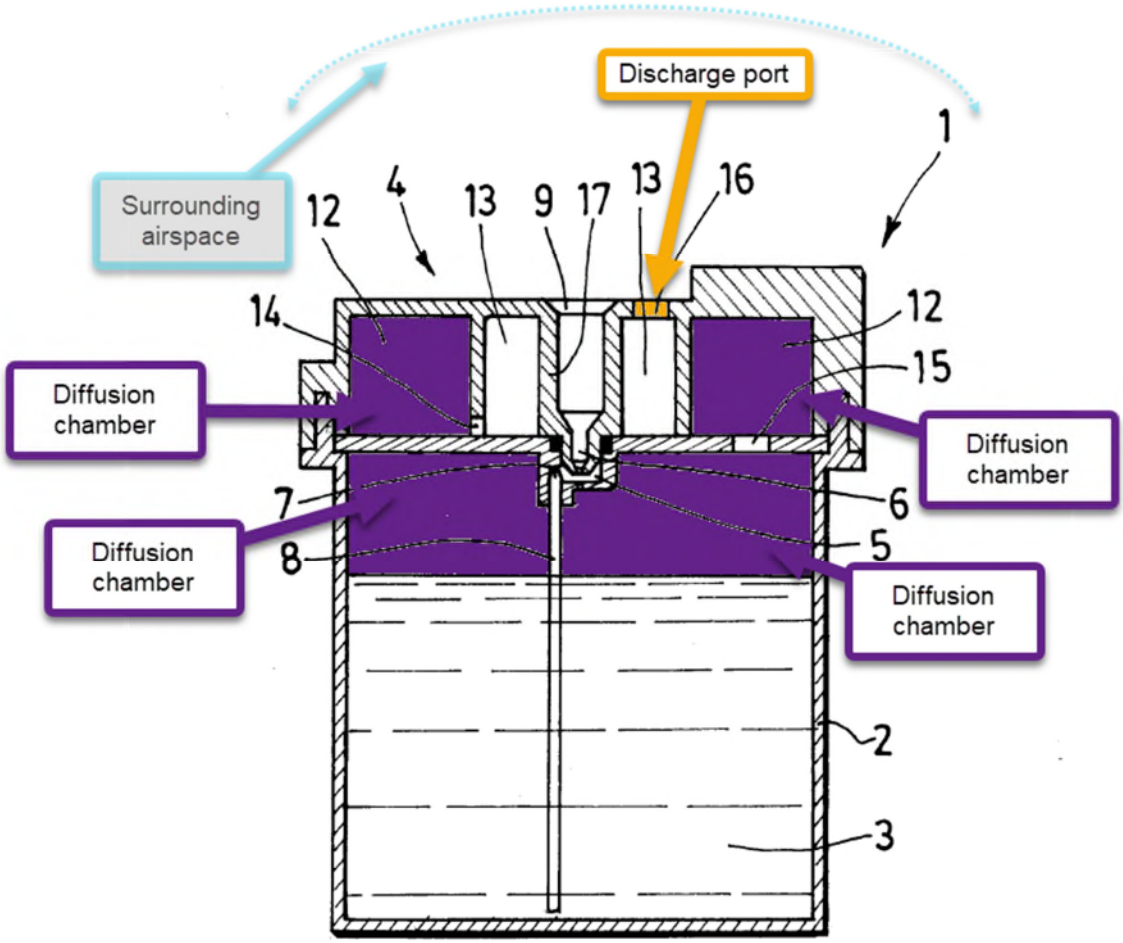

FIG.1

EX1016, FIG. 1

241. Goubet further teaches that, "[u]nder the effect of the compressed air pressure[,] the droplets … are pushed towards … the inlet 15 of the outer enclosure 12, into which they emerge. Within this outer enclosure 12, [the droplets,] under the pressure of the compressed air, are made to follow a baffled path, as shown by the

arrows G in Fig. 3. The droplets thus pass through the passage 14. . . . Still under the pressure of the compressed air, the microdroplets are pushed towards the outlet 16 of the inner enclosure 13. The microdroplets are diffused into the ambient air in the form of essential oil vapour." EX1016, 4:26-5:7.

242. It is my opinion that Goubet's inner chamber 13 that comprises outlet 16 for the microdroplets corresponds to a discharge port, and such discharge port is disposed in fluid communication between the diffusion chamber (*e.g.*, outer enclosure 12) and the surrounding airspace (*e.g.*, ambient air). *See* EX1016, Fig. 1.

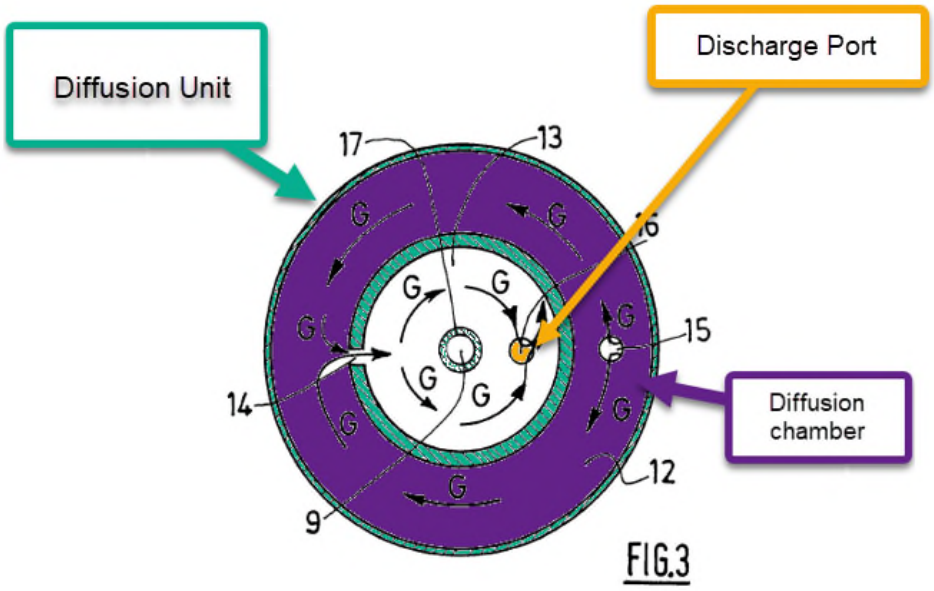

EX1016, FIG. 3

7[C] a diffusion assembly disposed in an operative engagement with said diffusion unit,

243. It is my opinion that Goubet discloses or renders obvious a diffusion assembly disposed in an operative engagement with said diffusion unit.

244. The ’094 Patent explains that “the diffusion assembly 200 comprises an air inlet 210 and an atomizer assembly 220.” EX1001, 5:5-6. The ’094 Patent further explains that the atomizer assembly is where compressed air and operative fluid are initially mixed to form fluid dispersion. *See, e.g.*, EX1001, Abstract, 2:26-34 (“an atomizer assembly … comprises … a mixing chamber” where “[c]ompressed air and fluid are initially mixed together … to form a fluid dispersion”), *Id.*, 5:5-9, 5:41-57.

245. Goubet teaches that the “compressed air is supplied by a compressor, not shown, and penetrates the diffuser head 4 via an air inlet channel 9, connected to said diffusion chamber 5, said inlet channel 9 being arranged inside said inner enclosure 13, concentrically to this inner enclosure. The path of the compressed air is shown in Fig. 2 by the arrows F. When the compressed air flows into the diffusion chamber 5, the essential oil 3 is drawn into the diffusion chamber 5 by the vacuum created and flows into this diffusion chamber 5 through the upper end 10 of the dip tube 8. Air and essential oil are mixed within the diffusion chamber 5 and a flow of oil droplets is created. This flow of oil droplets is then carried along by the compressed air and exits the diffusion chamber 5 through an outlet 11 towards the inside of the reservoir 2.” EX1016, 4:15-24.

246. A POSITA would understand that mixing liquid with compressed air describes an atomization process. EX1016, 5:16 (referring to the droplets as “highly

atomized oil mist"). Thus, Goubet teaches an atomizer assembly (*e.g.*, the assembly of components that atomize oil 3).

247. A POSITA would also understand Goubet to teach a diffusion assembly (*e.g.*, air inlet channel 9, inlet 6, diffusion chamber 5, outlet 11, and upper end 10 of dip tube 8).

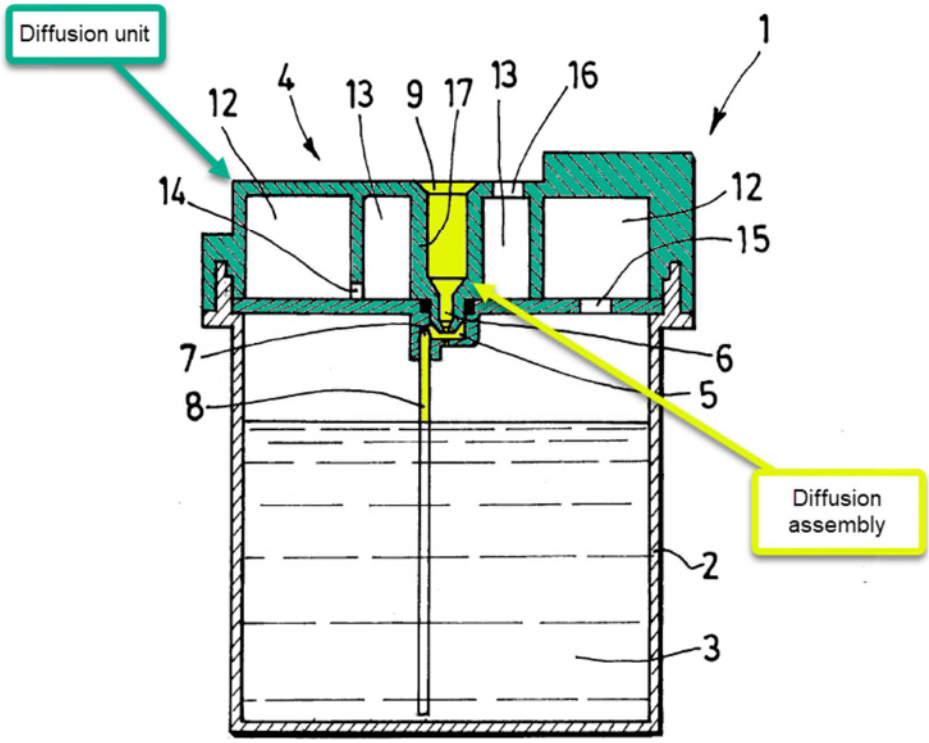

FIG.1

EX1016, FIG. 1

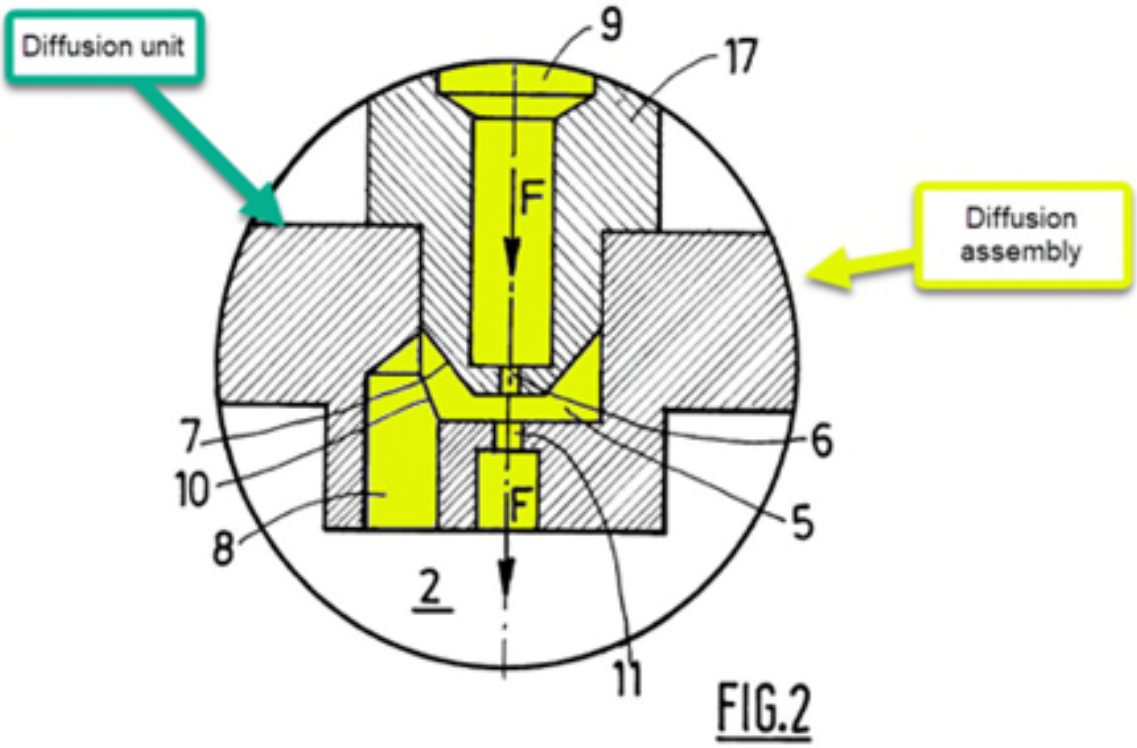

EX1016, FIG. 2

248. As illustrated in FIG. 1, Goubet's diffusion assembly is disposed within the wall 17 of diffuser head 4, and therefore, disposed in operative engagement with the diffusion unit. Goubet additionally recites "[u]nder the effect of the compressed air pressure, the droplets leaving the diffusion chamber 5 are pushed towards the inside of the reservoir 2 and then towards the inlet 15 of the outer enclosure 12, into which they emerge." EX1016, 4:26-28.

249. As a result, Goubet teaches that the diffusion assembly (*e.g.*, the combination of air inlet channel 9 and the assembly of components that atomize oil

3) is in operative engagement with said diffusion unit, and specifically the diffusion chamber (*e.g.*, shaded purple) thereof.

7[D] wherein said diffusion assembly comprises an atomizer assembly, and

250. It is my opinion that Goubet discloses or renders obvious a diffusion assembly comprising an atomizer assembly.

251. As described above with respect to claim limitation 7[C], Goubet discloses a diffusion assembly. Goubet teaches that, when in operation, "[t]he compressed air is supplied by a compressor, not shown, and penetrates the diffuser head 4 via an air inlet channel 9, connected to said diffusion chamber 5, said inlet channel 9 being arranged inside said inner enclosure 13, concentrically to this inner enclosure. The path of the compressed air is shown in Fig. 2 by the arrows F. When the compressed air flows into the diffusion chamber 5, the essential oil 3 is drawn into the diffusion chamber 5 by the vacuum created and flows into this diffusion chamber 5 through the upper end 10 of the dip tube 8. Air and essential oil are mixed within the diffusion chamber 5 and a flow of oil droplets is created. This flow of oil droplets is then carried along by the compressed air and exits the diffusion chamber 5 through an outlet 11 towards the inside of the reservoir 2." EX1016, 4:15-24.

252. A POSITA would thus understand that Goubet's compressed air inlet 6, diffusion chamber 5, outlet 11, and upper end 10 of dip tube 8 correspond to an atomizer assembly because within Goubet's atomizer assembly is

where compressed air and fluid are initially mixed together to form a fluid dispersion, and, as noted above, the ’094 Patent specification explains that the atomizer assembly is the location where compressed air and fluid are initially mixed together to form a fluid dispersion.

253. Thus, Goubet teaches a diffusion assembly (*e.g.*, air inlet channel 9, compressed air inlet 6, diffusion chamber 5, outlet 11, and upper end 10 of dip tube 8) comprising an atomizer assembly having the same structure as the atomizer assembly of the ’094 Patent, namely, an atomizer air inlet channel (*e.g.*, inlet 6, diffusion chamber 5, outlet 11, and upper end 10 of dip tube 8).

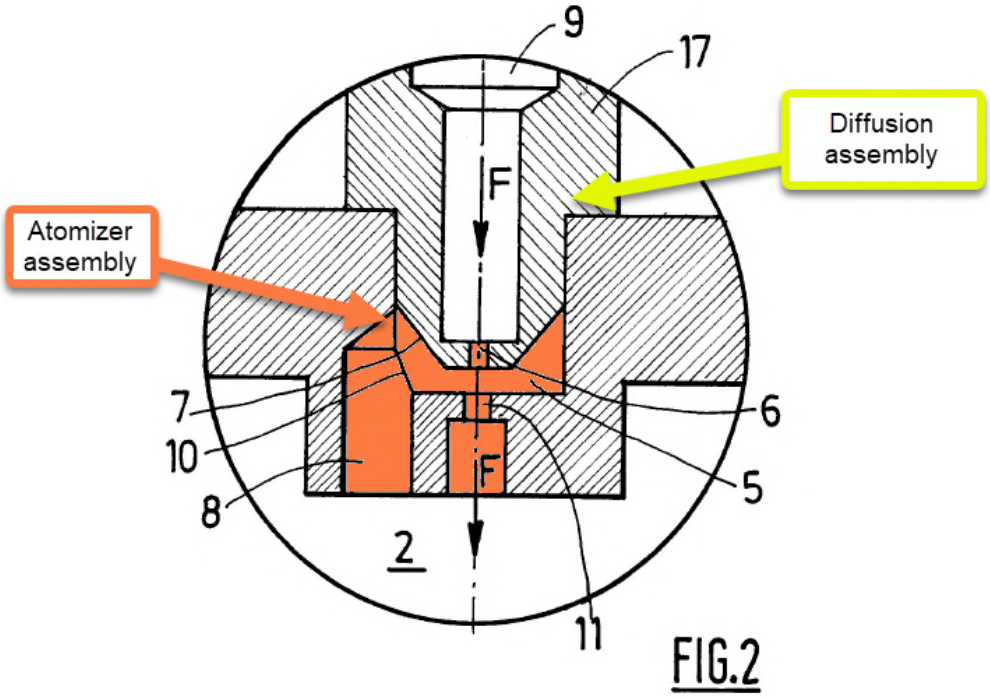

EX1016, FIG. 2

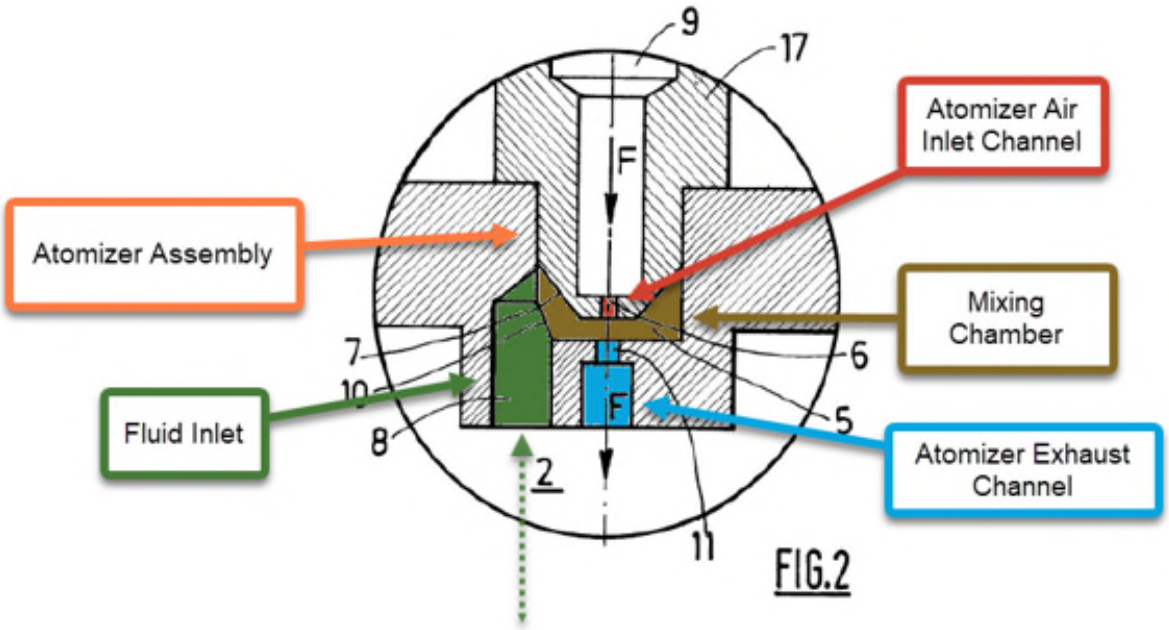

EX1016, FIG. 2

7[E] a silencer assembly having a silencer inlet, a silencer outlet, and a baffle,

254. It is my opinion that Goubet discloses or renders obvious a silencer assembly having a silencer inlet, a silencer outlet, and a baffle.

255. It is my understanding that Petitioner and Patent Owner stipulated in the parallel district court litigation that the term "baffle" means a "structure that disrupts the flow of fluid dispersion through the fluid dispersion assembly." EX1018, Exhibit B. I also understand that Patent Owner has contended that the term "silencer assembly" should be given its plain and ordinary meaning, or alternatively, construed to mean an "assembly that reduces the amount of noise generated during operation of the fluid dispersion assembly as the fluid dispersion flows

therethrough." EX1018, Exhibit A. I further understand that Patent Owner contends that "silencer chamber" means "silencer assembly," and thus a silencer assembly under Patent Owner's proposed construction is an assembly having a silencer inlet, a silencer outlet, and a baffle.

256. Goubet teaches that "the specific arrangement of the inlet, passage and outlet of the two enclosures" causes "the droplets [to] follow a very particular path, allowing their size to be reduced as much as possible." EX1016, 5:12-14. It is thus my opinion that Goubet's specific arrangement, referred to as a "baffle," corresponds to the baffle. Goubet's baffle(s) forces the droplets to follow a very particular path (*i.e.*, disrupts the flow of fluid dispersion through the fluid dispersion assembly) thereby reducing their size. EX1016, 2:27-28 ("the droplets follow a very particular path, allowing their size to be reduced as much as possible").

257. Goubet further teaches that the structure that disrupts the flow of fluid (*e.g.*, the "baffled path") and forces the droplets to follow a very particular path "enables the size of the oil microdroplets diffused into the ambient air to be reduced to a minimum." EX1016, 2:4-6, 5:12-15. "As a result, the oil mist diffused at the outlet of the diffuser is not harsh. Furthermore, due to the fineness of the microdroplets, this mist is non-flammable. The diffusion is controlled, gentle, and particularly quiet." EX1016, 2:6-8, 5:15-16 ("[T]his reduction in droplet size enables a non-harsh, highly atomized oil mist or vapour to be silently diffused.").

258. A POSITA would understand that passage 14 between outer enclosure 12 and inner enclosure 13 forming at least one baffle would also limit sound associated therewith by creating acoustical impedance discontinuities owing to the sudden cross-sectional changes that reflect sound back to the source. *Supra*, ¶¶ 87-88. Further, a POSITA would know that flow obstructions reduce turbulence and associated flow generated noise.

259. It is thus my opinion that a POSITA would understand Goubet to teach a silencer assembly because Goubet discloses a specific arrangement of structures that reduces the amount of noise generated during operation as the fluid dispersion flows therethrough. *See* EX1016, Fig. 1.

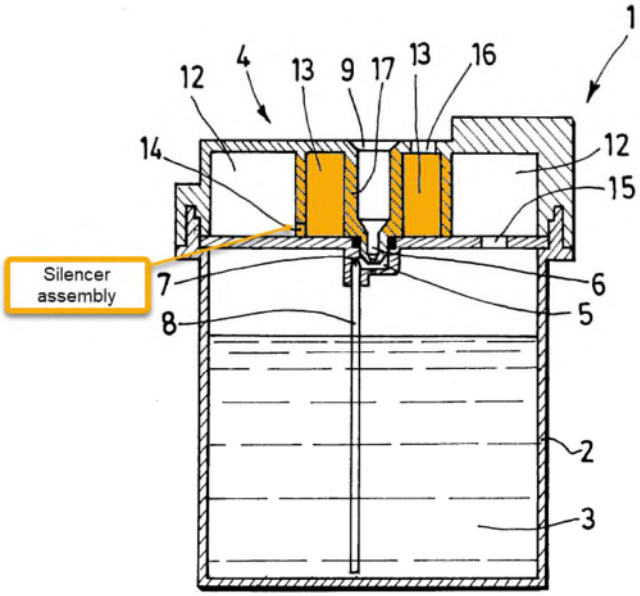

FIG.1

EX1016, FIG. 1

102516241.3

260. Goubet teaches that "[t]he diffusion head (4) further comprises vaporization means (12, 13, 14), … characterized in that said vaporization means comprise at least two concentric circular enclosures, an outer enclosure (12) and an inner enclosure (13), communicating with each other via a passage (14), said two enclosures and said passage forming at least one baffle." EX1016, claims 1, 2.

261. Further, Goubet teaches that, "[u]nder the effect of the compressed air pressure, the droplets leaving the diffusion chamber 5 are pushed towards the inside of the reservoir 2 and then towards the inlet 15 of the outer enclosure 12, into which they emerge. Within this outer enclosure 12, they collide with the walls separating the outer enclosure 12 from the inner enclosure 13 and, under the pressure of the compressed air, are made to follow a baffled path, as shown by the arrows G in Fig. 3. The droplets thus pass through the passage 14, then strike the walls separating the inner enclosure 13 from the walls 17 of the compressed air inlet channel 9. Along this path, and as a result of the many shocks [(*i.e.*, wall impacts)] they receive, the droplets are broken up into micro-droplets. Still under the pressure of the compressed air, the microdroplets are pushed towards the outlet 16 of the inner enclosure 13. The microdroplets are diffused into the ambient air in the form of essential oil vapour." EX1016, 4:26-5:7.

262. A POSITA would readily understand that structures that disrupt the flow of fluid will dampen sound waves associated with such flow, as taught by the

’094 Patent itself. *See, e.g.*, EX1001, 6:1-8, 7:1-11, 7:24-37, and 7:64-8:2 (teaching that sound dampening is a byproduct of disrupted fluid flow).

263. It is thus my opinion that a POSITA would understand that collisions occurring within Goubet’s fluid dispersion assembly, and, in particular, the collisions occurring at the walls separating the outer enclosure 12 from the inner enclosure 13, and at the walls separating the inner enclosure 13 from the walls 17 of the compressed air inlet channel 9, will increase uniformity of droplets because such wall collisions continue to separate out large droplets or break large droplets into smaller droplets. Specifically, the wall impacts (shocks) experienced by the droplets will decrease the size distribution of the droplets and lead to more uniformity.

264. It is thus my opinion that a POSITA would understand Goubet to teach a silencer assembly (*e.g.*, inner enclosure 13, passage 14, and initial orifice at the outlet of microdroplets to ambient air 16) that has a silencer inlet (*e.g.*, passage 14), a silencer outlet (*e.g.*, outlet 16 of inner enclosure 13), and at least one baffle (*e.g.*, wall bounding inner enclosure 13 and/or wall 17 bounding air inlet channel 9.

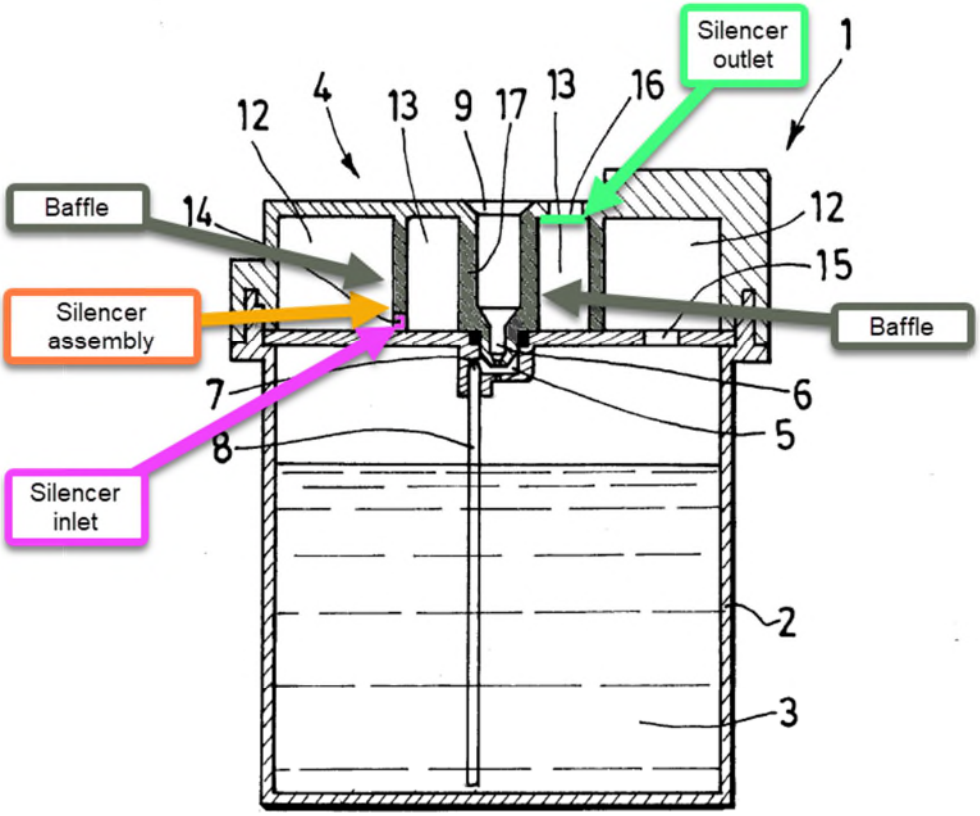

FIG.1

EX1016, FIG. 1

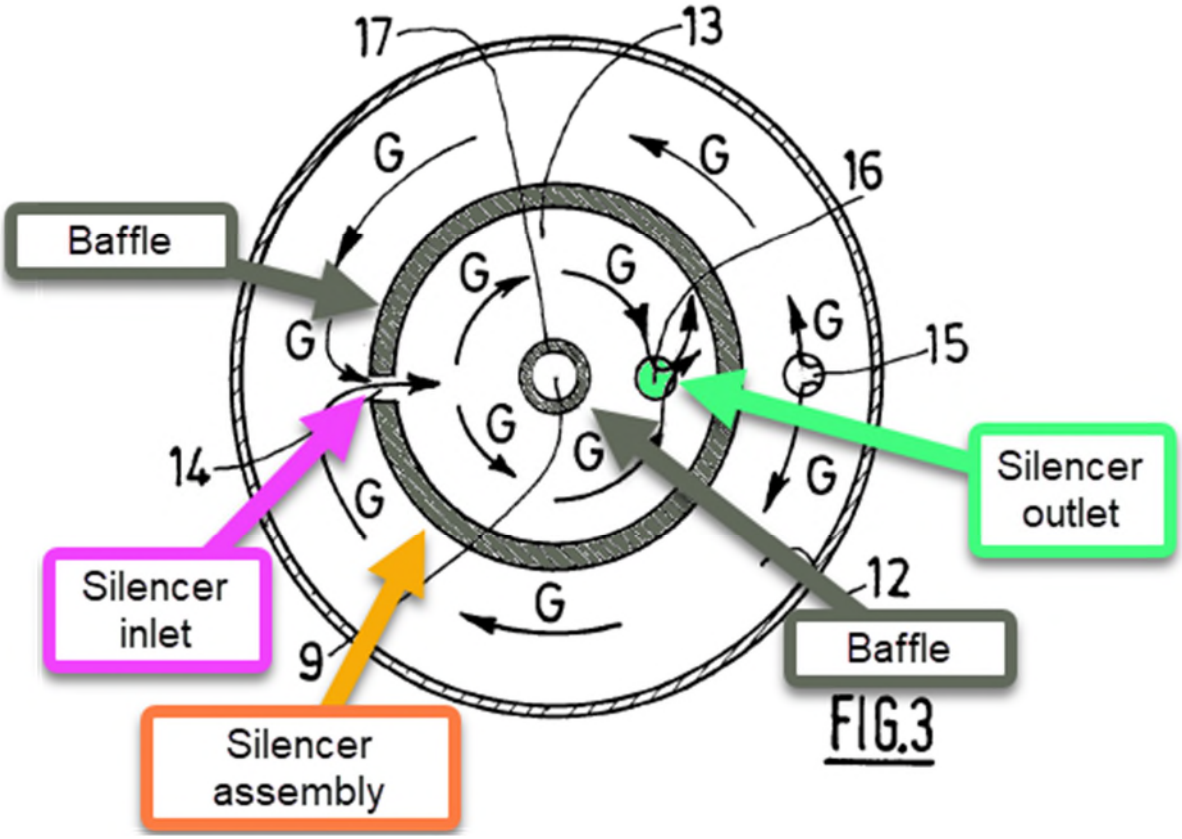

EX1016, FIG. 3

7[F] wherein said baffle partially restricts movement of the fluid dispersion through said silencer chamber from said silencer inlet to said silencer outlet, thereby dampening sound waves generated during operation of said fluid dispersion assembly

265. Goubet discloses or renders obvious a baffle that partially restricts movement of the fluid dispersion through said silencer chamber from said silencer inlet to said silencer outlet, thereby dampening sound waves generated during operation of said fluid dispersion assembly.

266. As described above, Goubet teaches that, "[u]nder the effect of the pressure of the compressed air, the droplets leaving the diffusion chamber 5 are

pushed towards the inside of the reservoir 2 and then towards the inlet 15 of the outer enclosure 12, into which they emerge. Within this outer enclosure 12, they collide with the walls separating the outer enclosure 12 from the inner enclosure 13 and, under the pressure of the compressed air, are made to follow a baffled path, as shown by the arrows G in Fig. 3. The droplets thus pass through the passage 14, then strike the walls separating the inner enclosure 13 from the walls 17 of the compressed air inlet channel 9. Along this path, and as a result of the many shocks they receive, the droplets are broken up into micro-droplets." EX1016, 4:26-5:4.

267. Thus, by forming a baffled path through which the droplets receive many shocks by colliding with the baffle as they enter the silencer chamber from the silencer inlet and go through to the silencer outlet, Goubet's at least one baffle partially restricts movement of the fluid dispersion through the silencer chamber from the silencer inlet to the silencer outlet, thereby dampening sound waves generated during operation of said fluid dispersion assembly. *See* EX1016, Figure 3.

268. A POSITA would readily understand that Goubet's baffled path formed by the baffle(s) will increase small scale turbulence locally near the baffle, which increases mixing of compressed air and fluid. This localized increased turbulence will divide droplets into increasingly smaller droplets. The smaller the range of droplet sizes, the more uniform their size becomes.

269. A POSITA would also readily understand that structures that disrupt the flow of fluid will dampen sound waves associated with such flow, as taught by the ’094 Patent itself. *See, e.g.*, EX1001, 6:1-8, 7:1-11, 7:24-37, and 7:64-8:2 (teaching that sound dampening is a byproduct of disrupted fluid flow). That is, while a structure like Goubet’s baffle(s), that disrupts the flow of fluid, will increase local turbulence and cause greater mixing of air and fluid, the structure will increase the pressure drop (or flow resistance), thereby decreasing the overall volume flow rate through the system relative to an absence of baffles. Such an effect reduces the overall magnitude of turbulence in the system.

270. It is thus my opinion that a POSITA would understand Goubet’s baffle(s) (*e.g.*, walls facing the inner enclosure 13) will have a sound dampening effect owing to a change in acoustic impedance that reflect sound back towards the source as the fluid dispersion flows from air inlet 15 into outer enclosure 12, along the baffled path, into passage 14, and then into inner enclosure 13. It is also my opinion that said baffle(s) partially restricts movement of the fluid dispersion through said silencer chamber from said silencer inlet to said silencer outlet, thereby lowering turbulence and flow generated noise generated during operation of said fluid dispersion assembly.

271. It is also my opinion that a POSITA would understand that the microdroplets that have been reduced in size as much as possible meet the limitation

of a “fluid dispersion”. A POSITA would appreciate that the circular shape of the baffled path necessitates that the droplets twist and turn several times, thereby breaking the droplets into increasingly smaller and more uniform droplets. In this regard, only droplets of a particular size (and smaller) will be able to follow the air flow to navigate each additional turn without crashing into one of the walls and either forming a liquid film on the wall or breaking into smaller droplets. As a result, each turn will continually filter out droplets over a certain size, and/or continually reduce the size of droplets, leaving only droplets of a substantially uniform size to continue along the flow path.

272. It is thus my opinion that Goubet’s dual circular flow path at least suggests that the droplet size distribution is substantially uniform by the time the microdroplets reach and pass through outlet 16, thereby meeting the “fluid dispersion” term.

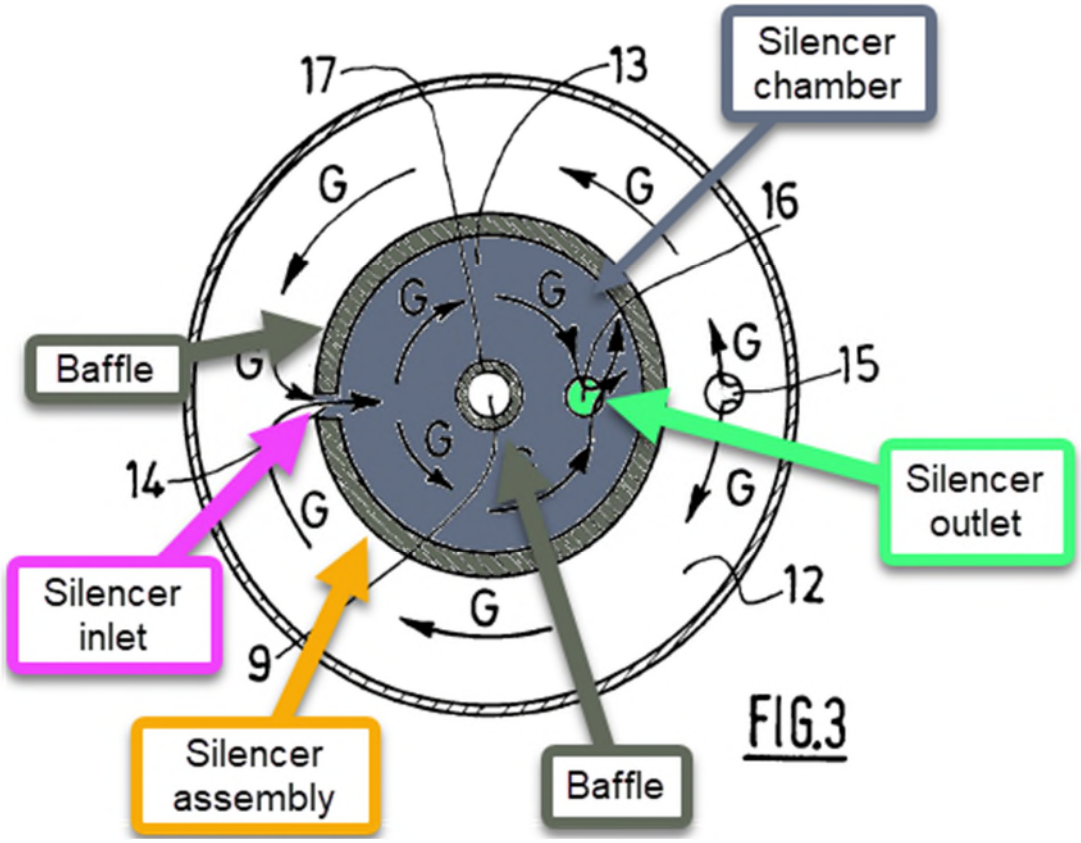
Silencer chamber
17
13
16
G
Baffle
15
14
Silencer outlet
Silencer inlet
12
9
Silencer assembly
Baffle

FIG.3

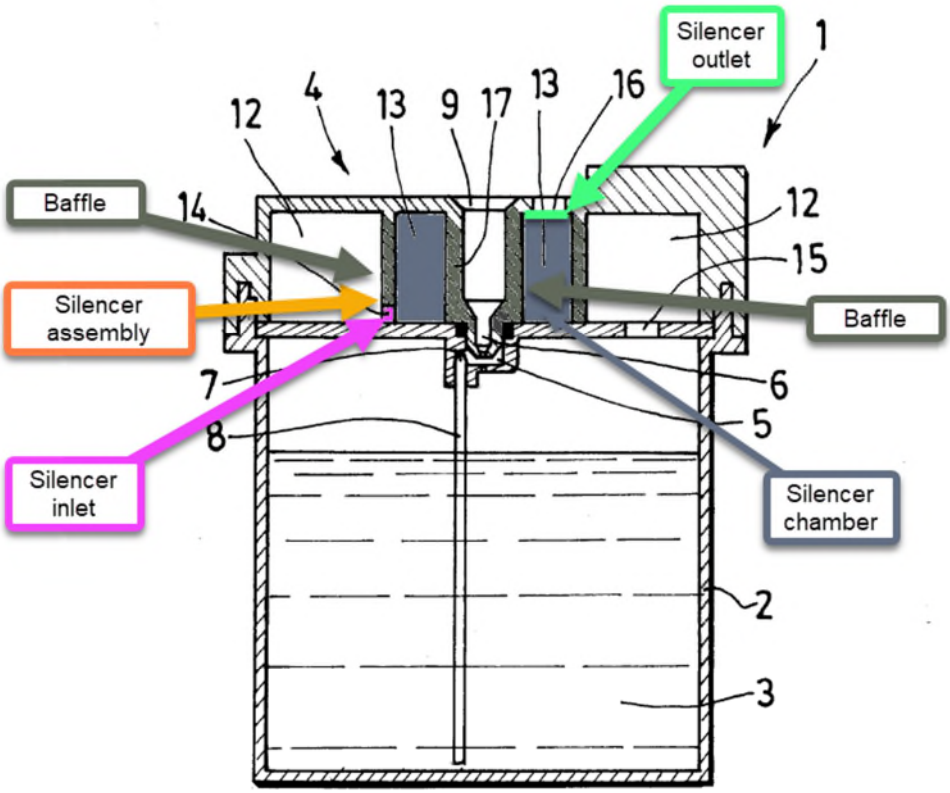

FIG.1

273. Moreover, Patent Owner has taken the position in the parallel District Court proceeding that "said silencer chamber" should be construed as "said silencer assembly." In other words, it is Patent Owner's position that the claims do not require a "silencer chamber." It is my opinion that Goubet satisfies the limitation under Patent Owner's broad interpretation. Goubet also satisfies limitation 7[F] if a "silencer chamber" is required, as depicted in the figures above.

274. Although Goubet does not explicitly use the term "substantially uniform" with respect to the atomized droplet size, a POSITA would appreciate that Goubet teaches fluid dispersion that comprises substantially uniform droplets.

275. In discussing known essential oil diffusers, Goubet explains that "compressed air generally arrives in the diffuser head rather abruptly, with the result that a large quantity of oil droplets is rapidly … diffused into the ambient atmosphere … [and] such diffusion is also noisy." EX1016, 1:10-13. To remedy this problem and as noted above, the atomizer of Goubet includes vaporization means defining a circular and "very particular path, allowing [the droplet] size *to be reduced as much as possible*" before the microdroplets are "silently diffused" into the ambient air. *See* EX1016, 5:12-16 (emphasis added).

276. It is my opinion that microdroplets that have been reduced in size as much as possible within the constraints of Goubet's structure meet the limitation of a "fluid dispersion". A POSITA would appreciate that the circular shape of the baffled path necessitates that the droplets twist and turn several times, which will divide the droplets into increasingly smaller and thus more uniform droplets. More particularly, only droplets of a particular size (and smaller) will be able to follow the air flow to navigate each additional turn without crashing into one of the walls. That is, each turn will continually filter out droplets over a certain size, such that only smaller and more substantially uniform droplets of a particular size will continue to

flow along the path. As a result, Goubet dual path will divide droplets into substantially uniform microdroplets by the time the flow passes through outlet 16, thereby meeting the limitation "fluid dispersion".

277. In the event Patent Owner argues that the resulting atomized droplets do not meet the "fluid dispersion" limitation, it is my opinion that it would have been obvious to modify Goubet to include additional enclosures to achieve an even narrower range of droplet sizes, such that a plurality (at least two of the droplets) of droplets were substantially uniform in size.

278. A POSITA would have been motivated to add additional enclosures to the dual enclosure design because it was an objective of Goubet to reduce droplet size as much as possible. EX1016, 5:13-16; *see also* EX1016, 2:16-18 (explaining that "said vaporization means comprise at least two concentric circular enclosures," and thus suggesting additional circular enclosures were already contemplated). Furthermore, a POSITA would appreciate that additional enclosures would result in further atomization and smaller, and more uniform droplets.

279. It is also my opinion that a POSITA would have had a reasonable expectation of success in adding additional enclosures because the combination would not require undue experimentation or modification of the existing components and because a further enclosure would not introduce any incompatibilities with Goubet's existing design.

280. It is thus my opinion that Goubet renders obvious claim 7 of the ’094 Patent.

> **Claim 8. The fluid dispersion assembly as recited in claim 7 wherein said atomizer assembly comprising an atomizer air inlet channel, a fluid inlet, a mixing chamber, and an atomizer exhaust channel.**

281. Goubet discloses or renders obvious the fluid dispersion assembly as recited in claim 7 wherein said atomizer assembly comprising an atomizer air inlet channel, a fluid inlet, a mixing chamber, and an atomizer exhaust channel.

282. Goubet teaches that “the diffusion chamber 5 comprises a compressed air inlet 6, a venturi cone 7, and an oil inlet in the form of the upper end 10 of a dip tube 8 connected to the essential oil 3 contained in the reservoir 2.” EX1016, 3:31-4:2. Goubet explains that “[a]ir and essential oil are mixed within the diffusion chamber 5 and a flow of oil droplets is created.” EX1016, 4:21-22.

283. With respect to the mixing chamber, Patent Owner has taken the claim construction position that the mixing chamber means “a region where the operative fluid is combined with compressed air.” EX1018, Exhibit B. It is thus my opinion that Goubet’s diffusion chamber corresponds to the mixing chamber because it is a region where the operative fluid (*e.g.*, essential oil) is combined with compressed air.

284. Further, based on Goubet’s teachings described above, it is my opinion that a POSITA would understand Goubet’s compressed air inlet 6 corresponds to an

atomizer air inlet channel, Goubet's upper end 10 of the dip tube 8 corresponds to a fluid inlet, Goubet's diffusion chamber 5 corresponds to a mixing chamber, and Goubet's outlet 11 corresponds to an atomizer exhaust channel. *See* EX1016, Fig. 2.

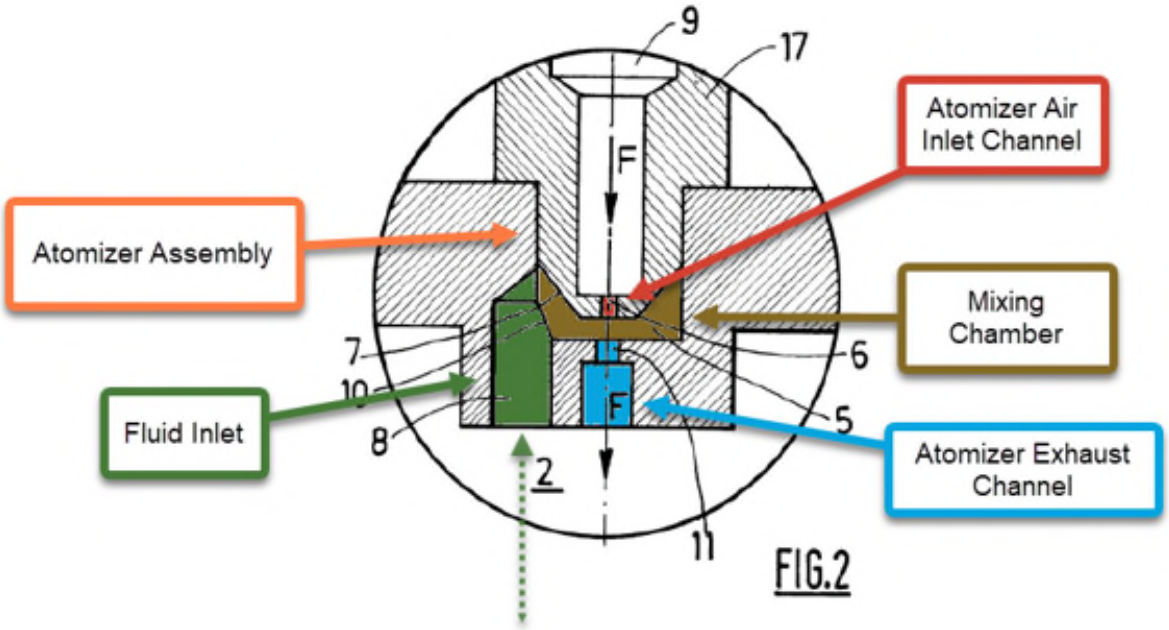

EX1016, FIG. 2

285. It is thus my opinion that a POSITA would understand that Goubet's atomizer assembly comprises an atomizer air inlet channel (*e.g.*, compressed air inlet 6), a fluid inlet (*e.g.*, upper end 10 of the dip tube 8), a mixing chamber (*e.g.* diffusion chamber 5), and an atomizer exhaust channel (*e.g.*, outlet 11).

> **Claim 9[A] The fluid dispersion assembly as recited in claim 8 wherein said atomizer air inlet channel is interconnected to the compressed air source and said fluid inlet disposed in fluid communication with the operative fluid in the container,**

286. It is my opinion that Goubet discloses or renders obvious the fluid dispersion assembly as recited in claim 8 wherein said atomizer air inlet channel is interconnected to the compressed air source and said fluid inlet disposed in fluid communication with the operative fluid in the container.

287. Goubet teaches, "[a]s shown in Fig. 1 and 2, the diffuser head 4 comprises a diffusion chamber 5 within which oil droplets are produced. The diffusion chamber 5 comprises a compressed air inlet 6, a venturi cone 7, and an oil inlet in the form of the upper end 10 of a dip tube 8 connected to the essential oil 3 contained in the reservoir 2." EX1016, 3:30-4:2.

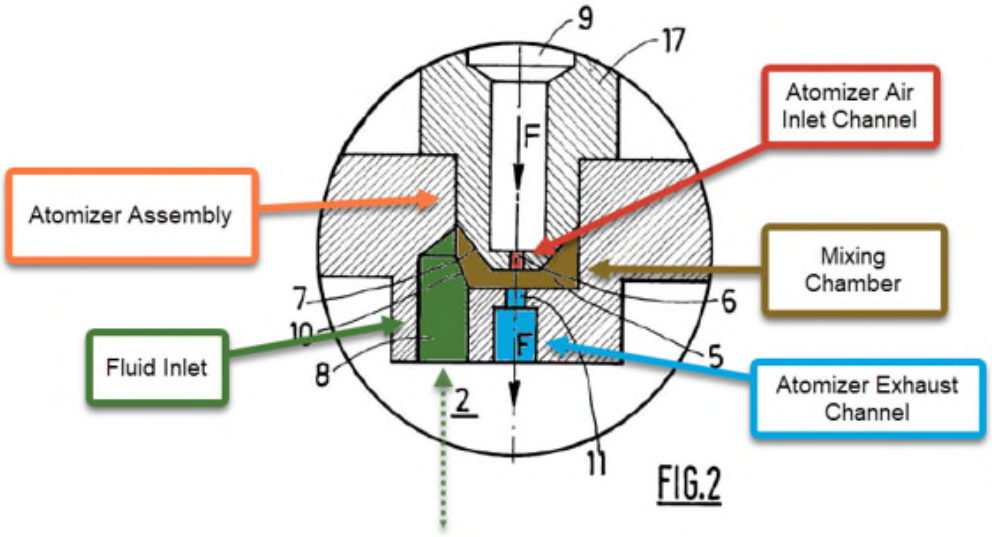

EX1016, FIG. 2

288. It is thus my opinion that a POSITA would understand Goubet's atomizer air inlet channel (*e.g.*, inlet 6) is interconnected to the compressed air source (not shown but referred to as a compressor, compressed air supply, pneumatic

compressed air distribution system, and/or compressed air distribution network is a compressed air source).

289. Moreover, under Patent Owner's broad construction, the compressed air source term is not a structural limitation and instead is merely a source of air that is above ambient pressure. Goubet teaches providing air to the fluid dispersion assembly, and the figures show that the diameter through which the air passes is reduced, thereby raising the pressure of the air. Goubet satisfies the limitation under this broad interpretation as well.

9[B] wherein the compressed air and the operative fluid are mixed together in said mixing chamber to form the fluid dispersion.

290. It is my opinion that Goubet discloses or renders obvious the compressed air and the operative fluid are mixed together in said mixing chamber to form the fluid dispersion.

291. It is my opinion that a POSITA would understand Goubet's upper end 10 of the dip tube 8 corresponds to a fluid inlet that is disposed in fluid communication with the operative fluid (*e.g.*, oil 3) in the container (*e.g.*, tank and/or reservoir 2), and the compressed air and operative fluid are mixed together in the mixing chamber (*e.g.*, diffusion chamber 5) to form the fluid dispersion (*i.e.*, "Air and essential oil are mixed within the diffusion chamber 5 and a flow of oil droplets is created."). *See* Goubet at Fig. 1.

292. Goubet teaches compressed air and essential oil are mixed together in the mixing chamber (*e.g.*, diffusion chamber 5) to form the fluid dispersion as demonstrated above with respect to claim limitation 7[D] set forth in Ground 3. Again, Patent Owner has construed the term "mixing chamber" to mean, a region where the operative fluid is combined with compressed air. *Id*. EX1018, Exhibit B. Thus, when the fluid dispersion is within the "mixing chamber," as is the case in limitation 9[B], the atomized liquid need not include "a plurality of substantially uniform droplets." Instead, the operative fluid need only be combined with compressed air. This is taught by Goubet.

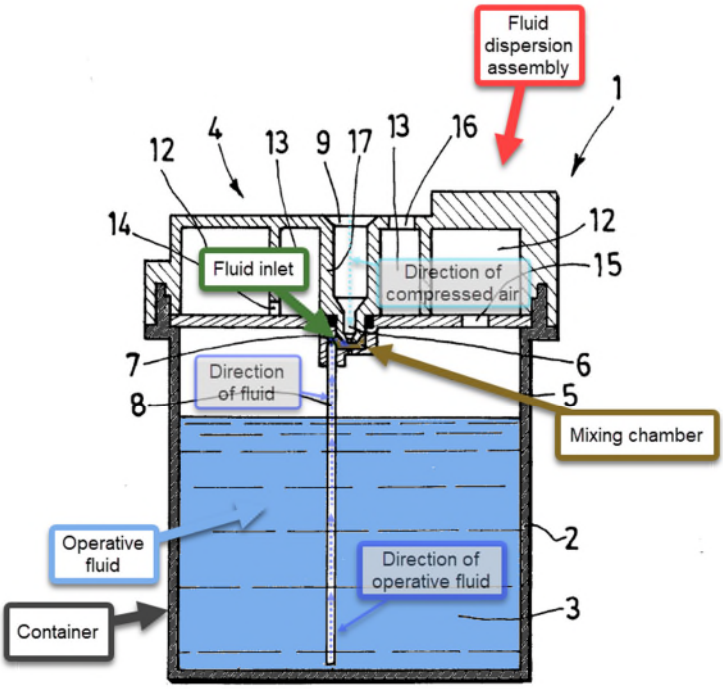

FIG.1

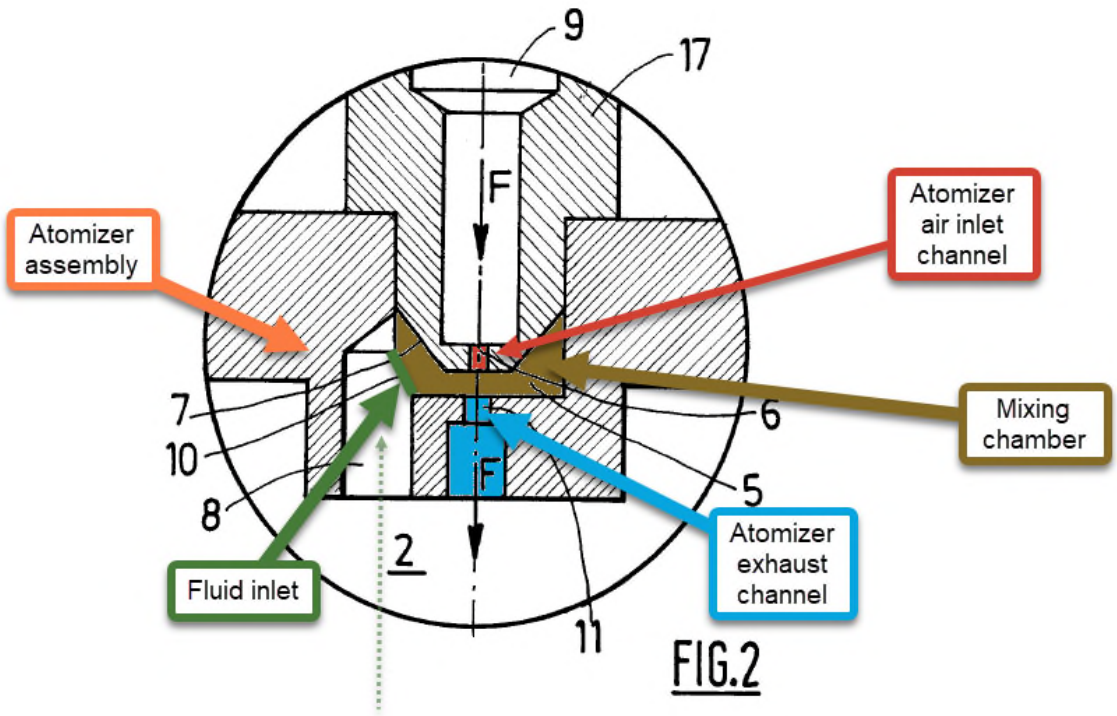

Claim 11. The fluid dispersion assembly as recited in claim 7 wherein said diffusion chamber facilitates formation of the fluid dispersion prior to discharge of the fluid dispersion from said diffusion chamber through said discharge port and into the surrounding airspace.

293. Goubet discloses or renders obvious the fluid dispersion assembly as recited in claim 7 wherein said diffusion chamber facilitates formation of the fluid dispersion prior to discharge of the fluid dispersion from said diffusion chamber through said discharge port and into the surrounding airspace.

294. As described above, Goubet teaches that, "[u]nder the effect of the compressed air pressure, the droplets leaving the diffusion chamber 5 are pushed towards the inside of the reservoir 2 and then towards the inlet 15 of the outer enclosure 12, into which they emerge. Within this outer enclosure 12, they collide

with the walls separating the outer enclosure 12 from the inner enclosure 13 and, under the pressure of the compressed air, are made to follow a baffled path, as shown by the arrows G in Fig. 3. The droplets thus pass through the passage 14, then strike the walls separating the inner enclosure 13 from the walls 17 of the compressed air inlet channel 9. Along this path, and as a result of the many shocks they receive, the droplets are broken up into micro-droplets. Still under the pressure of the compressed air, the microdroplets are pushed towards the outlet 16 of the inner enclosure 13. The microdroplets are diffused into the ambient air in the form of essential oil vapour." EX1016, 4:26-5:7.

295. Because Goubet teaches that the droplets collide with the walls separating the outer enclosure 12 from the inner enclosure 13 (*e.g.*, within the diffusion chamber of inner enclosure 13), a POSITA would understand that Goubet's diffusion chamber facilitates formation of the fluid dispersion prior to discharge. Indeed, Goubet teaches that it is the result of the many shocks the droplets receive that breaks them into microdroplets, and such shocks are delivered, at least in part, within the diffusion chamber prior to discharge.

296. Further, a POSITA would understand that Goubet's teaching of the microdroplets being diffused into the ambient air to correspond to the fluid dispersion being discharged through the discharge port into the surrounding airspace.

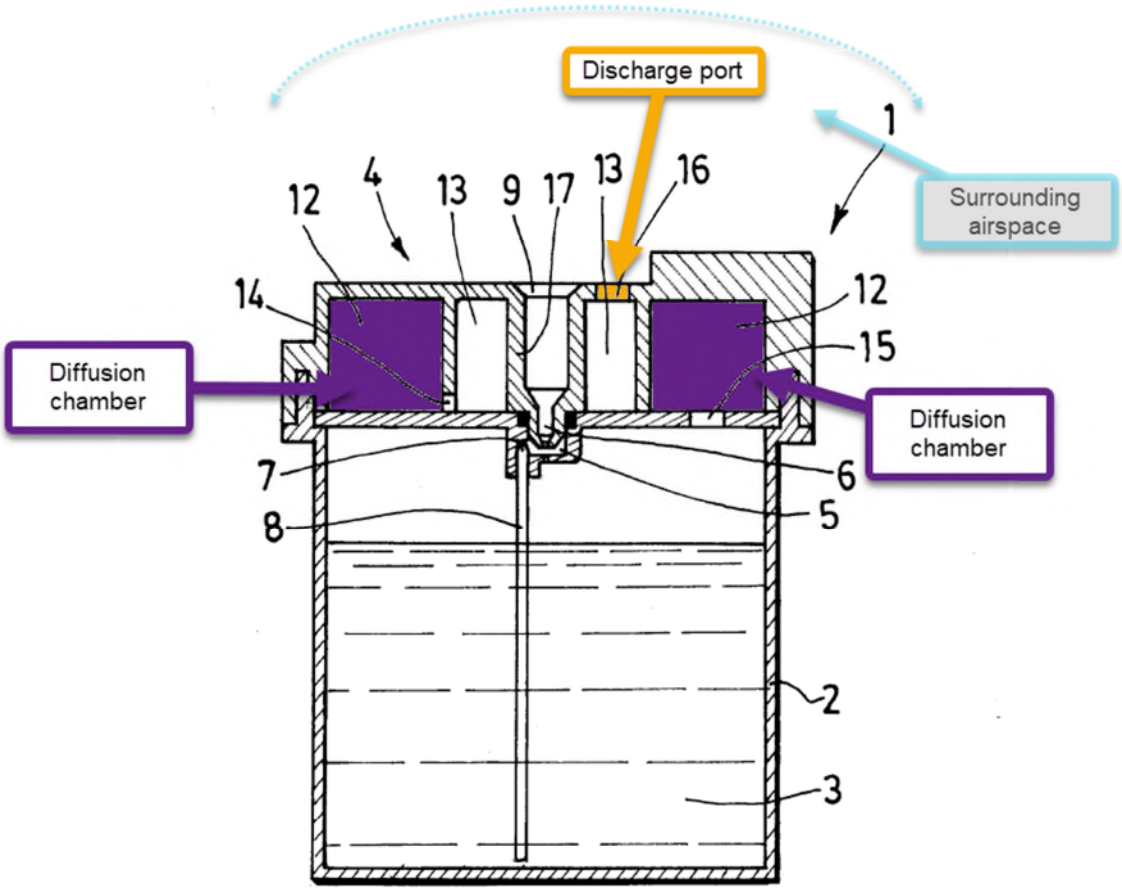

FIG.1

D. GROUND 4: Claims 7-9 and 11 are rendered obvious under 35 U.S.C. § 103 by Goubet in view of Kaiser.

297. As discussed above in Ground 3, it is my opinion that Goubet alone renders obvious claims 7-9 and 11. As part of that analysis, I noted that Goubet discloses an assembly including a baffle (*e.g.*, wall bounding inner enclosure 13 and/or wall 17 bounding air inlet channel 9) that disrupts and restricts the flow of atomized droplets. A POSITA would readily understand that such a structure would

have a dampening effect on sound waves and, together with the other structural elements discussed in Ground 3, meet the limitation of a "silencer assembly." *See generally* EX1016; *supra*, ¶¶ 239-260. A POSITA would also readily understand that Goubet's structure would produce microdroplets with a "substantially uniform" diameter, *i.e.*, a fluid dispersion.

298. In this regard, I noted that Goubet discloses a diffusion unit (*e.g.*, diffuser head 4) that generates and discharges particularly fine microdroplets to improve control over the diffusion, to reduce the harshness of the aroma, and to quietly disperse the essential oil into the air. EX1016, 2:6-8.

299. Nevertheless, the certified translation of Goubet does not explicitly state that its microdroplets are "substantially uniform" in diameter. Thus, Ground 4 relies on Kaiser in combination with Goubet for limitations 1[E] and 1[F], which recite the "fluid dispersion" term. I explain here in Ground 4 why a POSITA would have found it obvious in view of Kaiser and the general state of the art at the time to alter Goubet to include one or more additional circular enclosures within its structure, which would result in smaller droplets and greater uniformity. Notably, Ground 4 still relies on the teachings of Goubet for the other limitations of claims 7-9 and 11 as previously discussed in Ground 3.

300. Kaiser demonstrates that it was well known in the field at the time of the invention that droplets of greater uniformity result in uniform droplet

evaporation. Ex-1014, pg. 43 ("critical to uniform evaporation and burning is a good control of the size distribution of the resulting aerosol").

301. Accordingly, if Goubet is found not to teach a "fluid dispersion," a POSITA would have been motivated to modify Goubet to include additional enclosures that result in "fluid dispersion."

302. In this regard, I note that Goubet states that its "vaporization means comprise ***at least*** two concentric circular enclosures," which form "***at least***" one baffle. EX1016, 2:16-19; *see also id.*, pg. 6 (claim 2). It is my opinion that the disclosure of "at least two" concentric circular enclosures (and the corresponding "at least one" baffle) would indicate to a POSITA that additional circular enclosures and additional baffles could be added to Goubet's design, which would further improve atomization (more uniform droplets); they would also further decrease noise.

303. A POSITA would been motivated to add additional circular enclosures because the components were clearly well known in light of Goubet's disclosure itself. A POSITA would have been motivated to add the additional enclosures in view of Kaiser's teaching that uniform droplets result in uniform evaporation, which, in turn, would improve the smoothness (*i.e.*, less harsh) of the aroma generated as the oil droplets evaporate in the surrounding airspace. A POSITA would also have been motivated to add the additional enclosures because Goubet itself teaches that such enclosures will decrease the size of the microdroplets.

304. Further, a POSITA would have been motivated to add additional enclosures because numerous references in the field of art disclosed fluid dispersion assemblies seeking to minimize the noise of the device, and such references are in a common field of endeavor seeking to solve the same or substantially similar problems as Goubet. *See, e.g.*, EX1008, ¶ [0043] ("The radial compressor fluid delivery system may also comprise a means for noise and heat suppression. This can include noise abatement enclosures, outlet noise suppression, and any other means for reducing the noise and heat produced by the radial compressor fluid delivery system. Means for noise and heat suppression include, but are not limited to, design of the enclosure structure itself, incorporation of materials known in the art that insulate sound and heat, wrapping pipes and tubing with sound and heat insulating materials, muffling and controlling the direction of air flow as well as the intake and output of air. Other mechanical devices such as cooling fans or noise and heat abatement engineering may be incorporated within the overall equipment design to maximize result. The mechanical devices may or may not be controlled by the microcontroller based on the required results. For example, as depicted in FIG. 6, the fluid delivery system 100 is enclosed by noise and heat abatement material 42. The inherit use of a radial compressor reduces the noise produced compared to prior technologies.").

305. A POSITA would have recognized that fluid dispersion assemblies that use a compressed air source can be noisy and would have found it obvious to apply a silencer assembly therein to improve user enjoyment and satisfaction.

306. It is my opinion that a POSITA would have been motivated to combine the teachings of Goubet with the teachings of the general state of the art to improve atomization (*e.g.*, form uniform aerosolized particles) and to dampen sound waves, thereby enhancing user experience. More specifically, both Goubet and the general state of the art identified drawbacks with conventional, essential oil atomizers, namely such atomizers are troublingly noisy and do not optimally atomize essential oil droplets. To further enhance user satisfaction, a POSITA would have been motivated to add an additional circular structure to Goubet's existing circular structures to more uniformly atomize the droplets and further dampen the noise. Specifically, a POSITA would have been motivated to include additional acoustic impedance discontinuities as known in the state of the art to reduce radiated acoustical power generated by air handling equipment.

307. A POSITA would implement the alteration of Goubet without undue experimentation for the same reasons discussed above in Ground 3. A POSITA would have had a reasonable expectation of success that adding an additional enclosure would increase the baffled path for the fluid flow to travel, which would further restrict fluid flow, and break the droplets into increasingly small

microdroplets. Such an addition would result in only those microdroplets that are sufficiently atomized to pass through the assembly.

308. A POSITA would also have a reasonable expectation of success in further reducing the noise generated during operation of the assembly for the reasons discussed above. Thus, to provide droplet uniformity and noise reduction, a POSITA would have been motivated to alter Goubet by adding an additional circular structure as roughly depicted in the figure below.

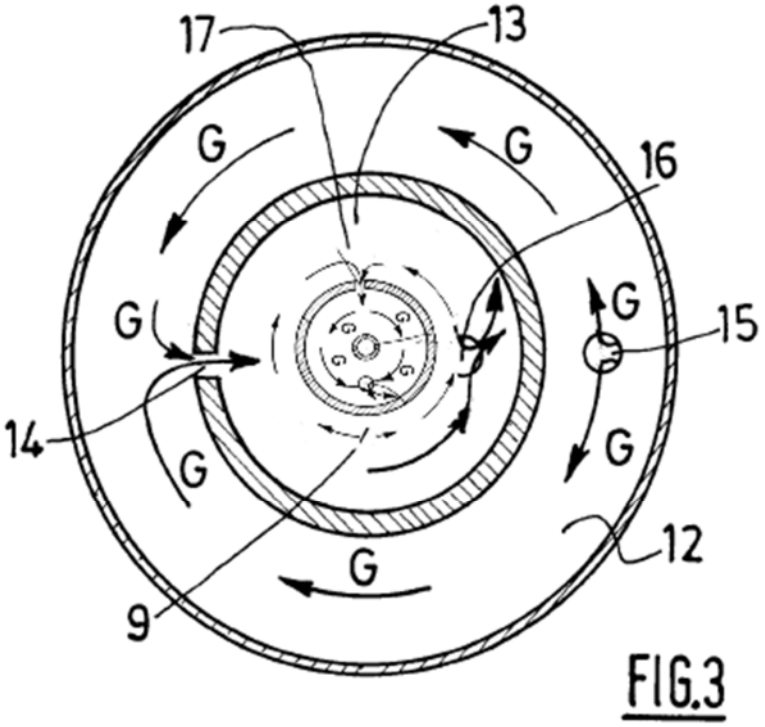

309. Goubet could either accommodate an additional circular enclosure within the existing structure, as shown above, or could increase the size of the outermost circular enclosure to accommodate an additional circular enclosure. It is

my opinion that such a modification would be a simple addition, that could be repeated as many times as necessary to achieve the desired uniformity in fluid dispersion droplets and the desired dampening of sound waves.

E. GROUND 5: Claims 7-9 and 11 are rendered obvious under 35 U.S.C. § 103 by Gao

Claim 7. [PRE] A fluid dispersion assembly is operatively interconnected to a container of an operative fluid and a compressed air source to generate and discharge a fluid dispersion into a surrounding airspace, said fluid dispersion assembly comprising:

310. As noted above, Patent Owner's position in the parallel District Court proceeding is that the preamble is not a limitation. I have been instructed to accept that position purposes of this Petition.

311. In the event the Board finds the preamble is limiting, Gao teaches a fluid dispersion assembly that is operatively interconnected to a container of an operative fluid and a compressed air source to generate and discharge a fluid dispersion into a surrounding airspace. *See, e.g.*, Gao at Figure 1.

312. Gao is titled and directed to an "Atomizer for Atomizing Essence or Essential Oil." *See* EX1013, INID Code (54); FIG 1. Annotated Figure 1 of Gao, reproduced below, illustrates Gao's fluid dispersion assembly (*e.g.*, atomizer).

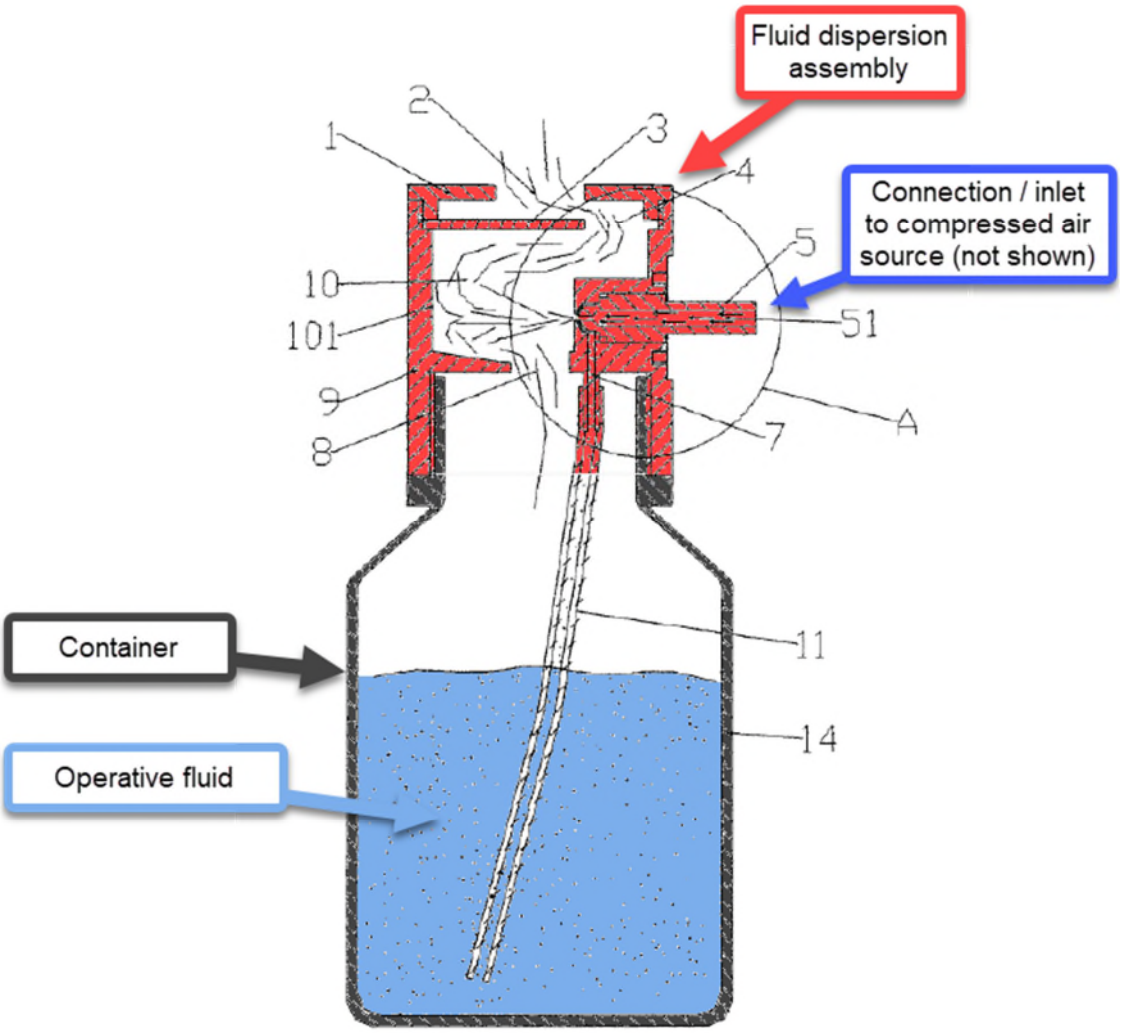

FIG. 1

313. In view of the title, figures, claims, and specification, it is my opinion that a POSITA would understand that Gao's atomizer for atomizing essence or essential oil into the surrounding airspace of a room is a fluid dispersion assembly.

314. Gao's atomizer (*i.e.*, fluid dispersion assembly) has an "atomizer body … composed of a main body 9 and a cover body 1." EX1013, ¶ [0020]. The main body 9 has "an upper cavity and a lower cavity," and the inner wall of the lower

cavity has "an internal thread for fixing the entire atomizer on an essence or essential oil bottle 14." EX1013, ¶ [0020].

315. A POSITA would thus understand Gao to disclose a fluid dispersion assembly (*e.g.*, atomizer body 9, cover body 1, and all components thereto, as approximately illustrated in red) that is operatively interconnected (*e.g.*, internal thread fixing the atomizer on an oil bottle) to a container of an operative fluid.

316. Gao's "atomizer body is provided with a first cavity and a second cavity 13," and a "gas flow nozzle 5 is fixed in the second cavity 13." EX1013, ¶ [0019]. "A coaxial gas flow pipe 51 is provided inside the gas flow nozzle 5." EX1013, ¶ [0023]. The "gas inlet on [the] side of the atomizer, *i.e.*, the inlet of the gas flow pipe 51 is connected to [an] air pump [not shown]." EX1013, ¶ [0025].

317. Patent Owner has taken the position that an air pump qualifies as a compressed air source. Thus, accepting that position for purposes of this Petition, it is my opinion that Gao teaches "a compressed air source" (*e.g.*, pump that pushes air into gas flow pipe 51 inside gas flow nozzle 5). When air is forced into gas flow pipe 51, the pressure of the air is increased above ambient pressure due to the constricted volume.

318. Gao further teaches that, "[w]hen the air pump is in operation, a gas flow is blown out through the pipe," causing liquid in the bottle to be "sucked into the atomizing cavity 6 based on the siphon principle, and the liquid and the gas are

fully mixed." EX1013, ¶ [0025]. Thus, when the atomizer is in operation, the "high-speed gas-liquid mixture is then ejected through a gas [] flow port and hits an inner wall 101 of the lower part cavity 10." EX1013, ¶ [0025]. This causes the liquid to be "atomized into micron-sized fine particles. The smallest particles will float in the air, and drift out through the through hole 4." EX1013, ¶ [0025].

319. Thus, Gao's fluid dispersion assembly is operatively interconnected to both a container of an operative fluid (*e.g.*, essence or essential oil bottle 14) and a compressed air source (*e.g.*, pump). A POSITA would understand that the operative interconnections to the container of the operative fluid and the compressed air source cause Gao's fluid dispersion assembly to generate and discharge a fluid dispersion into a surrounding airspace.

320. As noted above, Patent Owner's primary position is that the preamble is non-limiting. Patent Owner's secondary position is that, to the extent the preamble is limiting, it does not contain any structural limitations and that it should be given its plain an ordinary meaning. Patent Owner's third position is that if the preamble is limiting, and the "compressed air source" term is a structural limitation, then a pump satisfies the limitation. In this regard, Patent Owner's alternative claim construction position is that a compressed air source means "a source of air above ambient pressure."

321. Gao teaches a compressed air source under any of Patent Owner's positions. Gao's air pump, which is connected to gas flow pipe 51, pushes air into the atomizer. Thus, it is my opinion that a POSITA would understand Gao to teach a source of air (*e.g.*, an air pump) that is above ambient pressure (*e.g.*, the pressure is increased above ambient pressure when it enters gas flow pipe 51, or when the area through which the air passes is decreased).

7[A] a diffusion unit at least partially defining a diffusion chamber;

322. Gao discloses or renders obvious a fluid dispersion assembly comprising a diffusion unit at least partially defining a diffusion chamber.

323. Gao's "atomizer body is composed of a main body 9." EX1013, ¶ [0020]. Gao's "main body 9 is provided with an upper cavity and a lower cavity." EX1013, ¶ [0020]. Gao's high-speed gas-liquid mixture is ejected through a gas "flow port and hits an inner wall 101 of the lower part cavity 10, thus the liquid is atomized into micron-sized fine particles." EX1013, ¶ [0025]. "The smallest particles will float in the air, and drift out through the through hole 4 and the atomizing gas outlet 2". EX1013, ¶ [0025]; *see also* EX1013, Figure 1.

324. A POSITA would understand Gao's main body 9 and components thereto correspond to a diffusion unit as described in the '094 Patent, as approximately depicted in turquoise. *See* EX1013, Annotated Fig. 1.

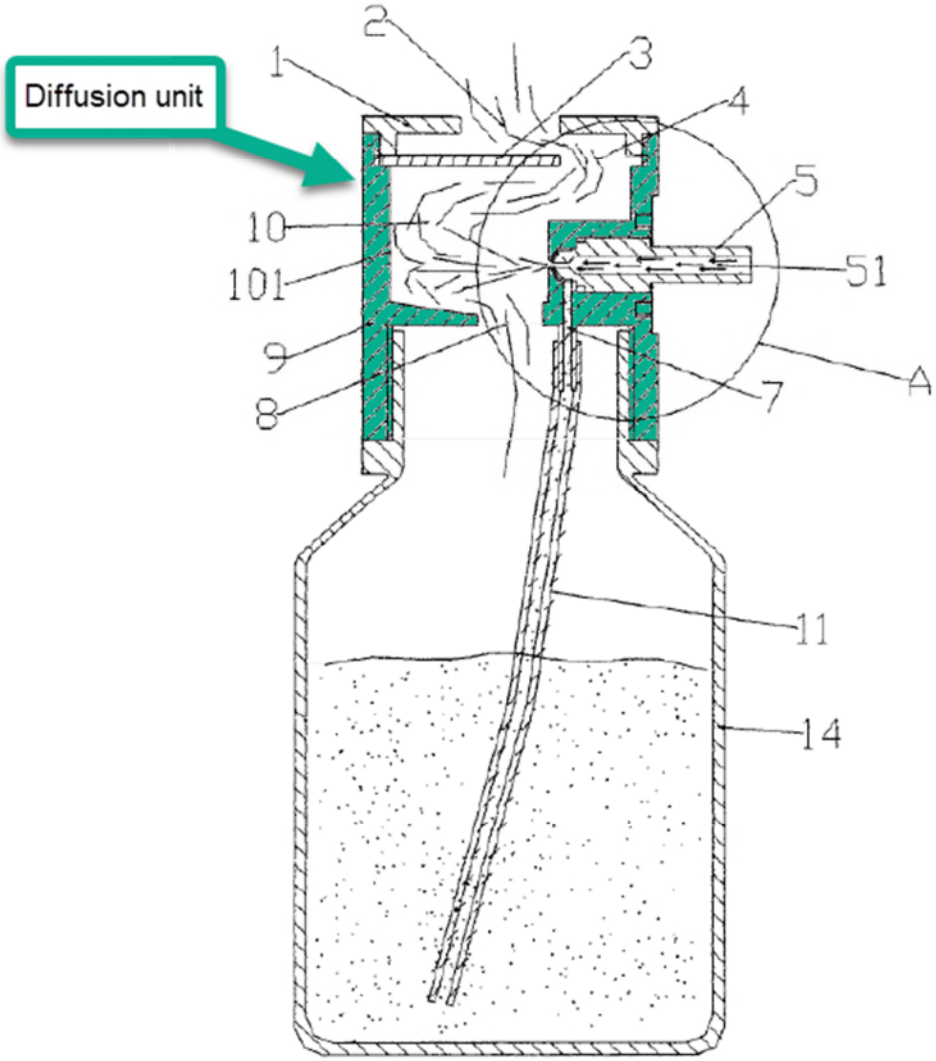

FIG. 1

EX1013, FIG. 1

325. Further, a POSITA would understand Gao's lower part cavity within main body 9 corresponds to a diffusion chamber because the lower part cavity atomizes the fluid into micron-sized particles (*e.g.*, diffuses the mixture of fluid and

air into a fluid dispersion prior to discharge). *See* EX1013, ¶ [0025] ("high-speed gas-liquid mixture is then ejected through a gas flow port and hits an inner wall 101 of the lower part cavity 10," causing the liquid to be "atomized into micron-sized fine particles", the smallest of which "will float in the air, and drift out … with the rising gas flow to be converted into gas through heat exchange with the [surrounding] air").

326. Thus, it is my opinion that Gao discloses a diffusion unit that at least partially defines a diffusion chamber (*e.g.*, lower part cavity within main body 9 as approximately depicted in purple).

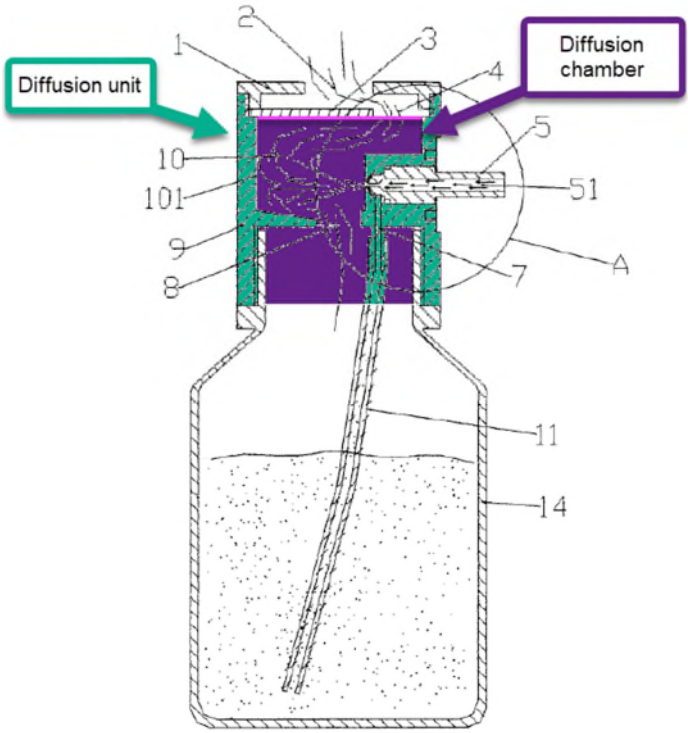

FIG. 1

EX1013, FIG. 1

7[B] a discharge port disposed in fluid communication between said diffusion chamber and the surrounding airspace;

327. Gao discloses or renders obvious a fluid dispersion assembly comprising a discharge port disposed in fluid communication between said diffusion chamber and the surrounding airspace.

328. As described above, when in operation, a source of compressed air is supplied to Gao's atomizer in the gas flow pipe 51, thereby sucking liquid into atomizing cavity 6 based on the siphon principle, and fully mixing the liquid with the gas (*e.g.*, air). EX1013, ¶ [0025]. Gao's "high-speed gas-liquid mixture is then ejected through a gas flow port and hits an inner wall 101 of the lower part cavity 10," causing the liquid to be "atomized into micron-sized fine particles." EX1013, ¶ [0025]. Gao teaches that "***[t]he smallest particles will float in the air, and drift out through the through hole 4 and the atomizing gas outlet 2 with the rising gas flow to be converted into gas through heat exchange with the air***." EX1013, ¶ [0025] (emphasis added).

329. A POSITA would thus understand Gao to teach a discharge port (*e.g.*, gas outlet 2) that is disposed in fluid communication between the diffusion chamber (*e.g.*, lower part cavity 10 within main body 9) and the surrounding airspace. That the discharge port is disposed in fluid communication between the diffusion chamber and the surrounding airspace is illustrated in annotated Figure 1. The discharge of droplets is shown in black lines exiting gas outlet 2.

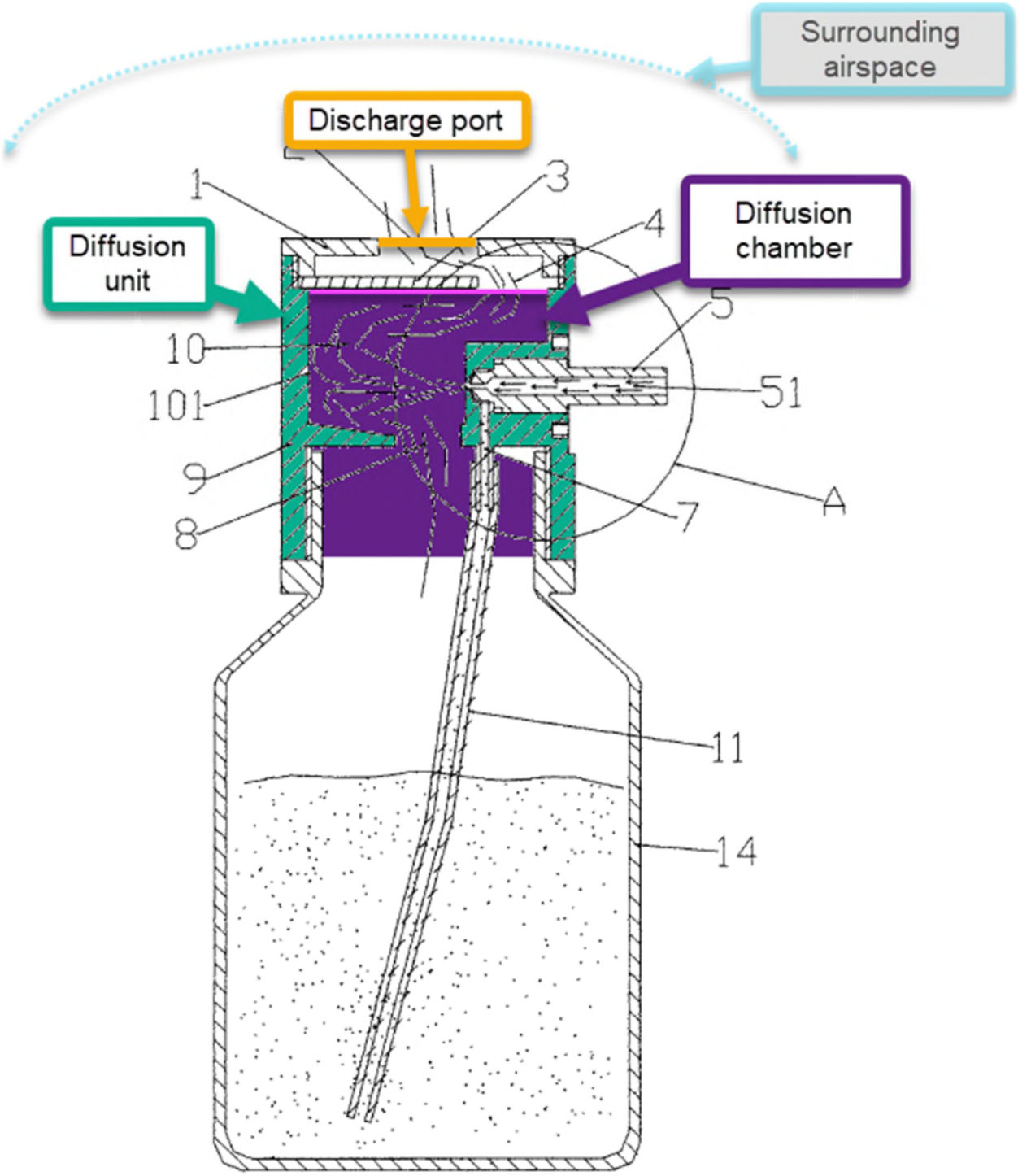

图 1

EX1013, FIG. 1

7[C] a diffusion assembly disposed in an operative engagement with said diffusion unit,

330. Gao discloses or renders obvious a diffusion assembly disposed in an operative engagement with said diffusion unit.

331. The ’094 Patent explains that “the diffusion assembly 200 comprises an air inlet 210 and an atomizer assembly 220.” EX1001, 5:5-6.

332. Gao teaches a “gas flow nozzle 5 is fixed in the second cavity 13. . . . An atomizing cavity 6 is formed between the gas flow nozzle 5 and the bottom wall of the second cavity. A liquid pipeline 7 is further provided on the atomizer body, and the liquid pipeline 7 is in communication with the atomizing cavity 6.” EX1013, ¶ [0019]. Gao further discloses “[t]he liquid is sucked into the atomizing cavity 6 based on the siphon principle, and the liquid and the gas are fully mixed … then ejected through a gas flow flow port.” *Id*., ¶ [0025]. A POSITA would understand that mixing liquid with air is an atomization process.

333. A POSITA would understand that the features within section ‘A’ in Gao’s Figure 1, shown in greater detail in Figure 2, correspond to a diffusion assembly. And Gao’s diffusion assembly is in operative engagement with the diffusion unit (*e.g.*, second cavity 13 of main body 9). *See* EX1013, ¶ [0025]. That is, Gao’s “lower part cavity 10 is in communication with a bottom part of the second cavity 13 through the gas flow spray hole 12.” *Id.*, ¶ [0019]. In this way, a POSITA

would understand that Gao's diffusion assembly is disposed in an operative engagement with Gao's diffusion unit.

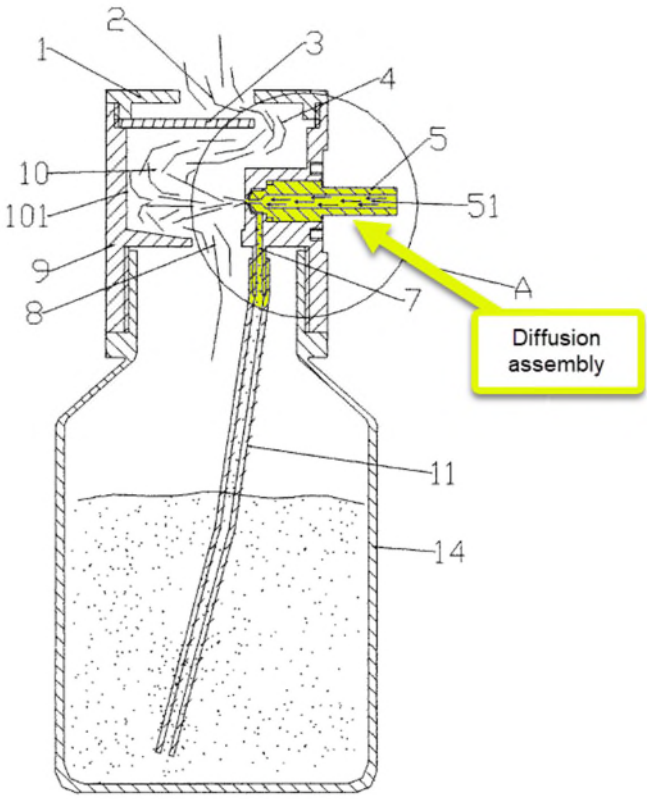

图 1

EX1013, FIG. 1

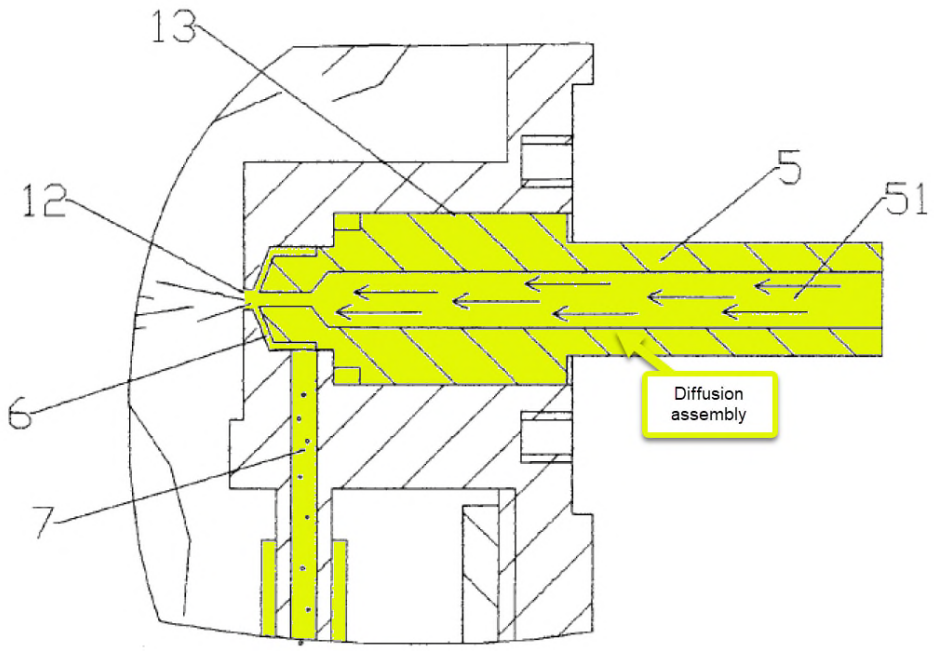

FIG. 2

EX1013, FIG. 2

7[D] wherein said diffusion assembly comprises an atomizer assembly, and

334. Gao discloses or renders obvious a diffusion assembly comprising an atomizer assembly.

335. As described above with respect to claim limitation 7[C], Gao discloses a diffusion assembly. Gao teaches that, when in operation, "[t]he liquid is sucked into the atomizing cavity 6 based on the siphon principle, and the liquid and the gas are fully mixed." EX1013, ¶ [0025]. A POSITA would thus understand that Gao's atomizing cavity 6 corresponds to an atomizer assembly.

336. As shown in Gao's Figure 2, Gao's diffusion atomizes liquid into micron-sized fine particles and disperses the same through the gas flow spray hole 12. Thus, Gao discloses a diffusion assembly that comprises an atomizer assembly

(*e.g.*, atomizing cavity 6 formed between the gas flow nozzle 5 and the bottom wall of the second cavity 13).

337. Gao's "gas inlet on [the] side of the atomizer, *i.e.*, the inlet of the gas flow pipe 51, is connected to the air pump." EX1013, ¶ [0025]. Thus, Gao teaches an atomizer air inlet channel. "A gap is provided between the gas flow nozzle 5 and the bottom wall of the second cavity 13. An atomizing cavity 6 is formed between the gas flow nozzle 5 and the bottom wall of the second cavity. A liquid pipeline 7 is further provided on the atomizer body, and the liquid pipeline 7 is in communication with the atomizing cavity 6." EX1013, ¶ [0019].

338. Thus, Gao teaches a fluid inlet (*e.g.*, liquid pipeline 7) and a mixing chamber (*e.g.*, atomizing cavity 6). "The high-speed gas-liquid mixture is then ejected through a gas flow flow port [12]." *Id.* Thus, Gao also teaches an atomizer exhaust channel.

339. It is thus my opinion that, as shown in FIG. 2, Gao teaches an atomizer assembly comprises an atomizer air inlet channel (*e.g.*, the inlet of gas flow pipe 51), a fluid inlet (*e.g.* the upper end of liquid pipeline 7), a mixing chamber (*e.g.*, atomizing cavity 6), and an atomizer exhaust channel (*e.g.*, gas flow spray hole 12).

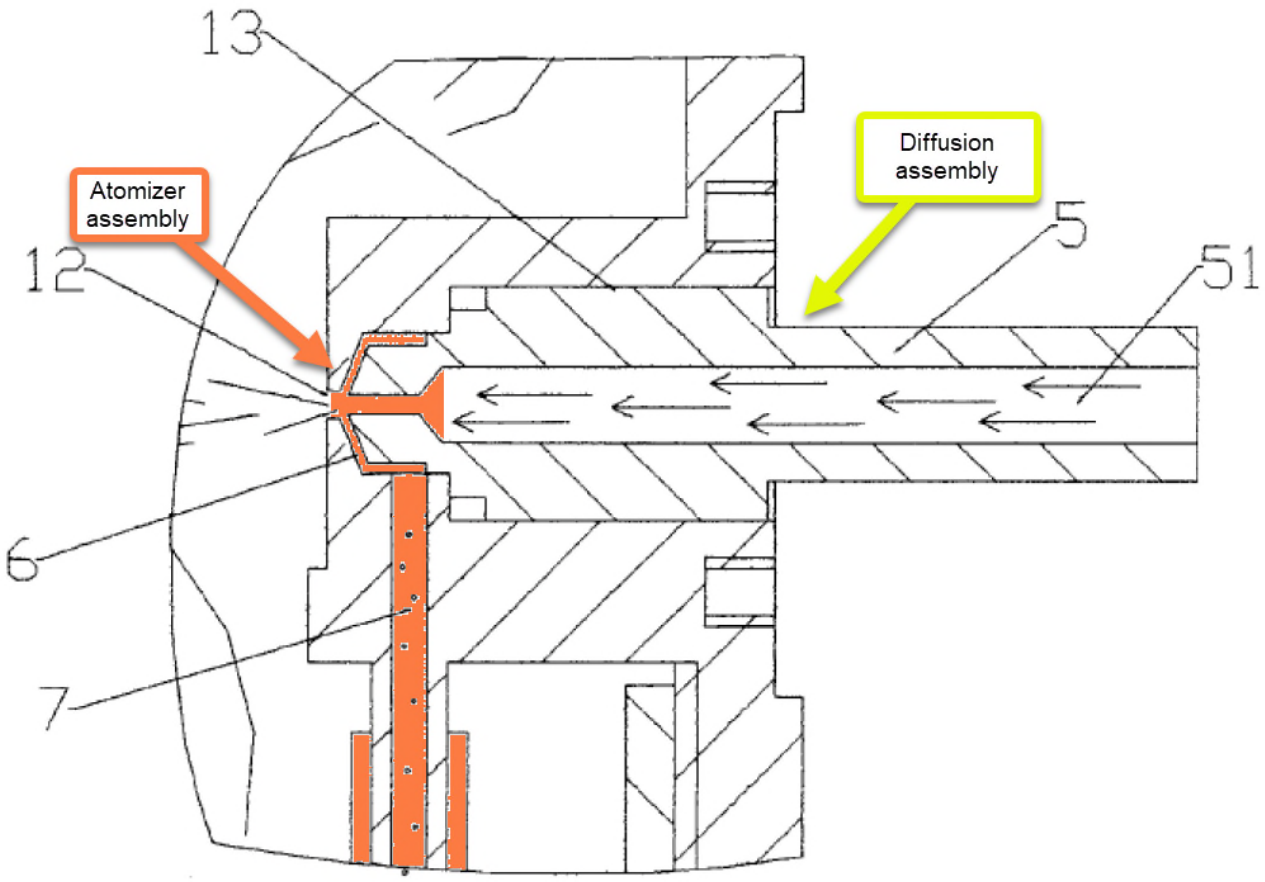

FIG. 2

EX1013, FIG. 2

7[E] a silencer assembly having a silencer inlet, a silencer outlet, and a baffle,

340. Gao discloses or renders obvious a silencer assembly having a silencer inlet, a silencer outlet, and a baffle.

341. It is my understanding that Petitioner and Patent Owner stipulated in the parallel district court litigation that the term "baffle" means a "structure that disrupts the flow of fluid dispersion through the fluid dispersion assembly." EX1018, Exhibit B. Patent Owner has contended that the term "silencer assembly"

should be given its plain and ordinary meaning, or alternatively, construed to mean an "assembly that reduces the amount of noise generated during operation of the fluid dispersion assembly as the fluid dispersion flows therethrough." EX1018, Exhibit B.

342. It is my opinion that Gao teaches these limitations under any of these definitions.

343. Gao teaches that "[a]n upper part of the first cavity is provided with a baffle 3." EX1013, ¶ [0019]. A POSITA would understand Gao's baffle 3 to correspond to a baffle,

344. Further, Gao's "baffle 3 is fixed to an upper part of the upper cavity by means of the cover body 1. A side of the baffle 3 is spaced from a side of the upper cavity, thereby forming an outlet for the rising gas flow, which is the through hole 4 provided between the top part cavity and the lower part cavity." Gao at ¶ [0021].

345. A POSITA would understand Gao's through hole 4 upstream of baffle 3 to correspond to a silencer inlet.

346. For the reasons discussed in Grounds 1 and 3 with respect to the limitations 7[E] and 7[F], a POSITA would understand that a baffle disrupts fluid flow, which thereby limits sound associated therewith. *See also* EX1001, 6:1-8, 7:1-11, 7:24-37, and 7:64-8:2 (teaching that sound dampening is a byproduct of disrupted fluid flow). It is my opinion that Gao's baffle would have a similar effect.

It is thus my opinion that Gao teaches a silencer assembly including a baffle, and thus, the above-described inlet and outlet also respectively meet the "silencer inlet" and "silencer outlet" limitations.

347. A POSITA would further understand that Gao's cover body 1, baffle 3, inlet upstream of baffle 3, and outlet downstream of baffle 3, correspond to a silencer assembly having a silencer inlet, a silencer outlet, and a baffle.

348. It is thus my opinion that Gao discloses a silencer assembly (*e.g.*, cover body 1, baffle 3, inlet upstream of baffle 3, and outlet downstream of baffle 3).

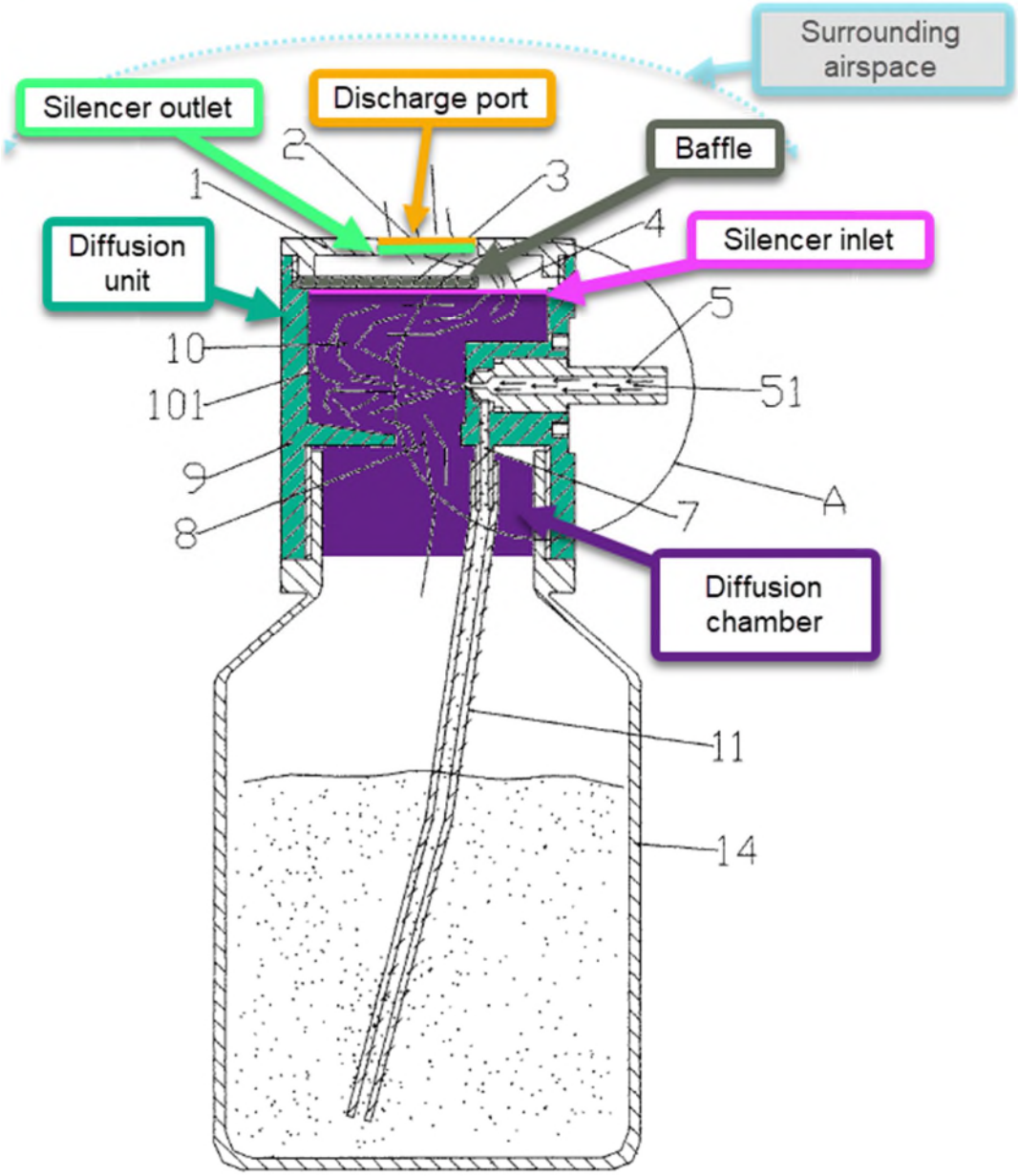

图 1

EX1013, FIG. 1

349. Indeed, Gao discloses that baffle 3 regulates the flow of atomized particles out of atomizing gas outlet 2. A POSITA would also understand that a baffle that restrains fluid flow by sudden cross-sectional changes results in acoustical impedance discontinuities that limit sound associated therewith. Further, a POSITA

would understand that flow obstructions that cause flow restrictions reduce turbulence and flow generated noise.

350. Thus, it is my opinion that Gao teaches a silencer assembly having a silencer inlet (*e.g.*, the inlet upstream of baffle 3), a silencer outlet (*e.g.*, the outlet downstream of baffle 3), and a baffle (*e.g.*, baffle 3).

> **7[F] wherein said baffle partially restricts movement of the fluid dispersion through said silencer chamber from said silencer inlet to said silencer outlet, thereby dampening sound waves generated during operation of said fluid dispersion assembly.**

351. Gao discloses or renders obvious a baffle that partially restricts movement of the fluid dispersion through said silencer chamber from said silencer inlet to said silencer outlet, thereby dampening sound waves generated during operation of said fluid dispersion assembly.

352. It is my understanding that Patent Owner has contended that the term "silencer chamber" contains "a clerical error" and should be construed to mean "silencer assembly." *See* EX1018, page 1.

353. Further, it is my understanding that Patent Owner and Petitioner have stipulated that the term "fluid dispersion" means a "mixture of operative fluid in air comprising a plurality of substantially uniform droplets (having substantially the same diameter) of the operative fluid dispersed throughout the air." *See* EX1018, Exhibit A. The '094 Patent recites the plurality of substantially uniform droplets

each have a diameter in the range of one about micron (1 μm), about three microns (3 μm), or about five microns (5 μm). EX1001, 3:15-21.

354. Gao teaches "[t]he smallest particles will float in the air, and drift out through the through hole 4 and the atomizing gas outlet 2 with the rising gas flow to be converted into gas through heat exchange with the air. The smaller the particles, the easier it is to convert into gas. Other larger particles are recovered in the lower part cavity 10 and refluxed into the bottle as essence and essential oil through the reflux hole 8." EX1013, ¶ [0025].

355. Thus, Gao teaches providing a fluid dispersion that is comprised of small and substantially uniform droplets. In particular, Gao teaches that only the smallest particles will float in the air and out of the outlet. Gao recognizes the importance of only allowing small particles to exit because those are the particles that will be most readily converted into gas, which is necessary to disperse essential oil odors.

356. Gao teaches that the particles in fluid dispersion assemblies produced by the heating method are large and not uniform, and thus easily adhere to pipes and other objects. "The particles produced by the heating method are large and not uniform, and they are very easy to adhere to the air conditioning pipes and other objects." EX1013, ¶ [0004].

357. Thus, an object of Gao is to provide a fluid dispersion assembly (*e.g.*, an atomizer) for atomizing essence or essential oil that uses a cold atomization mode and does not require heating to effectively maintain the natural aroma of essence and essential oil. EX1013, ¶ [0007] "[I]n addition, the atomized particles are finer and more uniform, the aroma is more uniform, and the aroma diffusion area is large." *Id.*

358. Gao's fluid dispersion assembly provides particles that "are finer and more uniform[,] easier to vaporize after contact with the air[,] and [provide an] aroma [that] is more uniform." EX1013, ¶ [0013]. Gao teaches that the "finer the atomized particles, the more uniform the smell. When the atomized particles are ultra-fine mist, they will not adhere to the pipes and filters." EX1013, ¶ [0015].

359. It is thus my opinion that a POSITA would understand Gao to teach providing a fluid dispersion with substantially uniform droplets, *i.e.*, droplets with a substantially uniform diameter.

360. For the reasons discussed above, it is my opinion that a POSITA would understand Gao to disclose that baffle 3 partially restricts movement of the fluid dispersion through said silencer chamber (*e.g.*, the chamber defined by main body 9 and cover body 1 located between the silencer inlet and the silencer outlet) that regulates the flow of particles out of atomizing gas outlet 2. A POSITA would appreciate that baffle 3, which regulates fluid flow, would reduce noise through

acoustic impedance discontinuities caused by sudden cross-sectional changes and flow restriction that reduces turbulence and flow generated noise.

361. Further, as noted above, under Patent Owner's proposed construction, the claims do not include a "silencer chamber" limitation. Gao teaches this limitation under Patent Owner's proposed broader construction for the same reasons set forth above.

> **Claim 8. The fluid dispersion assembly as recited in claim 7 wherein said atomizer assembly comprising an atomizer air inlet channel, a fluid inlet, a mixing chamber, and an atomizer exhaust channel.**

362. Gao discloses or renders obvious the fluid dispersion assembly as recited in claim 7 wherein said atomizer assembly comprising an atomizer air inlet channel, a fluid inlet, a mixing chamber, and an atomizer exhaust channel.

363. As explained above, Gao's "gas flow nozzle 5 is fixed in the second cavity 13. A gap is provided between the gas flow nozzle 5 and the bottom wall of the second cavity 13. An atomizing cavity 6 is formed between the gas flow nozzle 5 and the bottom wall of the second cavity. A liquid pipeline 7 is further provided on the atomizer body, and the liquid pipeline 7 is in communication with the atomizing cavity 6." EX1013, ¶ [0019].

364. Further, Gao's "gas inlet on [the] side of the atomizer, i.e., the inlet of the gas flow pipe 51, is connected to the air pump. When the air pump is in operation, a gas flow is blown out through the pipe. The liquid is sucked into the atomizing

cavity 6 based on the siphon principle, and the liquid and the gas are fully mixed. The high-speed gas-liquid mixture is then ejected through [gas flow spray hole 12]." EX1013, ¶ [0025].

365. Thus, it is my opinion that a POSITA would understand Gao's gas flow pipe 51 and/or the narrowed portion of gas flow pipe 51, i.e., inlet of the gas flow pipe 51, to correspond to an atomizer air inlet channel.

366. A POSITA would further understand Gao's liquid pipeline 7 to correspond to a fluid inlet. A POSITA would also understand Gao's atomization cavity 6 to correspond to a mixing chamber.

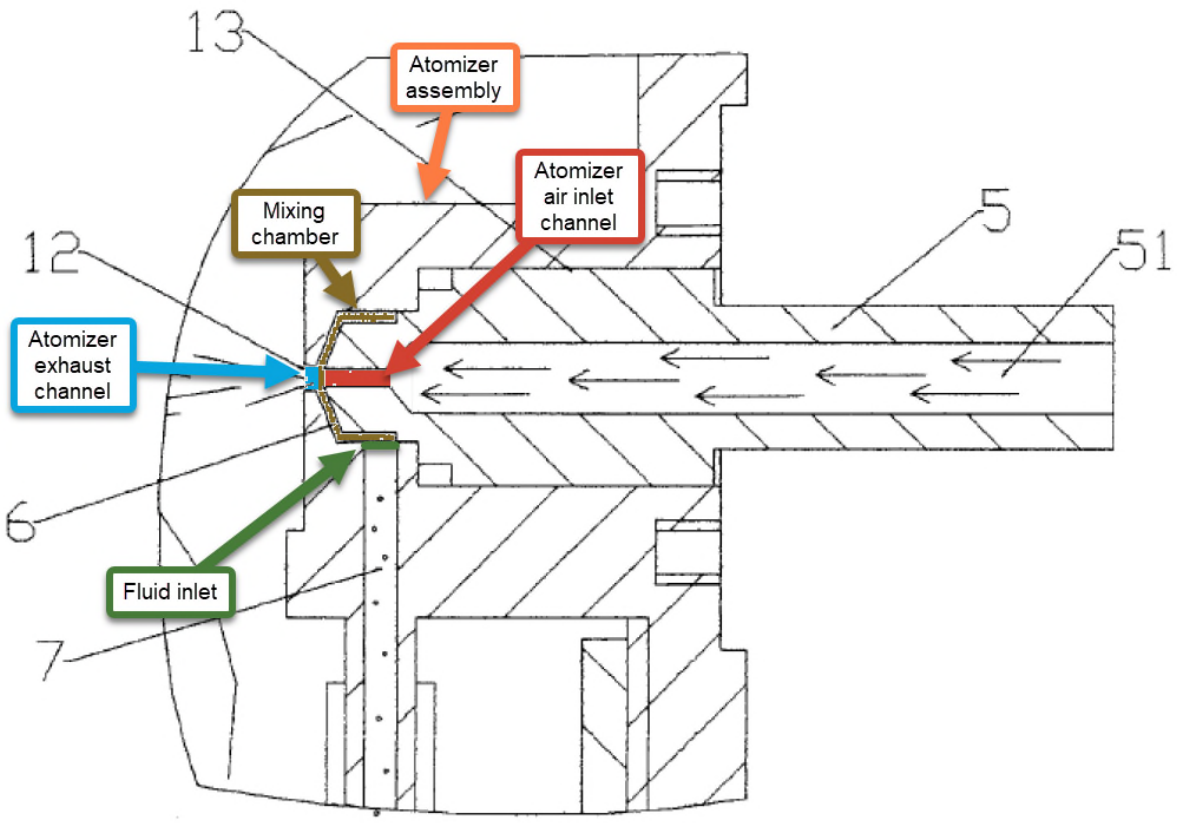

FIG. 2

EX1013, FIG. 2

367. Thus, it is my opinion that a POSITA would understand Gao to teach a fluid dispersion assembly as recited in claim 7 wherein the atomizer assembly comprises an atomizer air inlet channel, a fluid inlet, a mixing chamber, and an atomizer exhaust channel.

> **Claim 9[A] The fluid dispersion assembly as recited in claim 8 wherein said atomizer air inlet channel is interconnected to the compressed air source and said fluid inlet disposed in fluid communication with the operative fluid in the container,**

368. Gao discloses or renders obvious the fluid dispersion assembly as recited in claim 8 wherein said atomizer air inlet channel is interconnected to the

compressed air source and said fluid inlet disposed in fluid communication with the operative fluid in the container.

369. Gao explains that "the gas inlet on a side of the atomizer, i.e., the inlet of the gas flow pipe 51, is connected to the air pump. When the air pump is in operation, a gas flow is blown out through the pipe." EX1013, ¶ [0025].

370. Thus, it is my opinion that a POSITA would understand Gao's fluid dispersion assembly (*e.g.*, atomizer) to include an atomizer air inlet channel (*e.g.*, gas flow pipe 51 and/or the narrowed portion of gas flow pipe 51) that is interconnected to the compressed air source (*e.g.*, air pump).

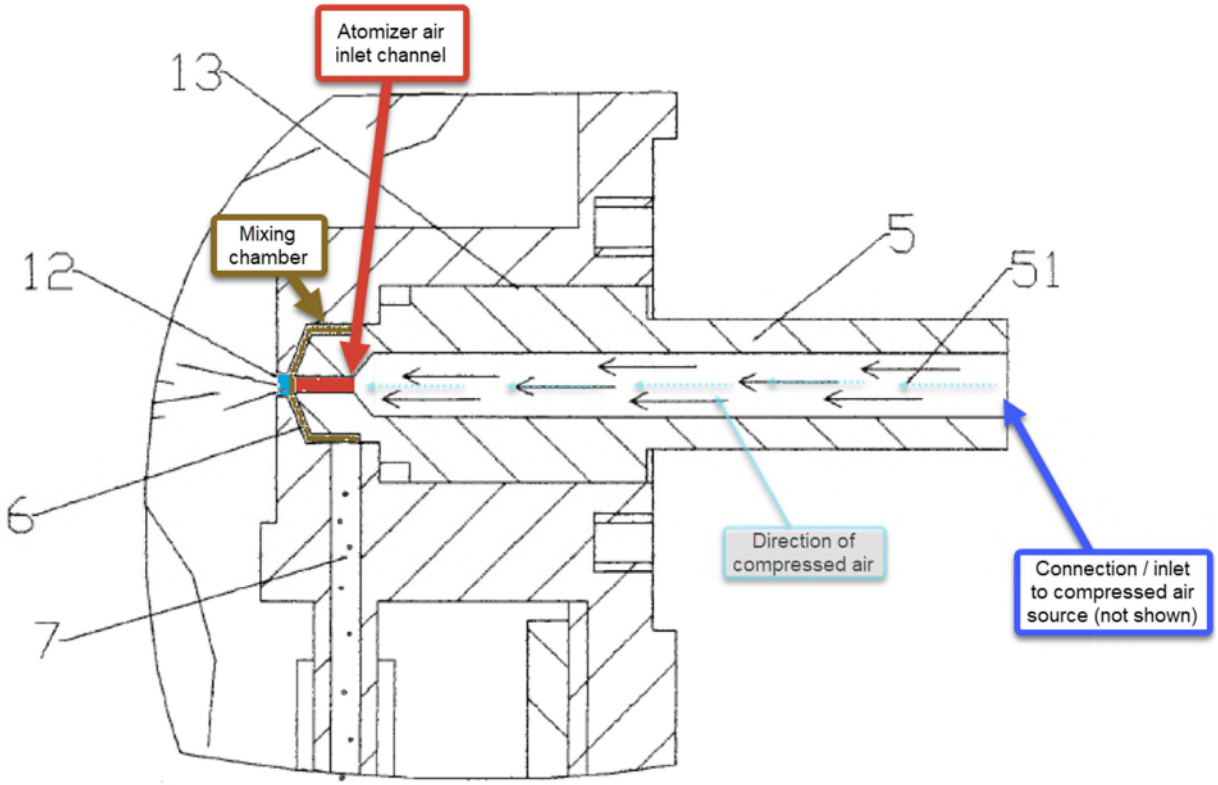

FIG. 2

EX1013, FIG. 2

9[B] wherein the compressed air and the operative fluid are mixed together in said mixing chamber to form the fluid dispersion.

371. Gao discloses or renders obvious the compressed air and the operative fluid are mixed together in said mixing chamber to form the fluid dispersion.

372. Gao teaches that a "liquid pipeline 7 is further provided on the atomizer body, and the liquid pipeline 7 is in communication with the atomizing cavity 6." EX1013, ¶ [0019]. "The liquid is sucked into the atomizing cavity 6 based on the siphon principle." EX1013, ¶ [0025]. *See also* annotated figures 1 and 2 illustrating the liquid pipeline in fluid communication with the operative fluid via hose 11.

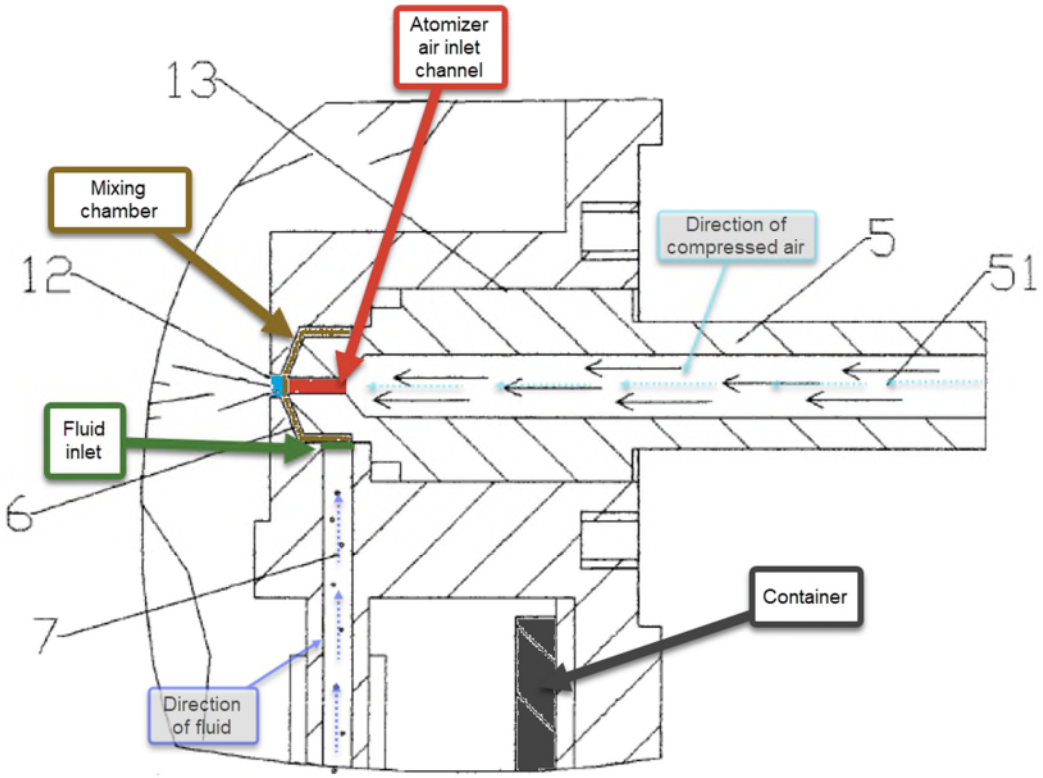

FIG. 2

EX1013, FIG. 2

373. It is thus my opinion that a POSITA would understand Gao's fluid inlet is disposed in fluid communication with the operative fluid in the container.

374. Gao's "atomizing cavity 6 is formed between the gas flow nozzle 5 and the bottom wall of the second cavity," and a "liquid pipeline 7 is further provided on the atomizer body" such that "the liquid pipeline 7 is in communication with the atomizing cavity 6." EX1013, ¶ [0019].

375. Gao further teaches that "the inlet of the gas flow pipe 51[] is connected to the air pump" so that "[w]hen the air pump is in operation, a gas flow is blown out through the pipe. The liquid is sucked into the atomizing cavity 6 based on the siphon principle, and the liquid and the gas are fully mixed." EX1013, ¶ [0025].

376. It is thus my opinion that a POSITA would understand Gao to teach that where the compressed air and the operative fluid drawn in through liquid pipeline 7 (*e.g.*, the fluid inlet) and mixed together, they are mixed in a mixing chamber (*e.g.*, atomizing cavity 6). A POSITA would further understand that for the liquid and gas to be "fully mixed," they are mixed to form a fluid dispersion.

> **Claim 11. The fluid dispersion assembly as recited in claim 7 wherein said diffusion chamber facilitates formation of the fluid dispersion prior to discharge of the fluid dispersion from said diffusion chamber through said discharge port and into the surrounding airspace.**

377. Gao discloses or renders obvious the fluid dispersion assembly as recited in claim 7 wherein said diffusion chamber facilitates formation of the fluid

dispersion prior to discharge of the fluid dispersion from said diffusion chamber through said discharge port and into the surrounding airspace.

378. Gao's "main body 9 is provided with an upper cavity and a lower cavity." EX1013, ¶ [0020]. "The high-speed gas-liquid mixture is … ejected through a gas flow flow (sic) port and hits an inner wall 101 of the lower part cavity 10, thus the liquid is atomized into micron-sized fine particles." EX1013, ¶ [0025] of Gao. "The smallest particles will float in the air, and drift out through the through hole 4 and the atomizing gas outlet 2." EX1013, ¶ [0025].

379. It is thus my opinion that a POSITA would understand that Gao's diffusion chamber (*e.g.*, lower part cavity 10 within main body 9, also referred to as the portion between "[t]he baffle and the bottom wall of the first cavity [that] form a lower part cavity 10 and the surrounding airspace") facilitates formation of the fluid dispersion (*e.g.* atomized micron-sized fine particles, which, as described above, are small and substantially uniform) prior to discharge of the fluid dispersion from the diffusion chamber through the discharge port (*e.g.*, through gas outlet 2) and into the surrounding airspace.

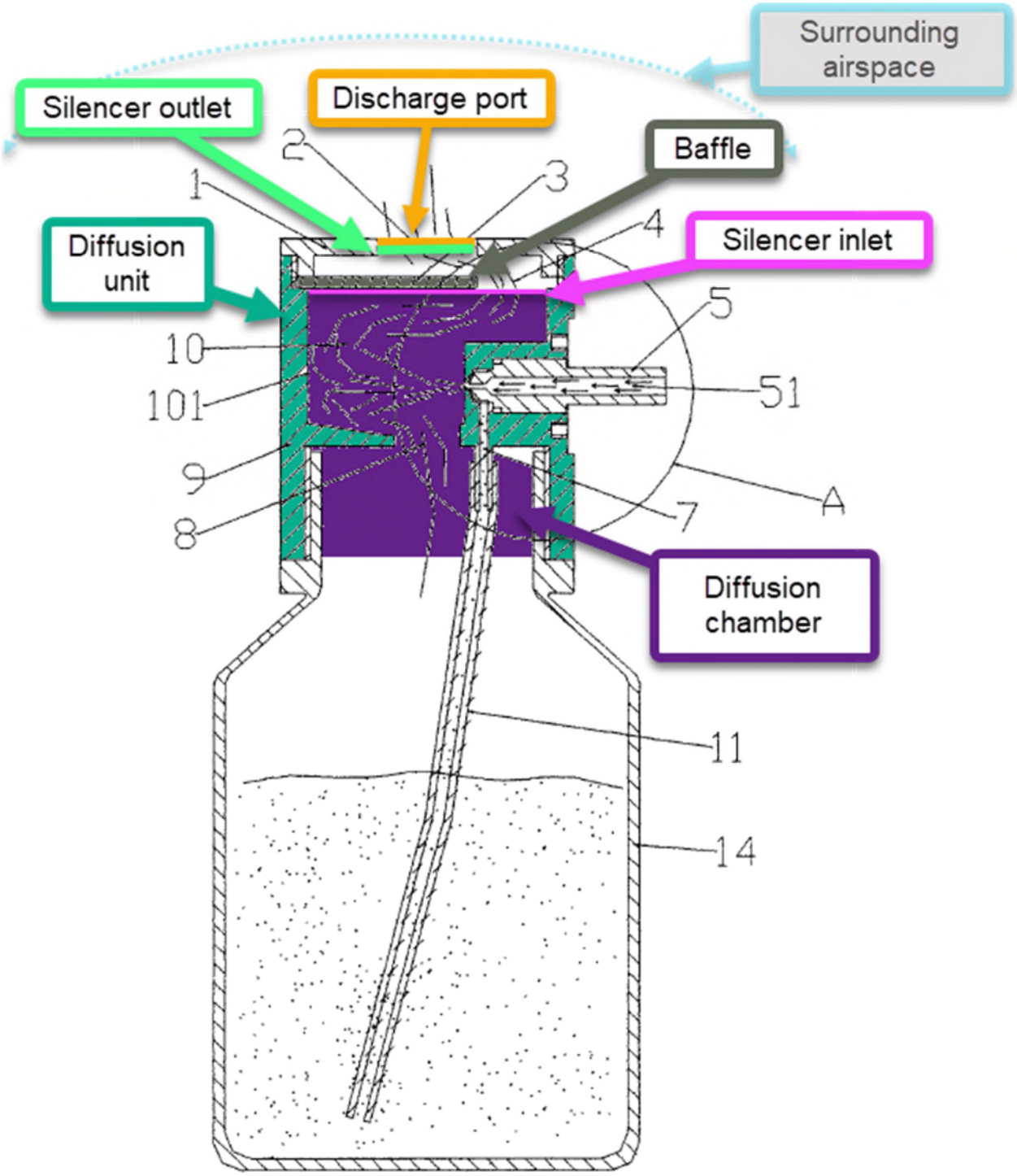

图 1

EX1013, FIG. 1

F. GROUND 6: Claims 7-9 and 11 are rendered obvious under 35 U.S.C. § 103 by Gao in view of Zeng

380. As discussed above for Ground 5, it is my opinion that Gao alone renders obvious claims 7-9 and 11. As part of that analysis, I noted that Gao discloses an assembly including a baffle (*e.g.*, baffle 3) that disrupts and restricts the flow of atomized droplets. As I explained above, such a baffle dampens sound waves and meets the "silencer assembly" limitations. As I further explained above, Gao at least suggests that its baffle has a dampening effect on sound waves and meets the limitations of a "silencer assembly." Nevertheless, because Gao does not explicitly recite that baffle 3 has a sound dampening effect, I address, in Ground 6 for limitations 7[E] and 7[F], why claims 7-9 and 11 would have been obvious over Gao in view of Zeng, which explicitly discloses a noise reduction head 20 for this purpose. EX1011, pgs. 4-7.

381. In other words, to the extent Gao is found not to disclose a baffle that partially restricts movement of the fluid dispersion through said silencer chamber from said silencer inlet to said silencer outlet, thereby dampening sound waves generated during operation of said fluid dispersion assembly, it would have been obvious to a POSITA to combine Zeng with Gao in view of their teachings and the existing state of the art at the time of the invention.

7[E] a silencer assembly having a silencer inlet, a silencer outlet, and a baffle,

7[F] wherein said baffle partially restricts movement of the fluid dispersion through said silencer chamber from said silencer inlet to said silencer outlet, thereby dampening sound waves generated during operation of said fluid dispersion assembly.

382. A POSITA would have been motivated to combine Zeng with Gao because both references are in the same field of endeavor and seek to solve the same problem of providing fluid dispersion assemblies powered by a compressed air source and that provide improved atomization by reducing the size/volume of the atomized droplets.

383. Zeng recognizes drawbacks of conventional atomizers, including their production of: (1) large droplets of varying sizes; and (2) an irritating "hissing" or "whistling" noise during operation. EX1011, at pgs. 4-5. To address these drawbacks, Zeng proposes a noise reduction head 20 and inner cover 30 that cooperate to form a silencer assembly designed to dampen sound and only permit small and uniform molecules (*e.g.*, fluid dispersion) to pass through the opening 31 of inner cover 30 (*e.g.*, the silencer assembly).

384. A POSITA would have been motivated to combine the teachings of Zeng with Gao to dampen the hissing noise, while maintaining the small and uniform droplets taught by Gao to enhance user experience.

385. Combining Zeng with Gao could have been achieved without undue experimentation. First, a POSITA would appreciate that Gao's baffle restricts fluid flow and produces "more uniform" droplets that "can be controlled below 3 microns" to produce a more "uniform smell." EX1013, ¶¶ [0007], [0025]. Second, Zeng's silencer assembly (*e.g.*, the noise reduction head 20 and the inner cover 30) serves the same purpose as Gao's baffle, namely, preventing large molecules of differing sizes from passing therethrough, *and* additionally, has a sound dampening effect. Thus, to reduce noise without sacrificing atomization quality (*i.e.*, without undermining uniformity of droplet size), a POSITA would have been motivated to modify Gao in at least two ways.

Modification 1

386. First, a POSITA would have been motivated to substitute Gao's baffle 3 and cover body 1 with Zeng's silencer 20 and inner cover 30, which would reduce the hissing sound generated during operation of the fluid dispersion assembly as the fluid dispersion flows therethrough without enlarging droplet size. The combination of Zeng's silencer 20 and inner cover 30 would replace Gao's baffle 3 and cover body 1 and sit on the ledge formed within Gao's main body 9. As such, Zeng's silencer assembly would be a simple substitution of known parts for Gao's silencer assembly that would not require undue experimentation. Furthermore, such modification would achieve the same desired technical effect.

Modification 2

387. Second, a POSITA would have alternatively been motivated to modify Gao's existing orifice baffle into a dome shape orifice baffle as taught by Zeng to produce an improved noise reducing effect. Such a modification would be small change in structure that would not require undue experimentation or modification of other components within of the atomizer.

388. I note that during prosecution of the '364 Application, which matured into the '215 Patent to which the '094 Patent is a continuation, the Examiner explicitly argued that the suppression chamber of Dorendorf is equivalent to the claimed "silencer assembly." EX1005, pgs. 65-67. In this regard, I believe the Patent Office has recognized that a suppression chamber, like that disclosed in Dorendorf, and, in turn, in Zeng, meets the silencer assembly limitations 7[E] and 7[F].

389. For the foregoing reasons, it is my opinion that the resultant combination of Zeng and Gao would also meet the limitations of 7[E] and 7[F].

Other Limitations of Claim 7

390. Limitations 7[PRE]–7[D] are taught by Gao for the reasons previously provided in Ground 5 as such limitations are wholly unrelated to the silencer assembly.

Claims 8, 9, and 11

391. Claims 8, 9, and 11 are taught by Gao for the reasons previously provided in Ground 5 as such limitations are also wholly unrelated to the silencer assembly.

VIII. OATH

I declare that all statements made herein of my own knowledge are true and that all statements made on information and belief are believed to be true; and further that these statements were made with the knowledge that willful false statements and the like so made are punishable by fine or imprisonment, or both, under Section 1001 of Title 18 of the United States Code.

Dated: 3/18/2025 By: Christopher White