SOURCE IP

Your global source
for foreign filing services

Certification of Accuracy

I, Qiang Li, hereby attest that I am a translator fluent in Chinese and English, that I have translated the attached document from Chinese to English, and that to the best of my knowledge, ability and belief this translation is a true, accurate and complete translation of the original Chinese document that was provided to me.

The document is designated as:

CN204072864U-c

_____
Signature of Translator

March 12, 2025
_____
Date

(19) The National Intellectual Property Administration of the People's Republic of China

(12) Utility Model Patent

(10) Patent No.: CN 204072864 U

(45) Patent Date: Jan 7, 2015

(21) Appl. No.: 201420440948.4

(22) Filed on: August 6, 2014

(73) Patent Holder: GAO Xiaoyang
Address: Room 601, Block 2, Haitao Pavilion, Shunde Country Garden, Beirong Town, Shunde District, Foshan City, Guangdong Province 528312

(72) Inventor(s): GAO Xiaoyang

(74) Patent Firm or Agency: Guangzhou Sanhuan Patent Agency Co., Ltd. 44202
Agents: WANG Jicai, WANG Donghua

(51) Int. Cl.
A61L 9/14 (2006. 01)

Claims 1 page, Description 5 pages, Drawings 10 pages

(54) Title of Utility model

AROMA DIFFUSER

(57) Abstract of Disclosures

The present utility model relates to an aroma diffuser, which includes an atomization device and an air pump. The atomization device can be connected to an essential oil bottle. The atomization device includes an atomization device body, an atomization core, and a liquid suction tube. The atomization core is disposed in the atomization device body and connected to the liquid suction tube. The atomization device body is connected to the air pump. The atomization device body is provided with a first connection portion for connecting to the essential oil bottle. The atomization core is located in the first connection portion. When the first

connection portion is connected to the essential oil bottle, the atomization core and the liquid suction tube extend into the essential oil bottle. The atomization core mixes airflow with an essential oil to form a fragrant mist. The atomization device body is also provided with a channel for discharging the fragrant mist. In the aroma diffuser provided by the present utility model, by means of arranging the atomization core in the first connection portion, when the first connection portion is connected to the essential oil bottle, the atomization core extends into the essential oil bottle, and the essential oil bottle simultaneously serves as an atomization chamber, thereby avoiding the need for a separate atomization chamber and making the structure of the aroma diffuser more compact.

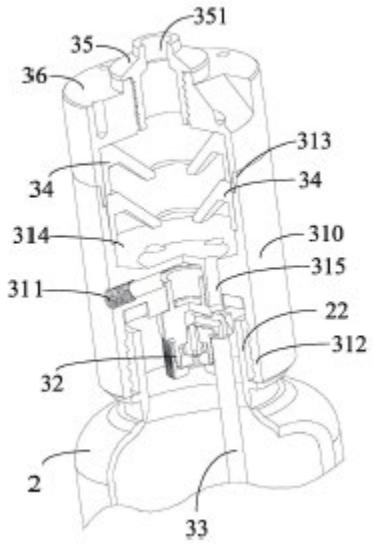

CN 204072864 U

1. An aroma diffuser, characterized in that the aroma diffuser comprises an atomization device and an air pump, the atomization device is connectable to an essential oil bottle, the atomization device comprises an atomization device body, an atomization core, and a liquid suction tube, the atomization core is disposed in the atomization device body and connected to the liquid suction tube, the atomization device body is connected to the air pump, the atomization device body is provided with a first connection portion for connecting to the essential oil bottle, the atomization core is located in the first connection portion, when the first connection portion is connected to the essential oil bottle, the atomization core and the liquid suction tube extend into the essential oil bottle, the air pump is configured to provide airflow to the atomization core, under an action of the airflow, the atomization core can draw in an essential oil through the liquid suction tube and mix the airflow with the essential oil for atomization, thereby forming a fragrant mist, and the atomization device body is further provided with a channel for discharging the fragrant mist.

2. The aroma diffuser according to claim 1, characterized in that the first connection portion is located at a lower part of the atomization device body, and when the first connection portion is connected to the essential oil bottle, the essential oil bottle is positioned below the atomization device body, and a downward-facing spray outlet is formed in the atomization core.

3. The aroma diffuser according to claim 1, characterized in that the atomization device body comprises a cylindrical body and a partition plate, an upper end and a lower end of the cylindrical body are open, the partition plate is disposed in the cylindrical body and divides the cylindrical body, a lower chamber and the first connection portion are formed below the partition plate, the first connection portion surrounds the lower chamber, the atomization core is connected to the partition plate and is located in the lower chamber, the cylindrical body is provided with an air inlet channel connecting the air pump to the atomization core, the partition plate is further provided with a mist passage hole penetrating the partition plate, and the mist passage hole communicates with the lower chamber.

4. The aroma diffuser according to claim 3, characterized in that a noise reduction device is disposed above the partition plate, the noise reduction device is in communication with the

mist passage hole, and the fragrant mist can pass through the noise reduction device and be discharged.

5. The aroma diffuser according to claim 4, characterized in that the atomization device further comprises an atomization head cover, the cylindrical body is formed with a second connection portion located above the partition plate, the second connection portion is configured to connect the atomization head cover, and the noise reduction device is disposed in the second connection portion and/or the atomization head cover.

6. The aroma diffuser according to claim 5, characterized in that the atomization device further comprises a small noise reduction cover, the small noise reduction cover is disposed on the atomization head cover, the small noise reduction cover is provided with a mist outlet, and the mist outlet is in communication with the mist passage hole via the noise reduction device.

7. The aroma diffuser according to any one of claims 1 to 6, characterized in that the atomization core comprises an atomization core base, an atomization rotating core, an atomization core cap, and a liquid suction tube connector, the atomization rotating core is disposed within the atomization core base, the atomization core cap is located outside the atomization rotating core and cooperates with the atomization core base to confine the atomization rotating core within the atomization core base, the liquid suction tube connector connects the atomization core base and the liquid suction tube, the atomization rotating core has a liquid suction hole, the atomization core cap is provided with the spray outlet opposing an outlet of the liquid suction hole, the atomization core base has an airflow channel and a liquid suction channel, the airflow channel is in communication with the air pump and the spray outlet to direct the airflow from the air pump to the spray outlet, and the liquid suction channel connects the liquid suction tube connector and the liquid suction hole.

8. The aroma diffuser according to claim 7, characterized in that the atomization rotating core is formed with a plurality of guide grooves surrounding the outlet of the liquid suction hole, a projection of an extension direction of the guide grooves in a radial plane of the liquid suction hole forms an angle with a radial direction of the outlet of the liquid suction hole.

9. The aroma diffuser according to claim 7, characterized in that the atomization core base runs through from top to bottom and provided with a mounting plate therein, the atomization rotating core is confined between the mounting plate and the atomization core cap, and the mounting plate is provided with a vent hole that penetrates the mounting plate in a vertical direction.

10. The aroma diffuser according to claim 7, characterized in that the liquid suction tube connector is rotatable relative to the atomization core base.

AROMA DIFFUSER

Technical Field

[0001] The present utility model relates to the field of air improvement devices, specifically to an aroma diffuser.

Background Art

[0002] With the continuous improvement of people's living standards, the number of activities people participate in has also increased. However, in many activity venues, such as hotels, if the air is not fresh, it can easily cause people to feel tired, irritable, and other unpleasant emotions. To create a better environment, the commonly used methods are using solid fragrances or spraying perfume in the room to improve the air quality indoors, thereby keeping the air fresh, eliminating odors, and providing sterilization and disinfection. However, with the former, the fragrance of solid fragrances cannot be fully released, often resulting in some waste. The latter is more troublesome to use, and since the perfume particles sprayed are relatively large and have a very limited range of dispersion, the efficiency of this method is also very low.

[0003] A fragrance diffusion device (aroma diffuser) can be used to atomize essential oils, allowing the fragrance/aroma to spread into the air to improve air quality. Related technology discloses an aroma diffuser that uses the siphon principle to draw essential oil from an essential oil bottle, atomizes the essential oil through an atomization device, and then diffuses it into the air. This aroma diffuser can achieve a good atomization effect for essential oils, but because it requires a separate atomization chamber, the overall size of the aroma diffuser is relatively large, which is not conducive to the miniaturization and cost reduction of the aroma diffuser.

Summary of the Utility model

[0004] In view of the foregoing, the present utility model aims to provide an aroma diffuser with a compact structure and smaller size.

[0005] To achieve the purpose of the present utility model, the present utility model provides an aroma diffuser, which comprises an atomization device and an air pump, the atomization device is connectable to an essential oil bottle, the atomization device comprises an atomization device body, an atomization core, and a liquid suction tube, the atomization core is disposed in the

atomization device body and connected to the liquid suction tube, the atomization device body is connected to the air pump, the atomization device body is provided with a first connection portion for connecting to the essential oil bottle, the atomization core is located in the first connection portion, when the first connection portion is connected to the essential oil bottle, the atomization core and the liquid suction tube extend into the essential oil bottle, the air pump is configured to provide airflow to the atomization core, under an action of the airflow, the atomization core can draw in an essential oil through the liquid suction tube and mix the airflow with the essential oil for atomization, thereby forming a fragrant mist, and the atomization device body is further provided with a channel for discharging the fragrant mist.

[0006] Preferably, the first connection portion is located at a lower part of the atomization device body, and when the first connection portion is connected to the essential oil bottle, the essential oil bottle is positioned below the atomization device body, and a downward-facing spray outlet is formed in the atomization core.

[0007] Preferably, the atomization device body comprises a cylindrical body and a partition plate, an upper end and a lower end of the cylindrical body are open, the partition plate is disposed in the cylindrical body and divides the cylindrical body, a lower chamber and the first connection portion are formed below the partition plate, the first connection portion surrounds the lower chamber, the atomization core is connected to the partition plate and is located in the lower chamber, the cylindrical body is provided with an air inlet channel connecting the air pump to the atomization core, the partition plate is further provided with a mist passage hole penetrating the partition plate, and the mist passage hole communicates with the lower chamber.

[0008] Preferably, a noise reduction device is disposed above the partition plate, the noise reduction device is in communication with the mist passage hole, and the fragrant mist can pass through the noise reduction device and be discharged.

[0009] Preferably, the atomization device further comprises an atomization head cover, the cylindrical body is formed with a second connection portion located above the partition plate, the second connection portion is configured to connect the atomization head cover, and the noise reduction device is disposed in the second connection portion and/or the atomization head cover.

[0010] Preferably, the atomization device further comprises a small noise reduction cover, the small noise reduction cover is disposed on the atomization head cover, the small noise reduction

cover is provided with a mist outlet, and the mist outlet is in communication with the mist passage hole via the noise reduction device.

[0011] Preferably, the atomization core comprises an atomization core base, an atomization rotating core, an atomization core cap, and a liquid suction tube connector, the atomization rotating core is disposed within the atomization core base, the atomization core cap is located outside the atomization rotating core and cooperates with the atomization core base to confine the atomization rotating core within the atomization core base, the liquid suction tube connector connects the atomization core base and the liquid suction tube, the atomization rotating core has a liquid suction hole, the atomization core cap is provided with the spray outlet opposing an outlet of the liquid suction hole, the atomization core base has an airflow channel and a liquid suction channel, the airflow channel is in communication with the air pump and the spray outlet to direct the airflow from the air pump to the spray outlet, and the liquid suction channel connects the liquid suction tube connector and the liquid suction hole.

[0012] Preferably, the atomization rotating core is formed with a plurality of guide grooves surrounding the outlet of the liquid suction hole, a projection of an extension direction of the guide grooves in a radial plane of the liquid suction hole forms an angle with a radial direction of the outlet of the liquid suction hole.

[0013] Preferably, the atomization core base runs through from top to bottom and provided with a mounting plate therein, the atomization rotating core is confined between the mounting plate and the atomization core cap, and the mounting plate is provided with a vent hole that penetrates the mounting plate in a vertical direction.

[0014] Preferably, the liquid suction tube connector is rotatable relative to the atomization core base.

[0015] The aroma diffuser provided by the present utility model, by arranging the atomization core in the first connection portion, allows the atomization core to extend into the essential oil bottle when the first connection portion is connected to the essential oil bottle. The essential oil bottle simultaneously serves as an atomization chamber, thus avoiding the need to separately provide an atomization chamber, making the structure of the aroma diffusion device more compact.

Brief Description of the Drawings

[0016] FIG. 1 is a perspective view of an aroma diffuser provided by an embodiment of the present utility model.

[0017] FIG. 2 is a partial cross-sectional view of an aroma diffuser provided by an embodiment of the present utility model.

[0018] FIG. 3 is a partial exploded view of an aroma diffuser provided by an embodiment of the present utility model.

[0019] FIG. 4 is a cross-sectional view of an atomization device and an essential oil bottle of an aroma diffuser provided by an embodiment of the present utility model.

[0020] FIG. 5 is a partial enlarged view of FIG. 4.

[0021] FIG. 6 is an exploded view of an atomization core and a liquid suction tube of the atomization device shown in FIG. 4.

[0022] FIG. 7 is an exploded cross-sectional view of the atomization core and liquid suction tube shown in FIG. 6.

[0023] FIG. 8 is an exploded view of the atomization core shown in FIG. 6 from another perspective.

[0024] FIG. 9 is a structural schematic diagram of the atomization rotating core of the atomization core shown in FIG. 8.

[0025] FIG. 10 is an assembled cross-sectional view of the atomization core and liquid suction tube shown in FIG. 6.

Description of the Embodiments

[0026] In order to make the purposes, technical solutions, and advantages of the present utility model clearer and more understandable, the present utility model is further described in detail below in conjunction with the accompanying drawings and embodiments. It should be understood that the specific embodiments described herein are only used to explain the present utility model and are not intended to limit the present utility model.

[0027] With reference to FIG. 1 to FIG. 10, an embodiment of the present utility model provides an aroma diffuser, which includes an atomization device 3 and an air pump 4. Specifically, the aroma diffuser further includes a housing 1, and the housing 1 is divided by a baffle plate into a first installation chamber 6 and a second installation chamber 7. The atomization device 3 is installed in the first installation chamber 6, and the air pump 4 is installed in the second

installation chamber 7 and connected to the atomization device 3 through a pipeline. The atomization device 3 can be connected to an essential oil bottle 2, used to atomize an essential oil in the essential oil bottle 2, so as to form a fragrant mist, and discharge the fragrant mist outside the aroma diffuser, thereby creating an aroma in the air. A fan 5 is also provided in the first installation chamber 6 to make the fragrant mist disperse farther and to make the fragrance in the air more uniform. Specifically, a fan box 37 is provided on the atomization device 3, and the fan 5 is installed inside the fan box 37.

[0028] With reference to FIG. 2 to FIG. 5, the atomization device 3 includes an atomization device body 31, an atomization core 32, and a liquid suction tube 33. The atomization device body 31 is roughly cylindrical in shape, and the atomization core 32 is disposed within the atomization device body 31 and connected to the liquid suction tube 33. The atomization device body 31 is connected to the air pump 4 by a pipeline. The atomization device body 31 is provided with a first connection portion 312 for connecting to the essential oil bottle 2. The atomization core 32 is located within the first connection portion 312. When the first connection portion 312 is connected to the essential oil bottle 2, the atomization core 32 and the liquid suction tube 33 extend into the essential oil bottle 2. Specifically, an inner wall of the first connection portion 312 is formed with threads, and an outer wall of the bottle mouth 22 of the essential oil bottle 2 is also formed with threads, thereby allowing the first connection portion 312 to be threadedly connected to a bottle mouth 22 of the essential oil bottle 2. After connection, the atomization core 32 extends into the bottle mouth 22 and is spaced a certain distance from an inner wall of the bottle mouth 22, while a lower end of the liquid suction tube 33 extends to the bottom of the essential oil bottle 2, to draw the essential oil from the essential oil bottle 2 into the atomization core 32.

[0029] The air pump 4 is used to provide airflow to the atomization core 32. The atomization core 32 forms negative pressure under the action of the airflow, utilizing the siphon principle to draw the essential oil from the essential oil bottle 2 through the liquid suction tube 33, and then mixes and atomizes the airflow with the essential oil to form a fragrant mist. The atomization device 3 is also provided with a channel for discharging the fragrant mist, thereby ejecting the fragrant mist outside the aroma diffuser.

[0030] In a preferred embodiment, the first connection portion 312 is located at the lower part of the atomization device body 31. When the first connection portion 312 is connected to the bottle

mouth 22 of the essential oil bottle 2, the essential oil bottle 2 is positioned below the atomization device body 31. A downward-facing spray outlet 3231 is formed in the atomization core 32. Since the atomization core 32 is located within the bottle mouth 22 and the spray outlet 3231 faces downward, the coarse fragrant mist (i.e., droplets) sprayed from the spray outlet 3231 falls directly back into the essential oil bottle 2 under gravity, while only the fine fragrant mist disperses outward, thereby preventing oil stains from forming around the aroma diffuser.

[0031] In a preferred embodiment, the atomization device body 31 includes a cylindrical body 310 and a partition plate 314. The cylindrical body 310 is roughly cylindrical in shape, with a circular through-hole extending vertically formed inside. The upper and lower ends of the cylindrical body 310 are both open, and the partition plate 314 is disposed within the cylindrical body 310, dividing the cylindrical body 310. Below the partition plate 314, a lower chamber and the first connection portion 312 are formed, with the first connection portion 312 surrounding the lower chamber. From another perspective, the first connection portion 312 is annular and defines a portion of the lower chamber. The atomization core 32 is fixedly connected to the partition plate 314 and is located within the lower chamber. An air inlet channel 311 is provided on the cylindrical body 310, with one end of the air inlet channel 311 connected to the air pump 4 by a pipeline and the other end thereof connected to the atomization core 32; it is used to direct the airflow generated by the air pump 4 into the atomization core 32. The partition plate 314 is also provided with a mist passage hole(s) 315 that penetrate through the partition plate 314, and the mist passage hole(s) 315 is connected to the lower chamber. In this embodiment, the partition plate 314 is provided with a plurality of mist passage holes 315 evenly distributed along the circumferential direction. The fragrant mist formed by the atomization core 32 is sprayed out from the spray outlet 3231 into the lower chamber and the bottle mouth 22, and then, under the action of air pressure, the mist is discharged upward through the mist passage holes 315.

[0032] In a further preferred embodiment, a noise reduction device 34 is disposed above the partition plate 314, and the noise reduction device 34 is connected to the mist passage holes 315, allowing the fragrant mist to pass through the noise reduction device 34 and be discharged. Specifically, an upper chamber is formed above the partition plate 314, and the mist passage holes 315 are connected to the upper chamber. The noise reduction device 34 is a silencing sheet with a central opening, through which the fragrant mist can pass and be discharged. Noise can be generated when the atomization core 32 atomizes, and this noise is then transmitted through the

mist passage holes 315 to the upper chamber, where it is significantly reduced after passing through the noise reduction device 34. In this embodiment, two stacked noise reduction devices 34 are provided within the atomization device 3. In other embodiments, the number of noise reduction devices 34 can be one, two or more, depending on the noise level generated by the atomization core 32 and the environmental noise requirements for the aroma diffuser.

[0033] With reference to FIG. 5, in a further preferred embodiment, the atomization device 3 also includes an atomization head cover 36, which is roughly shaped like a circular cap. The cylindrical body 310 is formed with a second connection portion 313 located above the partition plate 314, and the second connection portion 313 is connected to the lower end of the atomization head cover 36. The noise reduction device 34 is disposed within the second connection portion 313 and/or the atomization head cover 36. In this embodiment, one noise reduction device 34 is located in the second connection portion 313 (i.e., within the upper chamber), while another noise reduction device 34 is located in the atomization head cover 36. These two noise reduction devices 34 are stacked and confined between the partition plate 314 and the top of the atomization head cover 36. In other embodiments, the noise reduction device 34 may be located only in the second connection portion 313 or may be fixed only in the atomization head cover 36.

[0034] Further preferably, the atomization device 3 also includes a small noise reduction cover 35, and the small noise reduction cover 35 is disposed on the atomization head cover 36. Specifically, the top of the atomization head cover 36 is provided with a threaded hole, and an outer wall of the small noise reduction cover 35 is provided with threads, allowing it to be threadedly connected to the threaded hole of the atomization head cover 36. The small noise reduction cover 35 is provided with a mist outlet 351 that penetrates through the small noise reduction cover 35 in the vertical direction. The mist outlet 351 extends outside the housing 1 of the aroma diffuser and is connected to the mist passage holes 315 through the noise reduction device 34. In this embodiment, the mist outlet 351 is a stepped hole that is smaller at the top and larger at the bottom. After the fragrant mist is discharged from the mist passage holes 315, it first passes through the noise reduction device 34 and then exits through the mist outlet 351 into the air outside the aroma diffuser. The lower chamber, mist passage holes 315, upper chamber, holes in the noise reduction device 34, and mist outlet 351 can all be part of the aforementioned channel for discharging the fragrant mist.

[0035] With reference to FIG. 6 to FIG. 10, in a preferred embodiment, the atomization core 32 includes an atomization core base 321, an atomization rotating core 322, an atomization core cap 323, and a liquid suction tube connector 325. Specifically, the atomization core base 321 includes an atomization core base body 3211. The outer walls of the upper and lower ends of the atomization core base body 3211 are respectively formed with an upper threaded section 3213 and a lower threaded section 3212. The upper threaded section 3213 is threadedly connected to the partition plate 314 in the atomization device body 31, while the lower threaded section 3212 is threadedly connected to an atomization core nut 324. The atomization rotating core 322 is disposed within the atomization core base 321, and the atomization core cap 323 is located outside the atomization rotating core 322, cooperating with the atomization core base 321 to confine the atomization rotating core 322 within the atomization core base 321. Specifically, the atomization core base body 3211 is provided with a receiving hole, and both the atomization rotating core 322 and the atomization core cap 323 are located within the receiving hole. The atomization core nut 324 is positioned outside the atomization core cap 323, pressing the atomization rotating core 322 and the atomization core cap 323 against the atomization core base 321.

[0036] The liquid suction tube connector 325 connects the atomization core base 321 and the liquid suction tube 33. Specifically, the atomization core base body 3211 is provided with a liquid suction channel 3216, and the liquid suction tube connector 325 includes a connector body 3251, as well as a first joint 3252 and a second joint 3253 that are connected to and communicate with the connector body 3251. The first joint 3252 is connected to the upper end of the liquid suction tube 33, and the second joint 3253 is inserted into the liquid suction channel 3216. The atomization rotating core 322 has a liquid suction hole 3224 that penetrates through the atomization rotating core 322 in the vertical direction. The liquid suction channel 3216 connects the second joint 3253 of the liquid suction tube connector 325 to the liquid suction hole 3224, allowing the essential oil to enter the atomization rotating core 322 through the liquid suction tube 33, the liquid suction tube connector 325 and the liquid suction channel 3216. The atomization core cap 323 is provided with a spray outlet 3231 opposing the outlet of the liquid suction hole 3224. The atomization core base 321 has an airflow channel that communicates with the air pump 4 and the spray outlet 3231, thereby directing the airflow from the air pump 4 to the spray outlet 3231. Specifically, the airflow is guided between the atomization rotating core 322

and the atomization core cap 323 and is ejected from the spray outlet 3231. Due to the high-speed ejection of the airflow, a negative pressure is formed near the outlet of the liquid suction hole 3224 opposing the spray outlet 3231, causing the essential oil to be drawn into the liquid suction hole 3224 under this negative pressure. The essential oil then mixes with the airflow and is atomized at the outlet of the liquid suction hole 3224, before being sprayed out from the spray outlet 3231.

[0037] With reference to FIG. 9, in a preferred embodiment, the lower end of the atomization rotating core 322 is formed with a plurality of guide grooves 3225 surrounding the outlet of the liquid suction hole 3224. The projection of the extension direction of the guide grooves 3225 in the radial plane of the liquid suction hole 3224 forms an angle with the radial direction of the outlet of the liquid suction hole 3224. Specifically, the atomization rotating core 322 includes a connection section 3221 and an atomization section 3222. The connection section 3221 can be connected to the atomization core base 321, while the atomization section 3222 is in contact with the atomization core cap 323. The guide grooves 3225 are provided on the atomization section 3222 and cooperate with an inner surface of the atomization core cap 323 to form a part of the aforementioned airflow channel. A central part of the atomization section 3222 also forms a conical head 3223, and the outlet of the liquid suction hole 3224 is located on this conical head 3223. In the radial plane of the liquid suction hole 3224 (i.e., the plane perpendicular to the axial direction of the liquid suction hole 3224), the projection of the guide grooves 3225 extends from the outside inward, and the extension direction forms an angle with the radial direction of the outlet of the liquid suction hole 3224, meaning that the guide grooves 3225 do not extend along the radial direction of the liquid suction hole 3224. The height of the outer end of the guide grooves 3225 is higher than the height of the inner end thereof, that is, the guide grooves 3225 are inclined. Since the extension direction of the multiple guide grooves 3225 forms an angle with the radial direction of the outlet of the liquid suction hole 3224, it is easy to form a cyclone at the outlet of the liquid suction hole 3224, which facilitates the atomization of the highly viscous essential oil. Experiments have shown that ordinary atomization cores require an air pressure of 20 KPa or more to effectively atomize essential oils, while this atomization core 32 requires only 4 KPa of air pressure to achieve the same level of atomization. It should be noted that the cross-section of the liquid suction hole 3224 can be circular, square, or another shape. When it is square or another shape, the radial direction of the outlet of the liquid suction hole

3224 herein means is referred to the direction extending outward from the center of the outlet of the liquid suction hole 3224 to the surrounding thereof.

[0038] With reference to FIG. 8 and FIG. 10, in a preferred embodiment, the atomization core base 321 runs through from top to bottom, and a mounting plate 3214 is disposed therein. The atomization rotating core 322 is confined between the mounting plate 3214 and the atomization core cap 323. The mounting plate 3214 is provided with a vent hole(s) 3215 that penetrates through the mounting plate 3214 in the vertical direction. The airflow generated by the air pump 4 enters the upper end of the atomization core base 321 through the air inlet channel 311, then passes through the vent hole(s) 3215 to enter the lower end of the atomization core base 321, flows through the guide grooves 3225, and is finally sprayed out from the spray outlet 3231. The vent hole(s) 3215 forms a part of the aforementioned airflow channel. In this embodiment, the mounting plate 3214 is provided with a plurality of vent holes 3215 evenly distributed along the circumferential direction.

[0039] In a preferred embodiment, the liquid suction tube connector 325 is rotatable relative to the atomization core base 321 to facilitate the installation of the essential oil bottle 2. Specifically, the second joint 3253 of the liquid suction tube connector 325 is inserted into the liquid suction channel 3216 of the atomization core base 321 and is secured within the liquid suction channel 3216 to prevent accidental detachment. The second joint 3253 can rotate around its own central axis within the liquid suction channel 3216.

[0040] When the aroma diffuser of the present utility model is in operation, the air pump 4 generates an airflow. The airflow sequentially passes through the pipeline, the air inlet channel 311, the vent holes 3215, and the guide grooves 3225, and then is sprayed out from the spray outlet 3231. This creates a negative pressure at the outlet of the liquid suction hole 3224, causing the liquid suction hole 3224 to draw the essential oil from the essential oil bottle 2 through the liquid suction tube 33. The essential oil is then mixed with the airflow, which is then atomized at the outlet of the liquid suction hole 3224, and then is sprayed out from the spray outlet 3231, forming a fragrant mist. The fragrant mist is sprayed into the essential oil bottle 2, and then, under the action of air pressure, the fragrant mist is discharged through the mist passage holes 315 to the area above the partition plate 314. it then passes through the noise reduction device 34 and is ejected outside the aroma diffuser through the mist outlet 351 of the small noise reduction cover 35.

[0041] The aroma diffuser provided by the present utility model, by arranging the atomization core in the first connection portion, allows the atomization core to extend into the essential oil bottle when the first connection portion is connected to the essential oil bottle. The essential oil bottle simultaneously serves as an atomization chamber, thus avoiding the need to separately provide an atomization chamber, making the structure of the aroma diffusion device more compact.

[0042] The above description is merely for some preferred embodiments of the present utility model and is not intended to limit the present utility model. Any modifications, equivalent substitutions, improvements, etc., made within the spirit and principles of the present utility model should be included within the scope of protection of the present utility model.

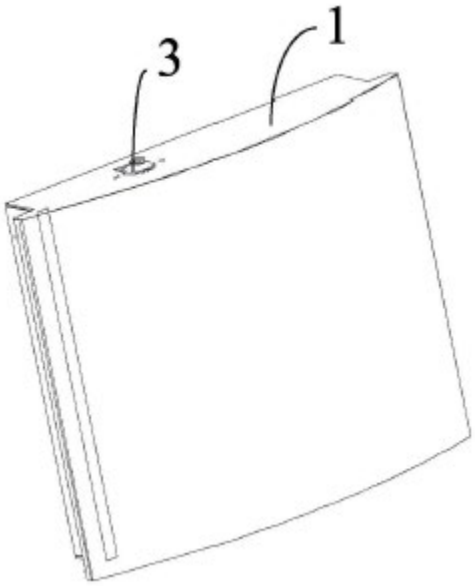

FIG. 1

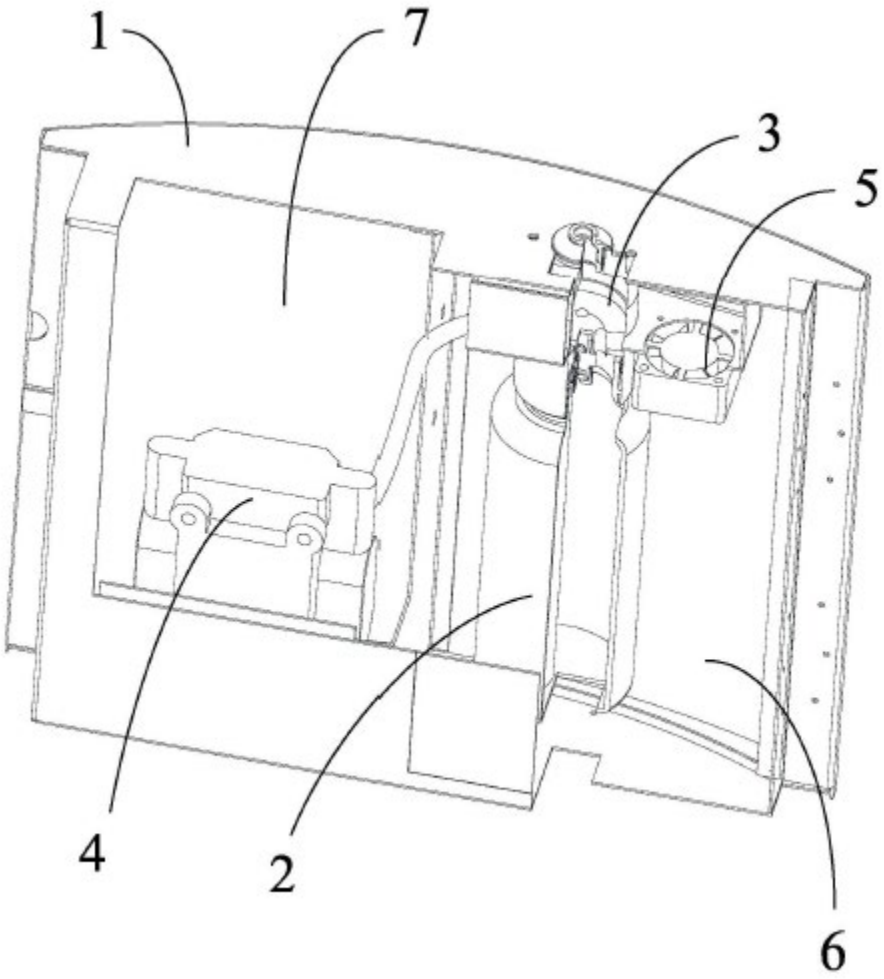

FIG. 2

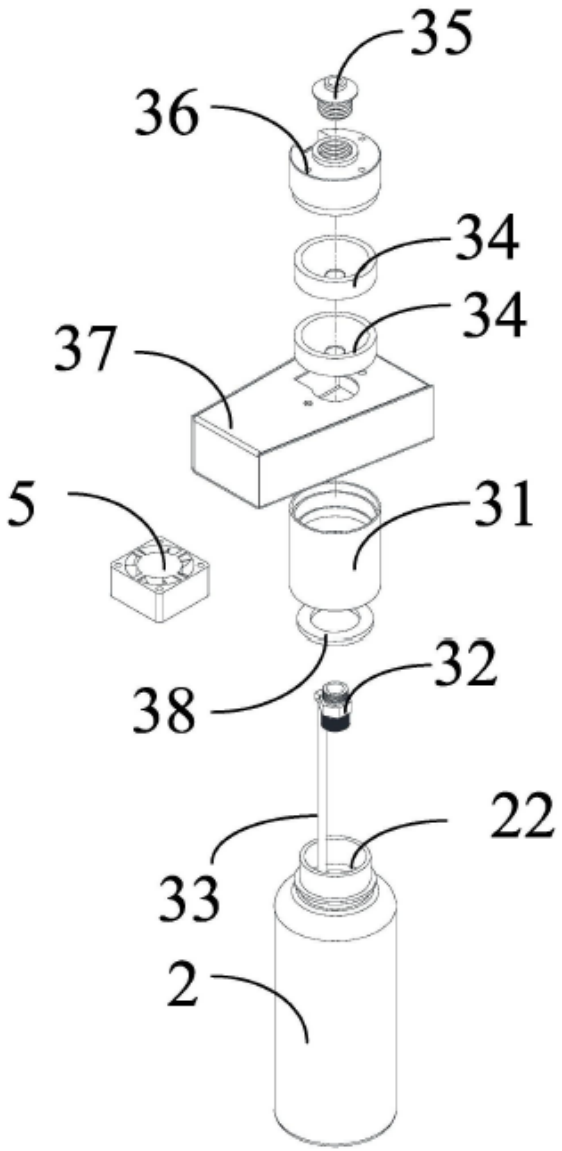

FIG. 3

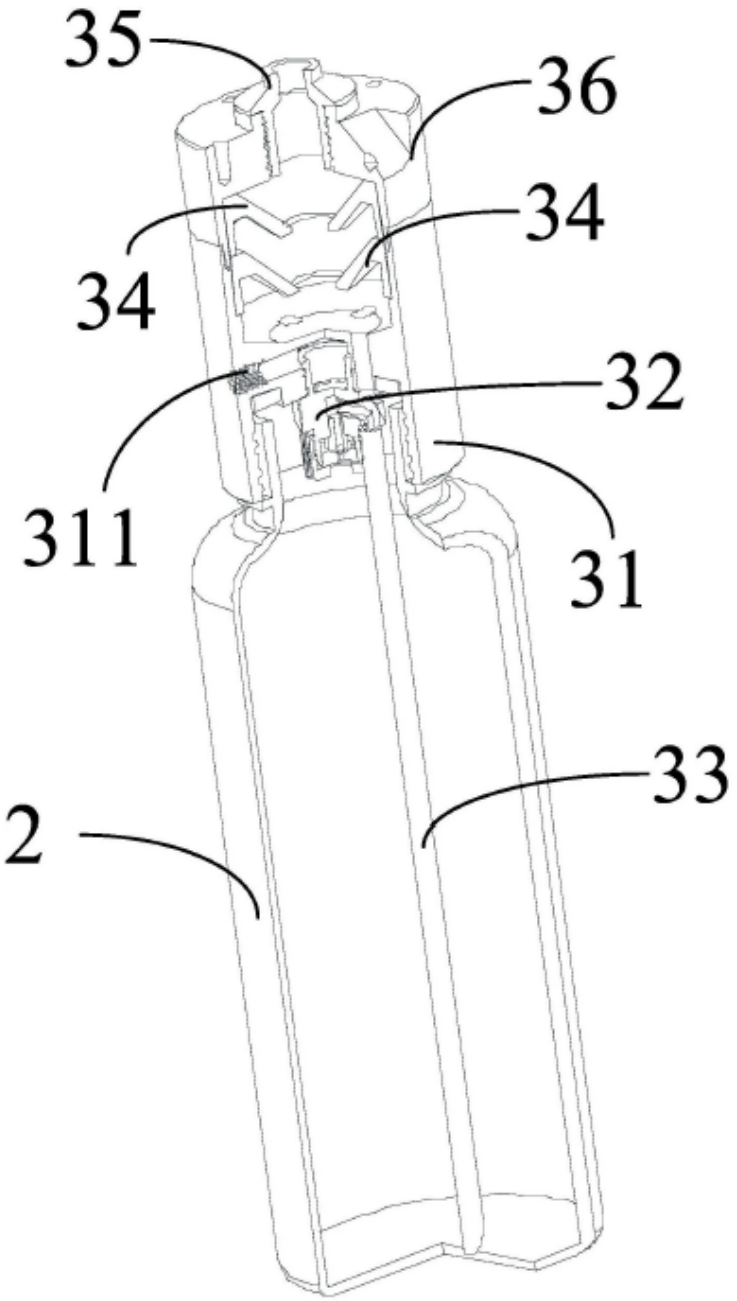

FIG. 4

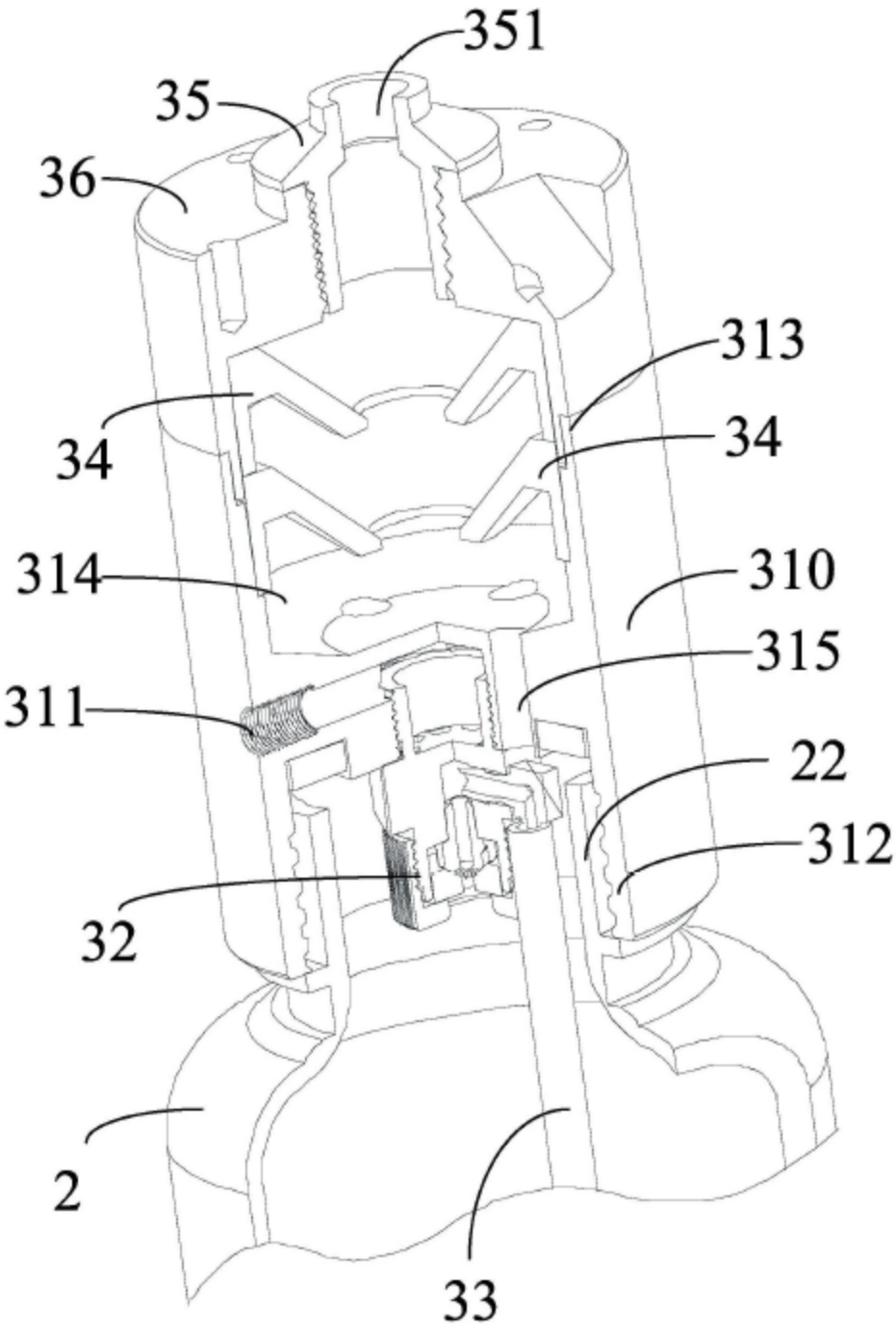

FIG. 5

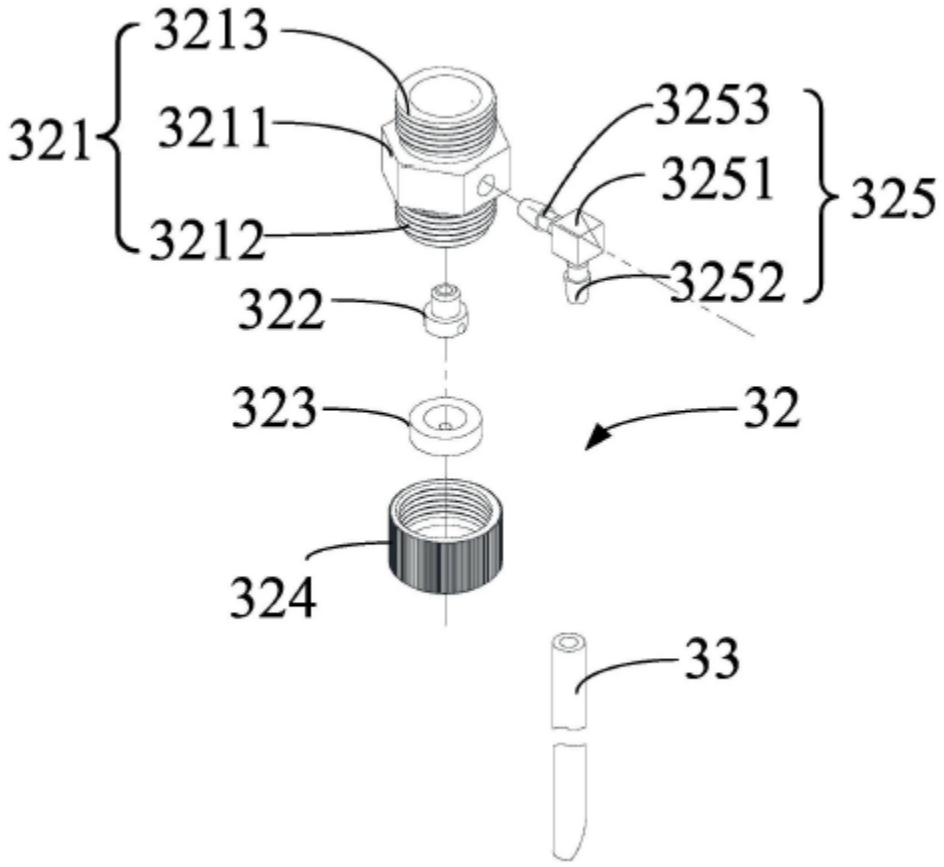

FIG. 6

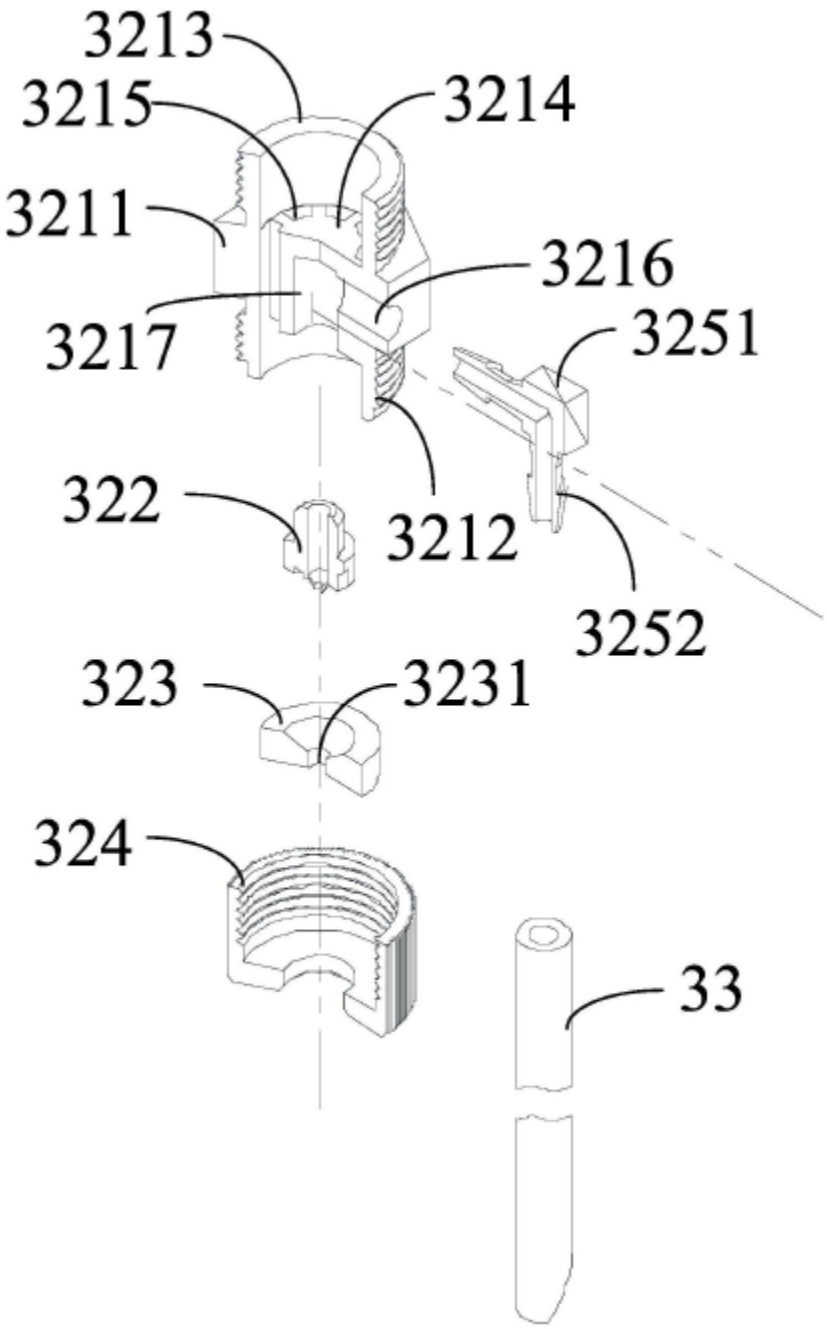
3213
3215
3214
3211
3216
3217
3251
322
3212
3252
323
3231
324
33

FIG. 7

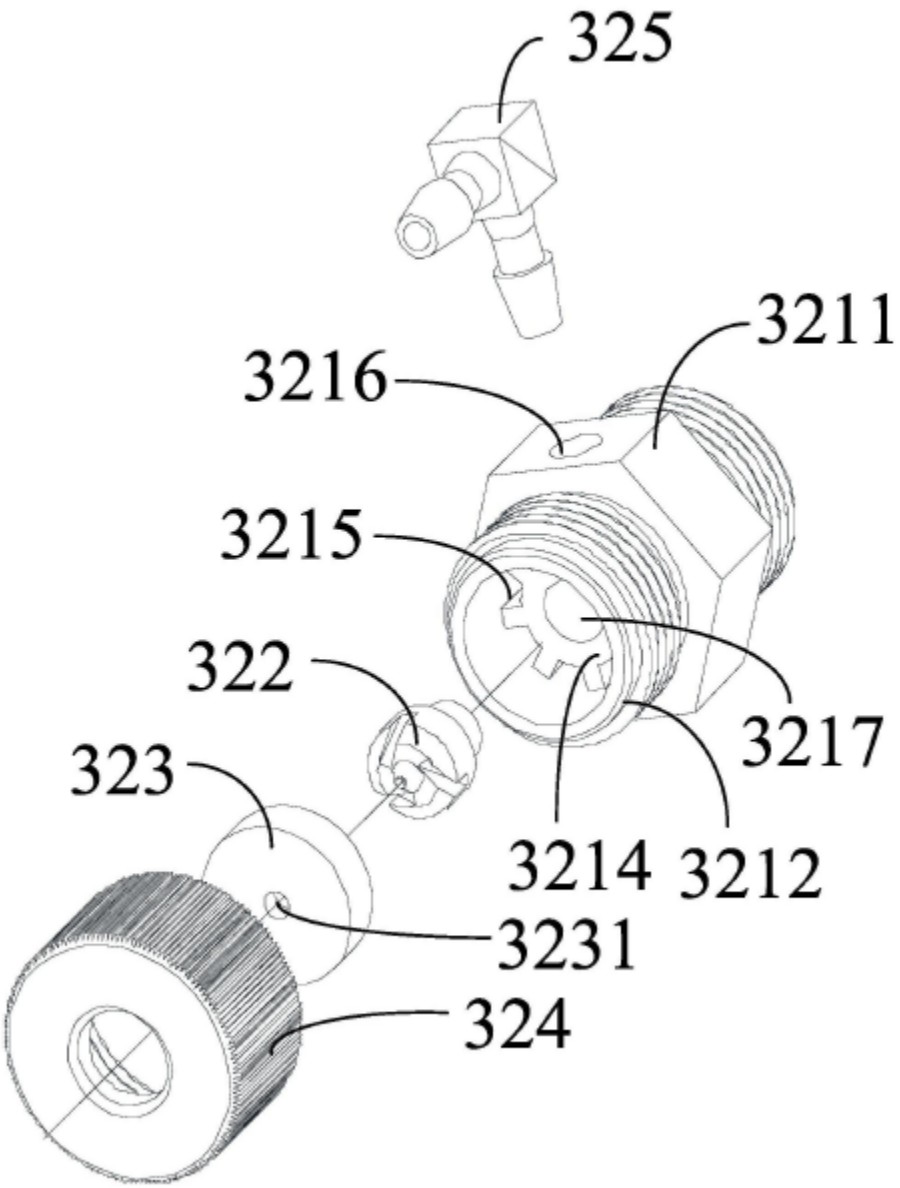

FIG. 8

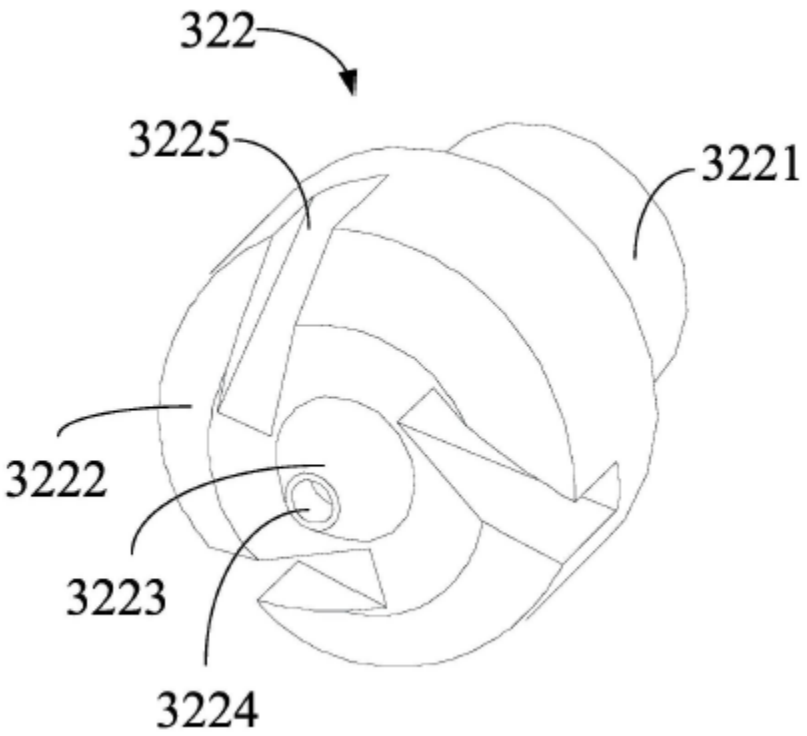

FIG. 9

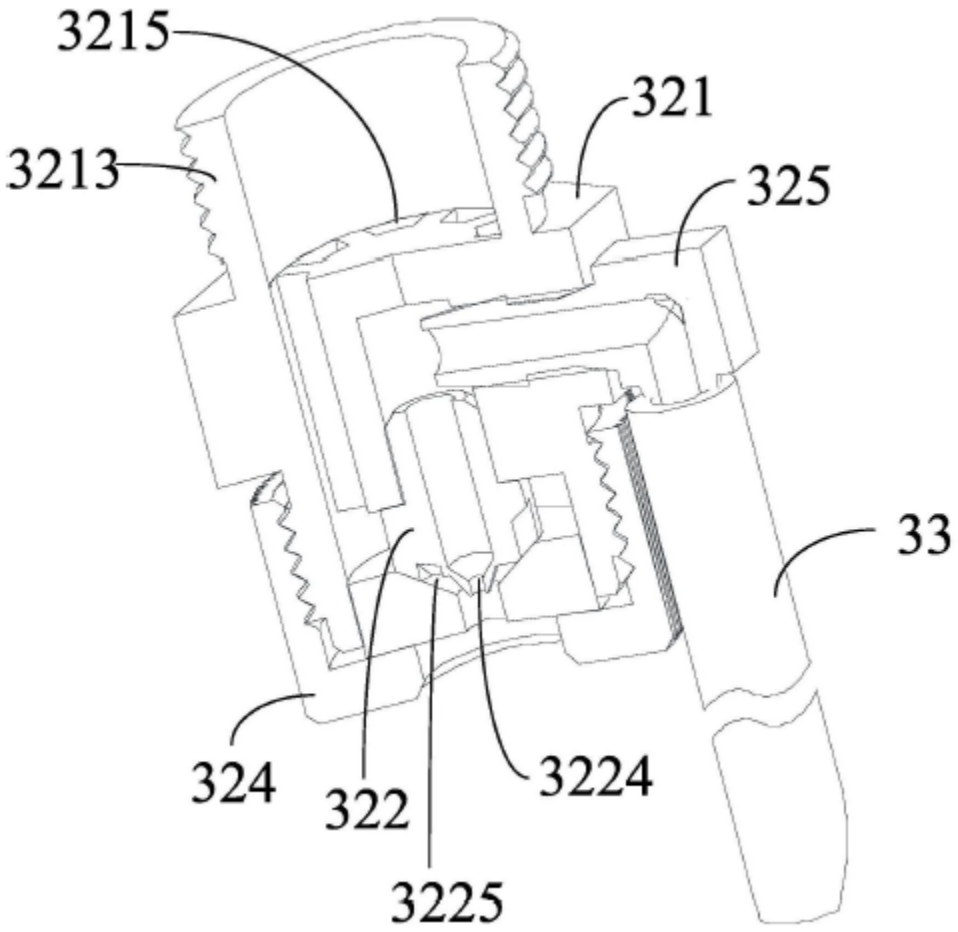

FIG. 10