Filed: March 26, 2025

Filed on behalf of Activision Blizzard, Inc.

UNITED STATES PATENT AND TRADEMARK OFFICE

---

BEFORE THE PATENT TRIAL AND APPEAL BOARD

---

ACTIVISION BLIZZARD, INC.,
Petitioner

v.

MILESTONE ENTERTAINMENT, LLC,
Patent Owner

---

Case No. IPR2025-00713
U.S. Patent No. 11,502,607

---

**Petition for *Inter Partes* Review of**
**U.S. Patent No. 11,501,607**

## TABLE OF CONTENTS

**I. INTRODUCTION ..... 1**

**II. MANDATORY NOTICES ..... 2**

A. Real Parties-in-Interest ..... 2

B. Related Matters ..... 2

C. Notice of Counsel and Service Information ..... 3

D. Fee for *Inter Partes* Review ..... 4

E. Grounds for Standing ..... 4

**III. IDENTIFICATION OF CHALLENGES ..... 4**

**IV. BACKGROUND ..... 5**

A. Overview of the Technology ..... 5

1. Online Gaming ..... 5

2. Virtual Money ..... 6

B. ’607 Patent ..... 7

C. Challenged Claims ..... 9

**V. THE PRIOR ART ..... 10**

A. Kelly683 (EX1005) ..... 10

B. Walker (EX1006) ..... 11

C. Paulsen (EX1007) ..... 15

D. Schneier143 (EX1008) ..... 15



**Milestone Entertainment, LLC - Ex2019**
**Activision Blizzard, Inc. v. Milestone Entertainment, LLC**
**IPR2025-0708**
**Page 2**

**VI. LEVEL OF ORDINARY SKILL ..... 16**

**VII. CLAIM CONSTRUCTION ..... 17**

**VIII. GROUND 1: KELLY683 ALONE OR IN VIEW OF THE KNOWLEDGE OF A POSITA RENDERS OBVIOUS CLAIMS 1, 2, 7, 11, 15, AND 19 ..... 17**

A. Independent Claim 1 ..... 18

1. Preamble ..... 18
2. [1.a] ..... 20
3. [1.a.i] ..... 20
4. [1.a.ii] ..... 22
5. [1.a.iii] ..... 22
6. [1.a.iv] ..... 23
7. [1.b] ..... 28
8. [1.c] ..... 28
9. [1.c.i] ..... 29
10. [1.c.ii] ..... 29
11. [1.c.iii ..... 30
12. [1.c.iv] ..... 30
13. [1.c.v] ..... 31
14. [1.d] ..... 32
15. [1.e] ..... 33

16. [1.f] ..... 34

B. Dependent Claims 2, 7, 11, 15, and 19 ..... 35

1. Claim 2 ..... 35

2. Claim 7 ..... 36

3. Claim 11 ..... 36

4. Claim 15 ..... 37

5. Claim 19 ..... 37

**IX. GROUND 2: KELLY683 IN VIEW PAULSEN RENDERS OBVIOUS CLAIMS 4 AND 6 ..... 38**

A. Motivation to Combine ..... 38

B. Reasonable Expectation of Success ..... 39

C. Dependent Claim 4 ..... 39

D. Dependent Claim 6 ..... 41

**X. GROUND 3: WALKER IN VIEW OF SCHNEIER143 RENDERS OBVIOUS THE CHALLENGED CLAIMS ..... 43**

A. Motivation to Combine ..... 43

B. Reasonable Expectation of Success ..... 44

C. Independent Claim 1 ..... 45

1. Preamble ..... 45

2. [1.a] ..... 48

3. [1.a.i] ..... 49

4. [1.a.ii] ..... 50

5. [1.a.iii] ..... 51

6. [1.a.iv] ..... 51

7. [1.b] ..... 56

8. [1.c] ..... 57

9. [1.c.i] ..... 58

10. [1.c.ii] ..... 60

11. [1.c.iii] ..... 61

12. [1.c.iv] ..... 61

13. [1.c.v] ..... 62

14. [1.d] ..... 63

15. [1.e] ..... 65

16. [1.f] ..... 65

D. Dependent Claims 2, 4, 7, 11, 15, and 19 ..... 66

1. Claim 2 ..... 66

2. Claim 4 ..... 67

3. Claim 6 ..... 68

4. Claim 7 ..... 70

5. Claim 11 ..... 71

6. Claim 15 ..... 71



**Milestone Entertainment, LLC - Ex2019**
**Activision Blizzard, Inc. v. Milestone Entertainment, LLC**
**IPR2025-0708**
**Page 5**

7. Claim 19 ..... 73

**XI. SECONDARY CONSIDERATIONS ..... 73**

**XII. THE BOARD SHOULD REACH THE MERITS ..... 74**

A. Institution is appropriate under § 325(d) ..... 74

B. Institution is appropriate under § 314(a) ..... 74

**XIII. CONCLUSION ..... 74**

# TABLE OF AUTHORITIES

**Page(s)**

## Cases

*Advanced Bionics, LLC v. MED-EL Elektromedizinishche Geräte GmbH*,
IPR2019-01469, Paper 6 (Feb. 13, 2020) ..... 74

*Apple Inc. v. Fintiv, Inc.*,
IPR2020-00019, Paper 11 (Mar. 11, 2020) ..... 74

*Milestone Entertainment, LLC v. Activision Blizzard, Inc.*,
No. 2:24-cv-04056-AB-MRW (C.D. Cal.) ..... 2

*Realtime Data, LLC v. Iancu*,
912 F.3d 1368 (Fed. Cir. 2019) ..... 17

## Statutes

35 U.S.C. § 103 ..... 4, 5, 6

## Other Authorities

37 C.F.R. § 42.10(b) ..... 4

37 C.F.R. § 42.15(a) ..... 4

37 C.F.R. §42.24(a) ..... 78

37 C.F.R. § 42.24(d) ..... 78

37 C.F.R. § 42.100(b) ..... 17

37 C.F.R. § 42.104(a) ..... 4

## TABLE OF EXHIBITS

| Exhibit No. | Description |
|---|---|
| 1001 | U.S. Patent No. 11,501,607 to Katz, et al. ("the '607 Patent") |
| 1002 | File History of U.S. Patent No. 11,501,607 |
| 1003 | Declaration of Dwight Crevelt |
| 1004 | Curriculum Vitae of Dwight Crevelt |
| 1005 | U.S. Patent No. 8,172,683 ("Kelly683") |
| 1006 | U.S. Patent App. Pub. No. 2004/0002369 ("Walker") |
| 1007 | U.S. Patent App. Pub. No. 2005/0153768 to Paulsen ("Paulsen") |
| 1008 | U.S. Patent No. 5,970,143 to Schneier et al. ("Schneier143") |
| 1009 | U.S. Patent Pub. No. 2003/0078102 to Okita et al. ("Okita") |
| 1010 | Milestone Entertainment, LLC's Infringement Contentions, Appendix F |
| 1011 | U.S. Patent No. 6,511, 377 to ("Weiss") |
| 1012 | U.S. Patent No. 5,371,345 to ("LeStrange345") |
| 1013 | U.S. Patent No. 5,470,079 to ("LeStrange079") |
| 1014 | U.S. Patent No. 5,326,104 to ("Pease104") |
| 1015 | U.S. Patent No. 5,766,076 to ("Pease076") |
| 1016 | U.S. Patent No. 5,855,515 to ("Pease515") |

| Exhibit No. | Description |
|---|---|
| 1017 | U.S. Patent No. 5,902,983 to ("Crevelt983") |
| 1018 | U.S. Patent No. 6,347,738 to ("Crevelt738") |
| 1019 | U.S. Patent No. 6,547,131 to Foodman ("Foodman") |
| 1020 | Dwight & Louise Crevelt, Slot Machine Mania 186-889, 224-27 (1988-89) |
| 1021 | Dwight & Louise Crevelt, Video Poker Mania 120-123 (1991) |
| 1022 | Edward Castronova, *Virtual Worlds: A First-Hand Account of Market and Society on the Cyberian Frontier,* CESifo Working Paper No. 618 (2001) |
| 1023 | Edward Castronova, *On Virtual Economies*, CESifo Working Paper No. 752 (2002) |
| 1024 | Richard A. Bartle, *Pitfalls of Virtual Property*, The Themis Group, (2024) |
| 1025 | Elizabeth Kolbert, *Pimps and Dragons: How an online world survived a social breakdown* 88 (May 28, 2001) |
| 1026 | U.S. Patent App. Pub. No. 2003/0114220 to ("McClintic") |

# I. INTRODUCTION

Activision Blizzard, Inc. ("Petitioner") respectfully requests *inter partes* review of claims 1, 2, 4, 6, 7, 11, 15, and 19 of U.S. Patent No. (EX1001, "'607 Patent") and a finding that all challenged claim of the '607 Patent are unpatentable.

For decades, casinos and game developers have implemented various methods to increase player engagement. One such method enables the system to automatically adjust the game so that it is not too difficult (causing a player to become frustrated) or too easy (causing a player to lose interest). Under this method, the game provider sets "mandated parameters" that must be achieved by the system as a whole, such as prize pay out or win rates. The system will then modify "variable parameters" that characterize the prizing or game structure to achieve the mandated parameters. For example, if the current prize pay out or win rates are too high, the system will decrease the prize costs or make game play more difficult. If too low, the system will increase the prize costs or make game play easier.

By 2004, systems implementing this mandated-parameters method were already well-known. For example, U.S Patent No. 8,172,683 to Kelly (EX1005, "Kelly683") discloses a system that "provides an operator the ability to…determine the desired prize costs and win ratios" and adjust the system to achieve these objectives accordingly. EX1005, 5:4-5. Similarly, U.S. Patent App. Pub. 2004/0002369 to Walker et al. (EX1006, "Walker") discloses a system that

"facilitate[s] adjustment of a game in order to help ensure that a set of results obtained during a plurality of game plays of a game satisfy one or more predetermined criteria." EX1006, ¶[0022]. Yet these mandated-parameters systems is what the '607 Patent claims.

Accordingly, Petitioner respectfully requests the Board institute review and find all challenged claims of the '607 Patent unpatentable.

## II. MANDATORY NOTICES

### A. Real Parties-in-Interest

The real party-in-interest is Activision Blizzard, Inc., which is a wholly-owned subsidiary of Microsoft Corporation.

### B. Related Matters

U.S. Patent Office records indicate that the '607 Patent is assigned to Milestone Entertainment, LLC ("PO"), which is currently asserting the '607 Patent in the following concurrent litigation filed on May 15, 2024: *Milestone Entertainment, LLC v. Activision Blizzard, Inc.*, No. 2:24-cv-04056-AB-MRW (C.D. Cal.).

Petitioner has filed, at substantially the same time that this Petition was filed, petitions for *inter partes* review against related family members U.S. Patent No. 8,529,336; U.S. Patent No. 11,335,164; U.S. Patent No. 11,393,279; U.S. Patent No. 10,650,635; and U.S. Patent No. 10,825,294.

### C. Notice of Counsel and Service Information

Petitioner provides the following designation of counsel:

| | |
|---|---|
| Lead Counsel | Lisa K. Nguyen (Reg. No. 58,018)<br>Paul Hastings LLP<br>1117 S. California Avenue<br>Palo Alto, CA 94303<br>Telephone: 650.320.1800<br>Fax: 650.320.1900<br>Email: PH-Activision-Milestone@paulhastings.com |
| Back-Up Counsel | Naveen Modi (Reg. No. 46,224)<br>Paul Hastings LLP<br>2050 M St., N.W.<br>Washington, DC, 20036<br>Telephone: 202.551.1700<br>Fax: 202.551.1705<br>Email: PH-Activision-Milestone@paulhastings.com |
| Back-Up Counsel | Eric E. Lancaster (*pro hac vice* to be filed)<br>Paul Hastings LLP<br>1117 S. California Avenue<br>Palo Alto, CA 94303<br>Telephone: 650.320.1800<br>Fax: 650.320.1900<br>Email: PH-Activision-Milestone@paulhastings.com |
| Back-Up Counsel | Joshua Yin (*pro hac vice* to be filed)<br>Paul Hastings LLP<br>1117 S. California Avenue<br>Palo Alto, CA 94303<br>Telephone: 650.320.1800<br>Fax: 650.320.1900<br>Email: PH-Activision-Milestone@paulhastings.com |
| Back-Up Counsel | Alexa J. Lowman (*pro hac vice* to be filed)<br>Paul Hastings LLP<br>2050 M St., N.W.<br>Washington, DC, 20036 |

| | |
|---|---|
| | Telephone: 202.551.1700<br>Fax: 202.551.1705<br>Email: PH-Activision-Milestone@paulhastings.com |

Pursuant to 37 C.F.R. § 42.10(b), a Power of Attorney accompanies this petition. Petitioner consents to electronic service by e-mail.

### D. Fee for *Inter Partes* Review

The Director is authorized to charge the fee specified by 37 C.F.R. § 42.15(a) to Deposit Account 50-2613.

### E. Grounds for Standing

Petitioner certifies pursuant to 37 C.F.R. § 42.104(a) that the '607 Patent is available for *inter partes* review and that Petitioner is not barred or estopped from requesting an *inter partes* review challenging the patent claims on the grounds identified in this Petition.

## III. IDENTIFICATION OF CHALLENGES

**Ground 1:** Claims 1, 2, 7, 11, 15, and 19 are obvious under 35 U.S.C. § 103 over Kelly683[1] alone or in view of the knowledge of a person of ordinary skill in the art.

[1] U.S. Patent No. 8,172,683 to Kelly et al. (EX1005, "Kelly683") is §§102(a) and (e) prior art.

**Ground 2:** Claims 4 and 6 are obvious under 35 U.S.C. § 103 over Kelly683 in view of Paulsen.[2]

**Ground 3:** Claims 1, 2, 4, 6, 7, 11, 15, and 19 are obvious under 35 U.S.C. § 103 over Walker[3] in view of Schneier143.[4]

## IV. BACKGROUND

### A. Overview of the Technology

#### 1. Online Gaming

Wide area networked gaming systems have been around as late as the 1980s. Crevelt ¶¶28-61. One of the first networked gaming machines was IGT's Megabucks. *Id.* ¶28. A central server system was connected via phone lines to a controller in each system. *Id*. By the mid-1990s, cashless gaming, Internet gaming, and downloadable gaming functions were well on its way. *Id*. Initially, Internet gaming used software clients downloaded to a player's personal computer to access

[2] U.S. Patent App. Pub. No. 2005/0153768 to Paulsen (EX1007, "Paulsen") is §102(e) prior art.

[3] U.S. Patent App. Pub. No. 2004/0002369 to Walker et al. (EX1006, "Walker") is §§102(a) and (e) prior art.

[4] U.S. Patent No. 5,970,143 to Schneier et al. (EX1008, "Schneier143") is §§102(a) and (e) prior art.

the network and provide rich graphics. *Id*. Many companies like Boss Media produced and ran these sites as early as 1996. *Id*. As Internet technology advanced with Javascript and Flash, these Internet sites were able to operate without a downloaded client, and instead allowed users to play through an Internet browser. *Id*.

**2. Virtual Money**

Virtual money has been a mainstay in electronic gaming for decades. Crevelt ¶¶62-90. One of the benefits of virtual money is enhanced player engagement through player tracking and the perception of bigger wins. *Id.* ¶58. By 1990, most major casinos had player tracking systems with virtual money. *Id*. Virtual money could take the form of promotions, points, and cashless gaming. *Id*. Such features often permitted players to transfer credits between a gaming machine and an account on a host computer system so that the player could play gaming machines in a casino without carrying currency and coins from game to game. *Id*. The player could receive virtual currency as part of a promotion or increase the payouts if the player meets certain game play goals. *Id*. The objective of such systems was to encourage the players to play more due to the perception of big wins, or wager the virtual money and ultimately real money as well. *Id*.

**B. '607 Patent**

The '607 Patent describes well-known systems and methods to enhance player participation. The '607 Patent recognized that "various forms of game play, as well as the suggestions for implementing those games on a mass communication network, such as through the telephone or Internet," exist. *Id.*, 5:8-11. But the '607 Patent endeavored to address "a need for improved game of chance, which provide excitement for the player." *Id.*, 5:12-14. The patent did so using mandated and variable parameters.

The '607 Patent discloses a networked gaming system with a play server and remote terminals. "The system and method … permit greatly enhanced flexibility in game play and the prizing experience for a player, while globally achieving the mandated parameters." *Id.*, 5:53-56. The '607 Patent explains "the mandated parameters are generally inputted to the system, and preferably stored in memory." *Id.*, 5:35-36. "Exemplary mandate parameters may consist of prize pay out and win rates, and may include such factors as the minimum payout amount, the maximum payout amount, a defined percentage payout, the number of prizes, and/or the form of prizes." *Id.*, 5:30-34.

The '607 Patent also discloses "variable parameters available for game play ultimately serving to achieve the mandated parameters and/or provide for enhanced or optimized game play and prizing experience." *Id.*, 6:1-4. "[A] variable parameter

may be the game structure itself, such as in the use of decision points, numbers of levels of game play, and/or duration of game play." *Id.*, 6:6-9. Variable parameters may also be "the prizing structure parameters may include the desired payout amount, GLEPS or other allocation variables, the frequency of wins (1:X), overall number of winners and prizing structure and allocation of prizes." *Id.*, 6:35-39.

Another game enhancement touted by the '607 Patent is virtual money. Specifically, the '607 Patent also teaches systems that "provide[] for effecting user experience in an electronic game environment through use of virtual currency or vCoins." *Id.*, Abstract. "vCoins provide the player with the perception of a big win since the numbers are larger than any corresponding monetary amount." *Id.*, 46:61-63. Further, "being able to track specific coins, the vCoins technique leads to vastly expanded possibilities." *Id.*, 46:65-66.

The '607 Patent further teaches that frequent player's club information may be utilized by the system, "where points are rewarded for game play," or "to participate in additional features and functionalities."

### C. Challenged Claims

The challenged claims are entitled to an effective filing date of no earlier than September 1, 2004.[5]

The '607 Patent has 30 claims, 1 independent and 19 dependent claims. Independent claim 1 includes 6 components:

(1) server

(2) communication interface

(3) game processor

(4) memory

(5) decision engine for performing game analytics

(6) prizing system.

The server processes and stores mandated parameters and variable parameters and the game processor implements and modifies the variable parameters. The server further includes registration and payment information for the users, and the game processor further provides game play information with virtual money that can be purchased utilizing the user's payment information.

[5] Petitioner does not concede that any challenged claim is entitled to this priority date. For the purpose of this Petition, it is unnecessary to break the priority chain to a later date.

## V. THE PRIOR ART

### A. Kelly683 (EX1005)

The embodiments of Kelly683 disclose each limitation of independent claim 1 of the ’607 Patent.

Like the ’607 Patent, Kelly683 discloses a networked gaming system that enables a game provider “to optimize user enjoyment” to “help retain current users” and “attract even greater numbers of new users” by providing “an operator the ability to adjust prizes and determined the desired prize costs and ratios.” EX1005, 6:15-19, 5:4-5.

The system includes a casino game server 108 communicating with remote players utilizing game units 10. *Id.*, Abstract, Fig. 4.

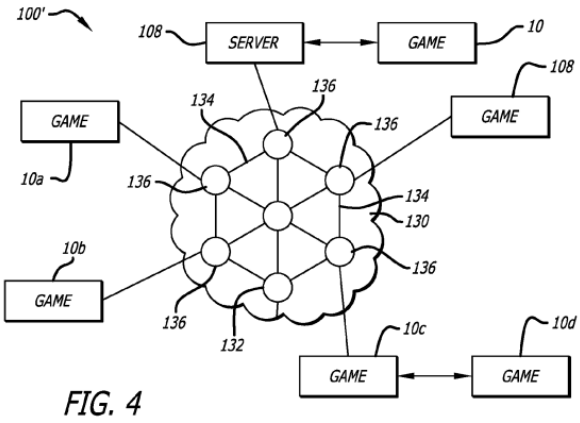


The system further includes a “game processor [that] interprets the commands and influences game states and game events in the game process accordingly.” *Id.*, 10:12-15.

Notably, Kelly683 discloses mandated parameters for the system as a whole to achieve in the form of prize pay out (here, "global payout percentage," *id.*, 5:20-29, 37:27-38:15, 38:58-39:7, Fig. 9a) and "win ratios" (*id.*, 5:3-5, 5:30-43, 5:55-6:3). The Kelly683 system achieves these mandated parameters by modifying variable parameters of the game structure or prizing structure.

For game structure, Kelly683 explains that "[t]he difficulty and thus the average prize credits awarded per game can be adjusted using a variety of techniques that depend on the type of game being played." *Id.*, 38:63-65. This can include adjusting the "speed of controlled objects," "frequencies of winning combinations," "difficulty of the questions," or "[d]urations of games." *Id.*, 38:65-39:7. For prizing structure, Kelly683 recognizes that the "average global payout percentages can be obtained by adding all the individual payout percentages and dividing by the number of prizes." *Id.*, 41:65-67. Thus, the Kelly683 system can adjust the prize costs and prizes available. *Id.*, 41:45-55, 42:59-62.

### B. Walker (EX1006)

In combination, the embodiments of Walker disclose each limitation of independent claim 1 of the '607 Patent, except that it does not expressly disclose using credits during game play (*game play with virtual currency*).

Like the '607 Patent, Walker discloses a game system that "maximize[s] the chances that the players will return in the future to play games." EX1006, ¶[0002].

Walker recognizes that "a player that does not come anywhere near to winning a valuable prize or whose score is particularly low (as compared to scores achieved by other players) is likely to be so discouraged as to avoid playing the game again." *Id.*, ¶[0003]. On the other hand, "[p]layers may also become bored and discouraged if they achieve substantially the same result each time they play a game." *Id.*, ¶[0005]. Thus, Walker is a system that "facilitate[s] adjustment of a game in order to help ensure that a set of results obtained during a plurality of game plays of a game satisfy one or more predetermined criteria." *Id.*, ¶[0022].

The system includes a controller 205 or 300 (that can take the form of a server) communicating with remote players utilizing game devices 210. *Id.*, ¶[0051], Fig. 2; *see also* ¶[0062] ("controller 300 may comprise, for example, a server computer operable to communicate with one or more client devices such as gaming devices 210.").

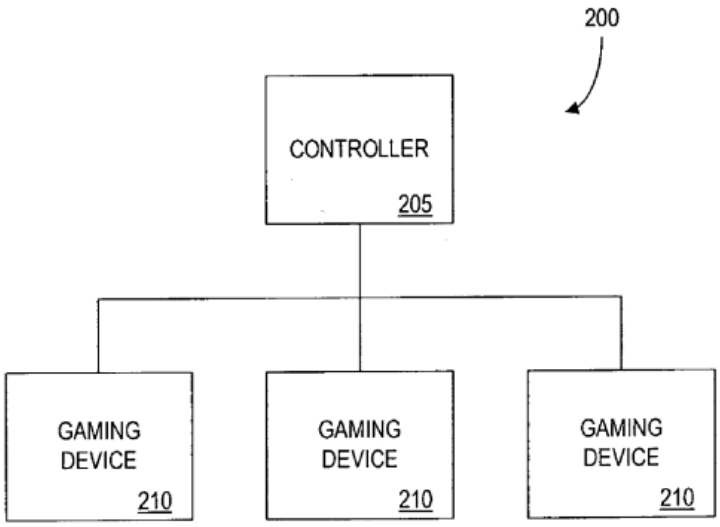


EX1006, Fig. 2.

The system further includes a processor that "performs instructions of the program 320" and can provide game play information from game play database 325 and available game adjustments database 340. *Id.*, ¶¶[0065], [0067].

Walker discloses mandated parameters for the system as a whole in the form of predetermined criteria. *Id.*, Abstract, ¶[0022]. The Walker system achieves these predetermined criteria by modifying variable parameters of the game structure or prizing structure.

For game structure, the predetermined criteria can be achieved by adjusting "one or more game parameters" that "may be variables that affect the performance, scoring, difficulty, outcome, or other aspects of the game." EX1006, ¶[0155]. These game parameters include "factors that affect the difficulty of a game (e.g.,

complexity of a game, hints provided, the sensitivity of controls, difficulty of trivia questions, number of opponents)" (EX1006, ¶[0156]), "rules of a game (e.g., number of strikes allowed in a baseball game, cost of vowels in a word guessing game)" (*id.*, ¶[0159]), "factors that affect the duration of a game (e.g., a number of rounds, a number of lives)" (*id.*, ¶[0160]) and "an amount of time that a player is allowed to achieve an event in a game or complete a game play of the game" (*id.*, ¶[0166]). *See generally* EX1006, ¶¶[0155]-[0166], Fig. 8.

800

| GAME IDENTIFIER: G-5327 802 | |
|---|---|
| AVAILABLE ADJUSTMENT 804 | ANTICIPATED CHANGE IN STANDARD DEVIATION 806 |
| INCREASE SPEED OF SPACESHIP BY 10-20% | + 20 POINTS |
| DECREASE SPEED OF SPACESHIP BY 10-20 % | - 30 POINTS |
| INCREASE NUMBER OF LIVES FROM 3 TO 5 | - 50 POINTS |
| INCREASE NUMBER OF HITS NEEDED TO DESTROY A SMALL METEORITE BY 30-50% AND INCREASE SPEED OF SMALL METEORITE BY 20-30% | + 90 POINTS |
| INCREASE POINTS AWARDED FOR DESTROYING LARGE METEORITE BY 20-30%% AND DECREASE POINTS AWARDED FOR DESTROYING SMALL METEORITE BY 20-30% | - 100 POINTS |
| INCREASE TEMPO OF BACKGROUND MUSIC BY 5% | - 5 POINTS |
| ADD "SLOW DOWN / REVERSE DIRECTION" CAPABILITY TO SPACESHIP | + 30 POINTS |
| DECREASE PRECISION OF SPACESHIP HEADING CONTROLS BY 2 DEGREES | - 40 POINTS |
| INCREASE SPEED OF MISSILES BY 10-20% | + 15 POINTS |

R-8-01 R-8-02 R-8-03 R-8-04 R-8-05 R-8-06 R-8-07 R-8-08 R-8-09

FIG. 8

EX1006, FIG. 8

For prizing structure, Walker explains that the predetermined criteria can be achieved by adjusting "what prize is awarded." EX1006, ¶[0028]. Walker further

discloses "[a]n operator of a gaming establishment may desire to, for example, raise a median or mean score of a game in order to further motivate players by enabling more players to achieve a score that corresponds to a prize (e.g., a more valuable prize) or that is closer to a score that corresponds to a prize." EX1006, ¶[0028].

### C. Paulsen (EX1007)

Paulsen discloses player's club information required by certain dependent claims. Like the '607 Patent and Kelly683, Paulsen discloses a gaming system designed "to maintain player interest in the games." EX1007, ¶[0010]. Paulsen does so by offering player tracking cards and player tracking programs. *Id.*, ¶¶[0008]-[0009]. This system provides "rewards, or 'comps,' to players in proportion to the player's level of patronage (e.g., to the player's playing frequency and/or total amount of game plays at a given casino)." *Id.*, ¶[0008]. "In some instances, a wearable RFID 'club card' can automatically provide player tracking information to a gaming machine." *Id.*, ¶[0048]. "In other instances, a player can input player tracking identification information into a cell phone to provide player tracking information to a gaming machine." *Id.*

### D. Schneier143 (EX1008)

Schneier143 discloses more details of the credits used by Walker (which shares the same inventors). Specifically, Schneier143 discloses using credits during game play (*game play with virtual money*). Schneier143 discloses that such game

credits can also be acquired through game play: "The number of credits available may also be incremented after achieving a certain level of performance in the game." EX1008, 63:23-25. Schneier143 also discloses how game credits can be used to advance levels in a game: "A player might be charged one credit to explore any of the first ten levels of a game, while any of the additional five bonus levels could be explored at a cost of one credit each." *Id.*, 63:13-16. Schneider143 also discloses how game credits can be used to obtain special items to advance levels: "while exploring a ten-level dungeon, the player could be charged an additional credit for the use of a special weapon, access to a map of the dungeon, or hints on avoiding traps." *Id.*, 63:16-19.

## VI. LEVEL OF ORDINARY SKILL

A person of ordinary skill in the art ("POSITA") in 2003 would have had at least a bachelor's degree in computer science or computer engineering, with at least three years of experience in game development. Crevelt ¶102. Additional experience could substitute for less education, and additional education could likewise substitute for less experience. *Id*.

This Petition does not turn on this precise definition, and the challenged claims would be unpatentable from the perspective of any reasonable person of ordinary skill in the art at the relevant time. *Id.* ¶103.

## VII. CLAIM CONSTRUCTION

The Board construes the claims "using the claim construction standard that would be used" in district courts. 37 C.F.R. § 42.100(b). This Petition establishes the prior art meets each claim limitation under any reasonable construction.[6] Therefore, no express construction is necessary.

## VIII. GROUND 1: KELLY683 ALONE OR IN VIEW OF THE KNOWLEDGE OF A POSITA RENDERS OBVIOUS CLAIMS 1, 2, 7, 11, 15, AND 19

The various embodiments of Kelly683 disclose each limitation in the challenged claims of the '607 Patent. Crevelt ¶¶126-173. A POSITA would have combined those embodiments resulting in a system that renders obvious each limitation of the challenged claims.[7] Crevelt ¶126.

---

[6] Petitioner reserves the right to argue alternative constructions in other proceedings, including that the claims are indefinite where such a defense is available.

[7] No findings regarding motivation to combine or reasonable expectation of success are necessary with a single reference ground. *See Realtime Data, LLC v. Iancu*, 912 F.3d 1368, 1372-73 (Fed. Cir. 2019). That said, Kelly683 teaches that the features of the embodiments are options that can be combined, which would have motivated a POSITA to do so. Crevelt ¶127.

### A. Independent Claim 1

#### 1. Preamble

To the extent limiting, Kelly683 discloses the preamble. Crevelt ¶¶128-131. Kelly683 discloses a "gaming system [that] includes a casino game server and a plurality of casino game units connected via a network" (*system for electronic game play*). EX1005, Abstract, Fig. 4. A POSITA would have understood that the server and game units create a *system for electronic game play* because these components are electronic. Crevelt ¶128.

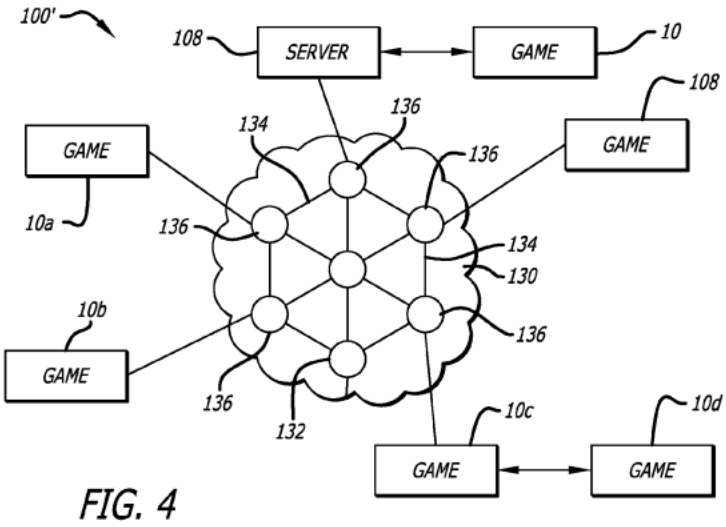


**EX1005, Fig. 4**

Kelly683 discloses that "[p]layers from gaming environments in several different locations can thus interact or compete simultaneously in offered games" (*involving one or more remote users of a system in an electronic environment*) using

the game units (*utilizing electronic communication devices*). EX1005, 31:15-24; *see also* 58:16-18. These game units include display screens and input devices (*electronic communication devices having display capabilities, the electronic communication devices having input capability*). EX1005, 8:57-63 ("Game unit 10 can take a variety of forms, including a video game apparatus having one or more display screens"), 10:43-45 ("Also, input devices such as buttons, switches, and the like allow the player of the game to make various selections concerning game play."); *see also* 9:62-10:15.

The game units of Kelly683 include "[g]ame output devices 18 [that] may influence the game and/or provide feedback to the player about the current state of the game process." EX1005, 10:49-51; *see also* 11:6-9, 11:10-15. A POSITA would have understood that the output provided to the user is influenced by the input (*the electronic communications devices…generate an output corresponding to the input*). Crevelt ¶130; EX1005, 9:62-66 ("Input devices 16 are used by a player or user to provide input to the game unit 10 to influence game events during a game process and to achieve one or more predetermined goals or tasks for scoring points and winning prizes or other types of awards.").

Kelly683 further discloses the game units have memory to store information from the remote server (*the electronic communication devices having storage to store information from a remote source*). For example, in response to the game units,

"[t]he server 108 [can] send[] a web page written in, for example, HTML format back to the requesting game unit or client machine, where it is 'cached' in the memory (typically the RAM, hard disk, or a combination of the two) of the game unit or a client machine." EX1005, 21:58-62.

**2. [1.a]**

Kelly683 discloses this limitation. Crevelt ¶132. Kelly683 discloses that the gaming system (*system for electronic game play*) includes a server 108 (*server*) *including* a storage device (*memory*). EX1005, 18:33-36 ("The *server* 108 can be a separate device or apparatus which includes a controller, such as a microprocessor, and/or *a storage device*, such as a hard disk drive, *memory devices*, and the like."). A POSITA would have understood that server 108 (*server*) is used to process and store information used by the gaming system (*to process and store*). Crevelt ¶132.

**3. [1.a.i]**

Kelly683 alone or in combination with the knowledge of a POSITA renders obvious this limitation. Crevelt ¶¶133-135. Kelly683 discloses that a prize database server is used *to process and store* player registration information, such as a personal user name, or user identification code, and a password (*registration user information of the remote users*). EX1005, 51:59-63 ("When registration is required, unregistered players are provided a registration link in operation 1202. Such link affects the display of an interface such as a web page which prompts the user to

create a personal user name, or user identification code, and a password."); *see also* 3:11-19, 51:49-52:4, 6:11-15.

Although Kelly683 does not expressly disclose that server 108 can also serve as the prize database server where the storage device of server 108 processes and stores the player registration information, it would have been obvious. Crevelt ¶134. Implementing multiple services on a single server was a known design choice. Kelly683 further encourages this design choice, stating: "While this invention has been described in terms of several embodiments, it is contemplated that alterations, permutations, and equivalents thereof will become apparent to those skilled in the art upon a reading of the specification and study of the drawings." EX1005, 45:21-26.

A POSITA would have been motivated to modify server 108 of Kelly683 to further serve as the prize database server to create redundancies in case one server becomes inaccessible or inoperable. Crevelt ¶135. A POSITA would have had a reasonable expectation of success because this is a modification suggested by Kelly683 itself. Crevelt ¶135. Further, the proposed modification would simply be change in programming, involving a combination of known prior art elements according to known methods and techniques to yield predictable results. Crevelt ¶135.

**4. [1.a.ii]**

Kelly683 discloses this limitation. Crevelt ¶136. Kelly683 discloses that the game play information provided by the game processor includes information on an initial game play event based on the user input (*information regarding particular play event*). EX1005, 10:12-15 ("Each type of user input can provide a particular game command to the game processor 12, and the game processor interprets the commands and influences game states and game events in the game process accordingly."); *see also* 1:44-46, 9:62-66, 46:32-37, 46:49-52.

**5. [1.a.iii]**

Kelly683 alone or in combination with the knowledge of a POSITA renders obvious this limitation. Crevelt ¶¶137-139. The gaming system of Kelly683 allows "a monetary value to be billed to a player or deducted from a player's monetary account at a bank or other institution" (*payment information of the remote users*). EX1005, 9:33-41.

Although Kelly683 does not expressly disclose that server 108 processes and stores the monetary account of the remote users, it would have been obvious. Kelly683 explains that "player identification and/or password…allows a monetary value to be billed to a player or deducted from a player's monetary account at a bank or other institution." EX1005, 9:33-41. A POSITA would have implemented the gaming system such that server 108 processes and stores the monetary account of

the remote users with the player identification, password, and other player registration information. Crevelt ¶138.

A POSITA would have been motivated to implement server 108 of Kelly683 to process and store the monetary account of the player with the other registration information since such information is associated with each other. Crevelt ¶139. A POSITA would have had a reasonable expectation of success because the proposed modification would simply be change in programming, involving a combination of known prior art elements according to known methods and techniques to yield predictable results. *Id*.

**6. [1.a.iv]**

Kelly683 discloses this limitation. Crevelt ¶¶140-149.

Kelly683 discloses *mandated parameters* that *represent parameters which must be achieved by the system as a whole*. Crevelt ¶140. The '607 Patent discloses that the game play system includes mandated parameters that "may consist of prize pay out and win rates, and may include such factors as the minimum payout amount, the maximum payout amount, a defined percentage payout, the number of prizes, and/or the form of prizes." EX1001, 5:30-34.

Like the '607 Patent, the gaming system of Kelly683 includes a "global payout percentage" (EX1005, 5:20-29, 37:27-38:15, 38:58-39:7, Fig. 9a) and "win ratios" (EX1005, 5:3-5, 5:30-43, 5:55-6:3). Crevelt ¶141. Again, like the '607

Patent, the payout and win ratios may include such facts as a defined percentage payout, the number of prizes and form of prizes, as Kelly683 explains that "[t]he term 'payout', as used herein, is intended to refer to any transfer of monetary value given back to the player of the game apparatus or game system. Most commonly for redemption systems, payout is in the form of prizes, but it may also be cash, unredeemed tickets, prize credits, and the like." EX1005, 37:23-27.

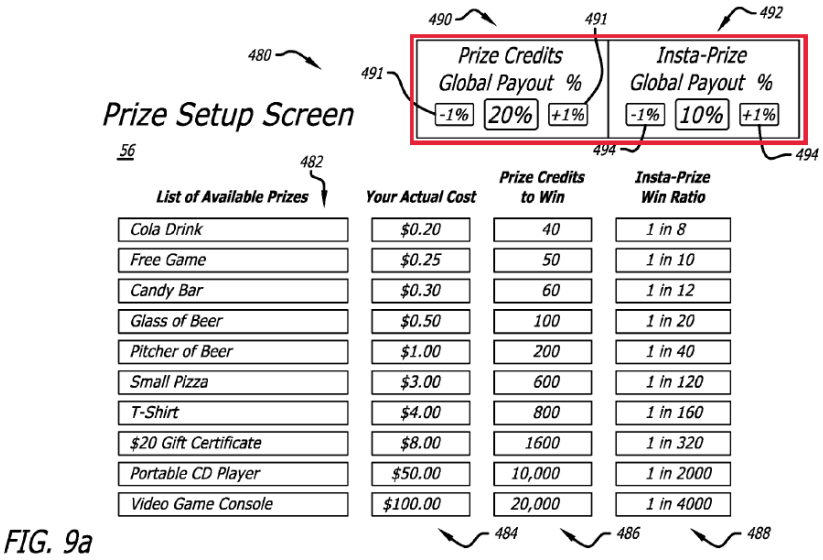

FIG. 9a

**EX1005, Fig. 9a**

Kelly683 discloses that the global payout percentage and win ratios *must be achieved by the system as a whole*. Crevelt ¶142. "The prize payout percentage 490 indicates the payout of the game unit 10 as a percentage of an operator's revenue from the game that the operator will pay back, on average, to players in the form of prize credits or prizes purchased using prize credits." EX1005, 37:35-39. Similarly,

Kelly683 explains that "the specific prize ratios 488 are automatically determined by the redemption system based on other operator input such as actual cost 484 and the specific prize global win ratio 492." EX1005, 37:11-14.

Kelly683 discloses *variable parameters* that *represent parameters characterizing at least one of: a game structure and a prizing structure.* Crevelt ¶143. The '607 Patent discloses that a "variable parameter may be the game structure itself, such as in the use of decision points, numbers of levels of game play, and/or duration of game play." EX1001, 6:6-9. The variable parameters may also be a prizing structure, which "may include the desired payout amount, GLEPS or other allocation variables, the frequency of wins (1:X), overall number of winners and prizing structure and allocation of prizes." EX1001, 6:35-39.

Like the '607 Patent, the gaming system of Kelly683 uses both a *game structure* and *prizing structure*. Crevelt ¶144. For *game structure*, Kelly683 explains that the global payout percentage and win ratio can be achieved by adjusting the game structure:

> For example, in an action game the speed of controlled objects, response of input devices, and the like, can be adjusted so that most players don't receive a score higher than particular value. In card games, the frequencies of winning combinations of cards can be adjusted. In quiz games, the difficulty of the questions at various times during the game can be adjusted so that average players will typically win a certain number of prize credits per game.

> Durations of games, which have a fixed duration, can also be adjusted to achieve an average payout level of prize credits.

EX1005, 38:65-39:7. For *prizing structure*, Kelly683 discloses that the gaming system will automatically adjust the prizing structure to meet the desired goals:

> [T]he redemption system of the present invention vastly decreases operator involvement in a prize redemption system and the overhead of maintaining a prize structure for redemption games. An operator need only input desired prizes and a desired percentage of income that is to be paid back to players, and the system can automatically determine prize credit costs and win ratios for the entered prizes, which achieve the desired profitability of the game apparatus. These entered prizes and prize costs are then automatically provided to players on the game apparatus. This reduces the operator's need to update prizes and prize costs, and it provides a far more exact system for maintaining prizes and achieving a desired profitability of offered games, thereby reducing operating and maintenance costs of redemption games and allowing redemption games to be provided in the non-traditional gaming environments.

EX1005, 5:55-6:3.

A POSITA would have understood that the gaming system of Kelly683 uses the global payout percentage and win ratios, as well as the gaming structure and prizing structure *for use in the course of game play*, particularly since the gaming structure and prizing structure are adjusted throughout game play to achieve the global payout percentage and win ratios. Crevelt ¶145.

Kelly683 teaches that server 108 (*server*) processes and stores (*to process and store*) the global payout percentage and win ratios (*mandated parameters*). Crevelt ¶146. Kelly683 teaches the global payout percentage and win ratios are stored in the prize table. EX1005, 44:29-35, Fig. 9a. "Information in the prize table 480 can be stored locally, or by the central location and can be downloaded when needed." EX1005, 43:21-23. A POSITA would have understood that server 108 is included in "central location." Crevelt ¶146.

Kelly683 teaches that server 108 (*server*) processes and stores (*to process and store*) the parameters characterizing the gaming structure and prizing structure (*variable parameters*).

To the extent Kelly683 does not expressly disclose that server 108 processes and stores the *mandated parameters* and *variable parameters*, it would have been obvious. Crevelt ¶148.

A POSITA would have been motivated to implement server 108 of Kelly683 to process and store the monetary account of the player with the other registration information since such information is associated with each other. Crevelt ¶149. A POSITA would have had a reasonable expectation of success because the proposed modification would simply be change in programming, involving a combination of known prior art elements according to known methods and techniques to yield predictable results. *Id.*

**7. [1.b]**

Kelly683 discloses this limitation. Crevelt ¶150. Kelly683 discloses that the gaming system includes a communication device 24 (*a communication interface*) "coupled to a main bus of the system, a telephone modem, a cable modem a direct network connection, or another device for communication information according to standard network or modem protocols" (*adapted to couple bi-directional communications*). EX1005, 13:24-33. A POSITA would have understood that the gaming system uses the communication device for communicating between the players in different locations using game units that also include communication devices (*bi-directional communications between the one or more remotes users utilizing electronics communication devices*). Crevelt ¶150; EX1005, 21:41-43 ("Game units 10a and 10b can be coupled to the Internet 130 with a suitable communication device, such as a network interface, a telephone modem, a cable modem, and the like.").

**8. [1.c]**

Kelly683 discloses this limitation. Crevelt ¶151. Kelly683 discloses a "game processor [that] interprets the commands and influences game states and game events in the game process accordingly" (*a game processor…generating game play information*). EX1005, 10:12-15. The game processor is coupled to RAM and ROM

(*a game processor coupled to memory*) as shown in Fig. 1a. EX1005, 9:27-30, 15:40-16:3, Fig. 1a.

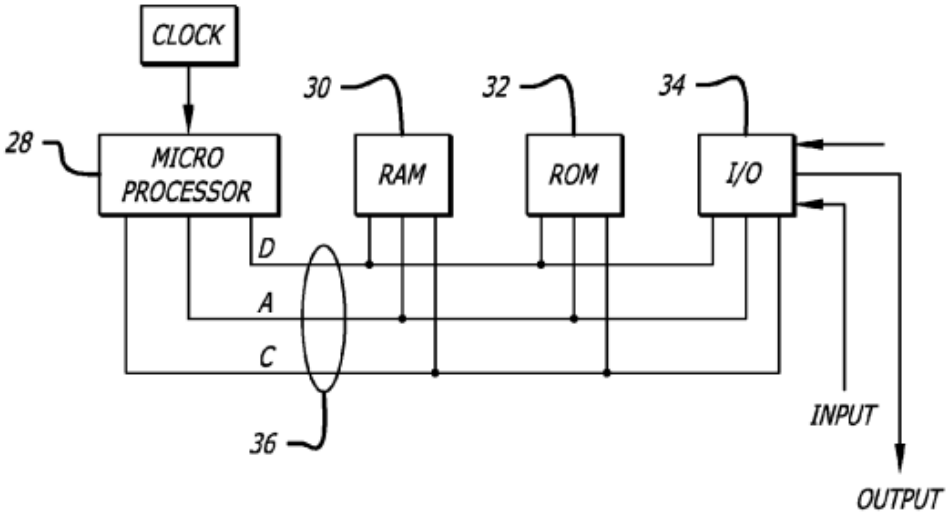


FIG. 1a

**9. [1.c.i]**

Kelly683 discloses this limitation. Crevelt ¶152. Kelly683 discloses that the *game play information* provided by the game processor includes *game play* with game credits (*with virtual money (vCoins)*). EX1005, 9:41-43 ("a signal is sent to game processor 12 to increase the player's game credits, i.e., to indicate that one or more game plays have been paid.").

**10. [1.c.ii]**

Kelly683 discloses this limitation. Crevelt ¶153. Kelly683 discloses that game credits can be purchased (*the virtual money (vCoins) being acquired*) using "user

verification or validation [that] can be input by the player, such as a player identification and/or password that, for example, allows a monetary value to be billed to a player or deducted from a player's monetary account at a bank or other institution" (*in response to a purchase utilizing the payment information of the users*). EX1005, 9:33-41.

**11. [1.c.iii**

Kelly683 discloses this limitation. Crevelt ¶154. Kelly683 discloses that "[e]ach game credit [*the virtual money (vCoins) acquired in response to a purchase*] is equal to a fixed monetary value, such as 25 cents [*being subject to a multiplier*]." EX1005, 23:42-58; *see also* 52:59-60. A POSITA would have understood that the relationship between the game credit and the fixed monetary value is a multiplier. Crevelt ¶154.

**12. [1.c.iv]**

Kelly683 discloses this limitation. Crevelt ¶¶155-157. Kelly683 discloses multiple ways of *implementing a first set of variable parameters to provide a first game play experience.* Crevelt ¶155. One way uses the *gaming structure* where *a first game play experience* is less difficult. *Id*. Kelly683 discloses that "[i]t is possible for the game's manufacturer's to adjust game difficulty so that, on average, a predetermined number of prize credits will be awarded for each game played." EX1005, 38:58-60.

Another way uses the *prizing structure* where *a first game play experience* results in "a 'best fit' of prizes awarded according to the operator's odds." EX1005, 36:63-66. "For example, every 8,000 games, two video consoles are to be awarded." EX1005, 37:1-3; *see also* Crevelt ¶156; *see also* EX1001, 16:54-17:3 ("The game play experience may be varied by changing the play probabilities. In one implementation, game play experience may utilize real world probabilities for the game play portion of the experience, but utilize other probabilities for the prizing portion of the overall game.").

A POSITA would understand that the game processor implements the first set of variable parameters. Crevelt ¶157; EX1005, 9:15-18 ("Game processor 12 implements (e.g., controls, influences, coordinates, monitors, calculates, and the like) the functions of the game unit 10 during a game process and includes several input and output functions.").

**13. [1.c.v]**

Kelly683 discloses this limitation. Crevelt ¶¶158-160. Kelly683 discloses *modifying the variable parameters* (discussed in Section VIII.A.11) *to provide a second set of variable parameters providing a second game play experience.* Crevelt ¶158. First, Kelly683 discloses adjusting the parameters characterizing the *gaming structure* (*variable parameters*) to provide a more difficult game play (*a second set of variable parameters providing a second game play experience*). EX1005, 38:63-

39:7. Kelly683 discloses that *the first game play experience differs from the second game play experience* because the second game play experience is more difficult than the first game play experience (e.g., more difficult to achieve a score higher than a particular value, frequencies of winning combinations is lower, difficulty of questions is higher). *Id.*; Crevelt ¶158.

Second, Kelly683 discloses adjusting the parameters characterizing the prizing structure (*variable parameters*) to provide prizes at different odds. EX1005, 36:63-37:9; Crevelt ¶159. "For example, every 8,000 games, two video consoles are to be awarded. If it is randomly determined that a third video console is to be awarded within, e.g., the 3,000th game, then a different prize can be awarded so that the desired odds are better met." EX1005, 37:1-6. Kelly683 discloses that *the first game play experience differs from the second game play experience* because the play probabilities have changed. *Id.*; Crevelt ¶159; *see also* EX1001, 16:66-17:1 ("The game play experience may be varied by changing the play probabilities.").

A POSITA would understand that the game processor modifies the variable parameters to provide a second set of variable parameters. Crevelt ¶160; EX1005, 9:15-18.

**14. [1.d]**

Kelly683 discloses this limitation. Crevelt ¶161. Kelly683 discloses that "server 108 can store the prize credits won by a player over previous game sessions

and can send this information to an individual game unit when requested by the game unit, e.g., when the player associated with a credit account plays a game on the game unit." EX1005, 24:7-18; *see also* EX1001, 8:2-4. A POSITA would have understood that the credit account (*account information*) *varies through game play* as the player wins or loses. Crevelt ¶161; EX1005, 15:17-23. A POSITA would have further understood that the storage device of server 108 stores (*memory storing*) the credit account (*account information*). *Id*.

**15. [1.e]**

Kelly683 discloses this limitation. Crevelt ¶¶162-164. The term "decision engine" appears once in the '607 Patent, explaining that the "decision engine" uses data—including "user specific play, such as the number of times a game is played during one contact or session, whether the player continuously plays that game without interruption, e.g., diverting to other forms of entertainment or information, and the frequency between player visits, such as to a sponsoring website"—" to optimize the prizing structure for a desired end goal, e.g., maximizing game play and therefore sales of game plays." EX1001, 45:31-39.

Kelly683 discloses a process for "providing statistical information" (*a decision engine for performing game analytics on the game play*). EX1005, 32:27-33. This statistical information includes the "number of times the player has played" (EX1005, 25:23-24), "the time the player took to play a game, the number of times

a player has participated in similar previous tournaments, and the like" (EX1005, 32:27-33), "the number of games played and the number of times the specific prize goal was hit" (EX1005, 40:33-45), and "the amount of times a particular game is played, the number of times that difference games are played, or by achieving a game-related goal" (EX1005, 56:49-51).

The gaming system of Kelly683 uses this statistical information to optimize the prizing structure for a desired goal (*determine the selection of the first or second programmable variable parameters utilizing the recorded game play information with predefined criteria)*. *See, e.g.,* EX1005, 36:63-66 ("In one embodiment, the random determination of whether a particular prize is to be awarded is also modified by statistical information to create a 'best fit' of prizes awarded according to the operator's desired odds.").

**16. [1.f]**

Kelly683 discloses this limitation. Crevelt ¶¶165-166. Kelly683 discloses a prize award operation 1112 and redemption operation 1114 (together, *a prizing system*) that awards prizes to the players (*to award a win to the one or more remote users*). The prizes (*win*) is determined by the *prizing structure.* Crevelt ¶165. Specifically, "the redemption system provides an operator the ability to adjust prizes and determine the desired prize costs and win ratios." EX1005, 5:3-5. Kelly683

discloses that "the prize information is automatically determined for each of the prizes in view of a desired profitability of the game apparatus." EX1005, 5:7-19.

To the extent that *to award a win* is construed to exclude to award a prize, Kelly683 also discloses determining a "winning player" based on the outcome of at least one game in a tournament. Crevelt ¶166; EX1005, 58:50-52 ("a second portion of the total amount of prize credits or prizes is awarded to one or more winning players based on the outcome of at least one game thereof."), Fig. 22.

### B. Dependent Claims 2, 7, 11, 15, and 19

#### 1. Claim 2

Kelly683 discloses this limitation. Crevelt ¶¶167-168.

The '607 Patent discloses that a "variable parameter may be the <u>game structure</u> itself, such as in the use of decision points, numbers of levels of game play, and/or <u>duration of game play</u>." EX1001, 6:6-9. Kelly683 discloses automatically "adjust[ing] game difficulty so that, on average, a predetermined number of prize credits will be awarded for each game played." EX1005, 38:58-60; *see also id.*, 38:61-65. More specifically, Kelly683 discloses adjusting the "[d]urations of games" in order to "achieve an average payout level of prize credits." EX1005, 39:5-7; *see also id.*, 38:65-39:7.

**2. Claim 7**

Kelly683 discloses this limitation. Crevelt ¶¶169-170; EX1005, 9:40-55, 23:42-58, 24:4-18, 30:1-16, 20:48-21:3.

For *gaming structure*, Kelly683 discloses modifying the parameters characterizing the gaming structure to increase difficulty (*the first set and second set of variable parameters are set*) based on the average prize credits awarded across game units (*based on a comparison of game play information across multiple user devices*). EX1005, 38:58-60 ("It is possible for the game's manufacturer to adjust game difficulty so that, on average, a predetermined number of prize credits will be awarded for each game played.").

For *prizing structure*, Kelly683 discloses modifying the parameters characterizing the prizing structure to change the play probabilities (*the first set and second set of variable parameters are set*) based on the frequency of players utilizing game units achieving a specific prize goal (*based on a comparison of game play information across multiple user devices*). EX1005, 40:55-57 ("In the preferred embodiment, each offered game is normalized to the desired specific prize ratios based on the frequency of players achieving the specific prize goal.").

**3. Claim 11**

Kelly683 discloses this limitation. Crevelt ¶171. Kelly683 discloses that the game play information provided by the game processor includes statistical

*information on the users play* including the player's "score 362 of the game" as well as "the time the player took to play a game, the number of times a player has participated in similar previous tournaments, and the like." EX1005, 26:59-27:1, 32:20-33.

**4. Claim 15**

Kelly683 discloses this limitation. Crevelt ¶172. Kelly683 discloses modifying *the prizing structure by modifying the awarding of* tickets, prize credits, or game credits (*non-cash prizes*). EX1005, 12:22-23 ("'tickets' or 'prize credits' are used as a medium of conversion from game score to prize value"), 50:52-53 ("If game credits were won, such game credits are added to the account of the player."); *see also* 16:13-25, 26:59-27:18, 27:55-28:2, 38:55-39:7.

**5. Claim 19**

Kelly683 discloses this limitation. Crevelt ¶173. As discussed in [1,e], Kelly683 discloses a process for providing statistical information (*decision engine for game analytics*), including "[t]he number of times the player has played." EX1005, 25:23-24; *see also* 32:27-33. The number of times a player has played is *user specific play*. Crevelt ¶173.

# IX. GROUND 2: KELLY683 IN VIEW PAULSEN RENDERS OBVIOUS CLAIMS 4 AND 6

## A. Motivation to Combine

A POSITA would have been motivated to combine the teachings of Kelly683 and Paulsen. Crevelt ¶¶174-180.

First, a POSITA would have recognized that the player tracking system taught by Paulsen would have promoted player engagement in Kelly683. Crevelt ¶175. As Paulsen explains, "it is desirable to encourage players to use their player tracking cards during game play." EX1008, ¶[0010]. "These loyalty incentives provide a way to maintain a player's interest in play games at a particular casino." *Id.* This is why "[p]layer tracking cards and player tracking programs have become a de facto marketing method at casinos." *Id.*, ¶[0009].

Second, a POSITA would have been motivated to include the player tracking system to advance the objective of Kelly683 to increase revenue. Crevelt ¶177. Kelly683 explains, "[t]he availability of specific prizes and tournament play on the game unit 10 tends to cause greater player interest and involvement and thus increases the game's earnings." EX1005, 25:10-12. By encouraging players to continue game play through incentives, these programs also increase the amount of money that players spend on game play, thus increasing revenue. Crevelt ¶178.

Third, a POSITA would have been motivated to implement a player tracking program as taught by Paulsen in the system of Kelly683 to improve the user

experience. Crevelt ¶179. For example, "the traditional player tracking programs can be used even more effectively to maintain player interest in the games, and to provide gaming establishments with valuable information that allows them to better serve their players." EX1007, 25:10-15.

### B. Reasonable Expectation of Success

A POSITA would have been able to implement the player tracking system of Paulsen into the game system of Kelly683 with a reasonable expectation of success. Crevelt ¶¶181-183.

First, Kelly683 and Paulsen already track information specific to the player. Including player's club information would have merely required associating additional information to the player's account, for example, by adding another row or table to a database.

Second, it would have involved a combination of known technologies (processors, memory) according to known methods (programming) to yield the predictable result of adding more functionality to an object in the game—namely, player information. Crevelt ¶183.

### C. Dependent Claim 4

Kelly683 in view of Paulsen renders obvious this limitation. Crevelt ¶¶184-185. Kelly683 discloses player's account information that includes a user identification code and tracks a player's credits and prizes (*player's club*

*information*). EX1005, 59:66-60:1("a current amount of available credits of a particular user based on the user identification code"); *see also id.*, 30:34-40, 50:20-22, 50:35-37. To the extent that Kelly683 does not disclose *player's club information*, a POSITA would have been motivated and obvious to implement this feature based on the teachings of Paulsen. Crevelt ¶¶174-180.

Paulsen discloses a *server* that includes information on both player tracking cards, such as club cards, and player tracking programs (either, *player's club information*). EX1007, ¶¶[0008]-[0009]. This system provides "rewards, or 'comps,' to players in proportion to the player's level of patronage (e.g., to the player's playing frequency and/or total amount of game plays at a given casino)." *Id.*, ¶[0008]. "In some instances, a wearable RFID 'club card' can automatically provide player tracking information to a gaming machine." *Id.*, ¶[0048]. "In other instances, a player can input player tracking identification information into a cell phone to provide player tracking information to a gaming machine." *Id.* A POSITA would have recognized that the rewards system taught by Paulsen would have promoted player engagement in Kelly683. Crevelt ¶185. Information such as "how much money the player has wagered on each game, the time when each game was initiated, and the location of the gaming machine" is sent to "a player tracking server" and is used "to generate player tracking points and add the points to a player tracking

account...." *Id.*, ¶[0049]. "The player tracking points generated by the player tracking server are stored in a memory of some type on the player tracking server." *Id.*

A POSITA would have been motivated to modify Kelly683 for the server to include player tracking cards and player tracking programs because it would allow a more detailed view of tracking play, which would allow for rewarding patronage and engagement. Crevelt ¶¶174-180. A POSITA would have recognized that it was desirable to track play "to maintain player interest" as well as "to provide gaming establishments with valuable information...." EX1007, ¶[0010]; Crevelt ¶180. A POSITA would have had a reasonable likelihood of success in implementing such a modification because it would be a simple programming change to track player club information. Crevelt ¶¶181-183. It would have involved a combination of known technologies (processors, memory) according to known methods (programming) to yield the predictable result of adding more functionality to an object in the game—namely, player information. Crevelt ¶¶181-183. Notably, Paulsen already discloses similar tracking of player information. EX1007, ¶[0049].

### D. Dependent Claim 6

Kelly683 in view of Paulsen renders obvious this limitation. Crevelt ¶¶186-187. Kelly683 discloses game credit accounts, prize credit accounts, and a variety of techniques to adjust difficulty, such as adjusting the length of a fixed duration game, so that average prize credits are awarded in order to achieve the global payout

percentage inputted by the operator. EX1005, 40:19-21, 40:33-39. Specifically, Kelly683 discloses a "hit ratio" that the system can automatically adjust to the actual win frequency after a threshold is reached. *Id*. Kelly683 discloses this limitation, *id.*, but to the extent that Kelly683 does not disclose *the player's club information* or *information on non-cash amounts*, a POSITA would have been motivated and obvious to implement these features based on the teachings of Paulsen. Crevelt ¶¶174-180.

Paulsen discloses that the player tracking cards and player tracking programs (either, *player's club information*) includes player tracking points (*information on non-cash amounts*). EX1007, ¶[0049] ("the player tracking server may use the game play information provided by the player tracking unit to generate player tracking points and add the points to a player tracking account identified by the player tracking card").

A POSITA would have been motivated to modify Kelly683 to include player tracking cards and player tracking programs because it would allow a more detailed view of tracking play, which would allow for rewarding patronage and engagement. Crevelt ¶¶174-180. A POSITA would have recognized that the rewards system taught by Paulsen would have promoted player engagement in Kelly683. Crevelt ¶187. A POSITA would have recognized that it was desirable to track play to "to maintain player interest" as well as "to provide gaming establishments with valuable

information....” EX1007, ¶[0010]; Crevelt ¶180. A POSITA would have had a reasonable likelihood of success in implementing such a modification because it would be a simple programming change to track player club information, including information on non-cash amounts. Crevelt ¶¶181-183. It would have involved a combination of known technologies (processors, memory) according to known methods (programming) to yield the predictable result of adding more functionality to an object in the game—namely, player information. Crevelt ¶¶181-83. Notably, Paulsen already discloses similar tracking of player information, including information on non-cash amounts. EX1007, ¶[0049].

## X. GROUND 3: WALKER IN VIEW OF SCHNEIER143 RENDERS OBVIOUS THE CHALLENGED CLAIMS

### A. Motivation to Combine

A POSITA would have been motivated to combine the teachings of Walker and Schneier143. Crevelt ¶¶188-190. Specifically, a POSITA would have recognized that the use of credits during game play by Schneier143 would have been a natural extension of the credits in Walker. Crevelt ¶188.

First, Walker and Schneier143 share the same inventors—namely Jay Walker and James Jorasch. A POSITA implementing and improving the system of Walker would have naturally looked at other patents and applications of the inventors of Walker to identify any features or details that would have improved the system. Crevelt ¶189.

Second, the use of credits during game play, not just to engage in game play, would have enhanced the user experience. For less skilled players, the ability to purchase items that advance the player to the next level would have prevented the player from becoming frustrated. For more advanced players, the ability to earn credit during game play would have made the game more interesting. Crevelt ¶190.

**B. Reasonable Expectation of Success**

A POSITA would have been able to implement the use of credits during game play taught by Schneier143 into the game system of Walker with a reasonable expectation of success. Crevelt ¶¶191-193.

First, the systems of Walker and Schneier143 have substantially similar structures and functions. Crevelt ¶192. Given that Walker and Schneier143 share the same inventors, these structures and function even share the same names. *Id*. Importantly, Walker and Schneier143 use credits in the same way. *Id*. Indeed, Schneier143 merely discloses more detailed functionality.

Second, it would have involved a combination of known technologies (processors, memory) according to known methods (programming) to yield the predictable result of adding more functionality to an object in the game—namely, credits. Crevelt ¶193.

### C. Independent Claim 1

#### 1. Preamble

To the extent limiting, Walker discloses the preamble. Crevelt ¶¶194-199. Walker discloses "system 200…may include a controller 205 (an example of which is depicted in FIG. 3) in one or two-way communication with a plurality of gaming devices 210 (an example of which is depicted in FIG. 4) via a network such as, for example, the Internet or via another communications link" (*system for electronic game play*). EX1006, ¶[0051], Fig. 2; *see also* ¶[0062] ("embodiment 300 of controller 205"). A POSITA would have understood that the controller and gaming devices create a *system for electronic game play* because these components are electronic. Crevelt ¶194; *see also* EX1006, ¶[0062] ("The controller 300 may be implemented as a system controller…or any other equivalent electronic"), [0069] ("The gaming device 400 may be implemented as a system controller…or any other equivalent electronic"), ("The gaming device 400 may comprise any or all of the gaming devices 210").

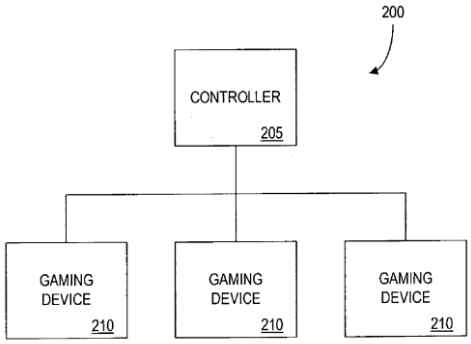


Walker discloses that "a player may remotely operate a gaming device" (*remote users utilizing electronic communication devices*). EX1006, ¶[0091]. The system of Walker allows multiple players to communicate and play through the gaming devices (*involving one or more remote users of a system in an electronic environment*). EX1006, ¶[0055] ("Communication between the gaming devices 210 and the controller 205, and among the gaming devices 210, may be direct or indirect, such as over the Internet through a Web site maintained by a controller 205 on a remote server….").

"The gaming device 400 comprises a processor 405…in communication with an output device 410," which "may comprise, for example, a cathode ray tube (CRT) monitor, liquid crystal display (LCD) screen, or light emitting diode (LED) screen" (*electronic communication devices having display capabilities*). EX1006, ¶[0070]; Fig. 4.

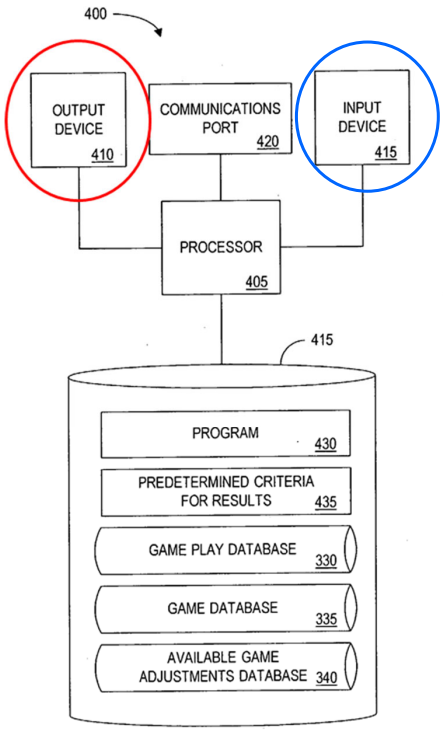


FIG. 4

**EX1006, Fig. 4 (annotated)**

"The gaming device 400 comprises a processor 405…in communication with…an input device 415," which may be "a computer keyboard or keypad, a button, a handle, a keypad, a touch-screen, a microphone" (*electronic communication devices having input capability*). EX1006, ¶[0070]; Fig. 4

Walker discloses *electronic communication devices having input capability and generate an output corresponding to the input* because "the controller…may receive a selection of a game that a player would like to play" and that "a player may

use a player device or a gaming device to select a game that he would like to play from a list of available games." Crevelt ¶198; EX1006, ¶[0219]. Walker explains that "the controller may…direct the gaming device to initiate the requested game." EX1006, ¶[0220]. A POSITA would have understood that the player inputs a selection of a game (e.g., through the input device) and the gaming device outputs the corresponding selected game (e.g., through the display capabilities of the output device 410). Crevelt ¶198.

"The gaming device 400 comprises a processor 405…in communication with…a memory 425" (*electronic communication devices having storage*). EX1006, ¶[0070]. "The memory 425 stores a program 430 for controlling the processor 405" which "may initially be borne on a magnetic disk of a remote computer (*to store information from a remote source*). EX1006, ¶¶[0070], [0072].

**2. [1.a]**

Walker discloses this limitation. Crevelt ¶200. Walker discloses that "controller 300 may comprise, for example, a server computer operable to communicate with one or more client devices such as gaming devices 210." EX1006, ¶[0062]. "The controller 300 comprises a processor 305…in communication with a communications port 310…and a memory 315." EX1006, ¶[0064]. A POSITA would have understood that the controller 205/300 (*server*) is used to process and store information used by the system (*to process and store*) given Walker's teaching

that the controller processes and stores the program for gaming. Crevelt ¶200; EX1006, ¶ [0065] ("The memory 315 stores a program 320 for controlling the processor 305.").

**3. [1.a.i]**

Walker discloses this limitation. Crevelt ¶201. Walker discloses "[t]he tabular representation 500 of the player database 325 includes a number of example records or entries, each indicating a player registered with a gaming establishment" (*register user information of the remote users*). EX1006, ¶[0098]; *see also* ¶ [0104] ("A record may be opened in the player database when a player first registers with a gaming establishment (e.g., as a member of frequent player of the gaming establishment)."). The memory of controller 205/300 processes and stores the player registration information (*server including memory to process and store*). EX1006, ¶[0067] ("The memory 315 also stores a plurality of databases, including a player database 325").

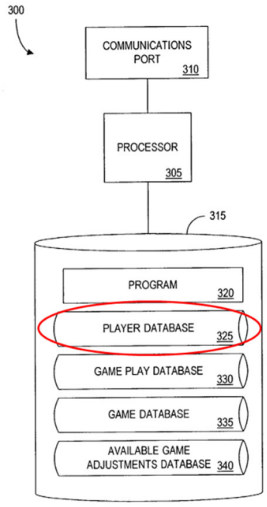


FIG. 3

**4. [1.a.ii]**

Walker discloses this limitation. Crevelt ¶202. Walker explains that the game play database may store information pertaining to certain "lives," "rounds," or "levels" (*game play information regarding particular game play events)*. EX1006, ¶¶[0027] ("A game play comprises an attempt to obtain a score or win a prize in accordance with the rules of the game and ends at a designated time (e.g., once the prize is won or **a number of 'lives' or 'rounds' is played** without having won the prize)."), [0160] (discussing game parameters such as "factors that affect the duration of a game (e.g., **a number of rounds, a number of lives**)"), [0163] (discussing game parameters such as "algorithms that control how points are awarded (e.g., a formula for the number of bonus points that a player receives at

the[] end of **a round of a game play** or at the end of a game play)"), [0245] (discussing "**number of levels** completed"), [0265] (discussing awarding of a prize "if a player achieves a particular…**level of achievement** in one or more game plays of a game (e.g., the player gets to **level 3 of the game** within two consecutive game plays)"); *see also id.*, ¶[0109] ("A game play database 330 stores information about individual game plays conducted on gaming devices of system 200."). A POSITA would have understood that the information collected on the first life/round of several lives/rounds is a first game play event (*game play information regarding particular game play events)*. Crevelt ¶202.

**5. [1.a.iii]**

Walker discloses this limitation. Crevelt ¶203. Walker discloses "[t]he fields [of player database 325] specify…a financial account identifier 520 (e.g., to which a payment associated with game play may be charged or credited to)." EX1006, ¶[0098]; *see also* ¶¶ [0199]-[0204]. As discussed in Section X.C.4, the controller's memory stores the player database, which will include the financial account identifier of remote players (*payment information of the remote users*).

**6. [1.a.iv]**

Walker discloses this limitation. Crevelt ¶¶204-209.

Walker discloses one or more predetermined criteria (*mandated parameters*) that must be satisfied during game play (*represent parameters which must be*

*achieved by the system as a whole*). Crevelt ¶204; *see also* EX1001, 5:30-34. The Walker system achieves the mandated parameters by "adjustment of a game in order to help ensure that a set of results obtained during a plurality of game plays of a game satisfy one or more predetermined criteria (e.g., that a standard deviation of the results is not greater than a maximum predetermined standard deviation and not lower than a minimum predetermined standard deviation)." EX1006, ¶[0022]; *see also* ¶[0023] ("The present invention, in accordance with one or more embodiments, allows a gaming establishment to adjust a game such that results of a game are maintained within a range determined to be desirable by the gaming establishment."), ¶[0024].

Walker discloses *variable parameters* that *represent parameters characterizing at least one of: a game structure and a prizing structure.* Crevelt ¶205; *see also* EX1001, 6:6-9, 6:35-39. Like the '607 Patent, the Walker system uses both a *gaming structure* and *prizing structure*. Crevelt ¶205. For *gaming structure*, Walker explains that the predetermined criteria can be achieved by adjusting "one or more game parameters" that "may be variables that affect the performance, scoring, difficulty, outcome, or other aspects of the game." EX1006, ¶[0155]. These game parameters include "factors that affect the difficulty of a game (e.g., complexity of a game, hints provided, the sensitivity of controls, difficulty of trivia questions, number of opponents)" (EX1006, ¶[0156]), "rules of a game (e.g., number

of strikes allowed in a baseball game, cost of vowels in a word guessing game)" (*id.*, ¶[0159]), "factors that affect the duration of a game (e.g., a number of rounds, a number of lives)" (*id.*, ¶[0160]) and "an amount of time that a player is allowed to achieve an event in a game or complete a game play of the game" (*id.*, ¶[0166]). *See generally* EX1006, ¶¶[0155]-[0166].

For *prizing structure*, Walker explains that the predetermined criteria can be achieved by adjusting "what prize is awarded." EX1006, ¶[0028]. Walker further discloses "[a]n operator of a gaming establishment may desire to, for example, raise a median or mean score of a game in order to further motivate players by enabling more players to achieve a score that corresponds to a prize (e.g., a more valuable prize) or that is closer to a score that corresponds to a prize." EX1006, ¶[0028].

A POSITA would have understood that the Walker system uses the predetermined criteria, as well as the game parameters and prizing, *for use in the course of game play* by determining whether a set of results meets the predetermined criteria (EX1006., ¶¶[0261]-[0264]), and if necessary, adjusting the game by "(i) determining the at least one goal of the adjustment; (ii) determining the one or more game parameters to be adjusted; (iii) determining a respective new value for each of the one or more game parameters to be adjusted; and (iv) executing the adjustment" (EX1006, ¶[0267].). Crevelt ¶207.

A POSITA would have understood that the controller processes and stores (*server including memory to process and store*) the predetermined criteria (*mandated parameters*) and game and prize parameters (*variable parameters* that *represent parameters characterizing at least one of: a game structure and a prizing structure*). Crevelt ¶208; EX1006, ¶[0077] ("The memory 425 [of the controller] also stores a predetermined criteria for results 435."), ¶[0082] ("In one or more embodiments, gaming device 400 may access the predetermined criteria for results 435 from another device rather than storing it locally. For example, gaming device 400 may obtain such information from controller 300."), ¶[0106] ("Note that game parameter values may be stored in a database and retrieved as needed by the gaming device. Alternatively, the gaming device 210 or controller 205 may calculate an appropriate value for a game parameter as necessary."); ¶[0106] ("In another example, a binary indication (e.g., 'yes' or 'no') of whether a prize was won as a result of a game play may be stored in the game play database.") *see also* ¶¶[0067], [0246], Figure 8.

Additionally, Walker discloses monitoring the variance in prizes awarded to ensure the variance in prizes awarded based on the results of the games is not too high which may be discouraging to players. EX1006, ¶[0025] ("a computing device may monitor the games played to determine a variance in prizes awarded based on results of the games. If the variance in prizes awarded is too high, this may be

discouraging to players, since expert players may win large prizes while novice players win almost nothing. Similarly, if the variance in prizes is too low, players may become bored because there is not enough variation in the prizes awarded. If the computing device determines that the variance in prizes for a game is too high or too low, then it may modify the game to alleviate this problem.”).

800

| GAME IDENTIFIER: G-5327 802 | |
|---|---|
| AVAILABLE ADJUSTMENT 804 | ANTICIPATED CHANGE IN STANDARD DEVIATION 806 |
| R-8-01 INCREASE SPEED OF SPACESHIP BY 10-20% | + 20 POINTS |
| R-8-02 DECREASE SPEED OF SPACESHIP BY 10-20 % | - 30 POINTS |
| R-8-03 INCREASE NUMBER OF LIVES FROM 3 TO 5 | - 50 POINTS |
| R-8-04 INCREASE NUMBER OF HITS NEEDED TO DESTROY A SMALL METEORITE BY 30-50% AND INCREASE SPEED OF SMALL METEORITE BY 20-30% | + 90 POINTS |
| R-8-05 INCREASE POINTS AWARDED FOR DESTROYING LARGE METEORITE BY 20-30%% AND DECREASE POINTS AWARDED FOR DESTROYING SMALL METEORITE BY 20-30% | - 100 POINTS |
| R-8-06 INCREASE TEMPO OF BACKGROUND MUSIC BY 5% | - 5 POINTS |
| R-8-07 ADD "SLOW DOWN / REVERSE DIRECTION" CAPABILITY TO SPACESHIP | + 30 POINTS |
| R-8-08 DECREASE PRECISION OF SPACESHIP HEADING CONTROLS BY 2 DEGREES | - 40 POINTS |
| R-8-09 INCREASE SPEED OF MISSILES BY 10-20% | + 15 POINTS |

FIG. 8

EX1006, FIG. 8

**7. [1.b]**

Walker discloses this limitation. Crevelt ¶¶210-211. Walker discloses that each gaming device (*electronic communication device*) used by a player (*one or more remote users*) includes a communications port (*a communication interface*). EX1006, ¶[0070] ("The gaming device 400 comprises…a communication port 420.").

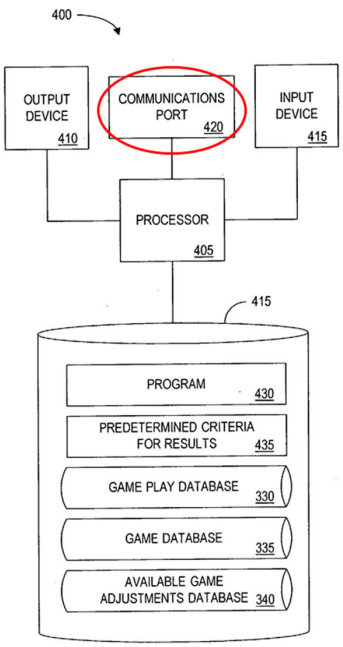


FIG. 4

Walker discloses that the communication port is *adapted to couple bi-directional communications between the one or more remote users utilizing electronic communication devices*. Using the communication port (*communication*

*interface*), remote players may use the gaming devices 210 (*one or more users utilizing communication devices*) to be in two-way communications with each other (*adapted to couple bi-directional communications*). EX1006, ¶[0051] ("The system 200…may include a controller 205 (an example of which is depicted in FIG. 3) in one or two-way communication with a plurality of gaming devices 210 (an example of which is depicted in FIG. 4) via a network such as, for example, the Internet or via another communications link.").

**8. [1.c]**

Walker discloses this limitation. Crevelt ¶212. Walker discloses a processor 305 (*a gaming processor*) that operates the Walker gaming system. EX1006, ¶[0065] ("The processor 305 performs instructions of the program 320, and thereby operates in accordance with the present invention, and particularly in accordance with the methods described in detail herein.").

"The controller 300 comprises a processor 305" and "[t]he processor 305 is in communication with…a memory 315" (*game processor coupled to memory*). EX1006, ¶[0064]. Because the processor performs instructions for the program, a POSITA would have understood that the controller uses the processor for *generating game play information*. Crevelt ¶212; EX1006, ¶[0146] ("Note that information stored in the embodiment of the game database illustrated in FIG. 7A may be calculated using information stored in the game tracking database 330. For example,

the controller 205 may access the game play database 230 to determine a set of scores achieved for a particular game. The controller may determine the standard deviation in scores and the mean score. The calculated standard deviation of the scores and the calculated mean of the scores may then be stored in the record of the game in the game database 335.”).

**9. [1.c.i]**

Walker in view of Schneier143 renders obvious this limitation. Crevelt ¶¶213-216. Walker discloses that the *game play information* provided by the processor includes *game play* with alternate currency including credits (*with virtual money (vCoins)*). EX1006, ¶[197] (“A player may pay ten electronic credits per game play of a game. Examples of alternate currencies include tickets, credits, points, Beenz, frequent flyer miles, and minutes of long distance phone time.”).

To the extent that Walker does not expressly disclose the use of credits during game play (*game play with virtual money*), this limitation was disclosed by Schneier143. Specifically, Schneier143 discloses credits that can be earned during game play. For example, Schneier143 discloses that “[t]he number of credits available may also be incremented after achieving a certain level of performance in the game.” EX1008, 63:23-25. In one example game, “scoring over a million points in DONKEY KONG might result in an extra credit being added to the available

credit balance." EX1008, 63:25-27; *see also* 63:27-29 ("Finding a secret room within a game might add five credits. Hitting a home run may earn ten credits.").

Schenier143 also discloses that the credits can be used to purchase items during game play. For example, Schneier143 discloses "[e]xtra credits can be required to complete restricted stages of a game" or "the player could be charged an additional credit for the use of a special weapon, access to a map of the dungeon, or hints on avoiding traps." EX1008, 63:12-19. Schneier143 also discloses how "[e]ach credit might also buy a certain number of lives." *Id.*, 63:37-38, 63:8-11.

A POSITA would have recognized that the use of virtual money during game play by Schneier143 would have been a natural extension of the credits in Walker. Crevelt ¶216. A POSITA would have been motivated to modify Walker to include the use of credits during game play as taught by Schneier143 because the use of credits during game play, not just to engage in game play, would have enhanced the user experience. Crevelt ¶¶188-190. For less skilled players, the ability to purchase items that advance the player to the next level would have prevented the player from becoming frustrated. For more advanced players, the ability to earn credit during game play would have made the game more interesting. Additionally, Walker and Schneier143 share the same inventors—namely Jay Walker and James Jorasch. A POSITA implementing and improving the system of Walker would have naturally

looked at other patents and applications of the inventors of Walker to identify any features or details that would have improved the system. Crevelt ¶189.

A POSITA would have had a reasonable likelihood of success in modifying the game system of Walker to implement the use of credits during game play as taught by Schneier143. Crevelt ¶¶191-193. Walker and Schneier143 have substantially similar structures and functions that even share the same names. Crevelt ¶192. Walker and Schenier143 even use credits in the same way, but with Schneier143 merely disclosing more detailed functionality. *Id*. A POSITA would have had a reasonable likelihood of success in modifying the game system of Walker to implement the use of credits during game play as taught by Schneier143 because it would have involved a combination of known technologies (processors, memory) according to known methods (programming) to yield the predictable result of adding more functionality to an object in the game—namely, credits. Crevelt ¶193.

**10. [1.c.ii]**

Walker discloses this limitation. Crevelt ¶217. As discussed for [1.a.ii], Walker discloses that the gaming system stores financial account information for each player (*payment information of the users*). *See* Section X.C.4. "[A] player may purchase an alternate currency…using money or some other form of consideration." EX1006, ¶[0197]. A POSITA would have understood that the player would purchase credits (*virtual money*) with the player's financial account information (*acquired in*

*response to a purchase utilizing the payment information of the users*). Crevelt ¶217; *see also* ¶¶ [0199]-[0204].

**11. [1.c.iii]**

Walker discloses this limitation. Crevelt ¶218. Walker discloses that "a player may pay $0.25 per game play of a game. In a second example, a player may pay ten electronic credits per game play of a game." EX1006, ¶[0197]. A POSITA would have understood that in the exemplary embodiment disclosed the electronic credits (*virtual money*) *acquired in response to a purchase* is *subject to a multiplier* of $0.25. Crevelt ¶218.

**12. [1.c.iv]**

Walker discloses this limitation. Crevelt ¶¶219-220. Walker discloses multiple ways of *implementing a first set of variable parameters to provide a first game play experience.* Crevelt ¶219. Using the *gaming structure*, the system implements game parameters providing *a first game play experience* that is less difficult. *Id*. For example, the number of lives may first be set to 5, the speed of the spaceship may be set at a certain variable, or the precision of the spaceship may be set at a certain level. EX1006, ¶¶[0155]-[0166], Figure 8.

Using the *prizing structure*, the system implements prize parameters providing *a first game play experience* where the user obtains less prizes or less

valuable prizes. Crevelt ¶220. For example, the system may set the score to obtain prize at a high score, or provide a lower monetary value prize. EX1006, ¶[0028].

**13. [1.c.v]**

Walker discloses this limitation. Crevelt ¶¶221-222. Walker discloses *modifying the variable parameters* (discussed in Section X.A.11) *to provide a second set of variable parameters providing a second game play experience.* Crevelt ¶221. Using the *gaming structure*, Walker discloses modifying the first set of *variable parameters* to provide a more difficult game play (*a second set of variable parameters providing a second game play experience*). For example, the number of lives may be modified from 5 to 3, the speed of the spaceship may be modified to increase by 10-20%, and the precision required by the spaceship controls may be increased by 2%. EX1006, Figure 8. Walker discloses that *the first game play experience differs from the second game play experience* because the second game play experience is more difficult than the first game play experience (e.g., less lives, speed of spaceship is faster and therefore less time to react, more precision required to control the spaceship). *Id.*; Crevelt ¶221.

Using the *prizing structure*, Walker discloses modifying the first set of *variable parameters* to obtain a different set of prizes (*a second set of variable parameters providing a second game play experience*). Crevelt ¶222. For example,

the system may modify the score to achieve a prize to a lower score or provide a higher monetary value prize. EX1006, ¶[0028].

**14. [1.d]**

Walker discloses this limitation. Crevelt ¶223. As discussed for [1.a.i], Walker discloses that the controller's memory (*memory*) stores multiple databases, including a player database. *See* Section X.C.3; *see also* EX1006, ¶[0067]. Walker explains that the player database may include player account information (*memory storing account information which varies through game play*). EX1006, ¶[0098] ("The fields [of player database 325] specify: (i) a player identifier 505; (ii) a player name 510;…and <u>(v) a skill level</u> 525."), Figure 5.

500

| PLAYER IDENTIFIER 505 | PLAYER NAME 510 | PLAYER CONTACT INFORMATION 515 | FINANCIAL ACCOUNT IDENTIFIER 520 | SKILL LEVEL 525 |
|---|---|---|---|---|
| P-90,327,942 | JOHN BLACK | JBLACK@AOL.COM | 1111-2222-3333-4444 | EXPERT |
| P-77,561,218 | MARY BROWN | (555) 555-5555 | -- | BEGINNER |
| P-01,398,419 | BOB BLUE | 100 MAIN ST. SMALL TOWN , USA | 609 7128 421 | UNDETERMINED |
| P-72,103,022 | ALICE GREEN | AG@MSN.COM; (666) 666-6666 | 72103022 | AVERAGE |

FIG. 5

EX1006, FIG. 5

The player's account information includes a player's skill level, which may be a value representing that player's average score or average prize value obtained in a particular game. *Id.*, ¶[0103] ("Note further that information other than the categories depicted in FIG. 5 may be stored in the skill level field as an indication of a player's level of skill. For example, an average score or an average value of a prize obtained by the player (e.g., in a particular game) may be stored as an indication of

the player's level of skill in that game."). A POSITA would have understood that the player's average score may change during game play, and consequently, a player's skill level may change as a player plays more games (*account information which varies through game play*). Crevelt ¶223.

**15. [1.e]**

Walker discloses this limitation. Crevelt ¶224; EX1001, 45:34-39. A POSITA would have understood that Walker discloses a software module for calculating statistics related to the game play (*a decision engine for performing game analytics on the game play*). Crevelt ¶224. This statistical information includes the "number of times the player has played" (EX1006, 25:23-24), "the time the player took to play a game, the number of times a player has participated in similar previous tournaments, and the like" (EX1006, 32:27-33), "the number of games played and the number of times the specific prize goal was hit" (EX1005, 40:33-45), and "the amount of times a particular game is played, the number of times that difference games are played, or by achieving a game-related goal" (EX1006, 56:49-51) (*determine the selection of the first or second programmable variable parameters utilizing the recorded game play information with predefined criteria*.)

**16. [1.f]**

Walker discloses this limitation. Crevelt ¶¶225-226. Walker discloses that the controller may award prizes to players as a result of game play (*a prizing system to*

*award a win to the one or more remote users*). Crevelt ¶225; EX1006, ¶[0223] ("[T]he controller 205 may provide one or more prizes to a player as a result of game play."); ¶[0026] ("A 'result' of a game, as used herein unless expressly stated otherwise, comprises an expression of a player's performance in a game play of a game….[a] binary indication of whether a player won a prize (e.g., "yes" or "no") during a game play is a result of the game play.").

Walker explains that whether prizes are awarded may be determined by various prize parameters (*determined by a prizing structure*). For example, Walker defines a "formula [that] may be used to convert points to credits, money or some other currency used to purchase prizes." *Id.*, ¶[0229]. Walker also describes prize structures in which "a first prize corresponds to a first range of scores that a player may achieve in one or more plays of the game (e.g., a score of 500-1000 points) while a second prize corresponds to a second range of scores that a player may achieve in one or more game plays of the game (e.g., 1001-1500 points)." *Id.*, ¶[0265].

### D. Dependent Claims 2, 4, 7, 11, 15, and 19

#### 1. Claim 2

Walker discloses this limitation. Crevelt ¶¶227-228. Walker discloses that the controller may award prizes to players to as a result of game play (*predefined criteria includes game structure*). Crevelt ¶227; EX1006, ¶[0223] ("[T]he controller 205

may provide one or more prizes to a player as a result of game play."); ¶[0026] ("A 'result' of a game, as used herein unless expressly stated otherwise, comprises an expression of a player's performance in a game play of a game….[a] binary indication of whether a player won a prize (e.g., "yes" or "no") during a game play is a result of the game play.").

Walker explains that whether prizes are awarded may be determined by various prize parameters (*predefined criteria*). For example, Walker defines a "formula [that] may be used to convert points to credits, money or some other currency used to purchase prizes." *Id.*, ¶[0229]. Walker also describes *game structures* in which "a first prize corresponds to a first range of scores that a player may achieve in one or more plays of the game (e.g., a score of 500-1000 points) while a second prize corresponds to a second range of scores that a player may achieve in one or more game plays of the game (e.g., 1001-1500 points)." *Id.*, ¶[0265].

**2. Claim 4**

Walker discloses this limitation. Crevelt ¶229. Walker explains that the game play database may store information pertaining to certain "lives," "rounds," or "levels" (*the server further includes player's club information*). EX1006, ¶¶[0027] ("A game play comprises an attempt to obtain a score or win a prize in accordance with the rules of the game and ends at a designated time (e.g., once the prize is won

or **a number of 'lives' or 'rounds' is played** without having won the prize)."), [0160] (discussing game parameters such as "factors that affect the duration of a game (e.g., **a number of rounds, a number of lives**)"), [0163] (discussing game parameters such as "algorithms that control how points are awarded (e.g., a formula for the number of bonus points that a player receives at the[] end of **a round of a game play** or at the end of a game play)"), [0245] (discussing "**number of levels** completed"), [0265] (discussing awarding of a prize "if a player achieves a particular…**level of achievement** in one or more game plays of a game (e.g., the player gets to **level 3 of the game** within two consecutive game plays)"); *see also id.*, ¶[0109] ("A game play database 330 stores information about individual game plays conducted on gaming devices of system 200."). A POSITA would have understood that the server collected information regarding the player including the player's club information (*the server further includes player's club information*). Crevelt ¶229.

**3. Claim 6**

Walker alone or in view of the knowledge of a POSITA renders obvious this limitation. Crevelt ¶¶230-232.

As discussed for claim 2, a player's frequent gamer account (*player's club information*) may be used to identify a player in the player database. *See* Section X.D.1; EX1006, ¶¶[0098], [0100]. Walker further discloses that the player's account

in the player database may include the number of points a player has won through game play (*wherein the player's club information includes information on non-cash amounts*). EX1006, ¶[0231] ("[A] player may win 3400 points in a game play of a game and these points may be credited to his account in a player database stored by the controller 205 (e.g., the player database 325).").

To the extent Walker does not explicitly disclose that a player's point total is connected to the player's frequent gamer account, a POSITA would have found it obvious to implement this feature. Crevelt ¶232. A POSITA would have understood that it would have been beneficial to implement a frequent gamer account such that the frequent gamer's identifier is directly associated with all cash balances, point balances (*non-cash amounts*), or other monetary or non-monetary values that serve as a player's credits for prizes or further game play because it would have improved the gaming experience for frequent gamers by allowing the gamer to easily access monetary and non-monetary account balances using the frequent gamer identifier. *Id*. Moreover, such an implementation would have provided an easy way to track frequent gamer status by tracking metrics associated with gaming frequency in connection with the frequent gamer identifier. *Id.* A POSITA would have also had a reasonable expectation of success in implementing this modification because it would have involved modifying Walker in a manner Walker suggests—using

disclosed player account types (i.e., frequent gamer account) to track disclosed types of player information (i.e., point balances). *Id.*

**4. Claim 7**

Walker discloses this limitation. Crevelt ¶233. As discussed for limitations [1.c.iv-v] (*see* Sections X.C.11-12), Walker discloses selecting a set of results from all game plays (i.e., from all users/devices) (*game play information across multiple users devices*) during a specific period of time (EX1006, ¶[0236]), evaluating whether the variance or standard deviation of those results is within a predetermined range or meets a predetermined threshold (*id.*, ¶[0249]), and adjusting game parameters (*wherein the first set and second set of variable parameters are set*) based on that evaluation (*id.*, ¶[0267]). A POSITA would have understood that calculating a variance or standard deviation of the selected set of results, which is performed when evaluating whether a game parameter adjustment must be made (*wherein the first set and second set of variable parameters are set*), involves a comparison of the selected results (*based on a comparison of game play information across multiple users*) since variance and standard deviation are both measures of comparison within a data set to determine the amount of variation of values about a mean. Crevelt ¶233; EX1006, ¶¶[0251]-[0258] (formulas for calculating variance and standard deviation both require subtracting the mean/average of all elements in the set from each current element).

### 5. Claim 11

Walker discloses this limitation. Crevelt ¶234. Walker discloses that the game play database tracks results of users' game plays (*wherein the game play information includes information tracking the users play*) for further evaluation in determining whether results satisfy predetermined criteria. EX1006, ¶[0109] ("The game play database 330 may be used, for example, to **track results of game plays** for use in determining whether a range of results for a particular game satisfy one or more predetermined criteria.").

### 6. Claim 15

Walker discloses this limitation. Crevelt ¶¶235-236. Walker discloses that prizes include not only money, but also any form of consideration such as products or services (*non-cash prizes*). EX1006, ¶[0223] ("In one or more embodiments, the controller 205 may provide one or more prizes to a player as a result of a game play. A prize may be any form of consideration, including currencies (e.g., money), products and services."). As discussed for limitation [1.a.iii], Walker discloses tracking one or more predetermined criteria (*prizing structures*) which represent statistics or measures achieved by the system as a whole, and adjusting one or more parameters (*modifying awarding of non-cash prizes*) in order to meet those predetermined conditions. *See* Section X.C.5.

For example, Walker discloses parameters such as "number of lives" which affect the result of a game, e.g., the prizing structure that determines which prize is awarded for game play. EX1006, ¶[0028] ("A parameter of a game comprises a rule of the game that has an associated value and affects the result of a game play of the game (e.g., what prize is awarded for a game play of the game)….For example, [for] a game named 'Space Battles'…parameters of the game include (i) a number of lives, (ii) spaceship speed, and (iii) meteorize size."). Walker explains that these parameters may be adjusted, thereby impacting the prizing structure (*wherein the prizing structure is modified by modifying awarding of…prizes*), in order to meet a predetermined threshold value such as a variance of results. *Id.*, ¶[0028] ("A parameter of a game may be adjusted by adjusting the value associated with the parameter. For example, a game named 'Space Battles' may have a variance in results of the game that is too high….[T]he number of lives may be adjusted from a first value to a second value….[A]djusting this parameter of the number of lives from a first number to a second number that is higher than the first number may result in an adjustment in the variance of results since this adjustment may be particularly effective at increasing the possibility that a novice or low skill player will win a prize or achieve a high score."); *see also id.*, ¶[0025] ("[A] computing device may monitor the games played to determine a variance in prizes awarded based on results of the games….If the computing device determines that the variance

in prizes for a game is too high or too low, then it may modify the game to alleviate this problem."). Since Walker discloses that prizes encompass products and services (*non-cash prizes*), Walker thus discloses *wherein the prizing structure is modified by modifying awarding of non-cash prizes*.

#### 7. Claim 19

Walker discloses this limitation. Crevelt ¶237. As discussed for limitations [1.c.iv-v] and [1.e], the controller performs actions such as deciding which sets of game play information should be selected for analysis, analyzing the results to calculate variance, standard deviation, or other analytical measures, and comparing these values to predetermined thresholds to decide whether game parameters should be adjusted (*decision engine for game analytics*). Sections X.C.12-13, X.C.15. Walker further discloses that the selected set of results may comprise "all game plays played by a particular player" (*decision engine for game analytics tracks user specific play*). *Id.*, ¶[0237].

## XI. SECONDARY CONSIDERATIONS

There are no secondary considerations known to Petitioner that affect, let alone overcome, this strong case of obviousness. Should PO proffer any relevant evidence of secondary considerations, Petitioner reserves its rights to address.

## XII. THE BOARD SHOULD REACH THE MERITS

### A. Institution is appropriate under § 325(d)

Institution is appropriate under § 325(d) because substantially the same art and arguments have never been presented to or considered by the Office. *Advanced Bionics, LLC v. MED-EL Elektromedizinishche Geräte GmBH*, IPR2019-01469, Paper 6 at 6-11 (Feb. 13, 2020) (precedential). Specifically, Kelly683, Walker, Paulsen, and Schneier143 were not considered during prosecution, and therefore, these combinations were never before the Office.

### B. Institution is appropriate under § 314(a)

In the parallel litigation, there is no trial scheduled and the case is currently stayed. Thus, *Apple Inc. v. Fintiv, Inc.*, IPR2020-00019, Paper 11 (Mar. 11, 2020) (precedential) is inapplicable. Should PO seek denial under *Fintiv*, Petitioner will seek permission to reply to address the facts and law as they stand at the time.

## XIII. CONCLUSION

For these reasons, Petitioner respectfully requests institution.

Dated : March 25, 2025

Respectfully submitted,

By: / Lisa K. Nguyen /
Lisa K. Nguyen (Reg. No. 58,018)
**PAUL HASTINGS LLP**
1117 S. California Avenue
Palo Alto, CA 94304
Telephone: 650-320-1800
lisanguyen@paulhastings.com

*Counsel for Petitioner*
**ACTIVISION BLIZZARD, INC.**

## CLAIM LISTING APPENDIX

Claims 1, 2, 4, 6, 7, 11, 15, and 19

1. A system for electronic game play involving one or more remote users of a system in an electronic environment, the remote users utilizing electronic communication devices having display capabilities, the electronic communication devices having input capability and generate an output corresponding to the input, the electronic communication devices having storage to store information from a remote source, comprising:

[a] a server including memory to process and store:

> [1.a.i] registration user information of the remote users,
>
> [1.a.ii] game play information regarding particular game play events,
>
> [1.a.iii] payment information of the remote users, and
>
> [1.a.iv] mandated and variable parameters for use in the course of game play, wherein the mandated parameters represent parameters which must be achieved by the system as a whole, and the variable parameters represent parameters characterizing at least one of: a game structure and a prizing structure,

[1.b] a communication interface adapted to couple bi-directional communications between the one or more remote users utilizing electronic communication devices,

[1.c] a game processor coupled to memory generating game play information, the game processor providing at least:

> [1.c.i] the game play information including game play with virtual money (vCoins),
>
> [1.c.ii] the virtual money (vCoins) being acquired in response to a purchase utilizing the payment information of the users,
>
> [1.c.iii] the virtual money (vCoins) acquired in response to a purchase being subject to a multiplier,
>
> [1.c.iv] implementing a first variable parameters to provide a first game

play experience, and

[1.c.v] modifying the variable parameters to provide second variable parameters providing a second game play experience, where the first game play experience differs from the second game play experience,

[1.d] memory storing account information which varies through game play,

[1.e] a decision engine for performing game analytics on the game play and determine the selection of the first or second programmable variable parameters utilizing the recorded game play information with predefined criteria, and

[1.f] a prizing system to award a win to the one or more remote users determined by a prizing structure.

2. The system for electronic game play involving one or more remote users of a system in an electronic environment of claim 1 wherein the predefined criteria includes game structure.

4. The system for electronic game play involving one or more remote users of a system in an electronic environment of claim 1 wherein the server further includes player's club information.

6. The system for electronic game play of claim 4 wherein the player's club information includes information on non-cash amounts.

7. The system for electronic game play of claim 1 wherein the first and second variable parameters utilize game play information across multiple users devices.

11. The system for electronic game play of claim 1 wherein the game play information includes information tracking the users play.

15. The system for electronic game play of claim 1 wherein the prizing structure is modified by modifying awarding of non-cash prizes.

19. The system for electronic game play of claim 1 wherein the decision engine for game analytics tracks user specific play.

## CERTIFICATE OF COMPLIANCE

Pursuant to 37 C.F.R. § 42.24(d), the undersigned certifies that foregoing **PETITION FOR INTER PARTES REVIEW OF U.S. PATENT NO. 11,501,607** exclusive of the parts exempted as provided in 37 C.F.R. §42.24(a), contains 13,856 words and therefore complies with the type-volume limitations of 37 C.F.R. §42.24(a).

Dated: March 26, 2025

Respectfully submitted,

By: / Lisa K. Nguyen /
Lisa K. Nguyen (Reg. No. 58,018)
**PAUL HASTINGS LLP**
1117 S. California Avenue
Palo Alto, CA 94304
Telephone: 650-320-1800
lisanguyen@paulhastings.com

*Counsel for Petitioner*
**ACTIVISION BLIZZARD, INC.**

## CERTIFICATE OF SERVICE

I hereby certify that a true and correct copy of the foregoing **PETITION FOR *INTER PARTES* REVIEW OF U.S. PATENT NO. 11,501,607 AND EXHIBITS EX1001-1026** are being served on March 26, 2025 via Federal Express overnight mail on counsel of record for U.S. Patent No. 11,501,607 as addressed below:

**David B. Murphy IP Law**
303 Orchid Ave.
Corona del Mar, CA 92625-3015

A courtesy copy is also being served on counsel for the patent holder in the pending litigation on March 26, 2025:

Matthew D. Powers
William P. Nelson
TENSEGRITY LAW GROUP, LLP
555 Twin Dolphin Drive, Suite 650
Redwood Shores, CA 94065
matthew.powers@tensegritylawgroup.com
william.nelson@tensegritylawgroup.com

Dated: March 26, 2025

Respectfully submitted,

By: / Lisa K. Nguyen /
Lisa K. Nguyen (Reg. No. 58,018)
**PAUL HASTINGS LLP**
1117 S. California Avenue
Palo Alto, CA 94304
Telephone: 650-320-1800
lisanguyen@paulhastings.com

*Counsel for Petitioner*
**ACTIVISION BLIZZARD, INC.**