US005816918A

United States Patent [19]

Kelly et al.

[11] **Patent Number: 5,816,918**

[45] **Date of Patent: Oct. 6, 1998**

[54] **PRIZE REDEMPTION SYSTEM FOR GAMES**

[75] Inventors: **Matthew F. Kelly**, San Ramon; **Bryan M. Kelly**, Almo; **Norman B. Petermeier**, Pleasanton; **John G. Kroeckel**, San Leandro; **John E. Link**, Tracy, all of Calif.

[73] Assignee: **RLT Acquistion, Inc.**, Pleasanton, Calif.

[21] Appl. No.: **746,755**

[22] Filed: **Nov. 14, 1996**

Related U.S. Application Data

[63] Continuation-in-part of Ser. No. 628,490, Apr. 5, 1996.

[51] **Int. Cl.**[6] **A63F 9/24**

[52] **U.S. Cl.** **463/16**

[58] **Field of Search** 463/1, 16, 23, 463/36, 37, 30; 273/138.1, 139, 440

[56] **References Cited**

U.S. PATENT DOCUMENTS

941,194	11/1909	Hamilton .	
1,543,318	6/1925	Cardoza .	
1,652,071	12/1927	Tsujing .	
2,043,166	6/1936	Hart et al.	273/138
2,141,580	12/1938	White	273/95
2,660,434	11/1953	Durant	273/121
2,799,500	7/1957	Zekowski	273/1
2,926,915	3/1960	Johns	273/95
3,796,433	3/1974	Fraley et al.	273/138 A
3,975,022	8/1976	Figuero	273/141 A
4,191,376	3/1980	Goldman et al.	273/139
4,240,635	12/1980	Brown	273/138 A
4,398,708	8/1983	Goldman et al.	270/18
4,494,197	1/1985	Troy et al.	364/412
4,582,324	4/1986	Koza et al.	463/16
4,586,707	5/1986	McNeight et al.	273/1 R
4,636,951	1/1987	Harlick	364/412
4,652,998	3/1987	Koza et al.	364/412
4,743,024	5/1988	Helm et al.	273/143 R
4,837,728	6/1989	Barrier et al.	364/412
4,842,278	6/1989	Markowicz	273/138 A
4,854,590	8/1989	Jolliff et al.	273/138 A
4,948,133	8/1990	Helm et al.	273/85 G
4,964,638	10/1990	Ishida	273/138 A
5,007,649	4/1991	Richardson	273/237
5,016,880	5/1991	Berge	273/138 A
5,034,807	7/1991	Von Kohorn	358/84
5,042,809	8/1991	Richardson	273/138 A
5,042,810	8/1991	Williams	273/142
5,048,833	9/1991	Lamle	273/138 A
5,057,915	10/1991	Von Kohorn	358/84
5,083,271	1/1992	Thacher et al.	364/411

(List continued on next page.)

FOREIGN PATENT DOCUMENTS

1087361 10/1967 United Kingdom .

Primary Examiner—George Manuel
Attorney, Agent, or Firm—Hickman Beyer & Weaver,LLP

[57] **ABSTRACT**

The present invention provides a prize redemption system for use with one or more game apparatuses. A game is provided on a game apparatus for a player to play in exchange for monetary input, and prize credits are credited to the player based on the game outcome. A prize selection menu is then displayed by the game apparatus, the menu including one or more prizes, where the player may select a prize that has a prize cost within the player's prize credit amount. The player is dispensed a specific prize ticket that is redeemable for the selected prize. The game apparatus can also provide specific prizes and tournament games played for a tournament prize contributed to by multiple players. An operator can adjust prizes and payout percentages of the system to achieve a desired profitability for game apparatuses. Prize input is entered into a prize table describing multiple available prizes and also describing payout information that indicates a desired amount of payout that the operator wishes to provide back to players of the game apparatus in terms of the value of the prizes. Prize information, such as prize costs and specific prize win ratios, is automatically determined by the system for each of the prizes in view of the desired profitability of the game apparatus.

77 Claims, 18 Drawing Sheets

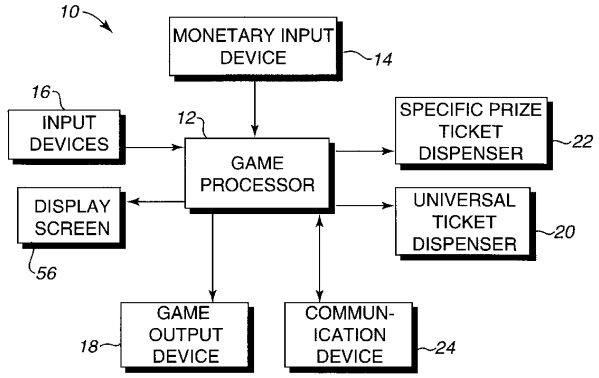

U.S. PATENT DOCUMENTS

5,116,055	5/1992	Tracy	273/138 A
5,118,109	6/1992	Gumina	273/139
5,137,278	8/1992	Schilling et al.	273/118 A
5,184,821	2/1993	Korenek	273/138 A
5,197,094	3/1993	Tillery et al.	463/25
5,227,874	7/1993	Von Kohorn	358/84
5,249,800	10/1993	Hilgendorf et al.	273/138 A
5,265,877	11/1993	Boylan et al.	273/139
5,280,909	1/1994	Tracy	273/138 A
5,286,023	2/1994	Wood	273/138 A
5,286,061	2/1994	Behm	283/95
5,292,127	3/1994	Kelly et al.	273/138 R
5,318,298	6/1994	Kelly et al.	273/122 R
5,324,035	6/1994	Morris et al.	273/138 A
5,326,104	7/1994	Pease et al.	273/138 A
5,342,049	8/1994	Wichinsky et al.	273/119 A
5,344,144	9/1994	Canon	273/138 A
5,351,970	10/1994	Fioretti	273/439
5,359,510	10/1994	Sabalianskas	364/410
5,365,575	11/1994	Katz	379/92
5,417,424	5/1995	Snowden et al.	273/138 A
5,429,361	7/1995	Raven et al.	273/138 A
5,462,275	10/1995	Lowe et al.	273/94
5,471,039	11/1995	Irwin, Jr. et al.	235/441
5,472,196	12/1995	Rusnak	273/138 R
5,475,205	12/1995	Behm et al.	235/375
5,476,259	12/1995	Weingardt	273/85 CP
5,494,294	2/1996	Cappetta	273/269
5,511,794	4/1996	Katamoto	273/440
5,551,692	9/1996	Pettit et al.	273/143 R
5,593,349	1/1997	Migue et al.	463/1

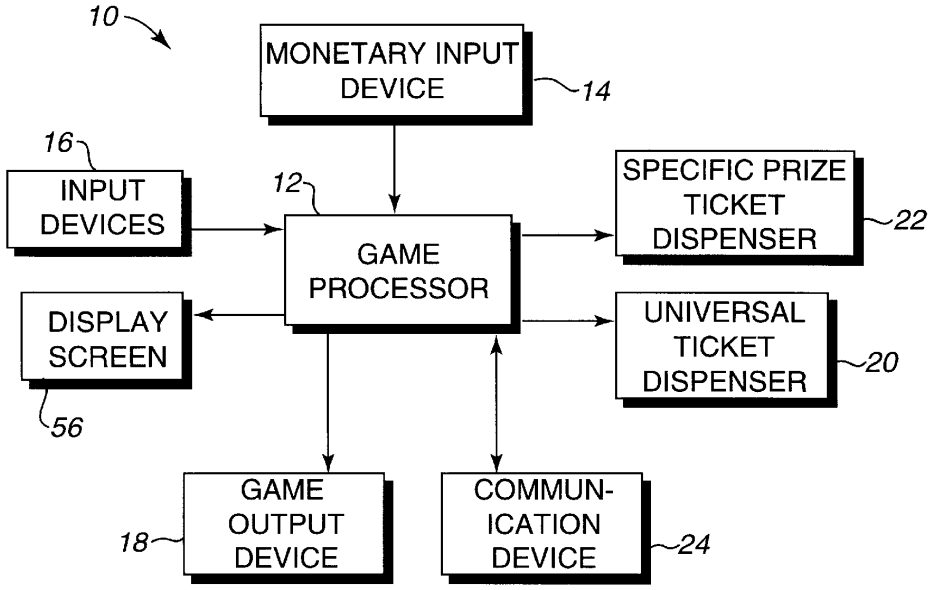

Figure 1

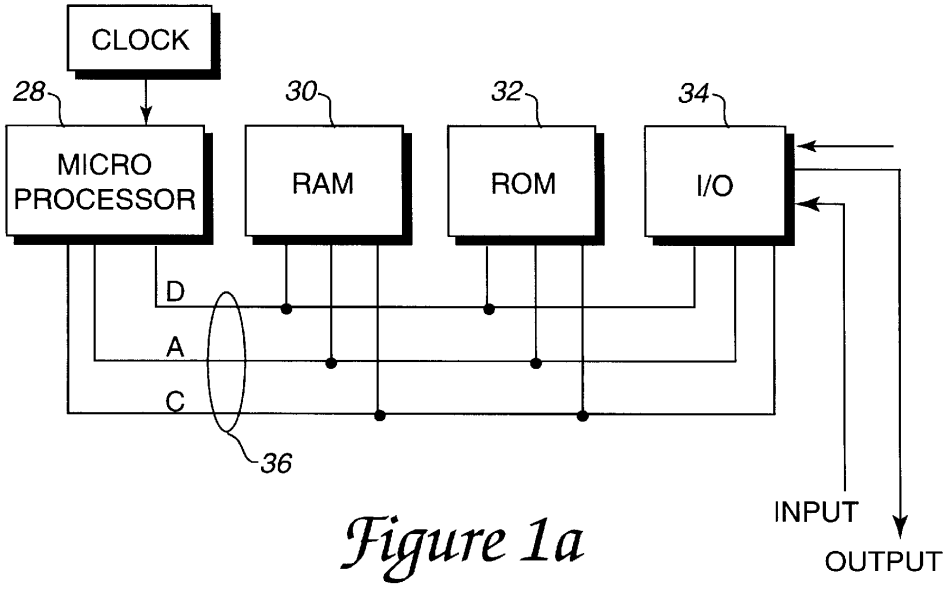

Figure 1a

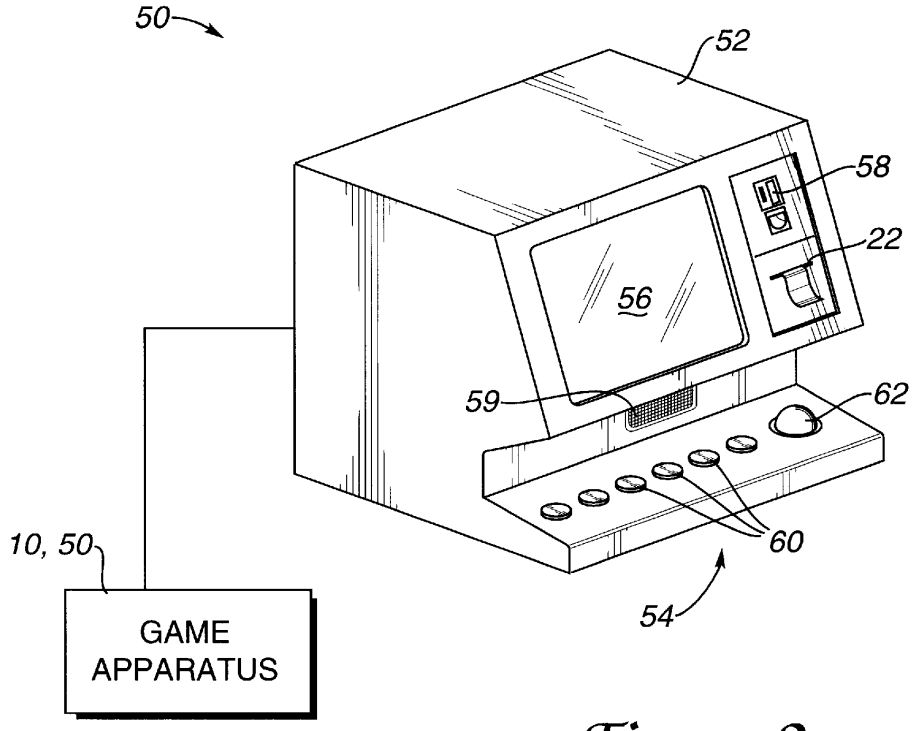

Figure 2

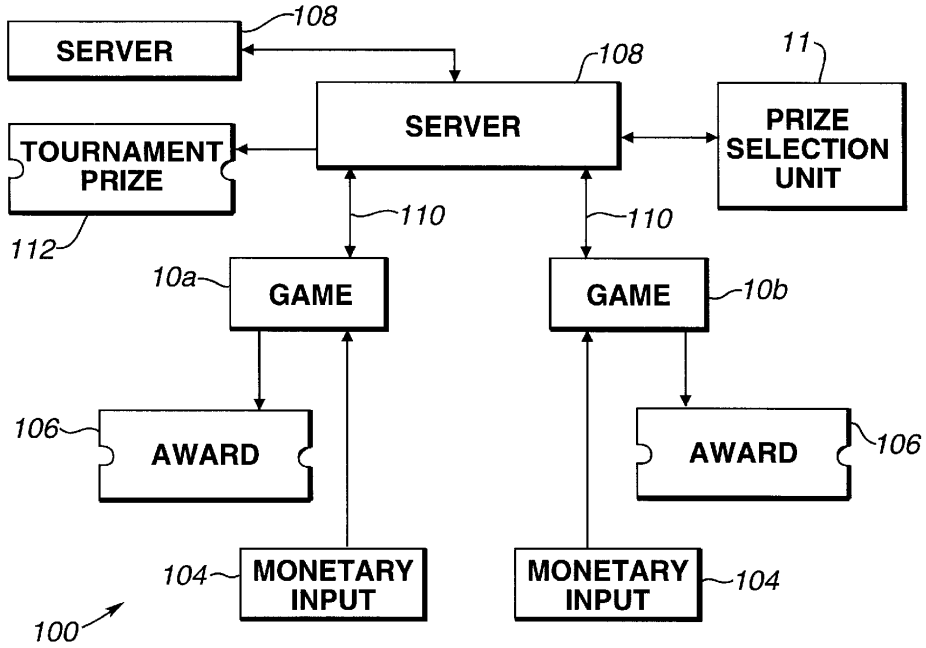

Figure 3

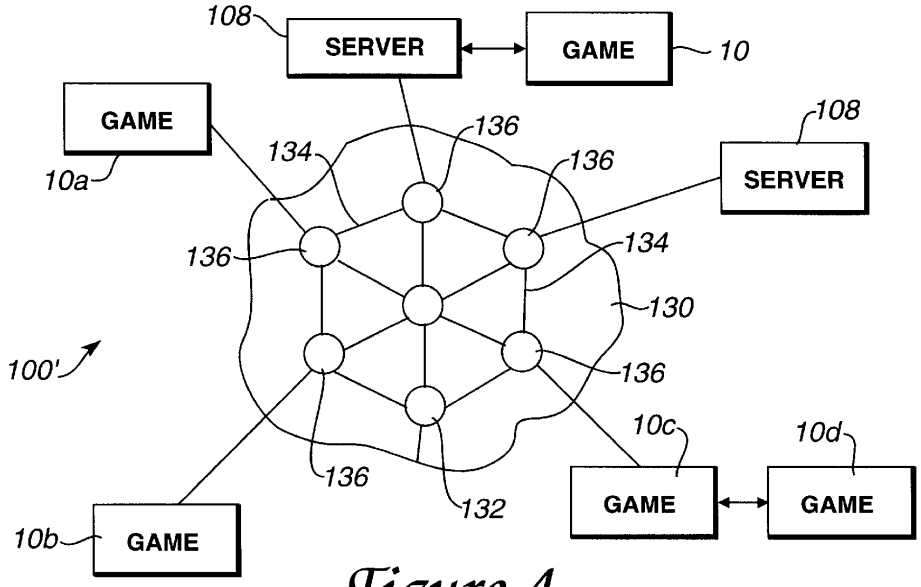

Figure 4

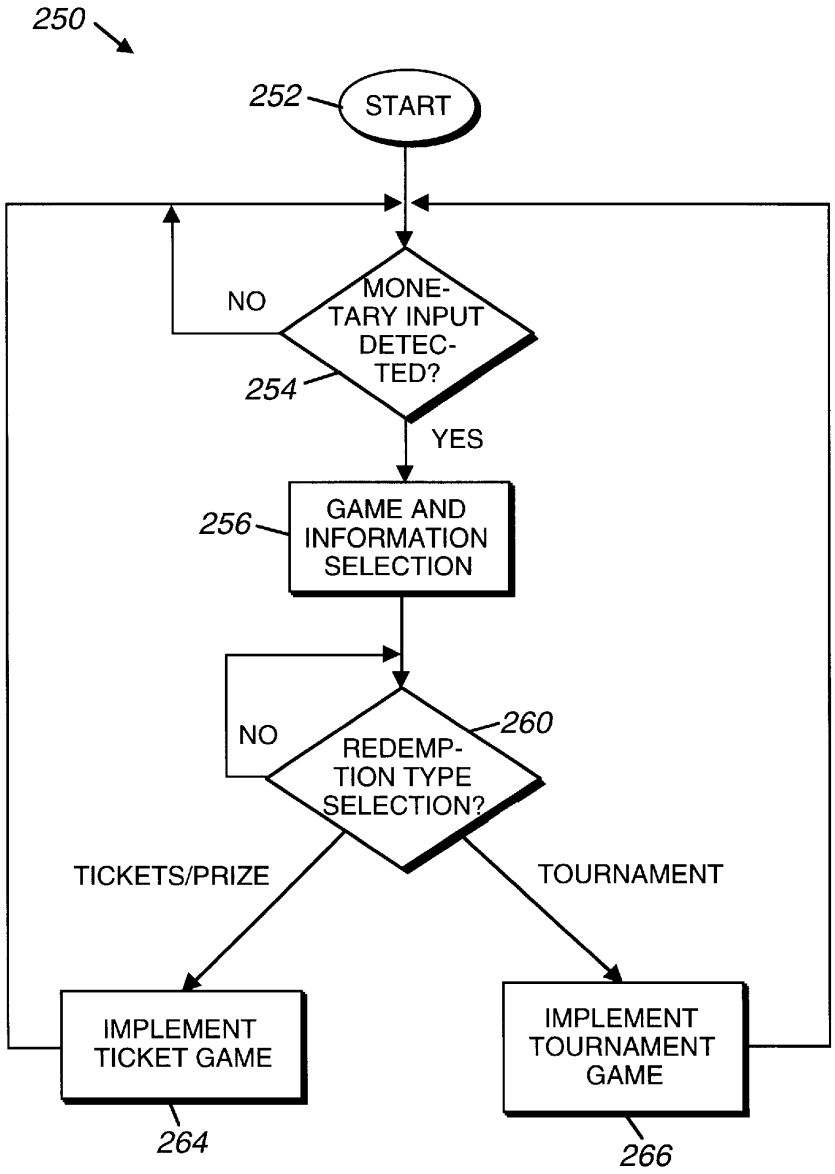
250
252
START
NO
MONE-
TARY INPUT
DETEC-
TED?
254
YES
256
GAME AND
INFORMATION
SELECTION
NO
260
REDEMP-
TION TYPE
SELECTION?
TICKETS/PRIZE
TOURNAMENT
IMPLEMENT
TICKET GAME
IMPLEMENT
TOURNAMENT
GAME
264
266

Figure 5

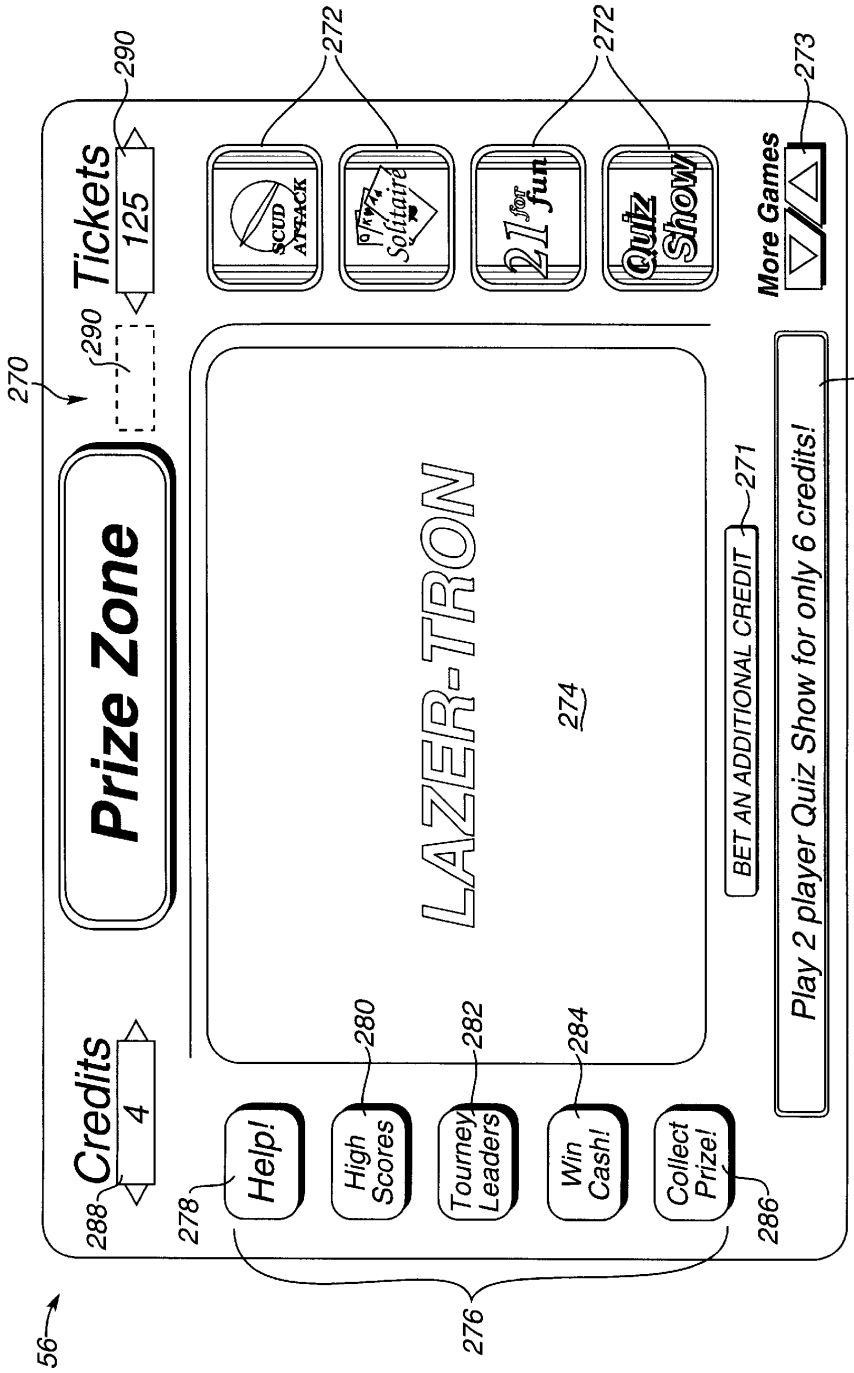
Tickets
125
290
270
Prize Zone
Credits
4
288
Help!
278
High Scores
280
Tourney Leaders
282
Win Cash!
284
Collect Prize!
286
276
56
LAZER-TRON
274
BET AN ADDITIONAL CREDIT
271
Play 2 player Quiz Show for only 6 credits!
292
SCUD ATTACK
Solitaire
21 for fun
Quiz Show
More Games
272
273

Figure 5a

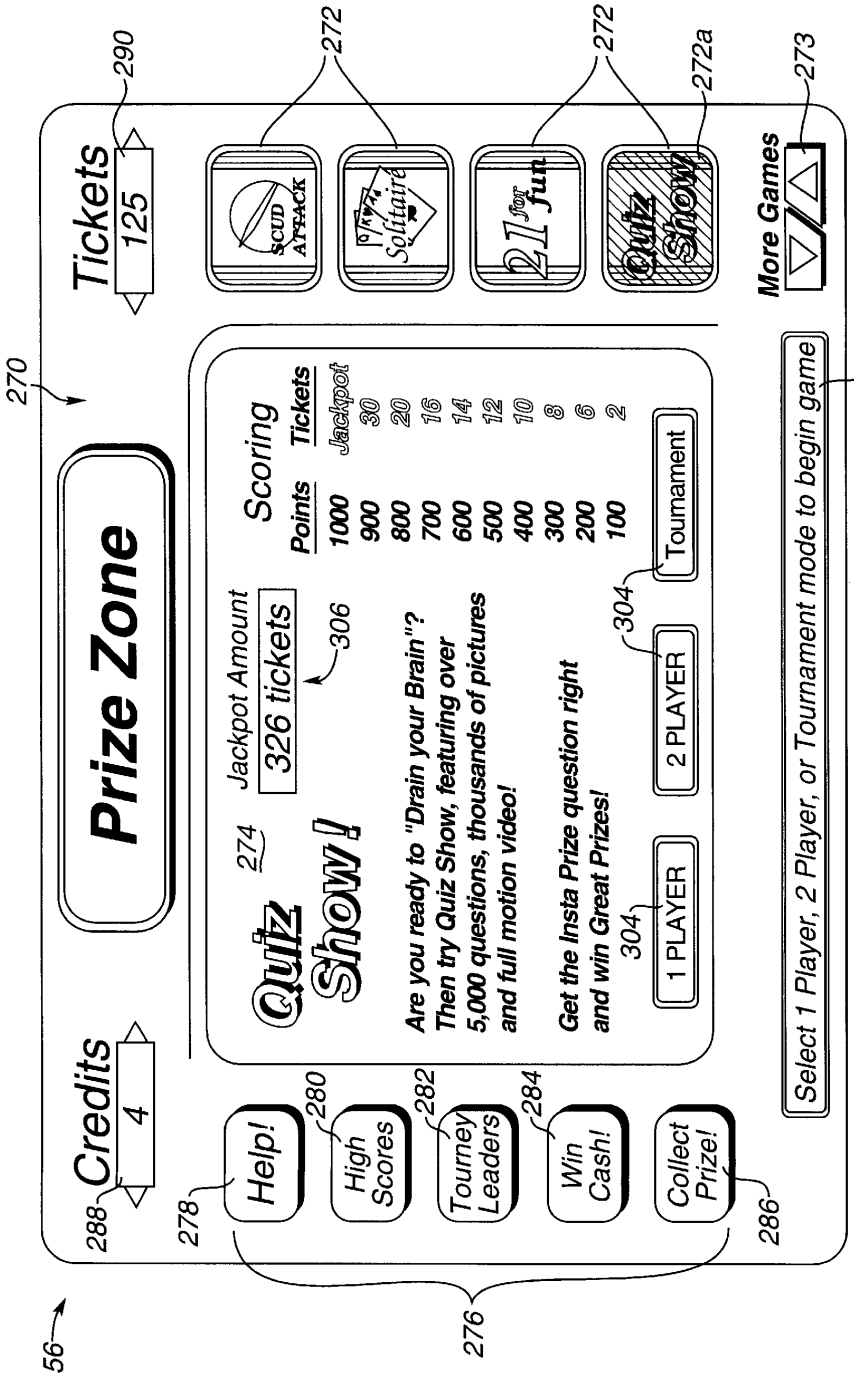
Prize Zone
Credits
4
Tickets
125
Quiz Show!
Jackpot Amount
326 tickets
Scoring
Points Tickets
1000 Jackpot
900 30
800 20
700 16
600 14
500 12
400 10
300 8
200 6
100 2
Are you ready to "Drain your Brain"?
Then try Quiz Show, featuring over
5,000 questions, thousands of pictures
and full motion video!
Get the Insta Prize question right
and win Great Prizes!
1 PLAYER
2 PLAYER
Tournament
Help!
High Scores
Tourney Leaders
Win Cash!
Collect Prize!
SCUD ATTACK
Solitaire
21 for fun
Quiz Show
More Games
Select 1 Player, 2 Player, or Tournament mode to begin game
56
270
272
272a
273
274
276
278
280
282
284
286
288
290
292
304
306

Figure 5b

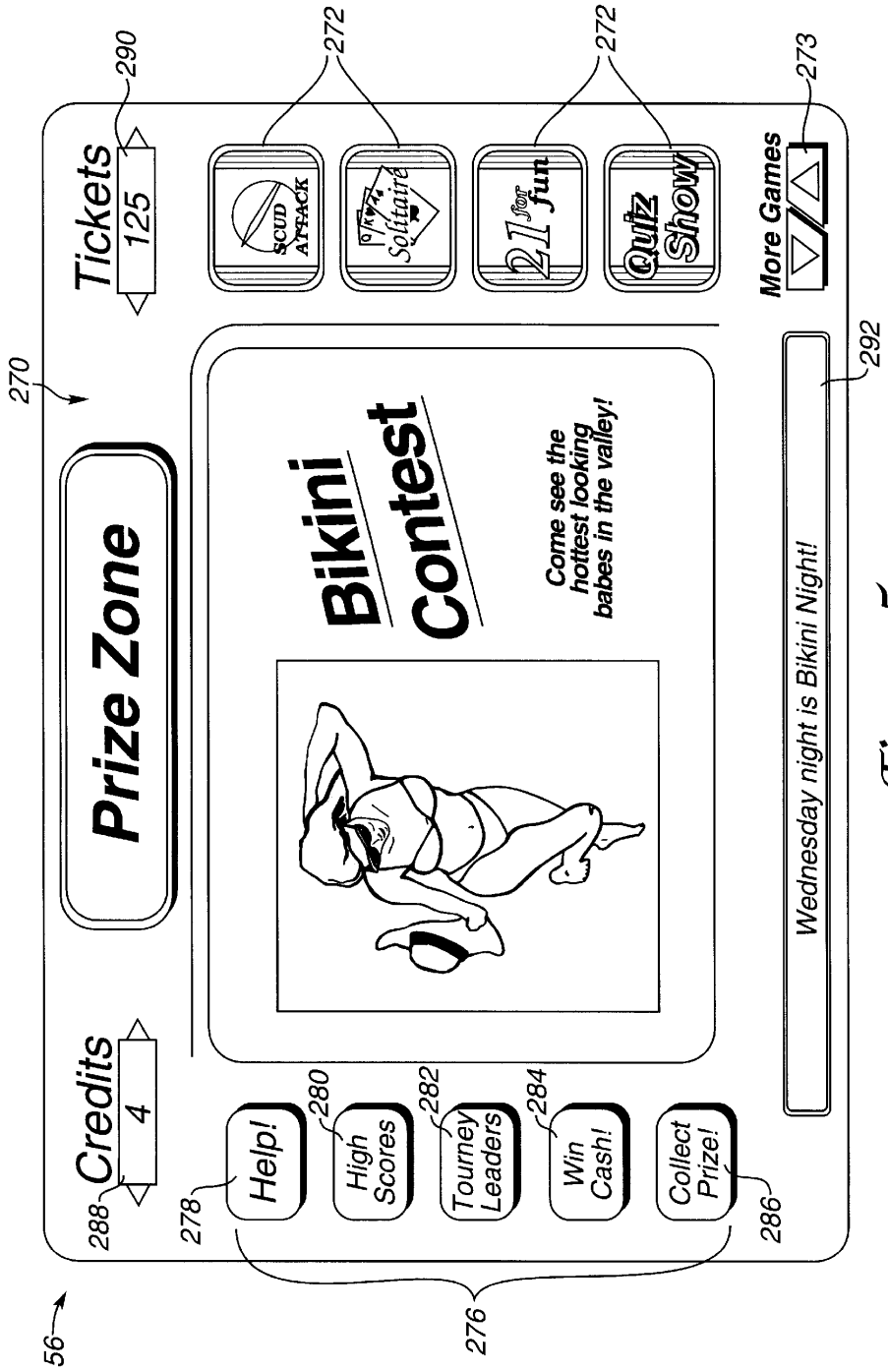
Tickets
125
290
272
272
273
SCUD ATTACK
Solitaire
21 for fun
Quiz Show
More Games
270
Prize Zone
Bikini Contest
Come see the hottest looking babes in the valley!
292
Wednesday night is Bikini Night!
Credits
4
288
278
Help!
280
High Scores
282
Tourney Leaders
284
Win Cash!
Collect Prize!
286
276
56

Figure 5c

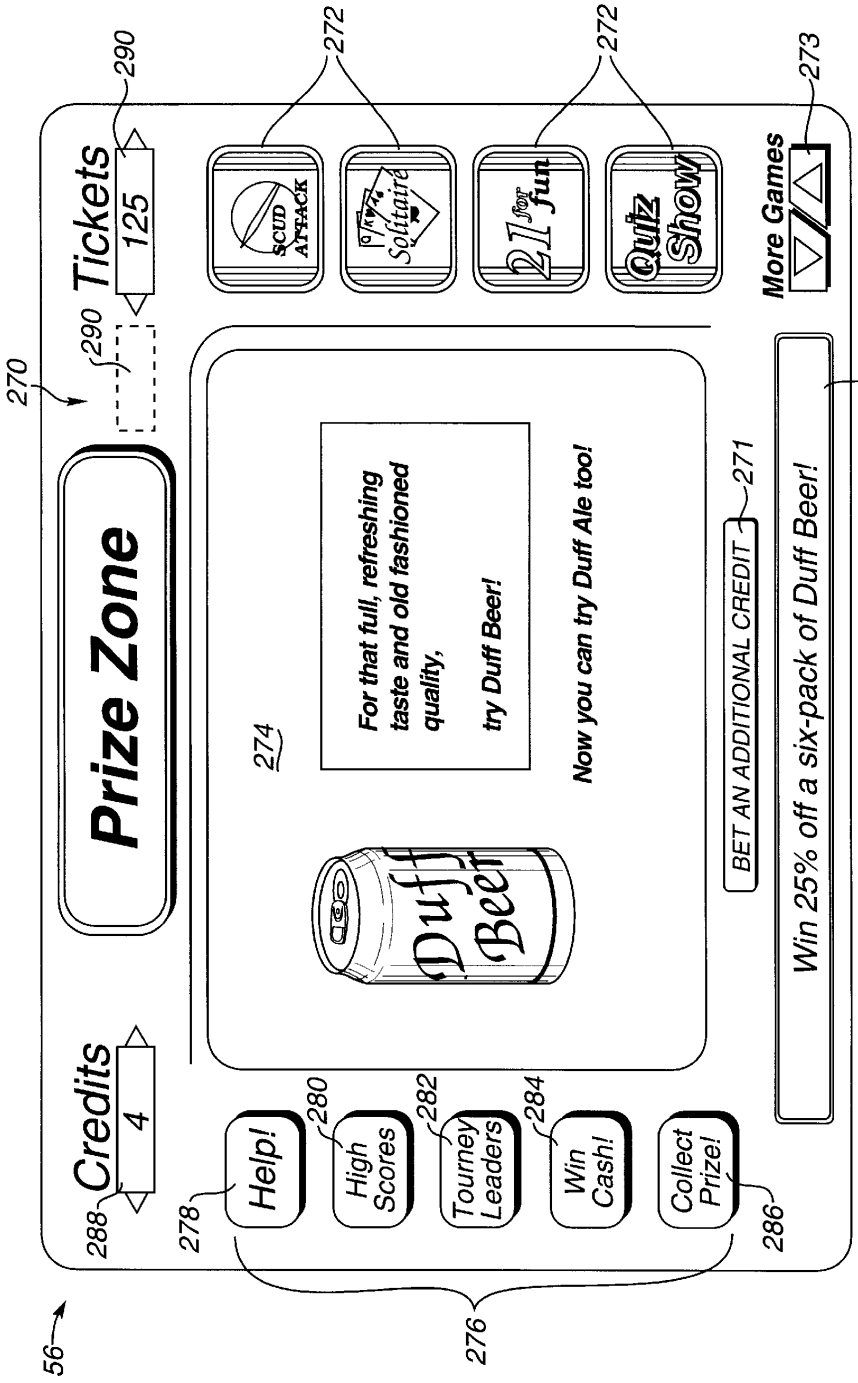
56
270
Prize Zone
Credits
4
288
Tickets
125
290
290
Help!
278
High Scores
280
Tourney Leaders
282
Win Cash!
284
Collect Prize!
286
276
For that full, refreshing taste and old fashioned quality,
try Duff Beer!
Now you can try Duff Ale too!
Duff Beer
274
BET AN ADDITIONAL CREDIT
271
Win 25% off a six-pack of Duff Beer!
292
SCUD ATTACK
Solitaire
21 for fun
Quiz Show
272
272
More Games
273

Figure 5d

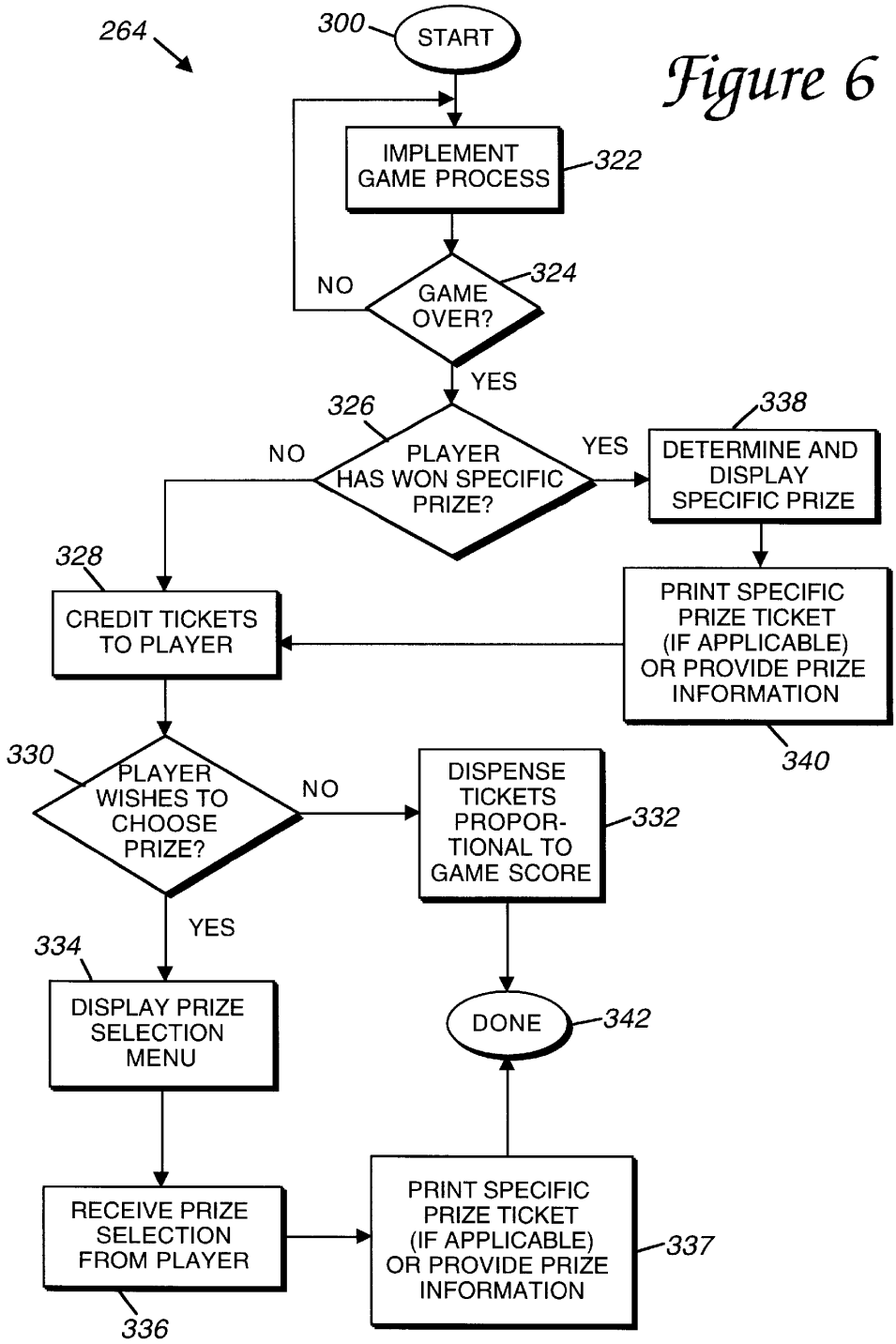
264
300
START
IMPLEMENT GAME PROCESS
322
GAME OVER?
324
NO
YES
326
PLAYER HAS WON SPECIFIC PRIZE?
NO
YES
338
DETERMINE AND DISPLAY SPECIFIC PRIZE
328
CREDIT TICKETS TO PLAYER
PRINT SPECIFIC PRIZE TICKET (IF APPLICABLE) OR PROVIDE PRIZE INFORMATION
340
330
PLAYER WISHES TO CHOOSE PRIZE?
NO
DISPENSE TICKETS PROPOR-TIONAL TO GAME SCORE
332
YES
334
DISPLAY PRIZE SELECTION MENU
DONE
342
RECEIVE PRIZE SELECTION FROM PLAYER
PRINT SPECIFIC PRIZE TICKET (IF APPLICABLE) OR PROVIDE PRIZE INFORMATION
337
336

Figure 6

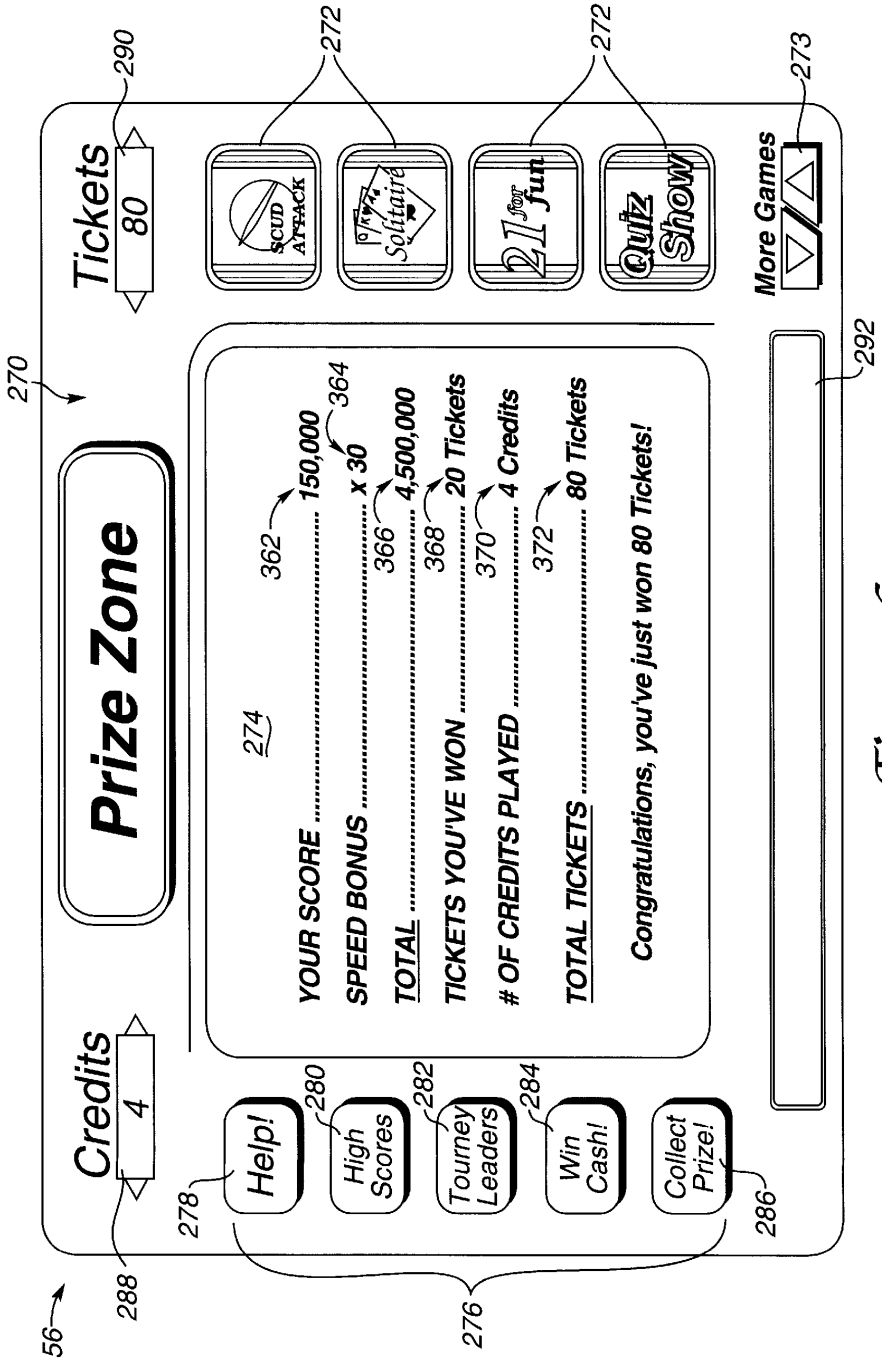
Tickets
80
Credits
4
Prize Zone
SCUD ATTACK
Solitaire
21 for fun
Quiz Show
More Games
YOUR SCORE 150,000
SPEED BONUS ..... x 30
TOTAL 4,500,000
TICKETS YOU'VE WON ..... 20 Tickets
OF CREDITS PLAYED ..... 4 Credits
TOTAL TICKETS ..... 80 Tickets
Congratulations, you've just won 80 Tickets!
Help!
High Scores
Tourney Leaders
Win Cash!
Collect Prize!
56
270
272
273
274
276
278
280
282
284
286
288
290
292
362
364
366
368
370
372

Figure 6a

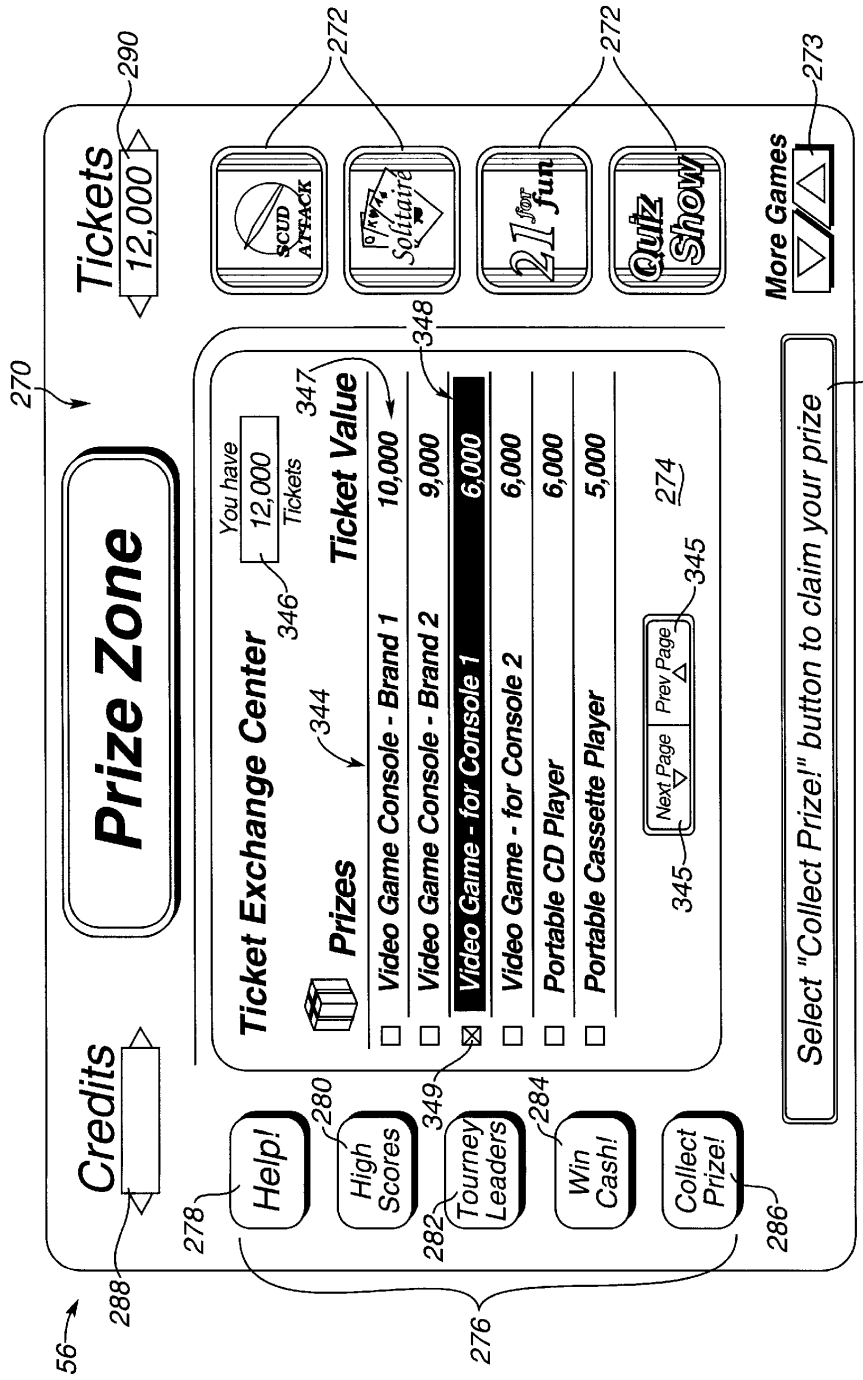
Tickets
12,000
290
272
272
273
SCUD ATTACK
Solitaire
21 for fun
Quiz Show
More Games
270
Prize Zone
Ticket Exchange Center
You have
12,000
Tickets
346
347
Ticket Value
348
Prizes
344
Video Game Console - Brand 1 10,000
Video Game Console - Brand 2 9,000
Video Game - for Console 1 6,000
Video Game - for Console 2 6,000
Portable CD Player 6,000
Portable Cassette Player 5,000
Next Page
Prev Page
345
345
274
Select "Collect Prize!" button to claim your prize
292
Credits
288
Help!
278
High Scores
280
Tourney Leaders
282
349
Win Cash!
284
Collect Prize!
286
276
56

Figure 6b

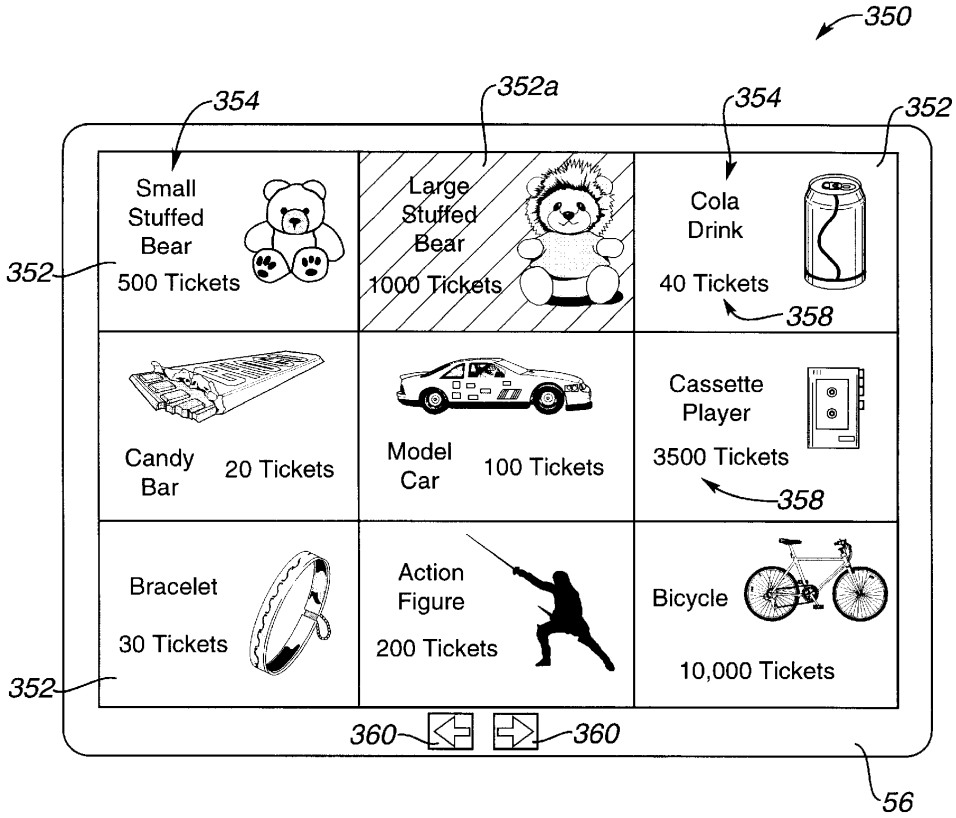
350
354
352a
354
352
Small Stuffed Bear
500 Tickets
352
Large Stuffed Bear
1000 Tickets
Cola Drink
40 Tickets
358
Candy Bar
20 Tickets
Model Car
100 Tickets
Cassette Player
3500 Tickets
358
Bracelet
30 Tickets
352
Action Figure
200 Tickets
Bicycle
10,000 Tickets
360
360
56

Figure 6c

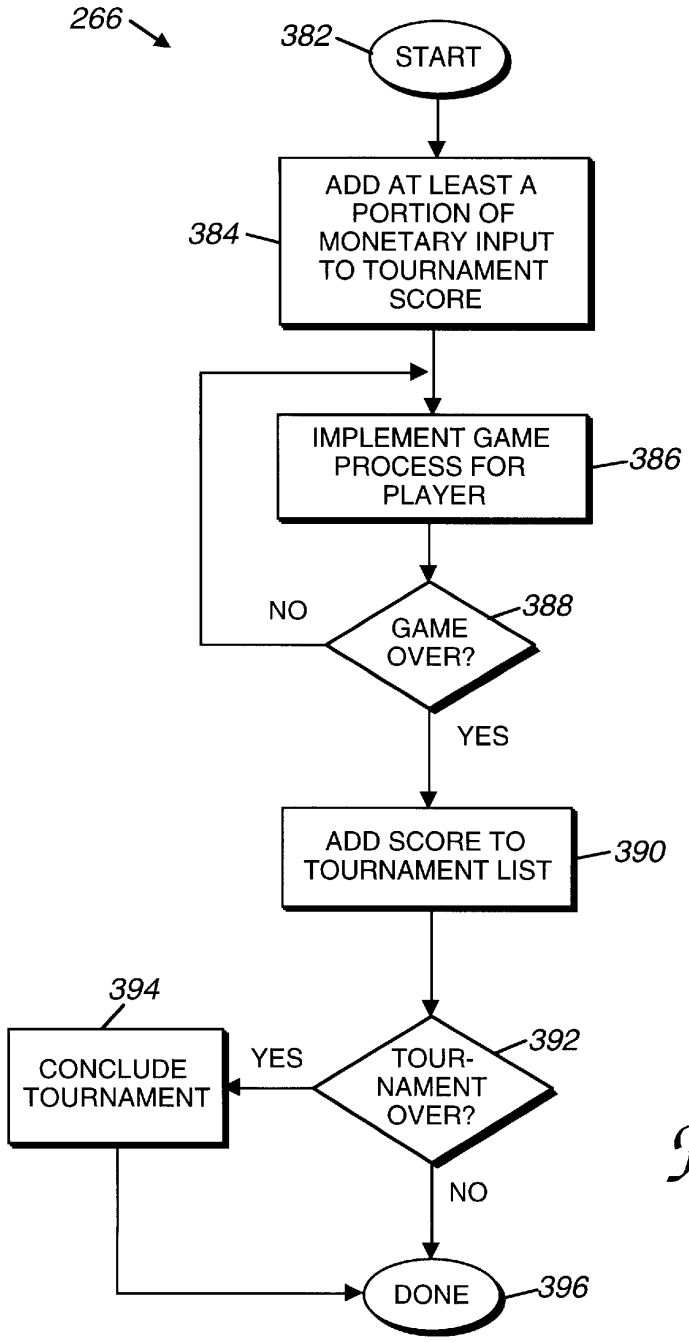
266
382
START
ADD AT LEAST A PORTION OF MONETARY INPUT TO TOURNAMENT SCORE
384
IMPLEMENT GAME PROCESS FOR PLAYER
386
NO
GAME OVER?
388
YES
ADD SCORE TO TOURNAMENT LIST
390
394
CONCLUDE TOURNAMENT
YES
TOUR-NAMENT OVER?
392
NO
DONE
396

Figure 7

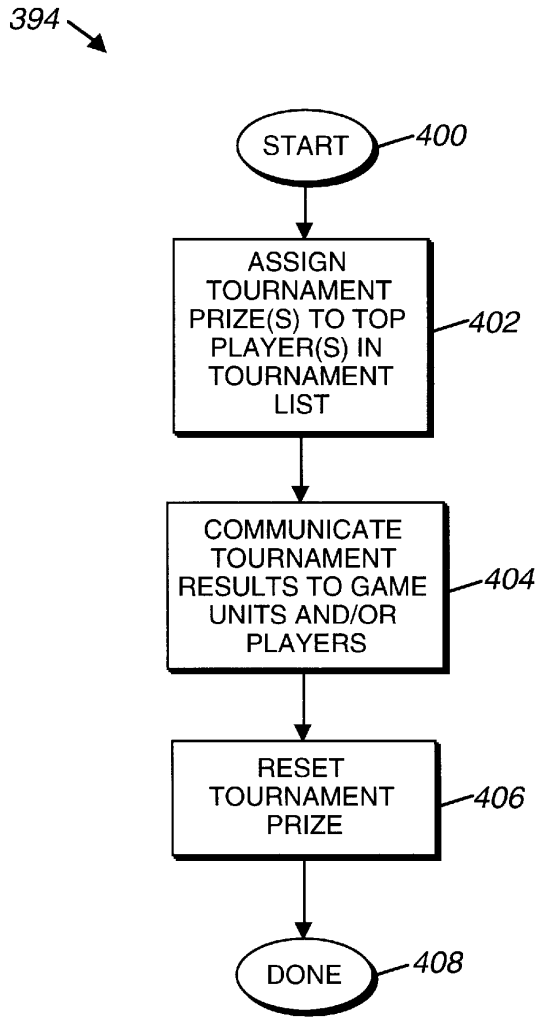
394
START
400
ASSIGN TOURNAMENT PRIZE(S) TO TOP PLAYER(S) IN TOURNAMENT LIST
402
COMMUNICATE TOURNAMENT RESULTS TO GAME UNITS AND/OR PLAYERS
404
RESET TOURNAMENT PRIZE
406
DONE
408

Figure 8

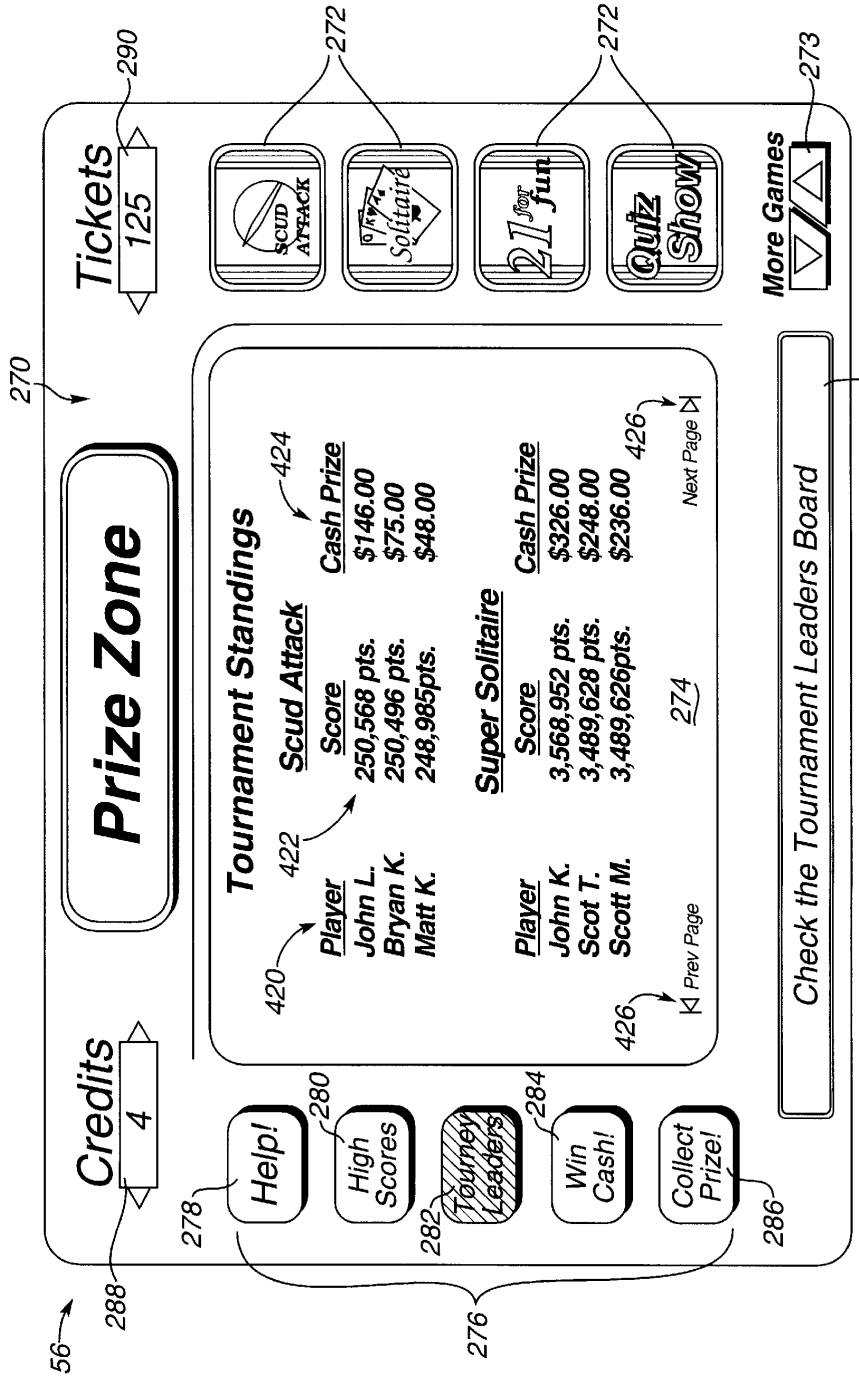
Tickets
125
290
272
272
273
SCUD ATTACK
Solitaire
21 for fun
Quiz Show
More Games
270
Prize Zone
Tournament Standings
424
Scud Attack
Cash Prize
Player
Score
John L. 250,568 pts. $146.00
Bryan K. 250,496 pts. $75.00
Matt K. 248,985pts. $48.00
422
420
Super Solitaire
Cash Prize
Player
Score
John K. 3,568,952 pts. $326.00
Scot T. 3,489,628 pts. $248.00
Scott M. 3,489,626pts. $236.00
Next Page
426
Prev Page
274
292
Check the Tournament Leaders Board
Credits
4
288
Help!
278
High Scores
280
Tourney Leaders
282
Win Cash!
284
Collect Prize!
286
276
56

Figure 8a

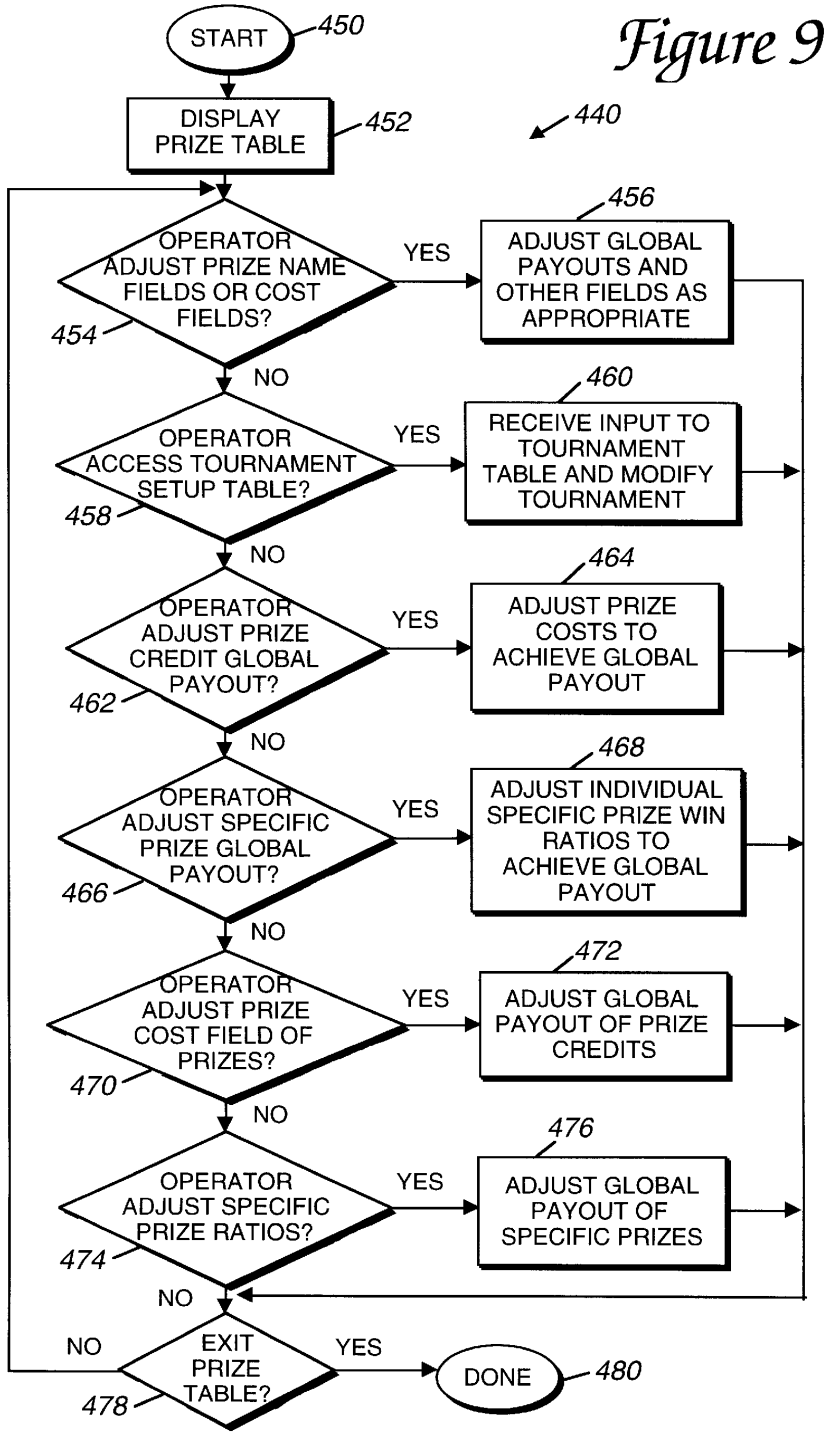
Figure 9
440
START
450
DISPLAY PRIZE TABLE
452
OPERATOR ADJUST PRIZE NAME FIELDS OR COST FIELDS?
454
YES
ADJUST GLOBAL PAYOUTS AND OTHER FIELDS AS APPROPRIATE
456
NO
OPERATOR ACCESS TOURNAMENT SETUP TABLE?
458
YES
RECEIVE INPUT TO TOURNAMENT TABLE AND MODIFY TOURNAMENT
460
NO
OPERATOR ADJUST PRIZE CREDIT GLOBAL PAYOUT?
462
YES
ADJUST PRIZE COSTS TO ACHIEVE GLOBAL PAYOUT
464
NO
OPERATOR ADJUST SPECIFIC PRIZE GLOBAL PAYOUT?
466
YES
ADJUST INDIVIDUAL SPECIFIC PRIZE WIN RATIOS TO ACHIEVE GLOBAL PAYOUT
468
NO
OPERATOR ADJUST PRIZE COST FIELD OF PRIZES?
470
YES
ADJUST GLOBAL PAYOUT OF PRIZE CREDITS
472
NO
OPERATOR ADJUST SPECIFIC PRIZE RATIOS?
474
YES
ADJUST GLOBAL PAYOUT OF SPECIFIC PRIZES
476
NO
EXIT PRIZE TABLE?
478
NO
YES
DONE
480

Figure 9a

480

Prize Setup Screen

56

490 491 492

Prize Credits Global Payout %			Insta-Prize Global Payout %		
-1%	20%	+1%	-1%	10%	+1%

491 494 494

482

List of Available Prizes	Your Actual Cost	Prize Credits to Win	Insta-Prize Win Ratio
Cola Drink	$0.20	40	1 in 8
Free Game	$0.25	50	1 in 10
Candy Bar	$0.30	60	1 in 12
Glass of Beer	$0.50	100	1 in 20
Pitcher of Beer	$1.00	200	1 in 40
Small Pizza	$3.00	600	1 in 120
T-Shirt	$4.00	800	1 in 160
$20 Gift Certificate	$8.00	1600	1 in 320
Portable CD Player	$50.00	10,000	1 in 2000
Video Game Console	$100.00	20,000	1 in 4000

484 486 488

490

TOURNAMENT SETUP SCREEN

492	494	496	498	500	502	504					506	508	510	512	514
						WINNING % FOR PLACES									
GAME	Tourna-ment On/Off	Games Required	Cost/ Game (coins)	% Applied to Tournament Prize	Seed Money	1st Place	2nd Place	3rd Place	4th Place	5th Place	Start Date	Start Time	End Date	End Time	Repeat Tourney
SCUD ATTACK	ON	3	1	50%	$50	40%	25%	15%	10%	10%	2/1/97	8:00	2/14/97	23:00	NO
SOLITAIRE	OFF														
QUIZ	ON	1	1	30%	$30	60%	30%	10%	0%	0%	2/20/97	14:00	3/20/97	12:00	YES
FUN 21	NOT AVAIL.														

Figure 9b

PRIZE REDEMPTION SYSTEM FOR GAMES

CROSS REFERENCE TO RELATED APPLICATIONS

This application is a continuation-in-part of co-pending parent patent application Ser. No. 08/628,490, filed Apr. 5.1996, on behalf of Bryan M. Kelly et al., entitled, "REDEMPTION GAME FOR AWARDING SPECIFIC PRIZES", assigned to the assignee of this present application, and which is hereby incorporated by reference herein in its entirety.

BACKGROUND OF THE INVENTION

1. Field of the Invention

This invention relates to games normally played in an arcades and other environments, and more particularly to redemption games allowing a player to receive one or more prizes in connection with playing the game.

2. Background of the Related Art

Games of many types are played in bars, arcades, homes, and other public and private establishments. In bars, taverns, and like places, games can be provided on bar tops, side tables, and other areas. These games typically include a video screen and buttons or other controls for the player to influence objects and events portrayed on the video screen. Common "bar-top" games include card games (poker, blackjack, solitaire, etc.), quiz games, sports games, and the like. Bar-top games typically provide a score based on the player's performance during the game, and may also provide a high score list which provides incentives for players to perform well.

In game arcades, convenience stores, and the like, more involved games are often offered, such as stand-up arcade video games, pinball games, and mechanical or carnival games. Some of these types of games are offered as redemption games which dispense redemption tickets to players based on player performance during the game and/or a game score that the player achieves. A player can exchange dispensed redemption tickets for prizes available at a prize display area, such as a prize booth or prize vending machine, where such prizes as stuffed animals, models, other toys, small music devices, T-shirts, food, etc. are available. Each prize has an associated cost or "price" in terms of redemption tickets which the player can pay to redeem the prize. A player may collect tickets over time to save up for larger prizes that may have higher ticket prices.

One problem with the redemption games of the prior art is that maintaining a redemption system can be very involving for the operator of the arcade, to the point of being burdensome. For example, operators must maintain a prize booth or vending machine which displays all the prizes the operator wishes to make available. Requiring even greater maintenance is the setting and adjustment of ticket costs or prices of the prizes. The operator must determine how many tickets are paid, on average, by each game in the arcade and then determine the price of each prize in terms of tickets and in view of a desired profitability level. The operator knows the cost of the prizes that he or she paid, can come up with a crude estimate of average ticket payouts to players, and can thus estimate ticket costs with a rough profitability in mind, but the task can become overwhelming when a large variety of prizes are offered and many different types of games can be played, each game having a different ticket payout and difficulty level. Many arcade operators end up simply providing very gross estimates of what prizes should be worth in tickets, with no exact or global level of profitability in mind. This may lead to extra or unknown costs which can be magnified over time when large numbers of prizes are redeemed by players.

In addition, the prior art redemption games and redemption systems are not suitable for bars, taverns, and other, non-arcade public places, such as stores, hotels, food establishments, etc. There is a very large potential pool of redemption game players in such places. This is because the games typically offered in bars and like places often have low appeal to players due to the absence of any sort of tangible award or prize that is received by playing the game. For example, the bar-top and other games typically found in bars may quickly get uninteresting if the only reward a player receives is to put his or her name on a high-score list.

However, non-traditional gaming environments such as bars are not very suitable for supporting redemption systems like those found in gaming arcades. The proprietor or bartender of the non-arcade environment often does not want to provide a booth or area to display available prizes for players due to the additional maintenance and staff needed for such a display area. More importantly, the proprietor typically does not have the knowledge to properly adjust payouts of redemption games and offer prizes with proper and profitable ticket costs. Even if the proprietor has such knowledge, the small numbers of games and/or the secondary role of games in non-traditional gaming environments does not warrant providing a prize display area and does not warrant the abovementioned overhead of providing and counting the many tickets that players may accumulate and providing/maintaining ticket costs for various prizes in view of a desired profitability of the games.

Other gaming environments for players include homes or other private places. Players have been able to play board games, computer games, video games, etc. at home or other private environments for a long time. However, with the widespread use of standardized large-scale networks such as the Internet and World Wide Web in recent years, players of video and computer games at home are offered an environment to compete with each other which was not widely available to game players before. A player can connect a home computer, video game console, set top box, or other device to the Internet using telephone lines, cable TV lines, or other connections to the home. The player can thus play games offered to the player from a remote server or other source. The player can also compete or otherwise interact in a game with hundreds or even thousands of other players who are also connected to the Internet.

However, although a wide array of options are available for home game players, players typically cannot play games from home to receive prizes. Players may often desire to receive a prize after playing a game or participating in a tournament, but no standardized prize redemption system is provided to home players. Any administrator of such a prize redemption system faces the same problems and overhead as described above when attempting to organize ticket winnings and offer prizes at ticket costs adjusted for a desired profitability.

SUMMARY OF INVENTION

The present invention provides a prize redemption system and method for use with one or more game apparatuses. Players may win "prize credits" by playing the game apparatus, and may then select a prize from a prize menu offered on the game apparatus. The selected prizes and specific prizes may be redeemed using specific prize tickets

or coupons. The operator can provide cost and prize data and a desired level of profitability, and prize credit costs for prizes are automatically determined. These improvements greatly reduce the time and costs of maintaining a redemption system for games, and thus allow redemption games to be offered in wholly new, non-traditional redemption and gaming environments.

More specifically, the prize redemption system and method of the present invention provides a game on a game apparatus for a player to play, preferably in exchange for monetary input. The game apparatus, for example, can take the form of a bar-top-style game console including a game processor, display screen and player controls. A number of prize credits are provided to the player based on an outcome of the game and optionally accumulated from previous games. In some embodiments, the outcome of the game is influenced by skill of the player. A prize selection menu is then displayed for the player, the menu including one or more selectable prizes. The prize selection menu may include a prize cost in terms of prize credits for each of the displayed prizes and which can be determined by the redemption system. Finally, the player inputs an indication of a selection of a prize using an input device. The player may select a prize that has a prize cost equal to or less than the number of prize credits the player has won. The selected prize is provided to the player after this selection. In one described embodiment, the player receives a specific prize ticket or coupon from a dispenser, where the specific prize ticket is redeemable for the selected prize.

In the preferred embodiment, at least one specific prize goal may also be achieved during a game, using skill or by chance. If a specific prize goal is achieved, the player receives a specific prize which can be determined from a prize table listing specific prizes that can be won by a player. The game apparatus can provide many types of games and options for games. For example, an option can be provided to the player for playing a tournament game for a tournament prize contributed to by multiple players of the game apparatus and other linked game apparatuses. Examples of games offered by the game apparatus include action video games which provide a player with opportunities to utilize dexterity and play duration in increasing game score, card games in which the outcome of the game is, in part, randomly influenced, quiz games providing questions to which said player responds, slot machine games, electromechanical redemption games, etc.

The game apparatus can also be linked to multiple other game apparatuses to provide simultaneous multi-player games and tournaments including players from several different game apparatuses. A server linked to the multiple game apparatuses can store or control prize information and/or tournament information. Players of the linked game apparatuses may choose prizes from a central prize database communicated to the game apparatuses.

In another aspect of the present invention, the redemption system provides an operator the ability to adjust prizes and determine desired prize costs and win ratios. A prize table is displayed on a game apparatus or other computer system. Prize input is received from the operator or other source (e.g., remote server) and displayed in the prize table. The prize input describes multiple prizes that are to be available in the redemption system to players of the game apparatus in exchange for prize credits won by the player and as specific prizes. The prize input also may include an actual monetary cost of each of the prizes. The operator also enters payout input that indicates a desired amount of payout that said operator wishes to provide back to players of the game apparatus in terms of the value of the prizes. Finally, prize information is automatically determined for each of the prizes, the prize information being determined in view of a desired profitability of the game apparatus.

For prizes won by prize credits and selected by a player, the prize information is a prize cost for each of the prizes in terms of prize credits. The prize cost is determined in accordance with the operator's desired amount of payout. The payout input for credit prizes may include a global payout percentage value that is the operator's desired percentage of the monetary income earned by the game apparatus that the operator wishes to provide back to players in the form of the prizes won using prize credits. Operators can also manually adjust prize costs if desired.

For specific prizes won on the game apparatus, the determined prize information includes a win ratio for each of the prizes in terms of how frequently that the particular prize is awarded when a specific prize goal is met. The win ratio is determined in accordance with the operator's desired amount of payout. The payout input for specific prizes includes a global payout percentage that is the operator's desired percentage of the monetary income earned by the game apparatus that the operator wishes to provide back to players in the form of specific prizes. The operator can also manually adjust win ratios if desired. Tournament characteristics and payouts can be similarly adjusted by the operator using a tournament setup table.

The redemption system and game apparatus according to the present invention offer a comprehensive prize system that provides a player with immediate and easy to select prize choices. The player can quickly determine what prizes are available on the same game apparatus which the game was played and select a desired prize. The players can also win a specific prize. The players may immediately get a specific prize ticket that is redeemable for their selected prize or specific prize, thus avoiding the time and money of accumulating large numbers of dispensed tickets to purchase prizes. Player involvement with the redemption games is thus increased.

Furthermore, the redemption system of the present invention vastly decreases operator involvement in a prize redemption system and the overhead of maintaining a prize structure for redemption games. An operator need only input desired prizes and a desired percentage of income that is to be paid back to players, and the system can automatically determine prize credit costs and win ratios for the entered prizes which achieve the desired profitability of the game apparatus. These entered prizes and prize costs are then automatically provided to players on the game apparatus. This reduces the operator's need to update prizes and prize costs and provides a far more exact system for maintaining prizes and achieving a desired profitability of offered games, thereby reducing operating and maintenance costs of redemption games and allowing redemption games to be provided in non-traditional gaming environments.

These and other advantages of the present invention will become apparent to those skilled in the art after reading the following descriptions and studying the various figures of the drawings.

BRIEF DESCRIPTION OF THE DRAWINGS

FIG. **1** is a diagrammatic illustration of a game apparatus suitable for use with the present invention;

FIG. **1***a* is a block diagram of a game processor used in the game apparatus of FIG. **1**;

FIG. **2** is a perspective view of a preferred embodiment of the game apparatus of FIG. **1**;

FIG. **3** is a block diagram showing an embodiment of the present invention for implementing networked game apparatuses;

FIG. **4** is a block diagram of game units networked using wide area network such as the Internet;

FIG. **5** is a flow diagram illustrating a process of the present invention for implementing a redemption system of the present invention on one or more individual game units;

FIG. **5***a* is a diagram illustrating a display shell on a display screen of the game apparatus for use with the redemption system;

FIG. **5***b* is a diagram illustrating a selection screen of the game apparatus;

FIG. **5***c* is a diagram illustrating a promotion on the display screen of the game apparatus;

FIG. **5***d* is a diagram illustrating an advertisement on the display screen of the game apparatus;

FIG. **6** is a flow diagram illustrating a method of implementing a non-tournament prize game in the process of FIG. **5**;

FIG. **6***a* is a diagram illustrating an example of game score and prize credits won by a player as displayed on the display screen of the game apparatus;

FIG. **6***b* is a diagram illustrating a prize selection menu on the display screen of the game apparatus;

FIG. **6***c* is a diagram illustrating a graphical prize selection menu alternative to the menu shown in FIG. **6***b;*

FIG. **7** is a flow diagram illustrating a method of implementing a tournament game of the process of FIG. **5**;

FIG. **8** is a flow diagram illustrating a method of concluding a tournament game of FIG. **7**;

FIG. **8***a* is a diagram illustrating FIG. **8***a* is a tournament standings display screen which is preferably displayed by the individual game unit after a selection of the tourney leaders button **282** or after a tournament is complete.

FIG. **9** is a flow diagram illustrating a process of the present invention for adjusting prize characteristics of the redemption system;

FIG. **9***a* is a diagram of a prize table suitable for use with the process of FIG. **9**; and

FIG. **9***b* is a diagram of a tournament table suitable for use with the process of FIG. **9**.

DETAILED DESCRIPTION OF THE PREFERRED EMBODIMENTS

FIG. **1** is a block diagram of a generic game apparatus or "game unit" **10** suitable for use with the prize redemption system of the present invention. It should be noted that a variety of game architectures can be used to provide game play functions as well as access other game units and servers through networks, as described below. The particular architecture shown is a generic architecture using components typical to game apparatuses suitable for use with the present invention. Game unit **10** can take a variety of forms, including a video game apparatus having one or more display screens, a mechanical game having playing pieces and/or other moving mechanical parts, a personal computer system, a "network computer", a television including or connected to a microprocessor (e.g. a "set top box") for Internet or other information access, or other apparatus.

As described herein, the game unit **10** is used by a player in a "gaming environment." This term is intended to refer any location, public or private, in which games can be used. For example, public gaming environments include such places as arcades, stores, restaurants, bars, casinos, bowling alleys, stations, hotels, airports, airplanes, cruise ships, gymnasium, health club, or other public place that can offer the game unit for use by players and which can provide prizes to players of the game apparatus. A "gaming environment" need not ordinarily provide games to the public. In other embodiments, a "gaming environment" can be a private place such as a player's home or personal residence, office or other place of employment, private club, etc.

Game unit **10** in accordance with the present invention may include a game processor **12**, monetary input device **14**, player input device(s) **16**, game output device(s) **18**, a universal ticket dispenser **20**, a specific prize ticket dispenser **22**, and a communication device **24**.

Game processor **12** implements (e.g., controls, influences, coordinates, monitors, calculates, etc.) the functions of the game unit **10** during a game process and includes several input and output functions. The game processor controls the game apparatus by receiving inputs from a player, from other game apparatuses, from a server (described below), from a progressive bonus apparatus, and from other sources. The game processor also controls output signals to update the game process when appropriate. In addition, the game processor controls the redemption system of the present invention by calculating when prizes are awarded, calculating and updating prize lists and prize costs, and other functions as described below. Game processor **12** preferably includes a digital microprocessor or similar controller device, and other electronic components which are described in further detail with respect to FIG. **1***a*. The operation of game processor **12** is described in greater detail below. The game processor is preferably provided within a housing of game unit **10**.

Monetary input device **14** is used to receive monetary input that is inserted by a player into the game apparatus in the gaming environment. For example, coins can be received in return for the player's use of the game apparatus. A coin deposit slot can accept standard currency coins, bills, or game tokens that may be available in the gaming environment, and also typically includes a coin return button and coin return slot. Once one or more coins are accepted, the coins are routed to a cash box and a signal is sent to game processor **12** to increase the player's game credits, i.e., to indicate to that one or more game plays have been paid for. Coin slots and boxes suitable for use in game unit **10** are readily available on the commercial market. Alternatively, other monetary input devices can be used, such as debit card or credit card readers well known to those skilled in the art, or "smart card" readers which can read and write electronic information to and from the card. For example, "E-cash", "cybercash" or other electronic monetary forms can be used. In other embodiments, user verification or validation can be input by the player, such as a player identification and/or password that, for example, allows a monetary value to be billed to a player or deducted from a player's monetary account at a bank or other institution. Herein, the term "monetary input" is intended to also refer to other types of player validation for use of a game in addition to those forms mentioned above. In alternate embodiments located in non-public gaming environments (e.g., at a user's home), or for other applications such as promotional uses of game apparatus **10**, monetary input may not be necessary for the player to use game apparatus **10**.

Input devices **16** are used by a player or user to provide input to the game unit **10** to influence game events during a game process and to achieve one or more predetermined goals or tasks for scoring points and winning prizes or other

types of awards. The input devices **16** can also be used to select prizes within the redemption system of the present invention. Alternatively, separate input controls can be used for the prize functions of the game unit. Player input typically includes game commands provided by controlling devices **16** such as buttons, keyboard, dials, joystick controls, touch screen, track ball, mouse, gun device, steering wheel, foot pedals, speech input through a microphone, or any other input used in playing a game and providing selections. For example, the player can press a button to tilt a playing surface to guide a playing piece, move a joystick to control a graphical object displayed on a video screen, or toss a playing piece into a target aperture having sensors to detect the presence playing piece. Each type of user input can provide a particular game command to the game processor **12**, and the game processor interprets the commands and influences game states and game events in the game process accordingly.

Preferably, game unit **10** implements, a "game of skill", i.e., as referred to herein, a predetermined goal, task, or objective for a game should be accomplished in a skillful manner such that an outcome of the game is determined primarily by the amount of skill of the player. The greater the player's skill, the closer or more easily a desired goal in the game can be reached by the player. Points associated with the predetermined goals or objectives can be added to a game score such that a higher game score, on average, indicates a greater amount of skill by the player. For instance, a displayed object can be skillfully aimed or directed using input devices **16** such as a joystick, buttons, steering wheel, etc. into or to avoid other objects using skill or dexterity involving hand-eye coordination.

Alternatively, a "game of chance" or other game that does not rely primarily on the skill of the player can be offered on game apparatus **10**. For example, such games as slot machines, substantially random card games, roulette and the like may offer a player a chance to win large numbers of tickets or prize credits or other prizes of high value without requiring a high degree of skill.

Various other types of devices can also be included in game unit **10** as input devices **16** to allow the processor **12** to monitor the game. For example, sensors of various types can be employed to detect the paths of playing pieces directed by the player, detect when playing pieces have been dispensed, detect when a game is over, detect cheating actions by the player, etc. Also, input devices such as buttons, switches, etc. allow the player of the game to make various selections concerning game play. For example, a player could select a one- or two-player game, a preferred award type, a progressive option, etc. using additional controls on a front panel of the game unit **10**.

Game output devices **18** may influence the game and/or provide feedback to the player about the current state of the game process. For example, motors or solenoids can influence mechanical components of the game in response to player commands, such as tilting a playing surface, dispensing a playing piece, spinning a wheel, etc. Feedback is perceived by the player preferably in the form of visual, auditory, and/or tactile feedback. A video display screen can provide visual feedback such as images to the player during the game process. Other visual output devices can include one or more score displays, lamps or other light sources positioned on or surrounding a "game space" (e.g., a play field or area of game action). Game output devices such as speakers, buzzers, alarms, and other devices provide auditory feedback such as sound effects during a game process, synthesized or recorded speech, etc. Game output devices such as motors, solenoids, or other actuators can provide forces on the game apparatus or on controls handled by the player to provide tactile feedback in the form of vibration, jolts, etc. One or more of the game output devices can also be used to display information related to specific prizes that can be won by the player when using the game unit **10**, as described below. Game output devices **18** can also include a coin return slot for returning coins or tokens or providing other cash prizes after a game is played. Game processor **12** preferably commands such feedback to the player by sending out control signals to the various output devices in game unit **10** when appropriate.

A preferred output device is a display screen **56**. Game processor **12** utilizes appropriate display drivers, graphics chips, and/or other well-known components to display and update images on the display screen for implementing a game and providing information for the redemption system of the present invention, as described below.

In a typical game process of game unit **10**, a series of game states occur until a game conclusion is reached. The player can influence game states with game commands, but game states will often also change without any user input, such as when a time limit expires. The game conclusion can be triggered by a particular game state or other condition. At the game conclusion, the player's performance and/or skill in the game is preferably related back to the player using one or more output devices **20** in a form such as game score and/or prize credits. For example, the player's performance in the game can be determined by checking if the player achieved a predetermined goal or task during the game.

Universal ticket dispenser **20** can be included in game unit **10** used to dispense universal tickets or other universal vouchers to a player. The universal vouchers are used to redeem prizes available in the gaming environment. For example, tickets can be dispensed from ticket dispensing mechanisms well-known to those skilled in the art.

The universal tickets and other vouchers dispensed by dispenser **20** are referred to herein as "tickets" or "universal tickets." These types of vouchers are generic and not specific to any prize, and can be accumulated by a player and used to redeem one or more of several prizes available to the player. For example, in a standard redemption game arcade, players of games in the arcade receive all the same type of universal tickets from the various games at that arcade. The operator of the arcade provides a separate prize display booth or prize vending machine which accepts the universal tickets as currency in exchange for one or more prizes. In some embodiments, each of the tickets dispensed by dispenser **20** is equal to one prize credit accumulated by the player during a game. Some gaming environments provide universal tickets which may be exchanged for prizes only at one or more limited locations.

The term "prize", as used herein, is intended to generically refer to any merchandise, souvenir, food item, or other physical goods or services which can be offered to players of redemption games and which have value other than as a medium of exchange for use in the gaming environment. A can of soda, slice of pizza, radio, stuffed certificate, cash, and free games to be played on game unit **10** are all examples of "prizes." A prize might also be a promotional coupon, which can encourage players to return to the current gaming environment or location more quickly in the future. For example, a promotional coupon can be dispensed as a specific prize ticket (see below) which offers a player a free pitcher of beer if the player returns and redeems the coupon within 1 week (or whatever free item the operator desires).

Redemption tickets or specific prize tickets would not be considered a "prize" since these tickets can be used in the gaming environment (such as an arcade) to redeem other types of prizes. In arcade-type gaming environments, each prize typically has a cost or value associated with it, specified as an amount of universal redemption tickets (or prize credits). The more valuable the prize, the greater number of tickets is typically required to redeem that prize.

For example, a small toy car prize might have a requirement of 20 tickets, while a large stuffed animal prize might require 1000 tickets for exchange. Since a player can view the prizes and their associated costs in universal tickets, the player can play various games in the arcade until the desired number of universal tickets have been accumulated. The use of a universal ticket allows the operator to provide a specialized "currency" which the players must use to exchange for prizes at the arcade. Other types of objects or items can also be dispensed and used as universal vouchers, such as plastic or cardboard chips, tokens, etc., or even coins or other currency.

The amount of universal tickets dispensed to the player is typically based upon a game score or other result of a game process. In addition, special or progressive goals may be achieved by the player to win an additional or specified number of universal tickets. In the preferred embodiment of the redemption system, "tickets" or "prize credits" are used as a medium of conversion from game score to prize value. Actual physical universal tickets may never be dispensed to a player if the player uses his or her ticket winnings to directly purchase a prize within the redemption system. The selection of prizes in the present invention is described in greater detail with respect to FIGS. **5** and **6**.

The game processor **12** can issue commands to start the dispensing of tickets, dispense a particular number of tickets, and stop dispensing tickets. The tickets are stored in a storage area, such as a receptacle behind a front panel of the game unit **10**, as is well known to those skilled in the art. In other embodiments, no universal dispenser **22** is included in game unit **10** and prizes are redeemed solely by the use of specific prize tickets (described below) or other means.

Specific prize ticket dispenser **22** is optionally included in game unit **10** to dispense special tickets, coupons, or other vouchers for specific prizes to the player of the game unit. Specific prize tickets are to be distinguished from the universal tickets described above. A "specific prize" or "instant prize", as referred to herein, is a particular prize or type of prize that a player can be directly and immediately awarded and, in most cases, can immediately receive due to a particular winning result on game unit **10**. Preferably, the player redeems the specific prize by paying an appropriate specific prize ticket to an operator, vending machine, etc., that the player received from ticket dispenser **22** based on a particular winning result on the game unit. A "specific prize ticket", "specific prize coupon" or "specific prize voucher", as referred to herein, is a ticket, coupon, or other physical or electronic voucher that can be exchanged for the specific prize only, and cannot be exchanged for other types of prizes or accumulated to purchase several types of prizes. For example, paper or cardboard tickets, special metal, plastic, or cardboard coins or tokens, smart cards, etc., can be used as "specific prize tickets" and dispensed or output from specific prize ticket dispenser **22**.

In the preferred embodiment, a specific prize ticket refers to an associated specific prize in some way and has a standardized format that is recognizable and verifiable by the prize supplier or operator. The specific prize ticket thus verifies that the player legitimately won a prize from a game unit **10** within an operator's control or knowledge. For example, a specific prize ticket can include on its face a text description and/or a pictorial description of the particular prize won, such as a slice of pizza or a stuffed animal. The player can turn in the specific prize ticket to a display booth, other prize area, attendant, bartender, waiter, etc. and receive the specific prize referred to on the specific prize ticket. In other embodiments, the player who won a specific prize can send in the specific prize ticket or other voucher to a prize distributor or seller and receive a prize by mail or other delivery service. In still other embodiments, the specific prize ticket can be provided in electronic form as, for example, bits or other data to be stored on a storage device or medium. Alternatively, the specific prize ticket can simply designate that it is a specific prize ticket and not a universal ticket, and other operator-determined factors can determine which particular prize can be redeemed by the specific prize ticket. Specific prizes and specific prize tickets offer a player greater excitement and involvement in a game by allowing large prizes to be won instantly without accumulating tickets, and also provide the game operator with promotional opportunities and simple verification that players have won particular prizes. Specific prize tickets are described in greater detail in copending patent parent application Ser. No. 08/628,490.

Specific prize ticket dispenser **22** is preferably a separate dispenser from universal ticket dispenser **20**, although in alternative embodiments the two dispensers **20** and **22** can be implemented as a single dispenser. In a preferred embodiment, specific prize ticket dispenser **22** includes a printing device, such as a laser printer, ink printer, or thermal printer, that outputs a slip of paper including a text description and/or pictorial representation of the specific prize which can be redeemed for the ticket. This same printing device can also be used to print either universal tickets with markings/indicia or specific prize tickets with indicia specific to a specific prize that has been won by a player. Since players may try to produce counterfeit specific prize tickets/vouchers, the specific prize vouchers can be provided on specialized paper, cardboard, or other material and/or include special identifying marks, code or password not easily reproduced. In some embodiments, the specific prize ticket dispenser can print a value or description on the specific prize ticket in standardized bar code format which can be read by standard bar code readers. For example, a specific prize ticket awarding $1.00 off the price of a product can be printed with the appropriate bar code and thus can be accepted by any retail establishment able to read bar codes on products. The specific prize ticket dispenser **22** is controlled by game processor **12** similarly to dispenser **20** described above.

In alternate embodiments, no universal ticket dispenser **20** is included in game unit **10** so that only specific prize tickets can be dispensed and exchanged for prizes. This embodiment offers the operator the advantage in that a whole price structure for prizes need not be maintained in a prize booth or other display area. These features reduce the operating and maintenance costs of implementing a redemption system. Alternatively, the specific prize ticket dispenser **22** can be used in place of universal tickets and the universal dispenser by dispensing a single ticket "receipt" that has a universal ticket value printed on it. Players can thus save receipts indicating how many tickets they have accumulated rather than saving large numbers of universal tickets.

In still other embodiments, game unit **10** does not include a specific prize ticket dispenser **22**. Specific prizes can still

be won by a player using the game unit **10**, but the prizes are claimed and received in some other manner than by ticket redemption. For example, when a player achieves a predetermined task on game unit **10** to win a specific prize, a message is displayed on a display screen or other output device indicating that the specific prize has been won. That message can be "frozen" or displayed until an operator or prize supplier gets a chance to see the message and personally verify that the prize has been won. The specific prize can then be given to the winning player. The operator can then reset the game to remove the prize message so that players can continue to play the game. Alternatively, the operator can have access to a central computer or game that is linked to game unit **10** through communication device **24** (described below), such as the computer that implements a tournament score, and remotely verify that the a specific prize has been won and reset the game apparatus from the central computer. In yet other embodiments, the dispenser **22** is provided separately from game unit **10** and is linked through communication device **24** to receive prize information through electrical connections. In this way, a small number of centralized prize dispensers **22** can service a larger number of game units **10** all linked to the central dispensers.

In other embodiments, a player can insert a card or other medium which stores electronic data into a suitable output device **18**. The game unit **10** then can write electronic data on the medium indicating the specific prize that was won by the player, and/or indicating a number of tickets or prize credits which the player has won. The player can then take the card and insert the card into a suitable card reader connected to a prize selection apparatus (prize selection is described in greater detail below). The prize selection apparatus can be a game unit **10**, or a separate "prize center" which can be used solely for prize selection.

Communication device or link **24** can optionally be included to allow game unit **10** to communicate with other game apparatuses or with other computing, storage, and/or processing devices, such as a progressive bonus apparatus or server, described below. For example, a separate progressive bonus apparatus can be provided which is connected to multiple game units **10** through communication devices **24**. Each individual game unit **10** contributes to a collective progressive score that is stored and displayed by the bonus apparatus. The progressive score, for example, can be incremented with every coin inserted in input device **14** of any linked game unit, or automatically incremented over time at regular or random intervals, manually incremented by an operator of the progressive apparatus, etc. The progressive score is accumulated from the current and previous games that have been played on the linked game units **10**. The first player that achieves a predetermined progressive goal on any of the linked game apparatuses wins the progressive bonus score, where the progressive score is added to that player's game score and thus allows that player to win a greater number of universal tickets and/or specific prize tickets that may be associated with the progressive score. Alternatively, an individual progressive score can be accumulated on a single, individual game apparatus **10** and displayed on a progressive score display separate from a game score display. For example, the individual progressive score can be incremented by a predetermined amount each time a player inserts a coin in a coin slot. Progressive goals, scores, and bonus apparatuses are described in greater detail in U.S. Pat. No. 5,292,127, by Kelly et al., and co-pending patent application Ser. No. 08/374,490, by Kelly et al, both of which are hereby incorporated by reference herein in their entirety.

Communication device **24** can also be used to communicate directly or indirectly with other game units **10** and other processing devices to allow multiple players to participate in a game process. For example, one game unit **10** can allow a player to control one player-controlled object in a video game, while a different game apparatus linked through communication device **24** can allow a different player to control his or her own object in the same video game. Such linked apparatuses can also be used in quiz-type games, for example, in which players simultaneously or successively compete to hit a button to answer a question, score points, etc.

Communication device **24** can also be used to allow game unit **10** to communicate with an operator, server, or other central controller that regulates and coordinates prize distribution to game apparatuses linked to the controller in the current redemption system. For example, an operator in a game arcade can input a desired prize that will be associated with a specific prize ticket. This input information is communicated to the linked game apparatuses, allowing those linked game apparatuses to dispense a specific prize ticket that displays the prize that the operator entered. Similarly, the linked game apparatuses can communicate information to a tournament server, for example, that assists the operator or the server in operating the games or tournaments. For example, a linked game unit can inform the operator or server when specific prizes are won and the type of prize won, how many specific prize tickets have been dispensed over a predefined time period, how many universal tickets have been dispensed, how many progressive bonus awards have been won, etc.

Communication device **24** can be implemented as any one of many devices well known to those skilled in the art. For example, device **24** can be a network interface card coupled to a main bus of the system, a telephone modem, a cable modem, a direct network connection, or other device for communicating information according to standard network or modem protocols. Alternatively, device **24** can be a wireless transmitter/receiver for communicating without the use of cables or wires, e.g., using infrared emitters and detectors, broadband RF communication, etc.

FIG. **1***a* is a block diagram of a preferred game processor **12** of FIG. **1**. Game processor **12** receives signals and commands from the player input devices **16** and translates/interprets those signals and commands so that the game process can be updated. Game processor **12** preferably includes a microprocessor **28**, random access memory (RAM) **30**, read-only memory (ROM) **32**, and input/output (I/O) **34**. Microprocessor **28** can be any processor or controller with features sufficient to control the game apparatus. For example, a suitable microprocessor for many mechanical game applications is the Intel 8031 8-bit microprocessor, which includes eight data lines and sixteen address lines. Alternatively, more powerful microprocessors, such as Pentium-class/power PC class microprocessors, or specialized graphical or digital signal processors, can be used. Microprocessor **28** executes a process, described by software instructions stored in memory, which recognizes a game command from player input devices **16**. The software instructions can be stored in a "computer readable medium", which, by way of example, includes memory such as RAM and ROM, magnetic disks, magnetic tape, optically readable media such as CD ROMs, semiconductor memory such as memory chips or PCMCIA cards, etc. In each case, the medium may take the form of a portable item such as a small disk, diskette, cassette, memory module, etc., or it may take the form of a relatively larger or immobile item such as a hard disk drive.

Microprocessor **28** is coupled to RAM **30** by a data (D)/address (A)/control (C) bus **36** to permit the use of RAM for scratch-pad memory and other functions during a game process. ROM **32** is preferably an erasable, programmable read-only memory (EPROM) that contains the start-up instructions and operating system for the microprocessor **28**. Much of the instructions to implement the process of FIGS. **5** and/or **9** can be stored in ROM **32**. Methods for coupling RAM **30** and ROM **32** to the microprocessor **28** by bus **36** including data, address, and control lines are well-known to those skilled in the art.

I/O **34** includes buffers, drivers, ports, registers, and other analog and/or digital circuitry to interface inputs and outputs with the bus **36**. Game output devices **18** and input devices **16** can be coupled to I/O **34**. For example, a display screen can be coupled to I/O **34** so that the microprocessor or another video processor can control the display of images on the display screen, as is well known to those skilled in the art.

Game processor **12** can be implemented as part of a control system including other electronic components (not shown). Besides the components of game processor **12**, the control system can include operator-configurable controls to provide selectable game functions such as the amount the score is incremented for certain player actions or commands, the amount of prize credits awarded based on the score, the speed and/or difficulty of game play, the conditions required to add to the game score and/or receive universal or specific prize tickets, the conditions required for a player to win a progressive bonus award or enter a tournament, etc. These factors can affect the difficulty of the game and the amount of tickets/vouchers received by players. Other functions selectable by such controls can include sound effects, a test mode, the type of game, and so on. The game processor can also include other components, such as a sound chip, audio amplifier, and speaker.

The game processor **12** can also be implemented within a standard personal computer, workstation, network computer, or similar device. The computer can include plug-in interface cards such as video cards, 3-D graphics cards, sound cards, controller cards, etc. Standard peripherals can be coupled to the I/O **34** as input devices **16** and output devices **18**, such as a CD-ROM drive, storage device (floppy disk drive, hard disk drive, etc.), PCMCIA card, printer, stylus and tablet, microphone for voice recognition, camera, or communication device **24**.

FIG. **2** is a perspective view of one embodiment **50** of game unit **10** which can include the features of the present invention to implement games and a redemption system. Game unit **50** is a multi-function game station or game console which is intended to implement multiple types of games using one apparatus, as described below. Game station **50** includes a housing **52**, player controls **54**, display screen **56**, coin slot **58**, speaker **59**, and specific prize ticket dispenser **22** (a universal ticket dispenser **20** can also be included in other embodiments).

Housing **52** encloses and supports the components of the game unit **50**. Player controls **54** allow a player to provide player input as described with reference to FIG. **1**. The player controls preferably include a number of buttons **60** and a track ball **62**. Buttons **60** can be used by a player to input selections or actions offered during games. For example, during a poker-style game showing a hand of cards, each button **60** can be associated with a particular card and the player can hold or discard a card by pressing or not pressing the associated button. Track ball **62** allows a variety of control options in several types of games. For example, the track ball allows a player to easily select certain areas displayed on display screen **56** with a player-controlled cursor. Alternatively, many other types of player controls can be used. For example, display screen **56** can be provided as a touch screen for reading the positions of objects that contact the screen. This allows players to select objects displayed on the touch screen by pressing a finger directly on the screen at the positions of the displayed objects, as is well known to those skilled in the art.

Images can be displayed and updated on display screen **56** by game processor **12** or other controllers by methods well known to those skilled in the art. Coin slot **58** is provided for the player to insert one or more coins before starting a game and can be implemented as described above. Other monetary input devices, such as card readers, can be provided in other embodiments. Specific prize ticket dispenser **22** is implemented as described above. Depending on the location of the game unit **10**, a universal-ticket dispenser **20** may or may not be included. In standard redemption game environments, the dispenser **20** can be provided as described above. In some non-standard gaming environments, such as bars, restaurants, stores, etc., it may be more appropriate to have only a specific prize ticket dispenser in game unit **10** since a prize display area may not be present in the non-standard gaming environments.

Alternately, other input and output devices can also be included in game unit **50**. For example, a card reading/writing device, a video scanner, a video camera, a microphone, a dollar bill acceptor, personal digital assistant interface port, or other devices can be provided to allow a player to input data from various sources and to allow the game unit to output prize information in a variety of forms.

Multi-use game unit **50** can be used in a variety of gaming environments. For example, game unit **50** is small enough to be easily located, thus allowing the game unit to be provided as a "bar top" game in a bar, restaurant, or similar environments and locales. The redemption system of the present invention can thus be used in these non-traditional environments, where redemption games have not unit **50** can also be used in environments such as a gaming arcade. Also, environments such as casinos can use game unit **50** as shown in FIG. **2** or in modified form.

The bar top game **50** can offer one of several different types of video games utilizing images displayed on display screen **56**. Some examples of games are described in greater detail below. Players can select buttons **60** to pick cards in a hand or displayed cards, for example. Likewise, trivia or quiz-type games are popular in bar type environments, where trivia from a range of subjects can be posed as questions for players and where players can select specific buttons **60** which correspond to displayed multiple choice answers; or players might speak an answer in a microphone if game apparatus includes a speech recognition device. In addition, video games which allow high player involvement can be implemented on game unit **50**. Memory games, timed games, knowledge games, and sports games such as basketball, golf, and the like can be provided, as well as other types of video games.

In one embodiment, game processor **14** can include a well-known microprocessor such as a Pentium-based microprocessor, as well as additional components necessary to implement popular computer platforms. Software that can be implemented on the Pentium microprocessor can thus be provided on multi-use game unit **50**. This allows a wide variety of available games to be provided on game unit **50**.

Preferably, the player can select one of several offered games to play using player controls **54**; the monetary amount required to play a certain game can vary depending on the type of game selected.

Multi-use game unit **50** is also ideally suited for linked or networked game play utilizing a communication device **24** as described with reference to FIG. **1** to create a multi-apparatus game system. A single game unit **50** can be linked with one or more other game units **50** to allow multiplayer games, as described in greater detail below. For example, game unit **50** can include a "network computer" which typically includes lower cost components than stand-alone PC's and which can utilize processors and software over a network to do many of computing tasks for the user of the computer. When provided as a network computer, game unit **50** can be initially provided as a stand-alone device which is not networked, and then eventually can be easily upgraded to intra-site and inter-site gaming systems, as described with reference to FIG. **3**.

In addition, universal tickets can be won and dispensed from game unit **50** similarly to the embodiments described above. A prize selection menu, as described below with reference to FIG. **6**, is also well suited for game unit **50** since the player can easily select a desired prize from available lists or menus displayed on screen **56** using track ball **62**.

FIG. **3** is a block diagram showing an embodiment **100** of the present invention for implementing networked game units with the redemption system of the present invention. Individual game units **10***a* and **10***b* are described above with reference to FIG. **1**, and may take the form of game unit **50** of FIG. **2** in appropriate embodiments. Each game unit **10***a* and **10***b* accepts monetary input **104**, such as coins, tokens, a debit card, a credit card, smart card, or other forms of monetary or validated input. Each game unit **10***a* and **10***b* allows a player to participate in a game of skill implemented on the game unit after the monetary input is received. Each game unit **10***a* and **10***b* is also preferably capable of dispensing an award **106** to a player in accordance with his or her performance in the game. This performance is typically indicated by a game score. Such award can be a specific prize ticket or coupon, universal tickets, smart card electronic data, etc. Alternatively, awards can be provided in other ways as described herein.

Each game unit **10***a* and **10***b* may be coupled to a server **108** by a bus **110**. The server **108** can be a separate device or apparatus which includes a controller such as a microprocessor and/or a storage device such as a hard disk drive, memory devices, etc. Server **108** can include a microprocessor similar to game unit **10** described above, and may also include input and output devices. For example, the server can be one or more personal computers, "workstations", mainframe computers, or other types of computer or processor. The game units can be electrically coupled by cables or wires and otherwise be physically separated from the server, or the game units can be physically coupled to the server. The game units can include appropriate network software to implement required communication protocols, as is well known to those skilled in the art.

Alternatively, the server **108** can be provided in one of the game units **10**, or a server can be included in each game unit **10** and linked to each other by busses **110**. Additional game units **10** can also be coupled to the server similarly to game units **10***a* and **10***b*. Game units **10***a* and **10***b* can alternatively be directly coupled to each other without the use of a server **108**.

In addition, one or more separate prize selection units **11** can also be coupled to server **108** and/or to game units **10***a* and **10***b* in the game system **100**. Unit **11** allows a player to select a prize in the redemption system using prize credits won from playing a game in the redemption system. Unit **11** can be an apparatus similar to game unit **10** or **50** except that it need not offer any games for players to play. The prize selection unit **11** can receive a player's prize credit information from server **108** or a game unit **10***a* or **10***b* and display a prize selection menu on a display screen as described with reference to FIG. **6**. The player can select one or more prizes using input controls of the prize selection unit, such as a track ball, mouse, buttons, keyboard, etc. The prize selection unit can then dispense a specific prize ticket, order a prize from a prize distributor, dispense a prize from its own storage area, etc. Alternatively, the unit **11** can include a reading apparatus that accepts a storage medium from a player, such as a smart card. The unit can thus read a player's prize credits from the storage medium and allow a player to select a prize.

In one embodiment of FIG. **3**, the game units **10***a* and **10***b* and server **108** are an "intra-site" gaming system, i.e., the units and server are provided at a single location or gaming environment. For example, a local area network (LAN) can be implemented at the particular site to link only those game units at that site, and where the server **108** is a central computer or game apparatus that stores central data and coordinates prize information, networked game processes and/or tournaments. Or, existing phone lines or other network lines can be used to connect to a dedicated server that is used only to implement the games and tournaments at the single site. For example, a server **108** can be accessed by game units **10***a* and **10***b* using a modem and phone lines or TV cable lines, but the server **108** need not be connected to a large scale network (such as the Internet). Also, the game units and server can be networked at a single site using an "Intranet" that utilizes the same well-known protocols of the Internet, which is discussed in greater detail below. This allows Intranets to use same or similar server machine software and client machine software as are used in Internet applications.

Server **108** is used to coordinate games among one or more individual game units and/or provide information to linked game units. For example, the server can be used to control a networked game, where players on separate game units are simultaneously competing. For instance, a first player playing a first person point-of-view virtual reality video game on one game unit **10***a* can interact in "real time" with a second player of a second game unit **10***b* who is also playing the same game. The first player can view a computer-generated object that is controlled by the second player, and vice-versa. Alternatively, "non-real-time" games with players taking turns can be provided. The implementation of such networked games is well known to those skilled in the art. Many players can be included in such a networked game, from 2 to hundreds or even thousands of players. Players can simultaneously compete to first achieve a goal or a predetermined task in the game that will win them a specific prize ticket or universal tickets from dispensers **20** or **22**. Server **108** can also be used to store a variety of games in electronic form and to download a game to a game unit **10***a* or **10***b* when that game is selected by a player of the game unit. The game would then typically be executed locally to the game unit **10***a* or **10***b* by game processor **12**. Alternatively, if the network transmits data quickly enough, the server **108** can execute a game and send and receive appropriate data between the server and game units.

Alternatively, game system **100** can be provided as an "inter-site" system, where one gaming environment or "site" can be linked to game units **10** at other gaming environments or sites (such as a bar down to the street, or a bar across the world) to allow additional numbers of players to interact and/or compete in networked games, tournaments, etc. Thus, for example, server **108** with game units **10***a* and **10***b* at one site can be linked to a different server **108** and game units at another site. For example, game units **10** or **50** at different sites can be conveniently linked through a private wide area network (WAN) or an existing global network such as the Internet and/or the World Wide Web (described below), where the communication between different game apparatuses is accomplished using telephone lines, ISDN lines, direct-connect data lines, fiber optic lines, cellular phone or pager wireless receiver/transmitter devices, and/or other types of communication devices and channels. The network can be a standardized network, such as Ethernet, and the game apparatuses can communicate using well known network protocols, such as TCP/IP, IPX, or other standards. Each site may include its own server **108** which is linked to servers **108** at other sites. Also, each server may be linked to one or more centralized servers at "central sites" which can coordinate information, rules, etc. between sites. Alternatively, each site may include only game units that are connected to one or more centralized servers located external to the game environments at different sites.

For example, a server **108** can be provided at each site and additional sites where games are desired to participate in the present prize redemption system, networked game, or tournament. Each server can send periodic update signals to other linked servers so that each server has the most current information regarding prizes, the state of a game, the number of participants in a tournament, the current tournament score, or other related information.

Game units **10***a* and **10***b* can likewise be linked to other types of computing and electrical devices through communication devices **24**. Centralized servers **108** can monitor and coordinate games for several game units. A network connection to an existing large scale network allows the game units **10** to be additionally used as terminals for players or other members of the public to access information over the network. For example, track ball **62** of game unit **50** can conveniently be used by a player to move a cursor displayed on screen **54** to select different links to the World Wide Web, to either play a game or access information-related services.

The networked game units **10***a* and **10***b* and server **108** can be used to implement a centralized prize distribution system in the redemption system of the present invention. A list of available prizes and their prize costs can be stored on a server **108** or a centralized server **108** as described above, and this information accessed by game units **10***a* and **10***b* when needed. A prize selection menu can be retrieved by game units in the redemption system, as described in greater detail below.

The game system **100** can also be used to provide networked games between players of different game units **10** such as the real-time and non-real time games described above. In one embodiment, a new player might approach a particular game unit **10** and view a list of players displayed by game processor **12** which are currently playing games on game apparatuses that arc linked to the particular game apparatus. The new player can select a game in that list to join that networked game or start up a new networked game of his own and wait for additional players to join.

Game system **100** is also well suited to implement tournament games. In one embodiment, a tournament can be implemented on a single game unit **10**, where players successively play games on the single game unit **10**, and where each player's score or performance is stored, for example, in memory such as RAM **30** or on a different storage device coupled to the single game unit. Servers **108** are also well-suited for tournament game embodiments. The single game unit **10** can be coupled to a separate tournament server **108**, or the tournament server can be physically included within the game unit **10**.

In another embodiment, linked or networked game units **10***a* and **10***b* provide a much larger base of participants in a tournament. A player may participate in the tournament from any game unit **10***a* or **10***b* that is connected to other game units in the tournament. Game units **10***a* and **10***b* in a tournament can be provided at and linked together at one site as described above, and can also be linked to server **108**. Similarly, other game units at different sites can also linked together and/or to a server **108**. Server **108** may coordinate prizes between game units, or determine a tournament prize **112** at the conclusion of a tournament, similar to the embodiment **100** described above.

The tournament is over after predetermined conditions have occurred, which is described in greater detail below with respect to FIG. **7**. A tournament prize **112** is provided to winning players of the tournament who are determined according to predetermined rules or methods as described with respect to FIG. **8**. The tournament prize can be cash, physical prizes, tickets or other vouchers (such as specific prize tickets), or other types of awards. The tournament prize can be dispensed to the player through an award-dispensing device of an individual game unit **10**, or provided to the player externally. For example, an operator of the game tournament can manually provide the tournament award to the winning players. Alternatively, a player may be remotely awarded the tournament prize from a prize distributor, e.g., the player can be sent prizes through the mail or delivery service, a player's bank account can be credited, etc.

FIG. **4** shows a second embodiment **100'** of networked game system **100**. System **100'** includes a wide area network (WAN) such as the Internet **130**, and a number of game units **10** coupled to the Internet **130**. For example, a first game unit **10***a*, a second game unit **10***b*, and a server **108**, are coupled to the Internet **130**. Multiple servers **108** can also be provided with access to Internet **130** which are accessible by other computers and components connected to the Internet.

The Internet **130** includes a number of nodes **132** that are interconnected by data transmission media **134**. These nodes are typically routers, switches, and other intelligent data transmission apparatus which route "packets" of TCP/IP information to the desired destination. In some instances, the nodes **132** can comprise an Internet service provider (ISP) **136** which allows a client machine to access the "backbone" of the Internet. Alternatively, client machines and web servers can be coupled directly into the backbone of the Internet. The nodes **132** are most commonly routers built, for example, by Cisco Systems of San Jose, Calif. The Internet service providers **136** are typically computers such as workstations.

Game units **10***a* and **10***b* can be coupled to the Internet **130** with a suitable communication device, such as a network interface, telephone modem, cable modem, etc. The game units **10***a* and **10***b* can be considered, in the language of the Internet, to be "resources," and game unit can include its own unique Uniform Resource Locator or "URL." In one embodiment of the present invention, a client machine, such as game unit **10***a* or **10***b*, sends a request for information,

such as current prize costs, tournament score etc., residing on, for example, server **108**. In some embodiments, the information on a server **108** or game unit **10** can be publicly available to anyone with Internet and World Wide Web access; for example, the current tournament standings or prizes provided by a game provider or operator can be posted on a "web page" on the world wide web. A game unit or other requesting machine can send a connection request and a URL which specifies the address of the web page to the server **108**. The server **108** then sends a web page written in, for example, HTML format back to the requesting game unit or client machine, where it is "cached" in the memory (typically the RAM, hard disk, or a combination of the two) of the game unit or client machine. In this embodiment of the invention, the image on a video display of the game unit or client machine can be generated from the HTML web page file cached on the client machine. For example, a client machine can use a web browser such as Netscape from Netscape Communications or Internet Explorer from Microsoft Corp.

A game unit **10***a* or **10***b* may also request information such as a prize selection menu, as described below with respect to FIGS. **6***b* and **6***c* . The prize selection menu can be implemented as a "web page" in HTML or other standard formats. The most recently-updated prizes and their prize costs would be downloaded to client game units with the web page so that players could select desired prizes using prize credits won during previous games. This embodiment is suitable for game units **10***a* and **10***b* that are situated in public places as well as non-public places such as the homes of players. In addition, game unit **10***c* can be coupled to Internet **130** similarly to game units **10***a* and **10***b*. Game unit **10***c* can be coupled to another game unit **10***d* by a LAN or other communication network.

In other embodiments, other well-known Internet protocols or languages can be implemented on servers **108**, game units **10** and client machines. For example, information can be sent in Java from Sun Microsystems, ActiveX from Microsoft, and/or the Virtual Reality Modeling Language (VRML) in addition to HTML.

Using Internet **130** or a similar WAN, players at home can participate and interact in network games, prize redemption systems, and tournaments with players that are playing a game unit at a particular gaming environment such as a bar or arcade. In another aspect, a first game unit, such as game unit **10***a*, and a second game unit, such as game unit **10***b*, may directly communicate with each other in standard TCP/IP protocol over the Internet **130**. More particularly, game unit **10***a* can send information to the URL of the game unit **10***b*, and the game unit **10***b* can send information in standard TCP/IP packets to the URL of the game unit **10***a*. In this way, players of game unit **10***a* and game unit **10***b* can directly interact in games over the Internet **130**. Of course, a server **108** can likewise directly communicate information to a game unit **10***a* or **10***b*, or both units and the server can all interact.

FIG. **5** is a flow diagram illustrating a preferred process **250** of the present invention for implementing a redemption system of the present invention on one or more individual game units **10** in the process of playing a game. The present process is also suitable for the embodiments of the game system **10** described with reference to FIGS. **3** and **4**, and can also be applied to other embodiments as desired. Process **250** can be implemented by game processor **12** or other processors coupled to the game unit.

The process begins at **252**, and, in a step **254**, the process checks whether monetary input has been detected, such a coin(s), token, credit card, debit card, etc. Game processor **12** preferably stores monetary input in various categories so the operator can determine the amount of money earned by different games in particular time periods, and whether tournaments or single games earned more money. If no monetary input is detected, the process continues to check for monetary input. Once monetary input is detected in step **254**, the process continues to step **256**, where a game and/or information selection from the player is received and the appropriate selected game is selected from memory by the game unit **10**. For example, in one preferred embodiment, the game console **50** as shown in FIG. **2** offers several types of games that can all be played on the same console **50**. In other embodiments, only one type of game is offered per game unit. Information can also be selected about the offered games, prizes, events, etc.

One example of a display shell **270** on display screen **56** of the game console is shown in FIG. **5***a*. A number of options and displays are provided for a player, including game selections **272**, a main display window **274**, and other information options **276**. A player can select a game by pressing a touch-sensitive screen at the location of the game buttons **272**, or by moving a pointer over a game selection with track ball **62** or other control and pressing a button **60**, for example, to select the desired game. Available games of the described embodiment include arcade action type games, in which a player's dexterity may influence the outcome of the game and thus may influence the game score; card games, in which cards can be provided randomly and a player can select and arrange cards according to game strategies; and quiz games, in which a player is typically provided questions to answer. Combinations of these types of games and a variety of other types of games can also be provided. Other available games can be displayed and selected using arrows **273**. Visual feedback from a selected game is preferably displayed in main display window **274** and can also be displayed in other windows or areas of display screen **56**. In other embodiments, electromechanical games can be provided, in which game action is implemented with moving mechanical parts or components such as directed playing pieces (balls, rings, coins, etc.), tilting surfaces, moving targets, and the like, and may or may not include a display screen **56** with a display shell **270**. Such electromechanical games can include coin or ball roll down games, basketball games, rotating pointer games, etc.

Initial display **270** also shows a number of other controls **276** which a player may similarly select to obtain information about other aspects of the redemption system. Help button **278** provides information to the player about how to win and choose prizes, how to accumulate prize credits, how to play the various offered games, etc. High scores button **280** provides the high scores of players for each type of game that has played on the displaying game console **50**. Tourney leaders button **282** displays a screen of the current tournaments being provided and the current leaders in those tournaments. The tourney leaders screen is described with reference to FIG. **8***a*. Win cash button **284** provides the player with instructions and options on how to win money playing games. Other win and prize information can be similarly provided. The collect prize button **286**, when selected, provides a player with a prize, such as a specific prize ticket, universal redemption tickets, or an actual prize. A prize display screen in connection with button **286** is described in greater detail with respect to FIG. **6***a* .

Other displays are also provided on initial display screen **270**. Game credits display **288** displays how many game credits the player has left and which typically corresponds to

how much monetary input the player has provided (e.g., number of coins). Each game credit is equal to a fixed monetary value, such as 25 cents. Typically, each game offered on game unit **10** requires a predetermined number of game credits to play, and this number can vary depending on the type of game played and the options selected for a game. In some embodiments, a player can store game credits and retrieve/use game credits from previous game sessions if a "game credit account" is implemented for the player, similar to the prize credit account described subsequently. Also, bonus or free game credits can be provided in a variety of circumstances, such as inserting a $5 bill into the game unit, previously winning a game credit prize, as a promotional exercise, etc.

Prize credits display **290** shows the number of tickets (also referred to as "prize credits" or "ticket credits" herein) that the player has won. These prize credits may have been won by the player after the most recent game or during the current game session, and/or can include prize credits stored up over previous game sessions. A "game session" is a continuous use of the game unit by the player and may include one or more games played; for public game units, the game session may end when the player leaves the game unit. For implementations on a single game unit **10**, prize credits may have been won by the player during previous game sessions when playing the game unit and which the player did not exchange for a prize (i.e., the player is "saving up" prize credits). In some embodiments, the individual game unit can store these previously won prize credits in a "credit account" with a player ID (name, address, ID number, etc.) In networked embodiments such as shown in FIGS. **3** and **4**, the server **108** can store the prize credits won by a player over previous game sessions and can send this information to an individual game unit when requested by the game unit, e.g., when the player associated with a credit account plays a game on the game unit. Thus, a player can access his or her credit account by playing any individual game unit connected to the server that stores that player's credit account information. In multi-server embodiments, the multiple servers can communicate the credit account information to each other so that the player can access his or her prize credits from any linked game unit.

Two or more players can also play games simultaneously, alternating, etc. on a game unit **10**. In such a case, each player can be provided with a separate prize credit display **290** to indicate that player's winnings (and also a separate game credits display **288**, if desired). Alternatively, the multiple players can compete for a single prize credit amount shown in display **290**.

Initial display **270** also includes a display window **292** which can provide the player with messages concerning prizes, options, tournament information, etc. For example, a message can scroll through the window in a right-to-left direction. Specific prizes winnable during a particular game can also be advertised or displayed in window **292**. Main window **274** can also display game or prize related information, advertisements, promotions, etc. when no games are being played (or during game play, if desired).

A credit betting selector **271** allows a player to "bet" additional game credits for a game to potentially increase the number of prize credits won for a game. For example, each time the player selects selector **271**, the game credits applied to a particular game can be increased by 1. Preferably, the more game credits a player applies towards a game, the greater the potential award. For example, 2 game credits applied to a game that normally only requires 1 will double the player's prize credits won for a particular game score. In other embodiments, the second applied game credit might triple, quadruple, etc., the prize credits won.

In alternate embodiments, the player may also be required to input some form of identification to access certain features of the game unit **10**, such as a credit account storing previously-accumulated prize credits, a tournament, prizes to be sent to the player's address, etc. One convenient way to receive the player's identification is to require that players provide monetary input in the form of a credit card, debit card, ATM card and PIN number, smart card, etc. which includes an electronic form of identification. Alternatively, a player can enter a password or other ID using input controls **16**.

Referring back to FIG. **5**, once the game and information selection is made by the player in step **256**, the process continues to step **260**, where the process checks for a redemption-type selection from the player. In the described embodiment, the player is offered a choice as to prize options when playing a game. The player can either choose to play a prize credit game (i.e., non-tournament game), where the player receives prize credits and/or specific prizes based on the score and other outcomes of the game; or, the player can choose to participate in a tournament when playing the selected game. In the described embodiment, a tournament player does not receive any prize credits based on game score but instead competes for a tournament prize with other players in the tournament, i.e., the player's score is placed on a tournament list of scores. If the player chooses the prize credit game, the process continues to step **264** to implement the credit game. This is described in greater detail with respect to FIG. **6**. If the player chooses the tournament game, the process continues to step **266**, where the tournament game is implemented. The tournament game is described in greater detail with respect to FIG. **7**. The availability of specific prizes and tournament play on the game unit **10** tends to cause greater player interest and involvement and thus increases the game's earnings. In other embodiments, a player can win prize credits and specific prizes during a tournament game as well as a prize credit game. After step **264** or **266**, the process returns to step **254**.

In some embodiments, players can also be required to meet certain conditions before participating in a credit game or a tournament. For example, a player can be required to play a predetermined number of games (e.g., 5) on a game unit **10** before being allowed to participate in a tournament. A certain percentage of the money received from this predetermined number of games can be allocated to purchasing prizes for the winners or top players of the tournament. The number of times the player has played can be stored with a player identification on a storage device or in memory or at a central database accessible by game apparatus **100**. Alternatively, the player must play the required number of games at one sitting before being allowed to participate in the tournament. Or, the player might be simply required to input a minimum amount of game credits (equivalent to playing a predetermined number of non-tournament games) to participate in a tournament.

An example of a selection screen allowing the player to choose the type of redemption game is shown in FIG. **5***b*. Main window **274** displays information about the selected game, which in this example is "Quiz Show." By selecting one of the buttons **304**, the player can select a prize credit game or a tournament game (the 1 and 2 player buttons preferably both select credit games). Other information can also be provided, such as a jackpot amount **306**. As described in U.S. Pat. No. 5,292,127, a progressive bonus

jackpot can be available to a player who achieves a progressive goal during a game. The jackpot amount **306** informs the player how many prize credits would be won as a progressive bonus award when a progressive goal is achieved during the game. The progressive bonus award was contributed to by previous players of game unit **10** and/or other linked game units. In some embodiments, the player can choose an option whether to play a game having a progressive bonus award available, or play a game not having a progressive award. The information displayed on main window **274** about a game, such as shown in FIG. **5***b*, can also be provided when the player selects the help button **278**.

Between or during games, game units **10** such as game console **50** can display other information, such as promotions or advertisements. Such advertisements can include still shots, animation, movies, sound, etc. For example, FIG. **5***c* shows a promotion for the bar advertising a particular future event at the bar to promote further interest from players. Other similar promotions can include, for example, a "happy hour" when products are free or reduced in price, a sporting event such as a football game, etc. Preferably, the game unit **10** provides a simple interface to allow the operator to easily input promotional information.

Advertisements sponsored by companies, prize providers, or other sources can also be displayed and, in another aspect of the present invention, can be directly related to prize or game information. For example, FIG. **5***d* shows a beer advertisement for a particular sponsor. This sponsor may have contributed to prizes available to players on the advertising game unit **10**, so that the advertisement has a direct relation to prizes and can thus increase the effectiveness of such advertising. For example, windows **274** and/or **292** can display promotions such as "Win 25% off a six pack of beer!" which might be won as a specific prize during a game on game unit **10**. A dispensed specific prize ticket can include a bar code which the player can exchange as a coupon in a store to receive the stated discount on that particular brand of beer. A sponsor might also supply free games for players in exchange for displaying advertisements, or may simply pay the game operator for advertising time. Thus, using the linked advertising and prize redemption system disclosed herein, multiple revenue streams from advertisers are offered to a game operator and also offer the sponsors more effective advertising.

FIG. **6** is a flow diagram illustrating the prize credit (non-tournament) game implementation of step **264** of FIG. **5**. The process begins at a step **320**, and in step **322**, a game process is implemented. Once the player selects a start control, the game begins and proceeds according to a standard game process as modified by player input. For example, in a "Scud Attack" game, oncoming missiles are displayed on display screen **56** which the player attempts to destroy using track ball **62** and buttons **60**, as is well known to those skilled in the art. In a solitaire game, cards are displayed on the display screen **56** and the player selects cards to place over other cards according to the rules of the game. In a quiz game, the player answers displayed questions using buttons **60** or other input controls. Many other types of games can also be provided as game unit **10** for use with the redemption system, such as mechanical roll down games, target games, etc. In step **324**, the process checks if the game is over; if not, the game process is continued in step **322**.

Once the game is over, the process checks in step **326** whether the player has won a specific prize (the process can also check for specific prize winnings during the game). If no specific prizes have been won, the process continues to step **328** to credit tickets (or prize credits) to the player or to the player's account, if such is implemented. The amount of prize credits already in the player's account were accumulated during previous games played by the player. The prize credits won from the current game are added to any existing credit balance and the total is displayed to the player. As described above, the credit account can be implemented on storage devices such as memory, hard disk, etc. either local to the individual game unit or on a connected server that links multiple game units. In some embodiments, a connected server **108** can be used only for credit account functionality, or it may also be a tournament server having tournament functionality. In the examples of FIGS. **5***a* and **5***b*, the total prize credits available to the player is displayed in window **290**. In other embodiments, the player only accumulates prize credits during a single play session that continues as long as the player has additional credits to play (e.g., the player can insert additional monetary input during or between games to continue accumulating prize credits during a single play session).

FIG. **6***a* illustrates an example display of score and prize credits (shows as "tickets") won by a player after a game is over. The score **362** of the game is displayed, followed by an optional speed bonus **364**, which provides a modification to game score based on the time taken to play the game. For example, in some types of games, the shorter the time taken to complete a goal, the greater is the skill of the player. A score of higher value is awarded to reflect this necessary higher skill. In the described embodiment, a multiplier is applied to the score to achieve a total score **366**. The total score is converted to a number of prize credits or tickets **347** that the player won; for example, a predetermined number can be divided into the total score to achieve a number of tickets that is about equivalent to the player's score in terms of prize value in the scale of prizes offered by the redemption system. The number of game credits played **370** is the amount of monetary input provided by the player to play a single game; in the described embodiment, the number of game credits inserted for a game acts as a multiplier for the tickets won from that game. Thus, the total number of tickets **372** is the number of game credits **348** multiplied by the won tickets **347**. The total number of tickets **372** can be added to any preexisting ticket balance of the player, if appropriate. In alternate embodiments, there need not be a conversion of score points to prize credits; a game can simply have a game score in terms of prize credits or tickets.

In next step **330**, the process checks whether the player wishes to choose a prize with his or her prize credits. If not, the player can simply end his or her game, with the newly-won prize credits added to his or her credit account that is stored on the game unit or a server (if applicable). Alternatively, the player can be dispensed a record, medium, or physical token in step **332** which allows them to retain their winnings externally to the game unit and redemption system. For example, as in traditional redemption game arcades, the player can be dispensed a number of paper tickets proportional to the game score and/or proportional to the total prize credits won. Alternatively, the player can be dispensed a printed form, receipt or stub by a printer which indicates the amount of prize credits won. In yet other embodiments, the player can insert some form of electronic, optical or magnetic storage medium, such as a debit card, magnetic disk, etc., into an appropriate reading device on the game unit. The amount of prize credits can then be written on the storage medium by the game unit and the player would retrieve the medium. Once the player received a

record of their prize credit winnings, the game unit would no longer have any record of those winnings. These latter methods may be the only way for a player to save up prize credits in embodiments that do not provide a stored credit account for each player. The process is then complete at **342**.

If, in step **330**, the player wishes to choose one or more prizes with his or her prize credits, then the process continues to step **334**, where a prize selection screen is displayed. This screen provides a list of prizes that are available to players within the redemption system of the present invention. The prizes are defined and organized completely within the system of the game unit so that the operator does not have to display physical prizes to players in the gaming environment in a separate booth or dispenser. In gaming systems that incorporate both game units **10** and servers **108**, the prizes are organized within the system of game units and any connected servers. After the player has won prize credits, the player can conveniently select one or more prizes from a list presented on the screen, where all the information necessary is provided to the player. Thus, all redemption of prize credits for prizes is performed electronically. This allows an operator to have much greater influence and control over the prizes that are available and the desired profitability of the redemption games. For example, the redemption system of the present invention allows players to select their prizes on the same game apparatus which the player played the game, and thus allows the system to automatically and continuously update prize costs and specific prize win ratios according to monitored player performance to maintain a desired profitability of the game units. The prize system is described from the system's and operator's point of view with respect to FIG. **9**.

The prize selection menu is preferably displayed on the display screen of the game unit **10** or **50**, but may also be displayed on output devices of other apparatuses, such as prize selection unit **11**, server **108**, client machines to the Internet, etc. When game unit **10** is a electromechanical game or other game typically not including a display screen, then a player will typically be required to select prizes from a separate unit **11** or similar device.

In step **336**, the player inputs a selection of one or more prizes from the displayed list. Preferably, the player can select a desired prize using a touch screen, track ball **62**, pointer, or other input device. Once the prize selection is received, step **337** is implemented, in which a specific prize ticket is printed and provided to the player and the process is then completed at **342**. The specific prize ticket preferably includes a depiction of the prize or prizes selected by the player. Multiple prizes can be depicted on a single specific prize ticket, or a separate specific prize ticket can be dispensed for each prize selected. Thus, in effect, the prize selected by the player through prize credits can be considered a specific prize or "instant prize" at this point in the process. Specific prizes are described in greater detail with reference to co-pending parent application Ser. No. 08/628,490. The specific prize ticket may be redeemed at an appropriate exchange center for the actual prize. For example, a prize exchange booth can be provided at a gaming environment such as an arcade or bar, where an operator keeps an inventory of prizes and exchanges appropriate prizes for specific prize tickets. In other embodiments, the player can insert a card having the specific prize ticket information into a vending machine. In still other embodiments, the player can mail the specific prize ticket to a prize distributor.

Alternatively, the prize information describing which prize the player has selected is not printed on a specific prize ticket but is instead electronically routed to a distributor or to a dispenser directly over a network or other communication link. For example, in some embodiments, prizes can be delivered to a player from a central prize location, such as a warehouse. The selected prize information could thus be sent out via a network from the game unit to eventually be accessed by the prize distributors, who would send the desired prize to the player's address or would send the prize to the location where the player played the individual game unit so that the player could pick up the prize. Alternatively, the specific prize information can be written in electronic form to a medium such as a card, disk, etc., where the player can remove the medium and claim prizes at a different apparatus able to read the medium.

If the player has won a specific prize or "instant prize" in step **326**, then the process continues to step **338**, where the specific prize won is determined and displayed. Specific prizes can be provided in a variety of different ways. Specific prize goals during a game can be offered to allow the player to win a specific prize (rather than prize credits) by achieving a goal requiring skill (dexterity, experience, etc.) of the player, such as moving a controlled object to a specific target, choosing a particular combination of cards, etc. Alternatively, a specific prize goal can be met based partially or wholly on random or statistical chance. The specific prizes that can be won during a game are preferably displayed to the player so that the player knows how to win the specific prizes. Also, once the player has achieved a specific prize goal, the actual specific prize won can be determined in predetermined fashion or randomly from a prize table or other list of multiple possible specific prizes. The determination of a specific prize from a table is described in greater detail with respect to FIGS. **9** and **9***a*. Specific prizes and winning specific prizes are described in greater detail in co-pending parent patent application Ser. No. 08/628,490.

After or as the won specific prize is displayed in step **338**, a specific prize ticket is dispensed to the player in step **340**, which is described above with reference to step **337**. The specific prize ticket includes a designation, such as a written description and/or picture of the prize won, so that the player may redeem the specific prize ticket for the desired prize. The process then continues to step **328** as described above.

It should be noted that a player may win both a specific prize ticket and may also win prize credits during a game of FIG. **6**. For example, the player can achieve a specific prize goal during a game and win the specific prize, as well as scoring points and adding to game score to win prize credits. Thus, after (or during) a game, the player can receive a specific prize in steps **337**, **338** and **340**, and also choose a prize in steps **334** and **336** based on prize credits won.

In alternate embodiments, actual prizes can be dispensed from the game unit **10** or from a dispensing apparatus that is located in the gaming environment. If available prizes are all small toys, cards, or the like, then the prizes can be stored in the dispenser and an appropriate prize corresponding to the player's selection can be dispensed.

FIG. **6***b* illustrates an example of a prize selection menu used in step **334** of FIG. **6**. Main display window **274** provides a list **344** of prizes and also includes a prize cost or value **347** for each displayed prize. Additional prizes that may not fit within the dimensions of the display screen **56** can be viewed by selecting page controls **345**. In the described embodiment, a prize is identified by a text name/description in a table format. In other embodiments, other text information related to the prize can also be provided, as well as pictorial descriptions of prizes, as shown in FIG. **6***c*.

A player can select any of the prizes for which he or she has enough prize credits as shown by window **346**. Preferably, indicators **343** are provided to indicate which prizes can be "purchased" by the player with his or her current prize credit balance. Indicators **343** can take a wide variety of forms in alternate embodiments. A player selects a prize item using an input device, after which the selected prize is highlighted or marked to distinguish it from the other prizes in the list, as shown by highlighted prize **348** and check box **349**. The player indicates to the game unit that a selection is finalized by selecting the collect prize button **286**.

In the preferred embodiment, the entire list of available prizes is displayed regardless of whether the player can afford the prizes with his or her current prize credits. This allows the player to view the whole range of prizes and decide whether to redeem a prize at the present time or to save prize credits and, after playing additional games, redeeming a prize of greater worth with a greater number of prize credits. In another embodiment, only prizes which the player can afford with his or her current prize credit balance are displayed by the game unit.

In other embodiments, a hierarchical prize menu system is implemented, in which categories of prizes are initially displayed and allow a player to select categories and sub-categories within the categories to narrow the choice of available prizes. For example, a player might select a "sporting goods" category to have a choice of sports prizes such as basketballs or other balls, athletic shoes, sporting goods equipment, etc., and then select a sub-category of "baseball" to narrow the choices to baseball-related prizes. This is useful when a large number of prizes are offered by the redemption system.

In response to the selection of a prize by the player, the game processor **12** in a preferred embodiment commands the dispenser **22** to print out a specific prize ticket **62** that may be exchanged for the selected prize (and, preferably, no other prize). Thus, by allowing a player to select prizes using the game unit **50**, no physical universal tickets **60** need be dispensed to the player. The only physical ticket needed by the player is the specific prize ticket **62** that can be exchanged for the actual prize. Alternatively, if the player does not want any of the displayed prizes, the player can opt to receive an amount of physical tickets from dispenser **22** or **20** equivalent to the prize credits won by the player. Or, the player might decide to use prize credits to "buy" additional games on a game unit **10**, e.g., convert prize credits to game credits. Those bought game credits can then be stored in a "game credit account", if desired.

In addition, the operator can easily reconfigure the prize list **344** as required. For example, if a particular type of prize is out of stock, the operator can remove that prize from the list **344** so it is not offered to players. If a new type of prize is being offered, the operator can add prize items to the list **344**. Adjustment of prizes is described in greater detail with respect to FIG. **9**.

The prize list **344** offers advertisers a way to link available prizes to advertisements displayed on the game unit. For example, a particular brand of fast food might be advertised on display screen **54** between games and promoted by informing players that that brand of food is available as a prize for playing the game. When prize list **344** is displayed after a game, items of the advertised brand of food, such as "McDonald's Big Mac" or "Burger King Whopper", are presented as selectable prizes, thus enhancing the advertising effect on the player.

In some embodiments, the player can optionally select a "save tickets" option in the prize selection screen (or the prize credits are saved in the player's account automatically), which will store the amount of prize credits won on a local or a remote storage device as well as identification information to associate the winnings with that player (name, address, etc.). For example, the prize credit information can be stored in a special account for the player that is kept by the operator of the gaming environment, by a more centralized service, or by the player himself on a writeable medium such as a smart card or printed ticket. When the player next plays a game apparatus that has access to the amount of prize credits previously won, the player can add any present winnings to previously stored winnings in the account and thus be able to exchange the combined amount of prize credits for a more valuable prize.

FIG. **6***c* shows an example graphical prize selection menu **350** for an alternate embodiment of the present invention that allows a player to select prizes from game unit **50**, **10**, or other embodiments disclosed herein. Menu **350** can be displayed on display screen **56** or a different output device of the game unit.

Menu **350** portrays various prizes that are available to be exchanged for prize credits. Each prize can be displayed in its own selection box **352**. A description **354** of each prize can include the name of the prize and/or any other information related to the prize. Pictorial information **356** preferably portrays each prize accurately and realistically to the player. Prize costs **358** preferably indicate the required number of prize credits to be redeemed for the player to receive the prize. The player can preferably select a displayed prize by moving a cursor or indicator onto a box **352** or otherwise marking a specific box **352**. For example, a currently-selected box **352***a* can be shown highlighted, in a different color, in inverse video, etc. The player can press a button **60** or other controls to select the desired prize. Or, the player might select a control such as arrows **360** to display a different "page" of prizes on the display screen **56**. The menu **350** can be displayed in a variety of formats and layouts in other embodiments.

In other embodiments of graphical prize menu **350**, a 3-D environment can be simulated for the player to "explore." For example, a menu implemented in VRML over the Internet can allow a player to enter 3-D "rooms" and view 3-D visual representations of prizes as they would realistically appear.

FIG. **7** is a flow diagram illustrating step **266** of FIG. **5**, in which a tournament game is implemented. Tournaments can be implemented using a single game unit **10** or using networked game units as described above. Players from gaming environments in several different locations can thus interact or compete simultaneously in offered games, or over a predetermined time period during which the tournament is open to players. Such large scale networked tournaments can be administered and provided by services completely independent of the local gaming environment operator. For example, an independent tournament organizing service can implement a tournament from a central server computer that is linked to the participating game apparatuses. The local operator might get a percentage of the proceeds from the tournament for allowing game units **10** at his location to participate. The various options concerning tournaments as discussed below can be adjusted by the operator or prize provider, preferably by using a tournament table as shown with respect to FIG. **9***a*.

The process begins at **382**. In step **384**, at least a portion of the monetary input from the player is directed to a

tournament prize. The tournament prize is contributed to by all the players in the tournament. Thus, since it represents multiple contributions, the tournament prize can be worth much more than any specific prize a player might win from a single game, similarly to a progressive bonus score described above. For example, a game may cost $1 that the player inputs into the game. A portion of this monetary input, such as 50 cents, is applied as a fee to play the game, like a normal redemption or arcade game. The other portion, 50 cents in this example, is applied to the tournament prize. Thus, each time this particular game is played in the tournament by any player, 50 cents is contributed to the tournament prize. This type of apportioning of the cost of the game allows part of the earnings of the game to be provided to the owner of the arcade or other location where the games are made available to the public, and also lets part of the earnings be apportioned to a tournament prize provider, who can be a separate entity from the arcade owner or operator.

In yet other embodiments, the tournament prize value can be increased or determined using other or additional criteria besides monetary input. For example, the tournament score's value might be based on the number of players in the tournament, the duration of the tournament, a predetermined number, the number of goals achieved during the tournament, etc.

The tournament prize can be an actual physical prize, such as a computer, stereo, etc.; or the tournament prize can be in a form of currency, such as prize credits, vouchers, or cash that are exchangeable for other prizes. For example, the tournament prize can be indicated in terms of monetary units, such as dollars and cents. In other embodiments, the tournament prize can be expressed as a number of points that have a correspondence to the amount of monetary value contributed to the tournament score by the game unit **10***a* or **10***b*. For example, every dollar of monetary value contributed by a game unit can be expressed as **10** points of tournament prize. Or, a tournament prize can be expressed in terms prize credits used on the individual game units **10***a* and **10***b*, allowing a winning player to select prizes using a game unit's usual prize selecting mechanism, described above with reference to FIGS. **6**, **6***b* and **6***c*.

Since the tournament prize may be continually growing, its value must continually be updated so that players will know the most current prize value for which they are competing is displayed by the game unit. For tournaments implemented on one game unit, the only contributions in the tournament are received on that game unit, so the tournament prize is simply increased when a player on that game unit joins the tournament. On multi-game systems, the current tournament prize information is sent out to all the individual game units able to participate in the tournament. One or more servers can be used as described above, or game units can be interconnected and relay any updates to the tournament prize to each other.

In next step **386**, a game process is implemented by the game unit, similar to step **322** of FIG. **6**. In step **388**, the process checks whether the game is over. If not, step **386** is implemented until the game is over. In next step **390**, the results of the game and any other necessary information is added to a tournament list. The tournament list preferably includes all the players in the tournament by name or other identification and their associated game scores. In other embodiments, additional information can also be stored in the tournament list which can be used to help determine a winner or to provide statistical information for the operator of the tournament. For example, the time the player took to play a game, the number of times a player has participated in similar previous tournaments, etc.

If a server **108** is being implemented, then the tournament list is typically stored on the tournament server. The game unit thus sends the game score to the tournament server over a network link. If the tournament is being implemented on a single game unit, the tournament list can be stored locally on that game unit.

In some tournament embodiments, a player's identification need not be known. Each game score can be stored in the tournament list with an associated ID verifier that is assigned to the game score by the game unit or linked server. The ID verifier can be a number, word, symbol, etc. that is randomly generated or determined according to a predetermined pattern. Once the ID verifier is determined, it is displayed to the player so that the player can later claim their game score. For example, a ticket can be dispensed to the player with the ID verifier on it. Once the tournament is over, the ID verifiers of the tournament-winning scores can be advertised, and the winning players can claim the tournament prize by presenting their ticket or by otherwise providing their winning ID verifier to the prize provider.

In other tournament embodiments, the tournament list of scores may only include the top n game scores, where n is a predetermined number of winners. In such an embodiment, a game score is not stored on the tournament list unless it is greater than (or equal to) the lowest winning game score already on the tournament list. Thus, the player need not provide any identification if his or her game score is too low. If a player's game score currently qualifies to be on the tournament list, the player can provide identification. For example, the player might then enter his or her name, initials, etc. using an input device. Of course, later player's scores might cause previously-qualifying scores to be removed from the list when the previous scores are no longer high enough.

In step **392**, the process checks whether the tournament is over. An individual game unit **10** can check for tournament conclusion by, for example, sending a request to a tournament server **108**, which checks the tournament conditions and can send a response back to the individual game unit. Or, tournament conditions can be checked by a game unit implementing a tournament solely on that game unit.

There are several conditions which can be set by the tournament operator to cause a tournament to conclude. A tournament can conclude based on time duration, number of players that have entered the tournament, amount or worth of the tournament prize, when a predetermined game score has been reached by one or more players, when a predetermined number of goals have been reached in participating games, when players/game units from predetermined locations have participated, when an event outside the tournament occurs (e.g., a football season ends, a world series concludes, etc.), when a predetermined number of minimum scores are achieved by participants in the tournament, or other conditions; or, a combination of two or more of these conditions can be applied.

For example, in a tournament server embodiment, a predetermined number, "n", of players can be allowed to participate in a tournament. When the last allowed player has finished a game, the tournament can be concluded. The tournament server **108** can store the number of tournament participants who have already completed their games and thus can easily determine when the nth player has participated. Other conditions can also be checked; for example, a tournament might conclude based on a condition of time duration of the tournament, where the expired time since the tournament began can be checked in step **392** (such a check

can also be made periodically by the game unit regardless of player activity on the game unit). For example, a tournament might last one week, and then automatically end.

If the tournament is over in step **392**, then the process performs step **394**, where the tournament is concluded as detailed with respect to FIG. **8**. The process is then complete at **396**. If the tournament is not over, then the process **380** is complete at **396**.

FIG. **8** is a flow diagram illustrating step **394** of FIG. **7**, in which a tournament is concluded. The process begins at **400**, and in a step **402**, the tournament score is assigned to the top player or players in the tournament list. Preferably, a predetermined number of the players with highest score in the list have "won" the tournament. For example, the top three players, as shown below in FIG. **8***b*, can be awarded portions of the tournament prize.

The tournament prize can be divided among the top tournament players in a variety of ways. In one embodiment, a predetermined proportion of the tournament prize is provided to the top players; for example, first place receives 60%, second place receives 30%, and third place receives 10% of the tournament prize. The operator or tournament organizer can preferably alter these percentages as desired, as shown in FIG. **9***b* below. Alternatively, the proportion can be determined by the difference between the top players'scores. For example, if the second place player's score is very close to the first place player's score, the tournament prize can be divided almost equally between these two players.

In step **404**, the tournament results are communicated to individual game units that participated in the tournament. These tournament results can be viewed by players to see who won the tournament. Game operators and/or tournament prize providers are also informed which players receive the tournament prize. Players may be required to return to the game unit **10** on which they played to see the tournament results and to determine if they have won the tournament. Alternatively, the player might check any game unit (or computing device) that was linked to the tournament information through network connections.

Winning players can actually receive their portion of the tournament prize in several ways discussed above. For example, the prizes can be sent to the winners, collecting the prize at the location where the game was played, receiving prize credits to select a prize using the prize menu, etc. A player that wins a tournament can also receive a specific prize ticket that can be exchanged for a valuable prize, such as a bicycle or $200 worth of merchandise at a related retailer. The tournament prize offers another way for advertisers on game units **10** to provide brand-related prizes to players and to enhance the advertising effect on players. For example, a bicycle company might advertise their particular brand of bicycle as a tournament prize.

In step **406**, the tournament prize or score is reset. The process is then complete at **408**.

In other embodiments, after a tournament is concluded, a player may be required to play additional games to determine a winner as, for example, in elimination-type tournaments where players compete in successive rounds and are eliminated from the tournament after losing a predetermined number of games.

FIG. **8***a* is a tournament standings display screen which is preferably displayed by the individual game unit after a selection of the tourney leaders button **282** or after a tournament is complete. The tourney leaders button **282** is shown highlighted in FIG. **8***b* to indicate that it has been selected. Main display window **274** displays a number of players, scores, and prizes for different games. For example, a tournament for the game "Scud Attack" is currently ongoing, and the window **274** lists the three players **420** who have so far achieved the highest scores in the tournament, the game scores **422** for each of the players, and the cash prize **424** that each player would win if the tournament were to conclude with the current standings. In alternate embodiments, winners of a tournament can win prize credits or other prizes instead of cash. When the tournament has concluded, the main window **274** preferably displays "TOURNAMENT ENDED" or similar information to indicate that a player cannot join the tournament. Similar tournament standings are displayed in window **274** for the game "Super Solitaire." Tournament standings for other games can be displayed by selecting the next and previous page indicators **426**. Preferably, concluded tournaments that have ended within a previous predetermined time period (such as within the last week, month, etc.) are still available to be viewed by later players of the game unit **10** to give them an idea what types of scores are typically achieved by players in a tournament game and the amounts or types of prizes won by players.

FIG. **9** is a flow diagram illustrating a process **440** of the present invention for allowing the operator of the game redemption system to adjust prize characteristics of the system. This process can be implemented on a game unit **10** utilizing the game processor **12** and other components; or, this process can be implemented on consoles, computers, or other terminals separate from the game unit. The separate unit can then provide the prize table and other information to individual game units **10** over a network or other communication link; or, the operator can manually transport the prize information over a medium such as a magnetic disk or other storage medium. The process begins at **450**, and in a step **452**, a prize table is displayed for the operator.

FIG. **9***a* is a diagram of an example of a prize table **480** for use with the present invention that is displayed to the operator in step **452**. The prize table **480** is preferably displayed by a display screen such as screen **56** of game unit **10** or **50** so that the operator can adjust prize characteristics for that game unit and any linked game units, if desired. Alternatively, the prize table can be displayed on a separate operator terminal, computer, server, or game unit that may be linked to game units **10**. In such a system, the operator would modify the prize characteristics as desired and send any updated characteristics to all linked (or all desired linked) game units over a network or other communication device.

Prize table **480** of the described embodiment includes a list of available prizes **482**, an actual cost **484** of each prize in list **482**, the prize value **486** for each prize in list **482** in terms of prize credits or tickets, the specific prize win percentage **488** for each prize in list **482**, the prize credit global payout percentage **490**, and the specific prize win percentage **492**.

Prize list **482** includes a text name of each prize the operator wishes to include in the redemption system. Preferably, the operator can simply select a field of the table and enter a new prize name, change an existing prize name, or delete existing prize names. The operator can input this information using such input devices as a keyboard, pointer mechanism, stylus, tablet, etc. Preferably, the operator lists prizes from the least worth to the most worth; or, the system can automatically sort the prizes in a preferred order. In alternate prize table embodiments, the operator can enter additional text description for a prize, such as physical

dimensions, systems or standards with which the prize is used, color, or other characteristics. In still other embodiments, the operator enter a graphical description of a prize, such as a bitmap or other pictorial data format. For example, the operator can upload a graphical file to the redemption system from a personal computer. This would be more suitable for a redemption system having a graphical prize selection screen for players, as shown in FIG. **6***b*. In some embodiments, the operator can provide descriptions of particular brands of prizes in prize list **482** in exchange for advertiser money. The operator might also input specific advertisements to be displayed on game unit **10** and associate those ads to items in the prize list **482**. In such an embodiment, for example, the game unit **10** can examine each prize item in prize list **482** and check if each prize item has an associated advertisement. If so, the advertisement can be displayed between or during games, along with the prize credit cost of the associated prize, if desired.

Actual cost field **484** lists the cost of the associated prize which the operator or prize supplier has purchased and/or which the operators sells. For example, a pizza may be sold to players for $15.00 in a particular gaming environment, but the actual cost to the operator for making the pizza may be $3.00, which is the price the operator would input to the table. Similarly, the operator or prize supplier may be able to purchase prizes in bulk for a significant discount, and that discounted price would be provided in the fields **484**.

Prize cost field **486** lists the amount of prize credits that a player must pay to receive or purchase the prize associated with the prize cost. These costs are displayed directly on the prize selection screen as described above. For example, to win a small pizza, a player must have at least 600 tickets or prize credits in his or her account, and to win a video game console, 20,000 tickets are required. Thus, more expensive prizes can be won less often since they require greater amounts of prize credits to purchase. Expensive prizes such as a video game, bicycle, etc., typically cannot be bought from prize credits won at one game session (unless, e.g., a progressive bonus score is received or they are won as specific prizes), so players will have to save up prize credits for these prizes as discussed above. In the preferred embodiment, the prize costs listed in fields **486** are determined by the redemption system based on other information that the operator has input, such as actual cost and global payout. This is described in greater detail subsequently. In addition, the operator may enter a particular prize cost he or she wants to be associated with a prize, and other appropriate fields in prize table **480** are automatically adjusted by the redemption system, as discussed below.

Specific prize win ratio fields **488** list the individual prize ratios of winning the associated prizes as a specific prize or an "instant prize" during a game implemented by the game unit **10**. In one embodiment, each ratio indicates that the particular specific prize will be won every n^{th} game played on the game unit in which a specific prize goal was met, where n is the number listed in the fields **488**. For example, if a specific prize goal must be met to win a specific prize, then the specific prize is awarded every n games in which the specific prize goal was met. The specific prize goal may be met by skill of the player during a game (e.g., hitting a specific target or getting a certain score), by random chance (e.g., a 10% chance each time a game is played to win), or by a mixture of skill and chance.

Higher valued prizes are won less often than lower valued prizes. For example, a small pizza will be won every 120 games played, while a video game console will be won every 4000 games. Since only one of the specific prizes should be awarded each time a specific prize goal is met, the system preferably examines each prize in turn, starting with the most valuable prize in the specific prize list **482**. For example, whenever a game is played on game unit **10**, a game counter is incremented. When a player wins a specific prize after a specific prize goal is achieved in a game, the video console prize is first checked, i.e., the system checks whether the current game is the 4000th game (where the goal was met) since the video game console was last awarded to a player on this game unit **10** (or the 4000th game since console was awarded within the entire redemption system, i.e., among multiple game units **10**). If so, the console is awarded. If not, the next most valuable prize in the table (e.g., the T-Shirt) is similarly checked. This continues until a prize in the table is selected. If none of the prizes are selected, then no prize can be awarded, or a default prize can be awarded as the specific prize; for example, in the described embodiment, 10 prize credits (equivalent to the average number of prize credits given out in a game) are awarded as a default prize. Alternatively, the ratios can indicate that a particular specific prize will be won every n^{th} game played, regardless of whether a specific prize goal was met in the games played.

Alternatively, the selection of a specific prize from the table **480** can be based on random and/or statistical determination. For example, the individual ratios **488** may indicate the chance of winning the particular listed prize when a specific prize goal is met (the goal can be met by skill, chance, etc.). The game unit can start with the most valuable prize in the list as above and determine if that prize is to be awarded by generating a random number; for example, if a random number between 1 and 4000 is "**1**", then the video game console has been won and no further prizes need be checked. If that prize has not been won, the next most valuable prize on the list is randomly checked, and so on until no prizes are left in the table to check, at which point a default prize can be awarded, or no prize at all. Specific prize selection from a table of prizes is also described in co-pending parent application Ser. No. 08/628,490. In one embodiment, the random determination of whether a particular prize is to be awarded is also modified by statistical information to create a "best fit" of prizes awarded according to the operator's desired odds; this is done to offset the sometimes undesirable results that purely random (or pseudo-random) determination provides. For example, every 8000 games, 2 video consoles are to be awarded. If it is randomly determined that a third video console is to be awarded within, e.g., the 3000th game, then a different prize can be awarded so that the desired odds are better met. For example, the next most valuable prize in the list can be awarded instead of the video console, as long as awarding the next prize would fit the desired odds for that prize.

Similar to the prize cost fields **486**, the specific prize ratios **488** are automatically determined by the redemption system based on other operator input such as actual cost **484** and the specific prize global win ratio **492**, as discussed below. Also, the operator can enter a desired win ratio **488** for a particular prize, and other appropriate fields in the prize table **480** are automatically adjusted to take into account the entered ratio. These processes are discussed in greater detail below.

The prize credit global payout percentage **490** is a separate field of prize table **480** that allows an operator to view and to change a global payout percentage based on all of the prizes in the prize list **482**, their actual cost **484**, and their purchase cost **486**. The term "payout", as used herein, is intended to refer to any transfer of monetary value given back to the player of the game apparatus or game system.

Most commonly for redemption systems, payout is in the form of prizes, but it may also be cash, unredeemed tickets, prize credits, etc. The overall payout from a game during a time period should be subtracted from the total revenue of the game during that time period to determine how much (net) profit the game made. Net profit can be further determined by subtracting any other costs accrued in providing the game from the gross profit, such as rental or purchase fees of the game unit, maintenance/repair costs of the game unit, and other costs.

The prize payout percentage **490** indicates the payout of the game unit **10** as a percentage of an operator's revenue from the game that the operator will pay back, on average, to players in the form of prize credits or prizes purchased using prize credits. For example, the 20% listed in FIG. **9***a* indicates that 20% of all base revenue from all of the games played on a particular game unit **10** will be paid back in the form of prize credits and prizes selected from prize credit winnings. In linked game embodiments, the percentage **490** can indicate that 20% of the revenue of all the games played on all of the linked game units will be in the form of payout. In the preferred embodiment, this percentage number in field **490** is entered by the operator, and the redemption system will automatically adjust the prize cost **486** to achieve that value. The operator can also select the buttons **491** to adjust the value by 1% increments. Alternatively, the operator can adjust the prize purchase cost as described above, and the global payout percentage **490** will be appropriately adjusted by the redemption system. This is discussed in greater detail below.

The specific prize global payout percentage **492** is a separate field of prize table **480**, similar to field **490**. Specific prize global field **492** allows an operator to view and to change a global payout percentage that is based on all of the prizes and prize ratios in fields **488**. The payout percentage **492** indicates the percentage of an operator's revenue from the games that the operator will pay back, on average, to players in the form of specific prizes based on the ratios in fields **488**. In the preferred embodiment, this percentage number in field **492** is entered by the operator, and the redemption system will automatically adjust the ratios **488** to achieve the percentage value. The operator can also select the buttons **494** to adjust the value by 1% increments. Alternatively, the operator can adjust the ratios as described above, and the global specific prize payout percentage **492** will be appropriately adjusted by the redemption system. This is discussed in greater detail below.

In the preferred embodiment, the operator is intended to enter desired payout percentages in fields **490** and **492**. When these two percentages are added together, the resulting percentage shows what total percentage of revenue that the operator will be paying back to players in total prize credits and prizes. The operator can thus enter desired payout percentages to fit within his or her operating expenses and desired profitability of the game units **10**. Since the redemption system will automatically adjust prize costs and specific prize win ratios, the operator need not be concerned with calculating his or her own prize costs, as in previous redemption systems.

Referring back to FIG. **9**, after the prize table has been displayed in step **452**, the process continues to step **454**, where the process checks whether the operator has adjusted the prize name list **482** or actual cost fields **484**. If so, then in step **456**, the global payout percentages **490** and **492** and the fields **486** and **488** are adjusted according to the relationships described below based on any new actual cost values entered by the operator, and the process continues to step **478**, where the process checks if the operator desired to exit the prize table. If not, the process returns to step **454**. If so, the process is complete at **476**.

If no adjustments are made in step **454**, the process continues to step **458**, where it is checked whether the operator wishes to access the tournament setup table (the tournament setup table can also be accessed directly, without accessing prize table **480**). If so, the process receives input to any of the fields in the table in step **460** and modifies the tournament characteristics accordingly. This table is described with reference to FIG. **9***b*. The process then continues to step **478**.

If no tournament table is accessed, the process continues to step **462**, in which the process checks if the operator has adjusted the prize global payout in field **490**. The operator can use a pointing device to point to the field and then use a keyboard, or select buttons **491**. If such an adjustment is made, the process continues to step **464**, in which the prize cost **486** is adjusted, if necessary, to achieve the global payout entered by the operator.

The prize cost **486** is adjusted as follows. A prize cost is calculated separately for each prize listed in list **482**. A prize actual cost, A, which is provided by the operator, is divided by the global payout percentage entered by the operator, P, where

$$R=A/P \tag{1}$$

The resulting value R represents the amount of revenue required to achieve the desired payout percentage. For example, a candy bar costs the operator $0.30. To achieve a 20% payout on each candy bar, the operator must take in 0.30/0.20=$1.50 on the game unit for each candy bar prize thus awarded.

Once the required revenue R is determined for a particular prize, then the average number of prize credits or tickets T that are known to be awarded per game is determined (average ticket payout). It is possible for the game's manufacturer to adjust game difficulty so that, on average, a predetermined number of prize credits will be awarded for each game played. For example, games often have a payout about 8–12 tickets game, averaging to about 10 per game. The difficulty and thus the average prize credits awarded per game can be adjusted using a variety of techniques that depend on the type of game being played. For example, in an action game the speed of controlled objects, response of input devices, etc., can be adjusted so that most players don't receive a score higher than a particular value. In card games, the frequencies of winning combinations of cards can be adjusted. In quiz games, the difficulty of the questions at various times during the game can be adjusted so that average players will typically win a certain number of prize credits per game. Durations of games which have a fixed duration can also be adjusted to achieve an average payout level of prize credits.

After the game unit **10** has been in use for some time, the average number of prize credits awarded per game, T, need not be estimated, but can be exactly determined and continually readjusted by monitoring each game played on the unit **10**, recording the number of prize credits awarded for each game, and then averaging over all the played games to obtain a precise prize credit payout average. Previous game data can be stored in a storage device local to the game unit **10** or on a separate medium or a remote apparatus such as server **108**. Thus, if it were found that the average game on a game unit **10** were actually paying out 12 prize credits instead of the initially estimated 10 prize credits, the prize

costs could be adjusted accordingly with the present calculation method. This provides the operator with current, accurate information about how much prizes should cost in prize credits in order for the game unit to achieve a desired profitability. By having the redemption system of the present invention incorporated into game unit **10**, this type of precise data gathering on actual ticket payout percentages is possible, thus allowing prize costs to be accurately adjusted.

Preferably, one average ticket payout level T is calculated for all games offered by game unit **10**. Alternatively, each game offered by game unit **10** can have its own T value tracked by the redemption system. For example, an action game might only award an average of 8 prize credits per game, but a quiz game might award an average of 14 prize credits per game. A separate T value can be tracked and the prize costs can be adjusted in view of the particular game that was played by the player, e.g., if a game awarding a large average number of prize credits were played, the prize costs might be slightly higher for prizes than for games having a low average number of prize credits awarded.

Once the average number of prize credits T awarded per game is known, this value can be converted to a value V using the cost per game C, where

$$V=T/C \tag{2}$$

For example, if the average number of prize credits awarded per game is T=10, and each game costs the player $0.25 (C=0.25), then 10 / 0.25=40 prize credits are awarded for each dollar inserted by the player into the game unit. V can be multiplied by the required revenue R to achieve the prize cost (PC) **486**, such that

$$PC=R*V \tag{3}$$

In the example above, a required revenue R was determined to be $1.50. Thus, the desired prize cost PC required to achieve the desired revenue R is $1.50*40=60=PC. Thus, a player must pay 60 prize credits from his or her credit account in order to receive a candy bar prize. Other prize cost results for other prizes using these example numbers and known actual costs are shown in FIG. **9***a*.

Combining the above relationships (1), (2) and (3) yields a succinct equation:

$$PC=(A*T)/(C*P) \tag{4}$$

Once the prize costs **486** have been adjusted in step **464**, the process continues to step **478**.

In step **466**, the process checks whether the operator has adjusted the specific prize global payout percentage **492**. If not, the process continues to step **462**. If so, step **468** is implemented. In step **468**, the individual specific prize win ratios **488** are adjusted to achieve the desired global percentage **492** input by the operator.

The individual ratios **488** are adjusted as follows. A formula can be used to determine the individual ratios, as shown:

$$B=M*A \tag{5}$$

where the B is the number that follows the "1 in" in the individual ratios **488** (e.g., "1 in 18", B=18), M is a multiplier, and A is the actual cost of the particular prize as shown in fields **484**. The multiplier M can be determined by another relationship:

$$M=(N*H)/(P*C) \tag{6}$$

where N is the number of specific prizes in the list **482**, P is the global payout percentage entered in field **492**, C is the cost per game on the game unit, and H is the hit ratio for specific prize goals on the game unit. The "hit ratio" is the fraction of games played, on average, in which a specific prize goal is met and thus a specific prize is won. The hit ratio can be an average chance that an independent skilled task will be completed by the player and a specific prize won; alternatively, if no skilled task need be completed to win a specific prize, then the hit ratio can be the random or statistical chance that a specific prize is awarded during a game. Initially, the hit ratio is determined by the game developer, since the game developer can adjust the difficulty of the specific prize goal so that a "hit" occurs after a predetermined average number of games similarly to adjusting average awarded prize credits.

An estimated hit ratio as determined, for example, by the game developer is initially used in the above calculation of equation (6). In embodiments having skilled specific prize goals, once the game unit **10** has been played one or more times by actual players (e.g., after 100 times), the system can automatically adjust the hit ratio to the actual win frequency determined from the players'use of the game unit **10** by, for example, storing the number of games played and the number of times the specific prize goal was hit. This is similar to the determination of average awarded prize credits T in step **456** above. For example, if it is determined that the specific prize goal was hit 11 times over 100 games, then the hit ratio is more accurately provided as 11% rather than the 10% initially estimated. This actual hit ratio would then be used in the calculation of equation (6).

As an example, the operator enters a specific prize global payout percentage P of 10%. The number of specific prizes N in table 480 is 10, the cost per game is $0.25, and the hit ratio is 10%. The multiplier M of equation (6) is thus determined as (10*0.1)/(0.1*0.25)=40. Thus, for a small pizza having an actual cost of $3.00, B=40*3.00=120. Thus, the individual ratio **488** for the small pizza would be 1 in 120. A ratio for a larger prize such as the video game console (A $100) would be 1 in (40*100)=1 in 4000.

In the preferred embodiment, each offered game is normalized to the desired specific prize ratios based on the frequency of players achieving the specific prize goal. The redemption system may perform the normalization by applying separate hit ratios for each game offered on game unit **10**. For example, some games may have much different hit ratios than other games depending on the nature of the game action, randomness, etc. and the difficulty of the specific prize goal. The hit ratio for a specific prize should thus reflect the difficulty in achieving a specific prize goal for a particular game. In a game unit system, all the types of games offered by all linked game units in the system can have a unique hit ratio used for determining an individual ratio **488**.

A "base" hit ratio can be determined for one of the games offered on game unit **10**. The ratios stored in fields **488** of the prize table **480** can be determined based on this base hit ratio. In addition, in the described embodiment, a "normalization factor" can be stored and used for each game offered by the game unit **10** (or for each game within the redemption system or offered all linked game units). The normalization factor indicates how much an individual ratio **488** should be adjusted based on the particular game played. For example, see Table 1.

TABLE 1

GAME	NORMALIZATION FACTOR
Scud Attack	1
Solitaire	2
Quiz	0.5
Fun 21	0.33

When a specific prize goal is met by a player and the system determines the specific prize (e.g., step **338** of FIG. **6**), the game unit **10** (or server) multiplies the ratios **488** in the prize table by the normalization factor for the game played. Thus, if the played game has a hit ratio equal to one-half the base hit ratio (i.e., normalization factor=0.5), such as the "Quiz" game in Table 1, then the ratios **488** are multiplied by **0.5** before the specific prize is determined. However, when a game having a hit ratio equal to the base hit ratio is played, the ratios **488** need not be adjusted.

The base hit ratio and normalization factors can be estimated initially. After a number of games have been played on a game unit **10**, the normalization factor for each game can be based on the actual hit ratio determined for each game. The redemption system separately keeps track of actual hit ratios for each game offered on game unit **10** by recording the number of games (for each type of game) and the amount of specific prize goals met.

In some embodiments, specific prize ratios **488** are only displayed to an operator in prize table **480**. In other embodiments, the ratios **488** can be shown to players so that they can determine the odds of winning available prizes. After determining individual ratios **488**, the process continues to step **478**.

In step **470**, the process checks if the operator has adjusted the prize cost field **486** of any of the listed prizes. Operators having more advanced knowledge of offered prizes and desired prize costs are thus able to affect the profitability of the game apparatus to a fine degree. An operator may want to reduce an individual prize cost to cause that prize to be selected more often by players, thus serving to promote/advertise a prize or brand name, or reduce excess inventory of that prize. Similarly, an operator may want to increase a prize cost to cause that prize to be selected less frequently by players than other prizes. If no adjustment to prize costs is made, the process continues to step **474**. If adjustment is made, then in step **472**, the global payout **490** of the prizes is adjusted in accordance with the operator-changed prize costs. In performing this step, the same mathematical relationships can be used as described above for step **464**, except that the global payout percentage P is solved for. For purposes of this step, each prize in the table can be considered to have its own payout percentage. Thus, payout percentage P is calculated for those prizes that the operator changed the prize cost, and the unchanged prizes are assumed to have the old payout percentage. An average global payout percentage can then be obtained by adding all the individual payout percentages and dividing by the number of prizes. This average payout percentage would then be displayed in field **490** of the prize table. The process then continues to step **478**.

For example, in table 480 of FIG. **9***a*, the operator changes Video Game Consol prize to cost 10,000 prize credits instead of 20,000. An individual payout percentage for the video game console is calculated, using the relationships of step **464**, to be P=40%. The unchanged prizes each have a payout P=20%, so that the averaged payout percentage would be (9*20%+40%) /10=22%, which would be displayed in field **490** as the global payout percentage. This averaged payout percentage determined after an operator has changed prize costs is not as accurate as the prize cost-payout percentage relation obtained in step **464**, especially if players choose the prize having the changed cost more or less often than other prizes. However, the averaged percentage provides the operator with an estimate of payout that is accurate enough for most purposes.

In step **474**, the process checks if the operator has adjusted the individual specific prize ratios **488**. Similarly to the prize costs of step **472**, the operator may change individual specific prize win ratios to exert a greater degree of control over a game's or a prize's payout and profitability. If such a change is made, then in step **476**, the process adjusts the specific prize global payout percentage **492** accordingly.

In the described embodiment, the specific prize global payout is adjusted as follows. The relationships of step **468** can be arranged to solve for an individual payout P when the ratio B is changed for a particular prize. When P is solved in such a fashion, the number of prizes N is equal to 1 in Equation (6) since an "individual" payout is being calculated only for the changed prize. Once the individual payout P is known for the changed prize, it is summed with the individual payouts for the other prizes in table **480** to achieve the global win payout percentage **492**. For example, using the table **480** of FIG. **9***a*, if the operator changes the individual win ratio of the T-Shirt from 1 in 160 to 1 in 100, then the individual payout P for the T-Shirt would be (N*H*A)/(B*C)=(1* 0.1*4.00)/(100*0.25)=0.016has an individual payout of P=1% (which can be determined by dividing the global percentage **492** by the number of prizes N, or by using the relationships of step **468**). Thus, the new specific prize global payout percentage is equal to 9*1%+1.6%=10.6%, which is displayed in field **492**. The process then continues to step **478**.

If no operator adjustment is made to the ratios **488**, or after step **476**, the process continues to step **478**, where it is checked if the prize table is exited. If not, the process returns to step **454**, and if so, the process is complete at **480**.

It should be noted that, in the foregoing explanation, the process has been described as if the checking steps **454**, **458**, **462**, **466**, **470**, **474**, and **478** are serially executed. However, as will be appreciated by those skilled in the art, in practice such a serial checking method is not specifically required. Rather, in practice, the various described checking steps can be simultaneously checking for the described conditions, and functions (e.g., steps **456**, **460**, **464**, **468**, **472**, and **476**) can be call routines which are executed when called.

In the described embodiment, the prizes in list **482** are eligible to be awarded both as credit prizes and as specific prizes during or after a game played on the game unit **10**. In the preferred embodiment, the operator may also choose particular prizes to be unavailable as credit prize and/or to be unavailable as a specific prize. In the described embodiment, the operator inputs a flag, such as "0", "NA", or other symbol, in the fields associated with those prizes which the operator wishes to make unavailable. For example, if the operator does not wish to allow players to buy a T-Shirt prize with prize credits on the prize selection screen of FIG. **6***b*, the operator can put an "NA" (Not Available) symbol or characters in the field **486** corresponding to the T-Shirt. Similarly, if the operator does not wish the T-shirt to be available as a specific prize during any game, then the operator enters "NA" in the field **488** corresponding to that prize. Alternatively, separate lists **482** of prizes can be provided for credit prizes and for specific prizes.

In an alternative embodiment, prize table **480** can receive input from servers or other computers, operators, or prize

distributors (such as a "national prize center") at remote sites or nodes over a network or other communication device instead of a single operator. This received information can include the prize list **482**, actual cost **484**, and/or any other information in prize table **480**. For example, the list of prizes **482** can be sent periodically as a "prize catalog" from a prize distributor or supplier which offers an up-to-date listing of all available prizes and thus reflects the current prize inventory of the prize distributor. After receiving the list of prizes, the operator could then enter the desired global payout percentages **490** and **492**; or, this payout information can be received from a central location as well, such as a franchise headquarters. Information in prize table **480** can be stored locally, or by the central location and be downloaded when needed. After the player selects a prize from the prize selection menu, the selection information can be sent to the prize distributor over the network, and the player can be mailed his or her selected prize from the prize supplier. This may be more convenient for operators, especially when large prizes such as bicycles are won by players. If the prize is mailed, the prize supplier would typically require an address of the player where the selected prize can be sent to. The player can manually enter the requested address information in game unit **10** using an input device, or the address information might automatically be entered when the player provided monetary input to game apparatus **50** through the use of a credit or debit card or similar electronic identification. Alternatively, the prize can be mailed to the gaming environment, where the player can pick up the prize from the operator.

Such a system of receiving the list of prizes and other information from a remote source also is suitable for redemption systems having multiple linked games, such as the embodiments of FIGS. **3** and **4**. The same prize list can be provided to all games in the redemption system from a central prize database stored on a server or other storage device, thus providing uniformity of the types of prizes offered to games in a gaming environment or over a larger region.

In alternate embodiments, each type of game offered on game unit **10** can be associated with its own distinct prize table **480**, having its own desired level of payout and profitability, its own list of available prizes, etc.

The ability of the operator to change the prizes available to be won on a game apparatus in the present invention provide the operator with a great deal of flexibility in offering and coordinating a redemption system, which can be tailored to a specific type of location. For example, an operator can provide a different set of available prizes for each different type of offered game or game apparatus in one location or at different locations. Thus, a player of a card type game oriented for adults might be able to select from prizes including a deck of cards, cash, an alcoholic drink, or other related prizes, while a player of a game oriented for children might be able to select from prizes including toys, candy, or stuffed animals. Furthermore, the operator can designate particular game apparatuses in a gaming environment as "special" games that offer a specialized prize list having prizes of greater value, more selection, etc. that are different from other prizes available from other games at the gaming environment. This type of wide-ranging and differing prize availability on different games and game units in a single game environment would be far too time-consuming and complex to implement using traditional redemption systems.

FIG. **9***b* is a diagram showing a tournament setup table **490** for entering tournament characteristics by the operator, prize distributor, or other source. Table 490 includes a column **492** of the available games on the game unit **10** or in the redemption system. For each of these games, there are several characteristics listed fields in table **490** which are receptive to operator input and adjustment. Tournament On/Off field **494** allows the operator to provide a tournament option for designated games, and to turn "off" the tournament for specified games when desired. Some games may not ever be suitable or desired for tournament play, and can have a "not available" selection. Games required field **496** indicates the number of non-tournament game credits which the player is required to insert before being eligible for a tournament for that game. For example, after three game credits are inserted, the player has the option to participate in a "Scud Attack" tournament (if offered). The operator can provide a zero value in field **496**, if desired to allow players to participate in tournaments at will. Cost per game field **498** indicates the number of coins (or cents, dollars, game credits, etc.) that each game normally costs to play.

Percentage field **500** indicates the percentage of income from the player to the game unit **10** will be used as a contribution to the tournament prize. In effect, this is a "payout" percentage similar to the percentages **490** and **492** of prize table 480 showing how much of the revenue of a tournament is paid back to players, and thus allows and operator to designate a desired level of payout and profitability of the tournaments (the seed money in field **502** should also be added to the payout value to determine total payout). In the described embodiment, this percentage is the amount of cash that is contributed to the tournament prize, where the tournament prize is cash. In other embodiments, the tournament prize can be prize credits, specific prizes, or other prizes having a value, where the value of the tournament prize depends on percentage value 500.

Seed money field **502** provides the operator with a starting value of the tournament prize and may be adjusted as desired. Thus, if only a few players participate in a tournament and thus few contributions are made to the tournament prize, there will still be some incentive to win since the player can win the seed tournament prize. Place percentage fields **504** allow the operator to designate how the value of the tournament prize is to be divided up among the top players in the tournament. The operator can designate the percentage of the prize going to the first place winner, second place winner, etc. Additional place winners past 5th place can also be designated, if desired.

Start date field **506**, start time field **508**, end date field **510**, and end time field **512** indicate when the designated tournaments will be held. The operator can designate particular time periods for tournaments; when the end date and time have expired, no further players can participate in the tournament and the tournament prize is divided up among the top players. In other embodiments, additional description fields can be provided to allow the operator to designate holiday periods, sports seasons, a certain time period of every day, month, or year, or other periods that cannot be conveniently specified in a single time range. Repeat tournament field **514** allows the operator to select whether a particular game's tournament will be automatically repeated once the previous tournament has ended. Alternate fields might also be provided to designate further conditions concerning when or how tournaments will repeat.

Of course, additional fields can be provided in tournament table **490** to allow the operator to designate further characteristics of tournaments, such as additional conditions to cause a tournament to conclude (as discussed above in FIG. **7**), participation based on predefined characteristics (age,

member of a group or club, "preferred customer" status, whether they have achieved a "tournament goal" in a game, etc.), providing various skill levels or handicaps, and providing special tournaments with different prizes and conditions. As for the prize table **480**, some or all of the fields can be manually input by the operator, or remotely input by operators, a linked server, or other source.

The tournament table **490** allows the operator further control in determining available prizes, options, and profitability of the redemption system of the present invention. Furthermore, the ease of use of the tournament table **490** allows the operator to spend a minimal amount of time defining desired tournament characteristics and profitability.

While this invention has been described in terms of several embodiments, it is contemplated that alterations, permutations, and equivalents thereof will become apparent to those skilled in the art upon a reading of the specification and study of the drawings. For example, many types of games can be provided for use with the disclosed redemption system. The redemption system can be implemented on a single game unit or among multiple connected game units, with or without use of a server. Various goals can be attempted by players in a game to win prize credits, specific prizes, or tournament prizes. The provision of prizes to players can be achieved in many ways, including specific prize tickets or coupons, sending a prize to a player, or electronically indicating to an operator the prizes won and/or selected by a player. It is therefore intended that the following claims include all such alterations, permutations, and equivalents as fall within the spirit and scope of the present invention.

What is claimed is:

1. A method for providing a prize redemption system for a game apparatus, said prize redemption system being customizable by an operator, said method comprising:

receiving a prize list on a game apparatus, said prize list including names of a plurality of prizes available to be won by playing said game apparatus, wherein said game apparatus receives monetary income from players in exchange for use of said game apparatus, and wherein said players may win prize credits by playing said game apparatus;

receiving a cost of each of said prizes on said game apparatus; and

determining on said game apparatus a prize cost to be associated with each of said plurality of prizes, said prize cost being in terms of prize credits and determined in view of a desired profitability of said game apparatus, and wherein a player of said game apparatus may select one of said prizes by exchanging a number of prize credits equal to said prize cost of said selected prize.

2. A method as recited in claim **1** further comprising receiving a global payout percentage on said game apparatus, said global payout percentage indicating a percentage of said monetary income earned by said game apparatus that is to be used in providing said prizes to said players, and wherein said prize cost is determined such that said payout percentage may be approximately achieved.

3. A method as recited in claim **2** wherein said prize cost is determined using an average number of prize credits awarded per game played on said game apparatus, wherein said average number of prize credits awarded per game is determined by recording and averaging prize credits won by players over multiple games played on said game apparatus.

4. A method as recited in **3** wherein said prize costs be manually adjusted by said operator, such that said global payout percentage is adjusted by said redemption system based on said manual adjustments.

5. A method as recited in claim **2** wherein said game apparatus offers specific prizes to players when a specific prize goal is met, and further comprising receiving a global specific prize win percentage on said game apparatus, said global win percentage indicating a percentage of said monetary income earned by said game apparatus that is to be used in providing said specific prizes to said players.

6. A method as recited in claim **5** further comprising determining on said game apparatus a specific prize individual ratio associated with each of said prizes, said individual ratio how frequently said associated prize is to be awarded as a specific prize when said specific prize goal is met.

7. A method as recited in claim **6** wherein more valuable prizes in said prize table are first checked when awarding said specific prize.

8. A method as recited in claim **6** wherein said specific prize individual ratio is modified by a normalization factor based on a frequency of players achieving said specific prize goal.

9. A method as recited in claim **8** wherein said specific prize individual ratio is determined using a hit ratio describing how many times, on average, a specific prize is won on said game apparatus, wherein said hit ratio is determined by recording and averaging occurrences of players winning specific prizes over multiple games on said game apparatus.

10. A method as recited in claim **5** wherein said prize list, said cost of each of said prizes, said payout percentage, said win percentage, said prize cost, and said specific prize individual ratios are displayed on a display screen of said game apparatus.

11. A method as recited in claim **2** wherein said prize costs may be manually adjusted by said operator, such that said global payout percentage is adjusted by said redemption system based on said manual adjustments, and wherein said global payout percentage is adjusted by determining an individual payout percentage for each of said prizes and averaging said individual payout percentages to determine said adjusted global payout percentage.

12. A method as recited in claim **1** further comprising displaying advertising information on said game apparatus, said advertising information portraying a brand or a product having said brand, wherein a prize having said brand is displayed on a prize selection screen displayed by said game apparatus and may be selected as a prize by said player when said player exchanges a number of prize credits equal to a prize cost of said prize having said brand.

13. A method as recited in claim **12** wherein said prize having said brand is a discount on a price of said advertised product when purchasing said advertised product, wherein said prize is provided to said player as a coupon indicating said price discount.

14. A method as recited in claim **1** wherein said game apparatus is a bar top game provided at a bar, tavern, or restaurant environment an electromechanical game provided at an arcade environment, or a computer device provided at a home of a player.

15. A method for providing a prize redemption system for a game apparatus, said prize redemption system being customizable by an operator, the method comprising:

displaying a prize table on a display of said game apparatus;

receiving prize input from said operator which is stored on a storage medium of said game apparatus and displayed in said prize table, said prize input describing

a plurality of prizes that are to be available in said redemption system to players of said game apparatus, wherein said game apparatus receives monetary income from players in exchange for use of said game apparatus;

receiving payout input from said operator which is stored on said storage medium, said payout input indicating a desired amount of payout that said operator wishes to provide back to players of said game apparatus in terms of a monetary value of said plurality of prizes;

determining a prize cost for each of said plurality of prizes in terms of said prize credits winnable by playing a game on said game apparatus, wherein said prize cost is determined in accordance with said desired amount of payout and is stored in said storage medium;

receiving monetary input from a player on said game apparatus;

implementing a game process and receiving input from said player during said game process, wherein said player is provided with a game score based on an outcome of said game process, wherein said player is provided with a number of prize credits based on said game score;

displaying a prize selection screen on said display, said prize selection screen portraying a plurality of prizes and a prize cost for each of said prizes;

receiving a selection from said player selecting at least one of said prizes, wherein said selected prize has a prize cost less than or equal to said number of prize credits provided to said player; and

dispensing a physical indication of said selected prize to said player, wherein said player is able to redeem at least one of said prizes with said dispensed indication.

16. A method as recited in claim **15** wherein said prize table is downloaded from a remote server coupled to said game apparatus.

17. A method as recited in claim **16** wherein said remote server is coupled to said game apparatus using a local area network or a wide area network.

18. A method as recited in claim **15** further comprising a step of displaying advertising information on said game apparatus, said advertising information portraying a brand or a product having said brand, wherein a prize having said brand is displayed on said prize selection screen and may be selected as a prize by said player.

19. A method as recited in claim **18** wherein said prize having said brand is a discount on a price of said advertised product when purchasing said advertised product, wherein said dispensed physical indication is a coupon indicating said price discount.

20. A method as recited in claim **15** wherein said selected prize includes an exchange of said prize credits for game credits so that said player may play additional games on said game apparatus.

21. A game apparatus providing a prize redemption system, the game apparatus comprising:

a game processor for controlling a game on said game apparatus, said game providing a number of prize credits to a player in connection with said player playing said game;

receiving means for receiving monetary input from said player, said receiving means being coupled to said game processor;

an input device coupled to said game processor and providing commands to said game from said player;

an output display device coupled to said game processor for providing visual feedback for said game;

means for providing a prize selection menu on said display device, said prize selection menu presenting a plurality of prizes, each of said prizes having a prize credit cost which has been determined in accordance with a desired payout value of an operator of said game apparatus, wherein said player selects one of said prizes using said input device, said selected prize having a prize credit cost less than or equal to said prize credits awarded to said player; and

a prize output device coupled to said game processor for outputting an indication of said selected prize to said player such that said player may use said indication to redeem said selected prize.

22. A game apparatus as recited in claim **21** wherein said game is a game of skill.

23. A game apparatus as recited in claim **22** further comprising means for providing a specific prize goal during said game of skill played on said game apparatus, wherein at least one of said plurality of prizes is automatically won as a specific prize by said player when said specific prize goal is achieved by said player using skill.

24. A game apparatus as recited in claim **21** wherein said desired payout value of said operator is a percentage of all monetary input received by said game apparatus that said operator desires to give back to said players in terms of prizes.

25. A game apparatus as recited in claim **24** wherein said prize credits are determined based on a game score resulting from said game.

26. A game apparatus as recited in claim **24** further comprising means for selecting a prize credit game for receiving said prize credits based on said game score, and means for selecting a tournament game for competing in a tournament with other players of said game apparatus for a tournament prize.

27. A game apparatus as recited in claim **24** wherein said prize output device is a dispenser capable of dispensing a specific prize ticket portraying said prize selected by said player.

28. A game apparatus as recited in claim **24** wherein said prize output device writes electronic data on a storage medium that said player may remove from said game apparatus, said electronic data indicating said selected prize.

29. A game apparatus as recited in claim **24** further comprising a universal ticket dispenser for dispensing a plurality of universal tickets equal to said number of prize credits.

30. A game apparatus as recited in claim **21** wherein said game apparatus is provided in a bar or a restaurant gaming environment.

31. A game apparatus as recited in claim **21** wherein said receiving means includes a coin slot.

32. A game apparatus as recited in claim **21** wherein said game apparatus is included in a networked game system having a plurality of said game apparatuses and a server, and wherein said game apparatuses and server are linked using a local area network or a wide area network.

33. A game apparatus as recited in claim **21** wherein said game apparatus is included in a networked game system including a plurality of said game apparatuses and a server, and wherein said game apparatuses and server are linked using a network, wherein said prize credit costs of said selectable prizes are stored on said server and are provided to said game apparatuses over said network.

34. A method for providing a tournament game on a game apparatus, the method comprising:

(a) providing a tournament game for a player on said game apparatus;

(b) receiving monetary input from a player to allow said player to participate in said tournament by playing said tournament game;

(c) contributing at least a portion of said monetary input towards a tournament prize;

(d) implementing said tournament game, including receiving input from said player during said tournament game, and providing a game score based on an outcome of said tournament game;

(e) repeating steps (a) through (d) until said tournament is determined to have concluded; and

(f) providing said tournament prize to one or more winning players selected from participants of said tournament.

35. A method as recited in claim **34** wherein said providing a tournament game includes offering a player a choice to participate in said tournament or to play a game on said game apparatus and not participate in said tournament.

36. A method as recited in claim **34** wherein said player is allowed to participate in said tournament only after playing a predetermined number of non-tournament games on said game apparatus.

37. A method as recited in claim **34** wherein said tournament prize is in a form of prize credits awarded to said winning players, wherein a prize can be selected by a winning player using said prize credits.

38. A method as recited in claim **34** wherein said prize is selected by said winning player using a menu presented on said game apparatus.

39. A method as recited in claim **34** wherein said tournament prize is cash, and wherein said at least a portion of said monetary input is directly added to said tournament prize.

40. A method as recited in claim **39** wherein said tournament prize includes a seed monetary value to which said contributed portions of monetary input are added.

41. A method as recited in claim **39** wherein said tournament is determined to have concluded after a predetermined time period has elapsed.

42. A method as recited in claim **39** wherein said winning players are selected as a predetermined number of participants in said tournament who have achieved the highest game scores in said tournament.

43. A method as recited in claim **34** wherein a plurality of tournament games are provided on said game apparatus, and wherein said player can select a particular tournament game in which to participate.

44. A method as recited in claim **34** further comprising a plurality of said game apparatuses linked together such that players of any of said linked game apparatuses may participate in said tournament by playing a tournament game on any of said linked game apparatuses.

45. A method as recited in claim **34** wherein said prize is selected by said winning player using a prize selection menu presented on said game apparatus displaying a plurality of available prizes, wherein said tournament prize includes a plurality of prize credits usable to redeem at least one of said prizes in said prize selection menu.

46. A method as recited in claim **45** wherein said at least a portion of said monetary input contributed toward said tournament prize has a value in prize credits that is added to said tournament prize, and wherein a specific prize ticket is dispensed from said game apparatus, said specific prize ticket being redeemable for said prize selected by said winning player from said prize selection menu.

47. A method for providing a prize redemption system for a game apparatus, said prize redemption system being customizable by an operator, said method comprising:

displaying a prize table on a display;

receiving prize input which is stored on a storage medium and displayed in said prize table, said prize input characterizing a plurality of prizes that are to be available in said redemption system to players of said game apparatus, wherein said prize input includes monetary costs of said prizes, and wherein said game apparatus receives monetary income from players in exchange for allowing use of said game apparatus;

receiving payout input from said operator which is stored on said storage medium, said payout input indicating a desired amount of payout that said operator wishes to provide back to said players of said game apparatus in terms of a monetary value of said plurality of prizes, wherein said payout input includes a global payout percentage value indicating a desired percentage of said monetary income earned by said game apparatus that said operator wishes to provide back to players in the form of said prizes; and

automatically determining prize information for each of said plurality of prizes, said prize information determining how frequently said prizes are to be won by players of said game apparatus, wherein said prize information is determined in accordance with said desired amount of payout and is stored on said storage medium, said prize information including a prize cost for each of said plurality of prizes in terms of prize credits winnable by players playing a game on said game apparatus, wherein said prize cost is determined in accordance with said desired amount of payout and is stored on said storage medium, said prize costs being determined using an average number of prize credits awarded per game played on said game apparatus, wherein said average number of prize credits awarded per game is determined by recording and averaging prize credits won by players over multiple games played on said game apparatus.

48. A method as recited in claim **47** wherein said prize information is displayed in said prize table.

49. A method as recited in claim **47** wherein said prize input is received manually from said operator.

50. A method as recited in claim **47** wherein said prize table is displayed by a computer apparatus which includes said storage medium, and wherein said prize input is received from a remote apparatus linked to said computer apparatus.

51. A method as recited in claim **47** wherein said display is included in said game apparatus such that said prize table is displayed on said game apparatus, and wherein said storage medium is included as a storage device in said game apparatus.

52. A method as recited in claim **47** wherein said prize input includes text or pictorial information describing said prizes.

53. A method as recited in claim **47** wherein said operator may manually adjust said prize information to provide a desired amount of said payout.

54. A method as recited in claim **47** wherein said plurality of prizes from said prize table are provided to said game apparatus to be displayed to said players as a menu by said game apparatus, said menu allowing said players to select a prize from said menu after winning at least one prize credit by playing a game on said game apparatus.

55. A method as recited in claim **54** wherein said selected prize is provided to said player by dispensing a specific prize ticket describing said selected prize and which is redeemable for said prize.

56. A method as recited in claim **54** wherein said game apparatus is included in a system comprising a plurality of game apparatuses coupled together such that players of said plurality of game apparatuses may all choose prizes from a prize database communicated to said plurality of game apparatuses.

57. A method as recited in claim **47** wherein said game apparatus provides a specific prize goal during said game that may be achieved by skill of said player, and wherein if said specific prize goal is achieved, said player receives a specific prize.

58. A method as recited in claim **47** wherein said game apparatus is a bar top game provided at a bar, tavern, or restaurant environment, an electromechanical game provided at an arcade environment, or a computer device provided at a home of a player.

59. A method for providing a prize redemption system for a game apparatus, said prize redemption system being customizable by an operator, said method comprising:

displaying a prize table on a display;

receiving prize input which is stored on a storage medium and displayed in said prize table, said prize input characterizing a plurality of prizes that are to be available in said redemption system to players of said game apparatus, wherein said prize input includes monetary costs of said prizes, and wherein said game apparatus receives monetary income from players in exchange for allowing use of said game apparatus;

receiving payout input from said operator which is stored on said storage medium, said payout input indicating a desired amount of payout that said operator wishes to provide back to said players of said game apparatus in terms of a monetary value of said plurality of prizes; and

automatically determining prize information for each of said plurality of prizes, said prize information determining how frequently said prizes are to be won by players of said game apparatus, wherein said prize information is determined in accordance with said desired amount of payout and is stored on said storage medium, and wherein each of said prizes can be won as a specific prize on said game apparatus, said prize information including a win ratio for each of said plurality of prizes in terms of how many times said particular prize is won as a specific prize on said game apparatus, wherein said win ratio is determined in accordance with said desired amount of payout and is stored on said storage medium.

60. A method as recited in claim **59** wherein a prize is won as a specific prize when a player achieves a specific prize goal on said game apparatus, said specific prize goal being achieved by skill of said player.

61. A method as recited in claim **59** wherein a prize is won as a specific prize when a specific prize goal is achieved on said game apparatus, said specific prize goal being achieved by random chance.

62. A method as recited in claim **59** wherein said payout input includes a global win percentage value indicating a desired percentage of said monetary income earned by said game apparatus that said operator wishes to provide back to players in the form of said specific prizes.

63. A method as recited in claim **59** wherein a specific prize is randomly selected from a plurality of available specific prizes when said specific prize goal is achieved by said player.

64. A method as recited in claim **63** wherein said random selection of said specific prize is modified according to statistical information such that said win ratios of awarding said specific prizes are approximately fulfilled.

65. A method as recited in claim **59** wherein said plurality of prizes from said prize table are provided to said game apparatus to be displayed to said players as a menu by said game apparatus, said menu allowing said players to select a prize from said menu after winning at least one prize credit by playing a game on said game apparatus.

66. A method as recited in claim **65** wherein said prize information includes a prize cost for each of said plurality of prizes in terms of prize credits winnable by players playing a game on said game apparatus, wherein said prize cost is determined in accordance with a desired amount of global prize payout and is stored on said storage medium.

67. A method as recited in claim **66** wherein said player may achieve a progressive goal using skill in said game, such that if said progressive goal is achieved, progressive bonus prize credits are awarded to said player, said progressive bonus credits being contributed to by multiple players of said game apparatus.

68. A method as recited in claim **65** wherein said payout input includes a global payout percentage value indicating a desired percentage of said monetary income earned by said game apparatus that said operator wishes to provide back to players in the form of said selectable prizes.

69. A method as recited in claim **65** wherein said prize costs are determined using an average number of prize credits awarded per game played on said game apparatus, wherein said average number of prize credits awarded per game is determined by recording and averaging prize credits won by players over multiple games played on said game apparatus.

70. A method as recited in claim **65** wherein said selected prize is provided to said player by dispensing a specific prize ticket describing said selected prize and which is redeemable for said prize.

71. A method as recited in claim **59** wherein said game apparatus is included in a system comprising a plurality of game apparatuses coupled together such that players of said plurality of game apparatuses may all choose prizes from a prize database communicated to said plurality of game apparatuses.

72. A method as recited in claim **59** wherein said game apparatus is a bar top game provided at a bar, tavern, or restaurant environment, an electromechanical game provided at an arcade environment, or a computer device provided at a home of a player.

73. A game apparatus providing a prize redemption system, the game apparatus comprising:

a game processor for controlling a game on said game apparatus, said game providing a number of prize credits to a player in connection with said player playing said game, said game processor also providing a prize selection menu, said prize selection menu presenting a plurality of prizes, each of said prizes having a prize credit cost which has been determined in accordance with a desired payout value of an operator of said game apparatus, wherein said player selects one of said prizes using said input device, said selected prize having a prize credit cost less than or equal to said prize credits awarded to said player;

a monetary input device that receives monetary input from said player, said monetary input device being coupled to said game processor;

an input device coupled to said game processor and providing commands to said game from said player;

an output display device coupled to said game processor and displaying said prize selection menu and providing visual feedback for said game; and

a prize output device coupled to said game processor that outputs an indication of said selected prize to said player such that said player may use said indication to redeem said selected prize.

74. A game apparatus as recited in claim **73** wherein said game is a game of skill.

75. A game apparatus as recited in claim **73** wherein said desired payout value of said operator is a percentage of all monetary input received by said game apparatus that said operator desires to give back to said players in terms of said prizes.

76. A game apparatus as recited in claim **75** wherein said prize output device is a dispenser capable of dispensing a specific prize ticket portraying said prize selected by said player.

77. A game apparatus as recited in claim **73** wherein said game apparatus is included in a networked game system having a plurality of said game apparatuses and a server, and wherein said game apparatuses and server are linked using a local area network or a wide area network.

* * * * *

US005816918C1

(12) **EX PARTE REEXAMINATION CERTIFICATE** (10214th)

United States Patent

Kelly et al.

(10) **Number: US 5,816,918 C1**

(45) **Certificate Issued: Jun. 30, 2014**

(54) **PRIZE REDEMPTION SYSTEM FOR GAMES**

(75) Inventors: **Matthew F. Kelly**, San Ramon, CA (US); **Bryan M. Kelly**, Almo, CA (US); **Norman B. Petermeier**, Pleasanton, CA (US); **John G. Kroeckel**, San Leandro, CA (US); **John E. Link**, Tracy, CA (US)

(73) Assignee: **Arcade Planet, Inc.**, Pleasanton, CA (US)

Reexamination Request:
No. 90/006,601, Apr. 15, 2003

Reexamination Certificate for:

Patent No.:	**5,816,918**
Issued:	**Oct. 6, 1998**
Appl. No.:	**08/746,755**
Filed:	**Nov. 14, 1996**

Related U.S. Application Data

(63) Continuation-in-part of application No. 08/628,490, filed on Apr. 5, 1996, now abandoned.

(51) **Int. Cl.**
A63F 9/24 (2006.01)

(52) **U.S. Cl.**
USPC **463/16**

(58) **Field of Classification Search**
USPC ..... 463/1, 9–13, 16–20, 23, 30, 36–37, 463/40–42; 273/138.1, 138.2, 139, 440, 273/429–432; 700/91–93; 340/323 R
See application file for complete search history.

(56) **References Cited**

To view the complete listing of prior art documents cited during the proceeding for Reexamination Control Number 90/006,601, please refer to the USPTO's public Patent Application Information Retrieval (PAIR) system under the Display References tab.

Primary Examiner — Mark Sager

(57) **ABSTRACT**

The present invention provides a prize redemption system for use with one or more game apparatuses. A game is provided on a game apparatus for a player to play in exchange for monetary input, and prize credits are credited to the player based on the game outcome. A prize selection menu is then displayed by the game apparatus, the menu including one or more prizes, where the player may select a prize that has a prize cost within the player's prize credit amount. The player is dispensed a specific prize ticket that is redeemable for the selected prize. The game apparatus can also provide specific prizes and tournament games played for a tournament prize contributed to by multiple players. An operator can adjust prizes and payout percentages of the system to achieve a desired profitability for game apparatuses. Prize input is entered into a prize table describing multiple available prizes and also describing payout information that indicates a desired amount of payout that the operator wishes to provide back to players of the game apparatus in terms of the value of the prizes. Prize information, such as prize costs and specific prize win ratios, is automatically determined by the system for each of the prizes in view of the desired profitability of the game apparatus.

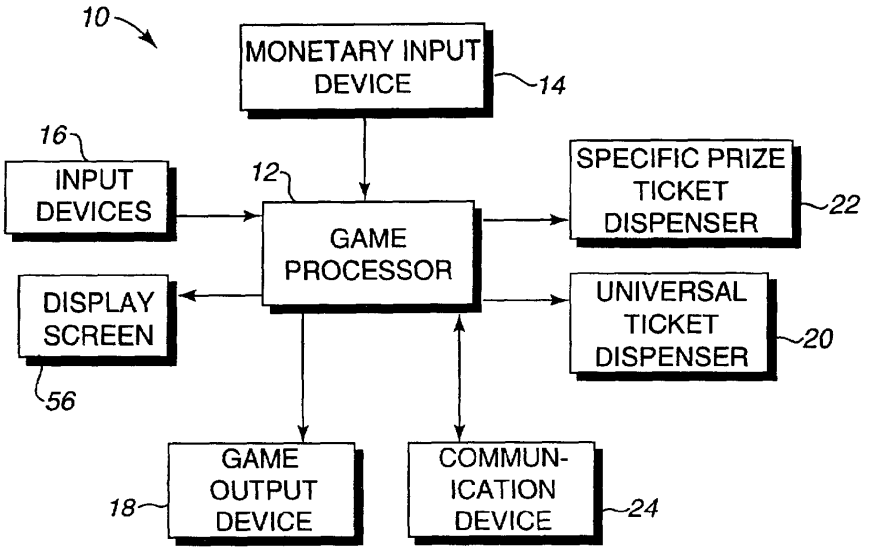

EX PARTE REEXAMINATION CERTIFICATE ISSUED UNDER 35 U.S.C. 307

THE PATENT IS HEREBY AMENDED AS INDICATED BELOW.

Matter enclosed in heavy brackets [ ] appeared in the patent, but has been deleted and is no longer a part of the patent; matter printed in italics indicates additions made to the patent.

AS A RESULT OF REEXAMINATION, IT HAS BEEN DETERMINED THAT:

The patentability of claims **1-33** and **47-77** is confirmed.

Claims **35-37** and **40-44** are cancelled.

Claims **34**, **38-39** and **45** are determined to be patentable as amended.

Claim **46**, dependent on an amended claim, is determined to be patentable.

34. A method for providing a tournament [game on a game apparatus, the method] *over a network* comprising:

(a) providing a [tournament] game [for a player] *of skill* on [said] *a computerized* game apparatus *connected to a network*;

(b) receiving monetary input from a player to allow said player to participate in [said] *a* tournament by playing said [tournament] game *as a tournament game*;

(c) [contributing] *allocating* at least a portion of said monetary input towards a tournament prize *value which is stored on a server on said network*;

(d) implementing said tournament game, including receiving input *at said game apparatus* from said player during said tournament game, and providing a game score *to said server* based on an outcome of said tournament game;

(e) repeating steps (a) through (d) *with at least one additional player* until said tournament is determined to have concluded; and

(f) [providing] *distributing* said tournament prize *value* to one or more winning players selected from participants of said tournament.

38. A method [as recited in claim **34**] *for providing a tournament over a network comprising:*

(*a*) *providing a game of skill on a computerized game apparatus connected to a network.*

(*b*) *receiving monetary input from a player to allow said player to participate in a tournament by playing said game as a tournament game;*

(*c*) *allocating at least a portion of said monetary input towards a tournament prize value which is stored on a server on said network;*

(*d*) *implementing said tournament game, including receiving input at said game apparatus from said player during said tournament game, and providing a game score to said server based on an outcome of said tournament game;*

(*e*) *repeating steps* (*a*) *through* (*d*) *with at least one additional player until said tournament is determined to have concluded; and*

(*f*) *distributing said tournament prize value to one or more winning players selected from participants of said tournament;*

wherein said prize is selected by said winning player using a menu presented on said game apparatus.

39. A method [as recited in claim **34**] *for providing a tournament game on a game apparatus, the method comprising:*

(*a*) *providing a tournament game for a player on said game apparatus;*

(*b*) *receiving monetary input from a player to allow said player to participate in said tournament by playing said tournament game;*

(*c*) *contributing at least a portion of said monetary input towards a tournament prize;*

(*d*) *implementing said tournament game, including receiving input from said player during said tournament game, and providing a game score based on an outcome of said tournament game;*

(*e*) *repeating steps* (*a*) *through* (*d*) *until said tournament is determined to have concluded; and*

(*f*) *providing said tournament prize to one or more winning players selected from participants of said tournament;*

wherein said tournament prize is cash, and wherein said at least a portion of said monetary input is directly added to said tournament prize.

45. A method [as recited in claim **34**] *for providing a tournament over a network comprising:*

(*a*) *providing a game of skill on a computerized game apparatus connected to a network;*

(*b*) *receiving monetary input from a player to allow said player to participate in a tournament by playing said game as a tournament game;*

(*c*) *allocating at least a portion of said monetary input towards a tournament prize value which is stored on a server on said network;*

(*d*) *implementing said tournament game, including receiving input at said game apparatus from said player during said tournament game, and providing a game score to said server based on an outcome of said tournament game;*

(*e*) *repeating steps* (*a*) *through* (*d*) *with at least one additional player until said tournament is determined to have concluded; and*

(*f*) *distributing said tournament prize value to one or more winning players selected from participants of said tournament;*

wherein said prize is selected by said winning player using a prize selection menu presented on said game apparatus displaying a plurality of available prizes, wherein said tournament prize includes a plurality of prize credits usable to redeem at least one of said prizes in said prize selection menu.

* * * * *