wolf greenfield
INTELLECTUAL PROPERTY LAW

Gregory F. Corbett
Gregory.Corbett@WolfGreenfield.com
direct dial 617.646.8249

July 26, 2024

VIA EDIS

The Honorable Lisa R. Barton
Secretary to the Commission
U.S. International Trade Commission
500 E Street, S.W., Suite 112
Washington, D.C. 20436

Re: *Certain Semiconductor Devices and Products Containing the Same*
Inv. No. 337-TA-

Dear Secretary Barton:

In according with the Commission's Temporary Change to the Filing Procedure, dated March 16, 2020 (85 Fed. Reg. 15798), enclosed for filing on behalf of Complainants Infineon Technologies Austria AG and Infineon Technologies Americas Corp. (collectively, "Infineon"), please find the following documents in support of Complainants' request that the U.S. International Trade Commission commence an investigation pursuant to Section 337 of the Tariff Act of 1930, as amended. This submission includes:

1. One (1) electronic copy of the verified Non-Confidential Complaint and the Public Interest Statement, pursuant to 19 C.F.R. §§ 210.8(a)(1)(i) and 201.8(b);

2. One (1) electronic copy of Complainants' letter requesting confidential treatment of the information contained in the Confidential Exhibit Nos. 32C-38C, 47C, and 67C, pursuant to 19 C.F.R. §§ 210.5(d) and 201.6(b);

3. One (1) electronic copy of the accompanying Non-Confidential Exhibits and public versions of the Confidential Exhibits, pursuant to 19 C.F.R. § 210.8(a)(1)(i);

4. One (1) electronic copy of the Confidential Exhibit Nos. 32C-38C, 47C, and 67C, pursuant to 19 C.F.R. §§ 201.6(c) and 210.8(a)(1)(ii);

5. One (1) electronic copy of the certified versions of United States Patent No. 9,899,481 ("the '481 Patent"), United States Patent No. 8,686,562 ("the '562 Patent"), United States Patent No. 9,070,755 ("the '755 Patent"), and United States Patent No. 8,264,003 ("the '003 Patent") (collectively, the "Asserted Patents") cited in the Complaint as Exhibit Nos. 1-4, pursuant to 19 C.F.R. § 210.12(a)(9)(i);

6. One (1) electronic copy of the certified versions of each of the assignments for the Asserted Patents cited in the Complaint as Exhibit Nos. 5-8, pursuant to 19 C.F.R. § 210.12(a)(9)(ii);

7. One (1) electronic copy of the certified versions of the prosecution histories for the Asserted Patents included as Appendices A, C, E, and G to the Complaint, pursuant to 19 C.F.R. § 210.12(c)(1); and

8. One (1) electronic copy of the patent and technical reference documents identified in each of the prosecution histories of the Asserted Patents included in the Complaint as Appendices B, D, F, and H, pursuant to 19 C.F.R. § 210.12(c)(2).

Thank you for your attention to this matter. Please contact me at (617) 646-8000 with any questions regarding this submission.

Respectfully submitted,

WOLF, GREENFIELD & SACKS, P.C.

/s/ Gregory F. Corbett

Gregory F. Corbett

Counsel for Complainants
Infineon Technologies Austria AG and
Infineon Technologies Americas Corp.

Enclosures

wolf greenfield
INTELLECTUAL PROPERTY LAW

Gregory F. Corbett
Gregory.Corbett@WolfGreenfield.com
direct dial 617.646.8249

July 26, 2024

REQUEST FOR CONFIDENTIAL TREATMENT

VIA EDIS

The Honorable Lisa R. Barton
Secretary to the Commission
U.S. International Trade Commission
500 E Street, S.W., Suite 112
Washington, D.C. 20436

Re: *Certain Semiconductor Devices and Products Containing the Same*
Inv. No. 337-TA-

Dear Secretary Barton:

Pursuant to Commission Rules 210.5(d) and 201.6(b)(1), Complainants Infineon Technologies Austria AG and Infineon Technologies Americas Corp. (collectively, "Infineon"), respectfully request confidential treatment of the business information contained in Exhibit Nos. 32C-38C, 47C, and 67C to the Verified Complaint.

The information contained in the Confidential Exhibits qualifies as confidential business information pursuant to Commission Rule 201.6(a) because:

1. It is not available to the general public;

2. The disclosure of such information would cause substantial harm to Infineon and to the competitive position of Infineon. Specifically, the confidential exhibits contain confidential proprietary information relating to Infineon's significant domestic investments in plant, equipment, labor, and capital relating to Infineon's domestic industry products, the exploitation of the Asserted Patents, and proprietary information relating to Infineon's patented technology; and

3. Unauthorized disclosure of the information could impair the Commission's ability to obtain information necessary to perform its statutory function.

Thank you for your attention to this matter. Please contact me at (617) 646-8000 with any questions regarding this submission.

Respectfully submitted,

WOLF, GREENFIELD & SACKS, P.C.

/s/ Gregory F. Corbett

Gregory F. Corbett

Counsel for Complainants
Infineon Technologies Austria AG and
Infineon Technologies Americas Corp.

UNITED STATES INTERNATIONAL TRADE COMMISSION
WASHINGTON, D.C.

In the Matter of **CERTAIN SEMICONDUCTOR DEVICES AND PRODUCTS CONTAINING THE SAME**	**Investigation No. 337-TA-_____**

COMPLAINANTS INFINEON TECHNOLOGIES AUSTRIA AG AND INFINEON TECHNOLOGIES AMERICAS CORP.'S
STATEMENT ON THE PUBLIC INTEREST

Pursuant to Commission Rule 210.8(b) (19 C.F.R. § 210.8(b)), Complainants Infineon Technologies Austria AG and Infineon Technologies Americas Corp. (collectively, "Infineon") submit this Statement on the Public Interest with respect to the remedial orders requested against Proposed Respondent(s) Innoscience (Suzhou) Technology Company, Ltd., Innoscience (Suzhou) Semiconductor Co., Ltd., Innoscience (Zhuhai) Technology Company, Ltd., and Innoscience America, Inc. (collectively, "Innoscience" or "Respondents").

Infineon seeks a limited exclusion order under 19 U.S.C. § 1337(d) prohibiting from entry into the United States of certain semiconductor devices and products containing the same (the "Accused Products") that infringe: claims 1, 2-4, 6, 9, and 17 of United States Patent No. 9,899,481; claims 1, 2, 8-10, 13, 14, and 15 of United States Patent No. 8,686,562; claims 1, 2-4, 8, and 9 of United States Patent No. 9,070,755; and claims 1, 2, and 10 of United States Patent No. 8,264,003 (collectively, the "Asserted Patents").

Infineon also requests a cease-and-desist order under 19 U.S.C. § 1337(d) prohibiting Innoscience and its subsidiaries, related companies, and agents from engaging in the importation, sale for importation, marketing and/or advertising, distribution, offering for sale, sale, use after importation, sale after importation, transfer within the United States, testing, repair, technical

support, or any other commercial activity related to infringing Accused Products. And Infineon seeks a bond covering any importations of infringing products during the Presidential review period. None of the Asserted Patents are declared essential to any industry standard.

The issuance of Infineon's requested remedial orders would accord with the strong public interest in protecting intellectual property rights. *Certain Baseband Processor Chips and Chipsets, Transmitter and Receiver (Radio) Chips, Power Control Chips, and Prods. Containing Same*, Inv. No. 337-TA-543, Comm'n Op. at 136–37 (June 2007). Moreover, the requested remedial orders would not have any adverse impact on the statutory public interest factors because, *inter alia*, Innoscience's Accused Products are not necessary to meet an important public health or welfare need and because other suppliers of substitute products can satisfy any shift in market demand created by the requested remedial orders. As in most Section 337 investigations, there are no circumstances in this case that would provide a basis for imposing upon the Commission, the parties, and the public the cost and burden of delegating public interest issues to an ALJ.

I. Introduction

Infineon is a world-leading designer and manufacturer of semiconductors for a variety of electronic applications, including computer and telecommunication systems, consumer goods, automotive products, industrial automation and control systems including those applications protected by the Asserted Patents. Infineon's research and development—much of it in the United States— has yielded a significant portfolio of intellectual property, including the Asserted Patents.

II. Specific Public Interest Inquiries

a. How the Accused Products Are Used in the United States

The Accused Products in this investigation are Innoscience's semiconductor devices and products containing the same ("Accused Products"). More specifically, the Accused Products are

power transistors and circuit products which are used as on/off switches or to convert electrical current from a source to the correct voltage, current, and frequency to power the load. They are used in a variety of applications, ranging from computer systems, telecommunication systems, consumer goods, automotive products, industrial automation and control systems. For example, Innoscience touts the application of its power transistor and circuit products for consumer use in power adapters, wireless charging, and audio amplification or in industrial use for motor drive/control, LED lighting, and photovoltaic energy storage systems.[1] The relevant gallium nitride (GaN) technology allows for improvements such as faster charging speeds, smaller device footprints, and lighter device weights.

b. There Are No Public Health, Safety, or Welfare Concerns Relating to the Requested Remedial Orders

The requested remedial orders would have no material impact on the public health, safety, or welfare in the United States, and the Accused Products are not essential to the preservation of any public interest. An exclusion order encompassing the Accused Products would not implicate national energy crises or national security interests. Further, the Accused Products are not medical devices, pharmaceuticals, or vaccines.

The Commission has previously found the semiconductor devices similar to those at issue in this investigation do not serve a public health, safety, or welfare purpose. *See Certain EPROM, EEPROM, Flash Memory, and Flash Microcontroller Semiconductor Devices, and Products Containing the Same*, Inv. No. 337-TA-395, Comm'n Op. at 86-87 (Dec. 11, 2000) (public interest factors did not preclude Commission from issuing exclusion order in Investigation relating to consumer semiconductor memory and microcontroller devices); *see also Certain Mobile Devices,*

[1] Innoscience Website, applications: https://www.innoscience.com/site/application?el=a1 (last accessed June 27, 2024).

Associated Software, and Components Thereof, Inv. No. 337-TA-744, Comm'n Op. at 30 (June 5, 2012) (exclusion of consumer electronics in diverse marketplace does not raise public interest concerns). More recently, the Commission declined to delegate fact-finding regarding the public interest to the ALJ in the 1366 Investigation, which involves Gallium-Nitride semiconductor products similar to the products at issue in the Complaint—some of which explicitly overlap with the Accused Products. *Certain Semiconductor Devices and Products Containing the Same*, Inv. No. 337-TA-1366, Comm'n Notice at 1-3 (June 28, 2023).

Moreover, as explained below, Infineon can provide an adequate supply of alternative power transistors and circuit products to manufacturers, customers, and consumers. Given that Infineon seeks limited remedial orders covering only articles that infringe its intellectual property rights, the adverse effect on the public would be negligible or nonexistent.

c. "Like" or "Directly Competitive" Articles Could Replace the Subject Articles if They are Excluded

There are numerous directly competitive products that could take the place of the Accused Products after the issuance of the requested remedial orders, including Infineon's own products. Infineon's products practice the patents-in-suit, can and do supply the consumer market, and are readily available to replace the Accused Products within a reasonable timeframe. Additionally, there are many third-party companies that can adequately satisfy consumer demand. Given the availability of competing products and alternative suppliers, there would be no shortage of competitive products if the requested remedial orders were to issue, and suppliers of downstream products have access to like or directly competitive articles to incorporate into their end products.

d. Competitors Would be Able to Replace the Volume of Articles Subject to the Requested Remedial Orders in a Commercially Reasonable Time

The presence of an adequate supply of substitute products obviates any public interest concerns. *See Certain Lens-Fitted Film Packages*, Inv. No. 337-TA-406, Comm'n Op., 1999 WL

436531, at *13 (June 28, 1999). Power transistors and related products are readily available in the marketplace. Infineon and other parties have substantial manufacturing, production, and shipping capabilities that are more than enough to replace any excluded articles in a commercially reasonable amount of time. As noted above, Infineon and other parties, can provide additional, directly competitive articles at a reasonable price point that could replace the Accused Products if they were excluded. This obviates any potential adverse impact of the requested remedial orders.

e. **The Requested Remedial Orders Will Have Minimal Impact on Consumers**

The issuance of the requested remedial orders in this investigation would not adversely impact consumers in the United States. As noted above, consumers would not be deprived of similar products and there would be no shortage of competing goods because Infineon's products can replace the excluded articles. Further, the Accused Products compete domestically with power transistors and circuit products from Infineon that offer comparable overall quality and features and that are available to consumers in the United States, and consumers stand to benefit from removing infringing articles from the marketplace. Accordingly, the requested remedial orders favor the strong public interest in protecting Infineon's intellectual property rights.

III. Conclusion

The public interest will be served in the event the Commission grants the requested remedial orders. The Accused Products are not necessary to any health, safety, or welfare need. Further, an adequate supply of high-quality substitute articles is available through Infineon, its licensees, and third parties. As such, the public interest in protecting Infineon's intellectual property rights heavily outweighs any potential adverse impact on the public. For the foregoing reasons, there are no public interest concerns that would preclude the Commission from issuing the remedial orders requested by the Complainant.

Date: July 26, 2024

/s/ Gregory F. Corbett

Gregory F. Corbett
Charles T. Steenburg
Bryan S. Conley
Jie Xiang
Samuel L. Doskocil
WOLF, GREENFIELD & SACKS, P.C.
600 Atlantic Avenue
Boston, MA 02210
Telephone: 617.646.8000
Fax: 617.646.8646

Elizabeth A. DiMarco
John W. McGrath
Suresh S. Rav
WOLF, GREENFIELD & SACKS, P.C.
601 Massachusetts Avenue, NW
Washington, DC 20001
Telephone: 202.571.5001

Counsel for Complainants Infineon Technologies Austria AG and Infineon Technologies Americas Corp.

UNITED STATES INTERNATIONAL TRADE COMMISSION
WASHINGTON, D.C.

In the Matter of **CERTAIN SEMICONDUCTOR DEVICES AND PRODUCTS CONTAINING THE SAME**	**Investigation No. 337-TA-_____**

VERIFIED COMPLAINT OF INFINEON TECHNOLOGIES AUSTRIA AG AND INFINEON TECHNOLOGIES AMERICAS CORP. UNDER SECTION 337 OF THE TARIFF ACT OF 1930, AS AMENDED

COMPLAINANTS:	**PROPOSED RESPONDENTS:**
Infineon Technologies Americas Corp. 101 North Pacific Coast Highway El Segundo, California 90245 Telephone: 310-726-8000 **Infineon Technologies Austria AG** Siemensstraße 2, A-9500 Villach, Austria Telephone: +43 5 1777-17178 Telephone: +49 89 234-65555 **COUNSEL FOR COMPLAINANT:** Gregory F. Corbett Charles T. Steenburg Bryan S. Conley Jie Xiang Samuel L. Doskocil WOLF, GREENFIELD & SACKS, P.C. 600 Atlantic Avenue Boston, MA 02210 Telephone: 617.646.8000 Fax: 617.646.8646	**Innoscience (Suzhou) Technology Company, Ltd.** No. 98, Xinli Road, Lili Town, Wujiang District Suzhou, Jiangsu, 215000 China Telephone: +86 1595-0454380 **Innoscience (Suzhou) Semiconductor Co., Ltd.** No. 98, Xinli Road, Lili Town, Wujiang District Suzhou, Jiangsu, 215000 China Telephone: Telephone: +86 1595-0454380 **Innoscience (Zhuhai) Technology Company, Ltd.** No. 39, Jinyuan 2nd Road, High-Tech Zone, Zhuhai, Guangdong, 519099 China Telephone: +86 0756-3819888 **Innoscience America, Inc.** 5451 Great America Parkway, Suite 125 Santa Clara, CA 95054 Telephone: (408) 502-4626

COUNSEL FOR COMPLAINANT (CONT.): Elizabeth A. DiMarco John W. McGrath Suresh S. Rav WOLF, GREENFIELD & SACKS, P.C. 601 Massachusetts Avenue, NW Washington, DC 20001 Telephone: 202.571.5001	

TABLE OF CONTENTS

I. INTRODUCTION 1

II. THE PARTIES 9

A. The Complainants 9

B. The Respondents 9

III. THE ASSERTED PATENTS AND NON-TECHNICAL DESCRIPTIONS 10

A. The ’481 Patent 10

1. Identification of Patent and Ownership 10

2. Non-Technical Description of the ’481 Patent 10

3. Foreign Counterparts to the ’481 Patent 11

B. The ’562 Patent 12

1. Identification of Patent and Ownership 12

2. Non-Technical Description of the ’562 Patent 12

3. Foreign Counterparts to the ’562 Patent 13

C. The ’755 Patent 14

1. Identification of Patent and Ownership 14

2. Non-Technical Description of the ’755 Patent 14

3. Foreign Counterparts to the ’755 Patent 15

D. The ’003 Patent 15

1. Identification of Patent and Ownership 15

2. Non-Technical Description of the ’003 Patent 16

3. Foreign Counterparts to the ’003 Patent 18

IV. SPECIFIC INSTANCES OF IMPORTATION BY RESPONDENTS CONSTITUTING UNLAWFUL AND UNFAIR ACTS 19

V. RESPONDENT’S INFRINGEMENT OF THE ASSERTED PATENTS 28

A. The ’481 Patent 29

B. The ’562 Patent 31

C. The ’755 Patent 33

D. The ’003 Patent 34

VI. CLASSIFICATION OF THE INFRINGING PRODUCTS UNDER THE HARMONIZED TARIFF SCHEDULE 36

VII. DOMESTIC INDUSTRY RELATING TO THE DOMESTIC INDUSTRY PRODUCTS AND ASSERTED PATENTS 37

A. Infineon's Domestic Industry Products Practice the Asserted Patents (Technical Prong) 37

B. Infineon's Investments in the United States Relating to the Domestic Industry Products (Economic Prong) 39

VIII. LICENSEES 40

IX. RELATED LITIGATION 40

X. REQUESTED RELIEF 41

LIST OF EXHIBITS

Exhibit	Description	Designation
1	Certified Copy of U.S. Patent No. 9,899,481	Public
2	Certified Copy of U.S. Patent No. 8,686,562	Public
3	Certified Copy of U.S. Patent No. 9,070,755	Public
4	Certified Copy of U.S. Patent No. 8,264,003	Public
5	Certified Assignment History for U.S. Patent No. 9,899,481	Public
6	Certified Assignment History for U.S. Patent No. 8,686,562	Public
7	Certified Assignment History for U.S. Patent No. 9,070,755	Public
8	Certified Assignment History for U.S. Patent No. 8,264,003	Public
9	Innoscience Website – About us – Dedicated 8" GaN-on-Si, *available at* https://www.innoscience.com/site/details/375 (Last accessed July 1, 2024)	Public
10	Innoscience APEC 2023 Presentation Excerpt	Public
11	Declaration of Robert V. White Exhibit 11.1 – E-mail confirmation of Parts Order No. 1 Exhibit 11.2 – E-mail confirmation of Parts Order No. 2 Exhibit 11.3 – E-mail confirmation of Request for Quote Exhibit 11.4 – E-mail regarding Request for Quote Exhibit 11.5 – RichardsonRFPD Quote for ISG3201 Exhibit 11.6 – E-mail regarding Purchase Order Exhibit 11.7 – Purchase Order for ISG3201 Exhibit 11.8 – E-mail Acknowledgement of Order Exhibit 11.9 – Receipt for Order of ISG3201 Exhibit 11.10 – Shipment Confirmation for ISG3201	Public Public Public Public Public Public Public Public Public Public Public
12	List of Accused Products	Public
13	Representative Claim Chart Illustrating Infringement of U.S. Patent No. 9,899,481 by Innoscience's INN650D080BS Device	Public
14	Representative Claim Chart Illustrating Infringement of U.S. Patent No. 9,899,481 by Innoscience's INN650DA190A Device	Public
15	Representative Claim Chart Illustrating Infringement of U.S. Patent No. 8,686,562 by Innoscience's INN650D080BS Device	Public
16	Representative Claim Chart Illustrating Infringement of U.S. Patent No. 9,070,755 by Innoscience's INN100W032A Device	Public
17	Representative Claim Chart Illustrating Infringement of U.S. Patent No. 8,264,003 by Innoscience's ISG3201 Device	Public
18	Innoscience Data Sheet INN650DA190A, *available at https://shop.mev-elektronik.com/wp-content/uploads/INN650DA190A_Datasheet_V1.0.pdf*, last accessed June 30, 2024.	Public
19	Innoscience Technology Website, *available at* https://www.innoscience.com/*site/technology*, last accessed June 30, 2024.	Public

Exhibit	Description	Designation
20	Innoscience Publication: Wong, R.K., *et al.*, 2021, May, "Comprehensive GaN-on-Si power device platform: epitaxy, device, reliability and application," *Semiconductor Science and Technology, Volume 36, Number 6*. IOP Publishing Ltd.	Public
21	Innoscience Data Sheet INN100W032A, *available at https://ynsk.shwebspace.com/uploads/20230315_INN100W032A_Datasheet_Rev%201.1%20Solder%20Bar.pdf*, last accessed June 30, 2024.	Public
22	Innoscience INN650D080BS 650 V GaN-on-Silicon Enhancement Mode HEMT	Public
23	Infineon-GS65011 Technical Manual	Public
24	ITC Investigation No. 337-TA-1366, Evidentiary Hearing Transcript, Day 1 (Open) (February 26, 2024)	Public
25	INTENTIONALLY BLANK	N/A
26	INTENTIONALLY BLANK	N/A
27	INTENTIONALLY BLANK	N/A
28	Alex Lidow *et al.*, "GaN Transistors for Efficient Power Conversion" (Second Edition) (2015). Wiley.	Public
29	Innoscience Data Sheet INN650D080BS, *available at https://ynsk.shwebspace.com/uploads/65868771/INN650D080BS_Datasheet_Rev1.0.pdf*, last accessed June 30, 2024.	Public
30	Guacci, M., *et al.*, 2020, September, "Experimental Characterization of Silicon and Gallium Nitride 200 V Power Semiconductors for Modular/Multi-Level Converters Using Advanced Measurement Techniques," *IEEE Journal of Emerging and Selected Topics in Power Electronics, Volume 8, Issue 3* (pp. 2238-2254). IEEE.	Public
31	Innoscience Data Sheet ISG3201, *available at https://ynsk.shwebspace.com/uploads/20230720_ISG3201_Datasheet_Rev_1.0.pdf*, last accessed June 30, 2024.	Public
32	**CONFIDENTIAL** Representative Claim Chart Illustrating the Technical Prong of Domestic Industry for U.S. Patent No. 9,899,481 (IGLD60R190D1)	Confidential
33	**CONFIDENTIAL** Representative Claim Chart Illustrating the Technical Prong of Domestic Industry for U.S. Patent No. 9,899,481 (GS-065-011-1-L)	Confidential
34	**CONFIDENTIAL** Representative Claim Chart Illustrating the Technical Prong of Domestic Industry for U.S. Patent No. 8,686,562 (GS-065-011-1-L)	Confidential
35	**CONFIDENTIAL** Representative Claim Chart Illustrating the Technical Prong of Domestic Industry for U.S. Patent No. 9,070,755 (IGLD60R190D1)	Confidential
36	**CONFIDENTIAL** Representative Claim Chart Illustrating the Technical Prong of Domestic Industry for U.S. Patent No. 9,070,755 (GS-065-011-1-L)	Confidential

Exhibit	Description	Designation
37	**CONFIDENTIAL** Representative Claim Chart Illustrating the Technical Prong of Domestic Industry for U.S. Patent No. 8,264,003 (IGT60R070D1)	Confidential
38	**CONFIDENTIAL** Representative Claim Chart Illustrating the Technical Prong of Domestic Industry for U.S. Patent No. 8,264,003 (GS-065-011-1-L)	Confidential
39	Infineon Data Sheet IGLD60R190D1, *available at https://www.infineon.com/dgdl/Infineon-IGLD60R190D1-DataSheet-v02_13-EN.pdf?fileId=5546d46269e1c019016a6d78ff5e2aba*, last accessed June 30, 2024.	Public
40	Infineon Publication: Bricconi, A., 2018, October, "How GaN-on-Si can help deliver higher efficiencies in power conversion and power management," *available at https://www.infineon.com/dgdl/Infineon-1_WhitePaper_How_GaN_on_Si_can_help_deliver_higher_efficiencies_in_power_conversion_and_power_management_EN-Whitepaper-v02_00-EN.pdf?fileId=5546d46266a498f50166c618cdb53858&da=t*, last accessed June 30, 2024.	Public
41	Infineon GaN Product Selection Guide.	Public
42	Infineon Data Sheet GS-065-011-1-L, *available at https://www.infineon.com/dgdl/Infineon-GS-065-011-1-L-DataSheet-v01_00-EN.pdf?fileId=8ac78c8c8d2fe47b018e51606b81513c*, last accessed June 30, 2024.	Public
43	Infineon (GaN Systems) GN001 Application Note: An Introduction to GaN Enhancement-mode HEMTs, *available at https://gansystems.com/wp-content/uploads/2022/03/GN001_An-Introduction-to-GaN-E-HEMTs_220308.pdf*, last accessed June 30, 2024.	Public
44	Infineon User Guide: 3600 W, 385 V to 52 V LLC DC-DC CoolGaN™ demo board using IGT60R070D1 e-Mode CoolGaN ™ (600V, 70 mΩ max) *available at https://www.infineon.com/dgdl/Infineon-Userguide_EvaluationBoard_EVAL_3K6W_LLC_GaN-ApplicationNotes-v03_01-EN.pdf?fileId=5546d46262b31d2e016368f63cbd0723* (last accessed June 30, 2024).	Public
45	Infineon Data Sheet IGT60R070D1, *available at https://www.infineon.com/dgdl/Infineon-IGT60R070D1-DataSheet-v02_14-EN.pdf?fileId=5546d46265f064ff016686028dd56526*, last accessed June 30, 2024.	Public

Exhibit	Description	Designation
46	Infineon CoolGaN™ Application Note, *available at https://www.mouser.com/datasheet/2/196/Infineon_ApplicationNote_CoolGaN_600V_emode_HEMTs_-1504876.pdf*, last accessed June 30, 2024.	Public
47	**CONFIDENTIAL** Declaration of Chris Zegarelli	Confidential
48	ITC Investigation No. 337-TA-1366, Complaint	Public
49	ITC Investigation No. 337-TA-1366, Complaint, Ex. No. 25 (Schubert Declaration)	Public
50	ITC Investigation No. 337-TA-1366, Complaint, Ex. No. 32	Public
51	ITC Investigation No. 337-TA-1366, Complaint, Ex. No. 33	Public
52	ITC Investigation No. 337-TA-1366, Complaint, Ex. No. 34	Public
53	ITC Investigation No. 337-TA-1366, Complaint, Ex. No. 35	Public
54	ITC Investigation No. 337-TA-1366, Staff's Pre-Hearing Brief	Public
55	ITC Investigation No. 337-TA-1366, Evidentiary Hearing Transcript, Day 3 (Open) (February 28, 2024)	Public
56	Innoscience Website – Innoscience Signs Global Deal with Richardson	Public
57	Innoscience Website – Where to Buy / Authorized Distributors	Public
58	Richardson Website – Richardson Suppliers – Innoscience	Public
59	Richardson Website – Sample Accused Products for Sale	Public
60	Charger Lab Article – Innoscience Booth APEC 2023	Public
61	Web Article Advertising Innoscience at APEC 2024	Public
62	APEC 2024 Event Program	Public
63	Innoscience Website – About us – Who we are, *available at* https://www.innoscience.com/site/aboutus (last accessed June 30, 2024)	Public
64	Innoscience Industry Presentation at APEC 2024 ("Efficient and compact power conversions made possible with GaN technology"), Denis Marcon, Shuilin Tian, Zhiwei Huang, Feng Huang, Sanzhong Bai, and Pengju Kong (February 28, 2024).	Public
65	Innoscience Website – Consumer Applications	Public
66	Innoscience Website – Innoscience Products and Application Notes	Public
67	**CONFIDENTIAL** List of Licensees to the Asserted Patents	Confidential

LIST OF APPENDICES

Appendix	Document Description
A	Certified Copy of Prosecution History of U.S. Patent No. 9,899,481
B	References Cited During Prosecution of U.S. Patent No. 9,899,481
C	Certified Copy of Prosecution History of U.S. Patent No. 8,686,562
D	References Cited During Prosecution of U.S. Patent No. 8,686,562
E	Certified Copy of Prosecution History of U.S. Patent No. 9,070,755
F	References Cited During Prosecution of U.S. Patent No. 9,070,755
G	Certified Copy of Prosecution History of U.S. Patent No. 8,264,003
H	References Cited During Prosecution of U.S. Patent No. 8,264,003

I. INTRODUCTION

1. Complainants Infineon Technologies Austria AG ("Infineon Austria") and Infineon Technologies Americas Corp. ("Infineon Americas") (collectively, "Infineon" or "Complainants") respectfully request that the United States International Trade Commission commence an investigation pursuant to Section 337 of the Tariff Act of 1930, as amended, 19 U.S.C. § 1337 ("Section 337") into violations of Section 337 by Innoscience (Suzhou) Technology Company, Ltd. ("Innoscience Suzhou"), Innoscience (Suzhou) Semiconductor Co., Ltd. ("Innoscience Suzhou Semiconductor"), Innoscience (Zhuhai) Technology Company, Ltd. ("Innoscience Zhuhai"), and Innoscience America, Inc. ("Innoscience America") (collectively "Innoscience" or "Respondents").

2. This Complaint is based on Innoscience's unlawful and ongoing importation into the United States, sale for importation into the United States, and/or sale within the United States after importation of certain semiconductor devices and products containing the same ("the Accused Products"). Innoscience's Accused Products infringe one or more claims of U.S. Patent Nos. 9,899,481 ("the '481 Patent"), 8,686,562 ("the '562 Patent"), 9,070,755 ("the '755 Patent"), and 8,264,003 ("the '003 Patent") (collectively, the "Asserted Patents"). Certified copies of the '481 Patent, '562 Patent, '755 Patent, and '003 Patent are attached as Exhibits 1, 2, 3, and 4, respectfully. Certified copies of the assignment records of the '481 Patent, '562 Patent, '755 Patent, and '003 Patent are attached as Exhibits 5, 6, 7, and 8, respectfully.

3. Pursuant to Commission Rules 210.10(b)(1) and 210.12(a)(12), a plain English description of the categories of Accused Products are GaN-on-Si semiconductor devices, GaN Field Effect Transistors ("FETs"), GaN high electron mobility transistors, GaN high electron mobility transistors, and products incorporating such transistors, which are discrete chips,

integrated circuits (ICs), wafers, modules, and demo boards. A non-exhaustive list of Accused Products is attached hereto as Exhibit 12.

4. Pursuant to Commission Rule 210.12(a)(9)(vii), a complete listing of the claims asserted by Infineon in this Investigation (collectively, the "Asserted Claims") is shown below, with independent claims illustrated in **bold**:

Patent	Asserted Claims
'481 Patent	**1**, 2-4, 6, 9, **17**
'562 Patent	**1**, 2, 8-10, **13**, 14, 15
'755 Patent	**1**, 2-4, 8, 9
'003 Patent	**1**, 2, **10**

5. The Asserted Patents are valid and enforceable. Infineon Austria owns by assignment all rights, title, and interest in the '481 Patent. *See* Exhibit 5. Infineon Americas owns by assignment all rights, title, and interest in the '562 Patent, the '755 Patent, and the '003 Patent. *See* Exhibits 6-8.

6. Infineon is a world-leading designer and manufacturer of semiconductors, including Gallium Nitride ("GaN") semiconductors and products, used in a variety of electronic and microelectronic applications and industries, including computer systems, telecommunication systems, consumer electronics and goods, automotive products, industrial automation and control systems, and the applications protected by the Asserted Patents. By way of non-limiting example, Infineon develops and sells power transistors, which are semiconductor devices used to amplify or switch electrical signals and power in a vast array of modern applications. Infineon also develops and sells circuits including transistor circuits and integrated circuits incorporating power

transistors together with other components. Infineon's power transistor and circuit products are used across the applications and industries discussed herein.

7. Transistors and integrated circuits are the building blocks of semiconductor technology. Power transistors are used as a switch or rectifier in power supplies (or power converters), which convert electric voltage and/or current from a source to the correct voltage, current, and frequency to power the load (i.e., a device or component).

8. For many decades, power transistors and circuits were fabricated primarily using silicon as the semiconductor material. However, such silicon-based power transistors have limitations that are increasingly tested given increasing power density and efficiency requirements and environmental pollution regulations trends. Advances in the field are dependent on the development of smaller transistors and circuits that allow for higher voltages and power at lower resistances.

9. The basic capability of a semiconductor material is dictated by the mobility of its charge carriers such as electrons. A material with high electron mobility offers greater current carrying ability, which affords significant benefits in power electronics. Examples of such materials include "III-V compounds" such as GaN incorporating an element from Group III of the periodic table of elements (such as gallium) and an element from Group V (such as nitrogen).

10. The exceptionally high electron mobility in a GaN high-electron-mobility transistor ("GaN HEMT") makes GaN a compound semiconductor material that is particularly suitable to replace silicon in power transistors to meet the growing needs with better power systems efficiency, performance, and system cost. GaN-based transistors can operate at higher voltages, frequencies, and temperatures as compared to conventional silicon-based transistors.

11. GaN power transistor applications include USB-C adapters and chargers, 48 V power distribution, server and telecom SMPS, solar and energy storage systems, motor drives, robots and drones, and more.

12. Infineon has been a world-recognized GaN HEMT innovator and market leader for years. In October 2023, Infineon further strengthened its market leading position in power semiconductors by acquiring GaN Systems Inc. ("GaN Systems"). GaN Systems brought with it a broad portfolio of GaN-based power conversion solutions and leading-edge application know-how. The GaN transistors and integrated circuits developed by Infineon's preexisting teams (i.e., before the GaN Systems acquisition) and GaN Systems have performance advantages and represent significant advances over previous generations of power semiconductors, transistors, and circuits.

13. Infineon employs teams of engineers—including teams in the United States—involved in the research and development of Infineon's patented technology covering its power semiconductor, transistor, and integrated circuit products, including products utilizing GaN technology. Specifically, within the United States, Infineon maintains facilities in El Segundo, California, and Chandler, Arizona, at which Infineon engineers engage in research and development, testing, and other qualifying activities associated with the Asserted Patents. Additional details regarding the specific activities conducted within these facilities are described in the Confidential Declaration of Chris Zegarelli. *See* Exhibit 47C.

14. Rather than develop its own non-infringing technology, Innoscience has engaged in unauthorized activities aimed at replicating Infineon's patented technology and diverting Infineon's customers away from Infineon and to Innoscience instead. By free-riding on Infineon's research and development, Innoscience competes unfairly and indeed openly touts how it "will

surpass anyone on price for an equivalent device." Exhibit 9. Innoscience has also acknowledged targeting "customers in the USA." Exhibit 9.

15. For example, the images below demonstrate the similarity between Infineon's Asserted '481 Patent and an Innoscience product that practices and replicates Infineon's patented technology.

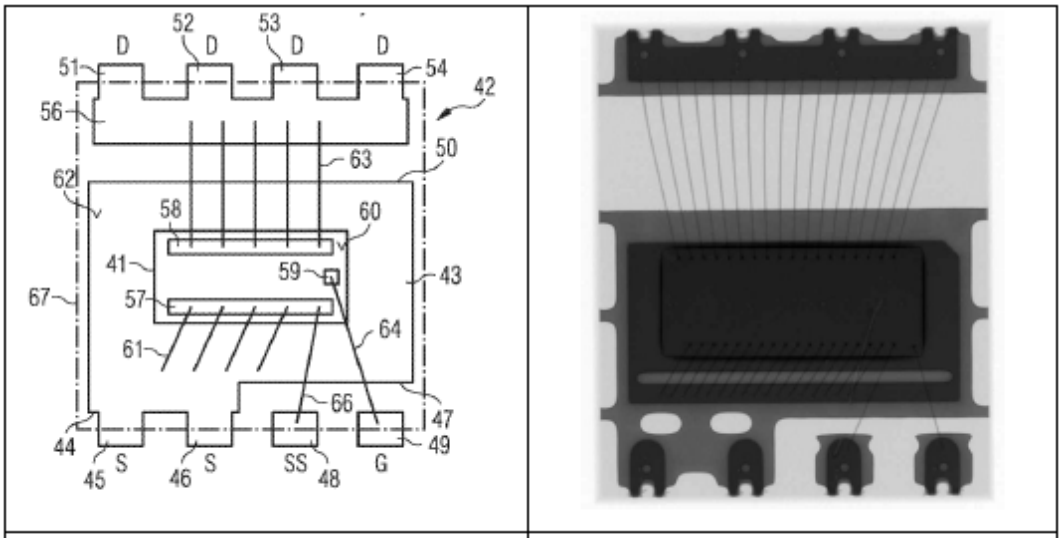

'481 Patent, Fig. 3 | Innoscience Accused Product

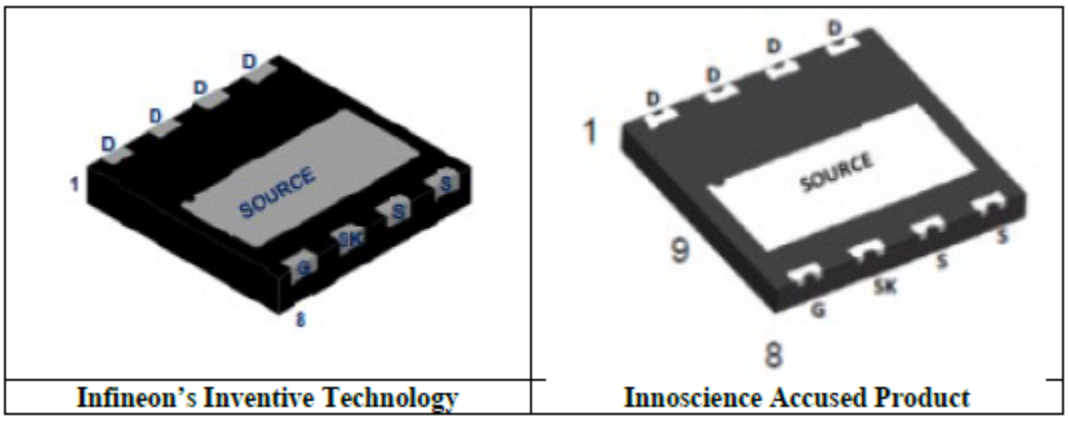

Infineon's Inventive Technology | Innoscience Accused Product

16. In fact, in a 2023 presentation at an industry session of the Applied Power Electronics Conference ("APEC") held in Orlando, Florida from March 19 to March 23, 2023, Innoscience highlighted the similarities between its product and Infineon's inventive technology in its presentation to the industry. In one slide, Innoscience compared Infineon's IGLD60R190D1

product (shown below on left) with Innoscience's INN650D190A product (shown below on right). Innoscience identified the identical pin layouts for the gate, drain, Kelvin Source, and source. *See* Exhibit 10 at 19.

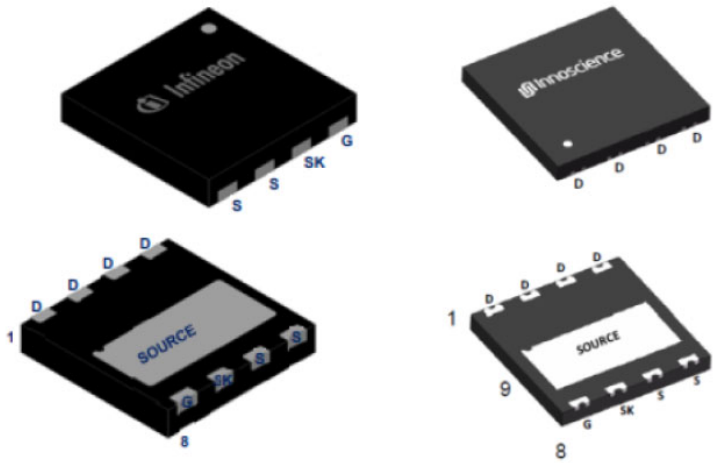

Gate	8
Drain	1,2,3,4
Kelvin Source	7
Source	5,6

Table 2 Pin information

Gate	Drain	Kelvin Source	Source
8	1,2,3,4	7	5,6,9

17. Innoscience explained to the audience, which included target customers such as "system engineers/architects and business-oriented people such as purchasing agents" (https://www.aconf.org/conf_146150.html), that Innoscience's products are "pin-to-pin compatible" with Infineon's products in the hope of inducing Infineon customers to switch to Innoscience's Accused Products. *See* Exhibit 10 at 19.

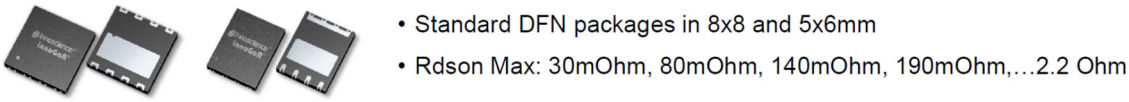

Some of Infineon and GaNSystem GaN devices are pin-to-pin compatible with Innoscience's GaN power devices and with similar specifications (and viceversa)

18. The Accused Products are manufactured abroad in China and are imported into the United States by Innoscience, and/or are sold by Innoscience abroad for importation into the United States. *See, e.g.*, Exhibits 11-11.2. By importing the Accused Products, which infringe the

Asserted Patents, Innoscience has circumvented the need to invest in expensive research and development that would be required to develop its own semiconductor power transistor technology, including technology for transistors that use GaN.

19. Infineon has invested significant and substantial resources into the development of a domestic industry relating to articles protected by the Asserted Patents. The protected articles include two types of GaN products made by Infineon: the "IG DI Products," which include at least the IGLD60R070D1, IGLD60R190D1, IGLD60R190D1S, IGLR60R190D1, IGLR60R260D1, IGLR60R340D1, IGT60R042D1, IGT60R070D1, and IGT60R190D1, and the "GS DI Products," which include at least the GS-065-004-1-L, GS-065-008-1-L, GS-065-011-1-L, GS-065-011-2-L, GS-065-018-2-L, and GS-065-030-2-L. Collectively, the IG DI Products and GS DI Products are referred to as the "Domestic Industry Products." The Domestic Industry Products are researched, developed, designed, tested, supported, and/or otherwise engineered by Infineon in the United States.

20. Each Asserted Patent has at least one claim that is practiced by the IG DI Products and/or the GS DI Products. As required by 19 U.S.C. §§ 1337(a)(2) and 1337(a)(3), a domestic industry in the United States exists relating to plant, equipment, labor, and capital associated with the research, development, and engineering of the Domestic Industry Patents. Further, Infineon has made significant investments in the exploitation of the inventions claimed in the Asserted Patents, including through research, development, and engineering.

21. The claims demonstrating the technical prong of the domestic industry requirement in this investigation (collectively, the "DI Claims") include at least the claims shown below, with the exemplary independent claims that have been charted in Confidential Exhibits 32C-38C illustrated in bold:

Patent	DI Claims
’481 Patent	**1**, 2-4, 6, 9, **17**
’562 Patent	**1**, 2, 8-11, **13**, 14-16
’755 Patent	**1**, 2-4, 8, 9
’003 Patent	**1**, 2, **10**

22. Infineon seeks as relief a permanent limited exclusion order pursuant to 19 U.S.C. § 1337(d) barring from entry into the United States infringing Accused Products, or Accused Products that are manufactured abroad, sold for importation into the United States, and/or sold in the United States after importation by or on behalf of Innoscience, against Innoscience and its subsidiaries, affiliates, agents, successors, and assigns, excluding and barring from entry into the United States all articles that infringe, literally or under the doctrine of equivalents, at least one or more claims of each of the Asserted Patents.

23. Infineon also seeks permanent cease and desist orders pursuant to 19 U.S.C. § 1337(f) prohibiting Respondents and their subsidiaries, affiliates, agents, successors, and assigns from engaging in the importation, sale for importation, and/or sale within the United States after importation of such articles, offering for sale for importation and/or offer for sale within the United States; marketing, distributing, offering for sale, selling, servicing, repairing, warehousing inventory of, and transferring the articles within the United States; advertising or demonstrating related to such imported articles; soliciting agents, retailers, resellers, or distributors in the United States for such articles; or aiding and abetting other entities in the importation, sale for importation, sale after importation, transfer, or distribution of such articles.

24. Infineon requests that the Commission require an appropriate bond for any activities otherwise covered by the limited exclusion order and/or permanent cease and desist orders during the 60-day Presidential review period pursuant to 19 U.S.C. § 1337(j).

II. THE PARTIES

A. The Complainants

25. Complainant Infineon Austria is a corporation organized under the laws of Austria having a principal place of business at Siemensstraße 2, A-9500 Villach, Austria.

26. Complainant Infineon Americas is a corporation organized under the laws of the State of Delaware, having its principal place of business at 101 North Pacific Coast Highway, El Segundo, California 90245.

B. The Respondents

27. On information and belief, Respondent Innoscience Suzhou is a Chinese corporation that has its principal place of business and headquarters at No. 98, Xinli Road, Lili Town, Wujiang District Suzhou, Jiangsu, 215000 China. On information and belief, Innoscience Suzhou is the parent company to subsidiaries Innoscience Suzhou Semiconductor, Innoscience Zhuhai, and Innoscience America.

28. On information and belief, Respondent Innoscience Suzhou Semiconductor is a Chinese corporation that has a principal place of business and headquarters at No. 98, Xinli Road, Lili Town, Wujiang District Suzhou, Jiangsu, 215000 China.

29. On information and belief, Respondent Innoscience Zhuhai is a Chinese corporation that has a principal place of business and headquarters at No. 39, Jinyuan 2nd Road, High-Tech Zone, Zhuhai, Guangdong, 519099 China.

30. On information and belief, Respondent Innoscience America, Inc. is a California corporation that has its principal place of business at 5451 Great America Parkway, Suite 125, Santa Clara, California 95054.

III. THE ASSERTED PATENTS AND NON-TECHNICAL DESCRIPTIONS

A. The ’481 Patent

1. Identification of Patent and Ownership

31. On February 20, 2018, the United States Patent and Trademark Office (“USPTO”) duly and legally issued the ’481 Patent, entitled “*Electronic Component and Switch Circuit*.” The ’481 Patent names Ralf Otremba and Klaus Schiess as inventors. The ’481 Patent issued from U.S. Application Serial No. 14/997,914, filed on January 18, 2016. The ’481 Patent expires on January 18, 2036. A true, correct, and certified copy of the ’481 Patent is attached as Exhibit 1.

32. Complainant Infineon Austria is the assignee and owner of all right, title, and interest in and to the ’481 Patent following an assignment from the named inventors. A true, correct, and certified copy of the assignment history for the ’481 Patent is attached as Exhibit 5.

33. Pursuant to Commission Rule 210.12, the Complaint is accompanied by: (1) a true, correct, and certified copy of the ’481 Patent (Exhibit 1); (2) a true, correct, and certified copy of the prosecution history of the ’481 Patent (Appendix A); (3) a copy of each reference cited therein (Appendix B); and (4) a true, correct, and certified copy of the recorded assignment from the inventors of the ’481 Patent (Exhibit 5).

34. Any description of the ’481 Patent herein is provided solely for compliance with the Commission Rules, and is not intended to limit, define, or otherwise affect the scope, construction, and/or application of the ’481 Patent’s language.

2. Non-Technical Description of the ’481 Patent

35. The ’481 Patent relates generally to semiconductor device packaging technology suitable for use with GaN devices. A package for a semiconductor device includes internal electrical connections from the semiconductor device to a substrate or a leadframe including outer

contacts. The outer contacts are used to mount the electronic component on a redistribution board, such as a printed circuit board.

36. While compound semiconductor devices such as GaN devices have emerged as attractive candidates for power applications to carry large currents, support high voltages, and to provide very low on-resistance and fast switching times, the high voltages and fast switching times of such devices result in additional challenges for package development. For example, high switching speeds of a transistor device can result in a voltage drop across a parasitic source inductance, which may result in increased energy loss.

37. The ’481 Patent generally describes a compound semiconductor transistor such as a lateral HEMT housed within a surface mountable device (SMD) package that can provide a source sense functionality by using a separate connection to the source, which can exclude the parasitic source inductance that could result in increased energy loss at high switching speeds.

3. Foreign Counterparts to the ’481 Patent

38. As required under Commission Rule 210.12(a)(9)(v), the following table lists all of the foreign counterpart patents and applications for the ’481 Patent that have been filed, issued, denied, abandoned, or withdrawn.

Jurisdiction	Patent/Application No.	Status
Germany	DE102017100947	Active
Germany	DE102017012537.6	Active
Germany	DE202017007691	Active

B. The ’562 Patent

1. Identification of Patent and Ownership

39. On April 1, 2014, the USPTO duly and legally issued the ’562 Patent, entitled “*Refractory Metal Nitride Capped Electrical Contact and Method for Frabricating [sic]*[1] *Same*.” The ’562 Patent names Sadiki Jordan as inventor. The ’562 Patent issued from U.S. Application Serial No. 12/583,809 (“the ’809 Application”), filed on August 25, 2009. The ’562 Patent expires on April 19, 2030. A true, correct, and certified copy of the ’562 Patent is attached as Exhibit 2.

40. Complainant Infineon Americas is the assignee and owner of all right, title, and interest in and to the ’562 Patent following an assignment from the named inventor. A true, correct, and certified copy of the assignment history for the ’562 Patent is attached as Exhibit 6.

41. Pursuant to Commission Rule 210.12, the Complaint is accompanied by: (1) a true, correct, and certified copy of the ’562 Patent (Exhibit 2); (2) a true, correct, and certified copy of the prosecution history of the ’562 Patent (Appendix C); (3) a copy of each reference cited therein (Appendix D); and (4) a true, correct, and certified copy of the recorded assignment from the inventor of the ’562 Patent (Exhibit 6).

42. Any description of the ’562 Patent herein is provided solely for compliance with the Commission Rules, and is not intended to limit, define, or otherwise affect the scope, construction, and/or application of the ’562 Patent’s language.

2. Non-Technical Description of the ’562 Patent

43. The ’562 Patent relates to an electrical contact for use on a semiconductor device, such as a GaN power transistor or other semiconductor power device fabricated using at least one

[1] The USPTO apparently introduced a typographical error in the patent as issued. The ’809 Application as filed was entitled “Refractory Metal Nitride Capped Electrical Contact and Method for Fabricating Same.”

group III element (such as Ga) and one group V element (such as nitrogen) ("III-V power semiconductor devices") and facilitating compatibility and integration with traditional group IV semiconductor devices such as those fabricated using silicon.

44. III-V power semiconductor device typically includes electrical contacts having a low contact resistivity. In conventional approaches, electrical contacts on III-V power semiconductors devices utilized gold to form a capping layer of an electrode stack—for example, a stack comprising pure films of titanium, aluminum, and nickel, capped with gold. However, there are disadvantages to using gold as a capping layer—including gold's high cost and propensity to contaminate a silicon fabrication process flow by diffusion through the electrode stack. Such propensity makes it difficult to integrate III-V power semiconductor devices with convention group IV semiconductor devices fabricated using silicon.

45. The '562 Patent generally describes a novel refractory metal nitride capped electrical contact that provides advantages over the conventional art, including improved cost effectiveness and easier, more efficient integration of group III-V power semiconductor devices and silicon devices.

3. Foreign Counterparts to the '562 Patent

46. Pursuant to Commission Rule 210.12(a)(9)(v), Infineon states that to the best of its present knowledge, information, and belief there are no foreign patents or foreign patent applications (whether issued, pending, abandoned, withdrawn, or rejected) corresponding to the '562 Patent.

C. The ’755 Patent

1. Identification of Patent and Ownership

47. On June 30, 2015, the USPTO duly and legally issued the ’755 Patent, entitled “*Transistor Having Elevated Drain Finger Termination*.” The ’755 Patent names Michael A. Briere and Reenu Garg as inventors. The ’755 Patent issued from U.S. Application Serial No. 13/941,335 filed on July 12, 2013. The ’755 Patent further claims priority under 35 U.S.C. § 120 to U.S. Patent Application Serial No. 13/749,477 (filed on January 24, 2013) and under 35 U.S.C. § 119 to U.S. Provisional Patent Application Serial Nos. 61/674,553 (filed on July 23, 2012) and 61/600,469 (filed on February 17, 2012). The ’755 Patent expires on January 28, 2033. A true, correct, and certified copy of the ’755 Patent is attached as Exhibit 3.

48. Complainant Infineon Americas is the assignee and owner of all right, title, and interest in and to the ’755 Patent following an assignment from the named inventors. A true, correct, and certified copy of the assignment history for the ’755 Patent is attached as Exhibit 7.

49. Pursuant to Commission Rule 210.12, the Complaint is accompanied by: (1) a true, correct, and certified copy of the ’755 Patent (Exhibit 3); (2) a true, correct, and certified copy of the prosecution history of the ’755 Patent (Appendix E); a copy of each reference cited therein (Appendix F); and (4) a true, correct, and certified copy of the recorded assignment from the inventor of the ’755 Patent (Exhibit 7).

50. Any description of the ’755 Patent herein is provided solely for compliance with the Commission Rules, and is not intended to limit, define, or otherwise affect the scope, construction, and/or application of the ’755 Patent’s language.

2. Non-Technical Description of the ’755 Patent

51. To satisfy the increasing power requirements for high voltage power transistors, such transistors must be fabricated with a higher unit cell density with smaller separations (half-

pitch) between interdigitated source and drain finger electrodes. However, due to high termination electric fields typically present at the drain finger electrode ends, the electrode spacing at the drain finger electrode ends of higher density power transistors may be insufficient to reliably sustain a high breakdown voltage. As a result, transistors may break down, become unstable, and/or fail catastrophically under high voltage operation.

52. The ’755 Patent generally describes implementations of a drain finger electrode in a power transistor adapted for high termination electric fields, for example by using a drain finger electrode that has at least a portion of drain finger electrode end that is non-coplanar with the drain finger electrode main body. As a result, an increased breakdown voltage can be achieved while concurrently maintaining a low specific on-resistance through a shorter source-to-drain half pitch.

3. Foreign Counterparts to the ’755 Patent

53. Pursuant to Commission Rule 210.12(a)(9)(v), Infineon states that to the best of its present knowledge, information, and belief there are no foreign patents or foreign patent applications (whether issued, pending, abandoned, withdrawn, or rejected) corresponding to the ’755 Patent. However, Infineon notes that related U.S. Patent No. 9,379,231 (from which the ’755 Patent descends as a continuation-in-part) has foreign counterparts EP2529332B1 and JP5722931B2.

D. The ’003 Patent

1. Identification of Patent and Ownership

54. On September 11, 2012, the USPTO duly and legally issued the ’003 Patent, entitled “*Merged Cascode Transistor*.” The ’003 Patent names Thomas Herman as inventor. The ’003 Patent issued from U.S. Application Serial No. 11/688,338 filed on March 20, 2007. The ’003 Patent further claims priority under 35 U.S.C. § 119 to U.S. Provisional Patent Application Serial

No. 60/783,934 filed on March 20, 2006. The ’003 Patent expires on March 20, 2027. A true, correct, and certified copy of the ’003 Patent is attached as Exhibit 4.

55. Complainant Infineon Americas is the assignee and owner of all right, title, and interest in and to the ’003 Patent following an assignment from the named inventor. A true, correct, and certified copy of the assignment history for the ’003 Patent is attached as Exhibit 8.

56. Pursuant to Commission Rule 210.12, the Complaint is accompanied by: (1) a true, correct, and certified copy of the ’003 Patent (Exhibit 4); (2) a true, correct, and certified copy of the prosecution history of the ’003 Patent (Appendix G); a copy of each reference cited therein (Appendix H); and (4) a true, correct, and certified copy of the recorded assignment from the inventor of the ’003 Patent (Exhibit 8).

57. Any description of the ’003 Patent herein is provided solely for compliance with the Commission Rules, and is not intended to limit, define, or otherwise affect the scope, construction, and/or application of the ’003 Patent’s language.

2. Non-Technical Description of the ’003 Patent

58. The ’003 Patent relates to a transistor with a gate (G) that is used to control current flowing between a drain (D) and a source (S). It addresses challenges that can arise when conventional transistors are used in high voltage and/or high speed switching applications. First, large peak drain voltage (V_d) swings during switching creates a large “Miller effect” that causes excessive switching losses. Second, a high transient dV_d/dt when the drain voltage changes rapidly may result in a voltage transient in a gate voltage V_g that can briefly turn on the transistor when it is intended to be off. This unwanted period of conduction, sometimes referred to as a “shoot through,” may result in large power and efficiency losses.

59. The ’003 Patent generally describes a merged cascode transistor used in a transistor circuit that can address these problems. In one embodiment, the transistor is a single device that

includes a bottom portion Q1 and a top portion Q2 in series in a cascode geometry, as illustrated in Figs. 2 and 3 (reproduced below). Q1's drain (D1) and Q2's source (S2) are merged in a node d1s2 (represented by the arrow 39 in Fig. 3) in a semiconductor element 29 and between Q1 and Q2. In the transistor circuit for this example, the input to the transistor is connected to the gate of Q1 (V_{g1}), while both the gate of Q2 (V_{g2}) and source of Q1 (V_{s1}) are connected to a common voltage of 0 volt. In this example, Q1 is an enhancement mode transistor that is normally off, Q2 is a depletion mode transistor that is normally on, such that when an input V_{g1} is provided to control Q1 to turn off, Q2 will also become off to block the high voltage at the drain V_{d2} from reaching Q1. As a result, even though V_{d2} may have a peak value of hundreds of volts, Q1's drain, which is at the node V_{d1s2}, is substantially reduced to a swing of only a few volts during switching. As a result, the transistor is more efficient and less susceptible to overall power losses.

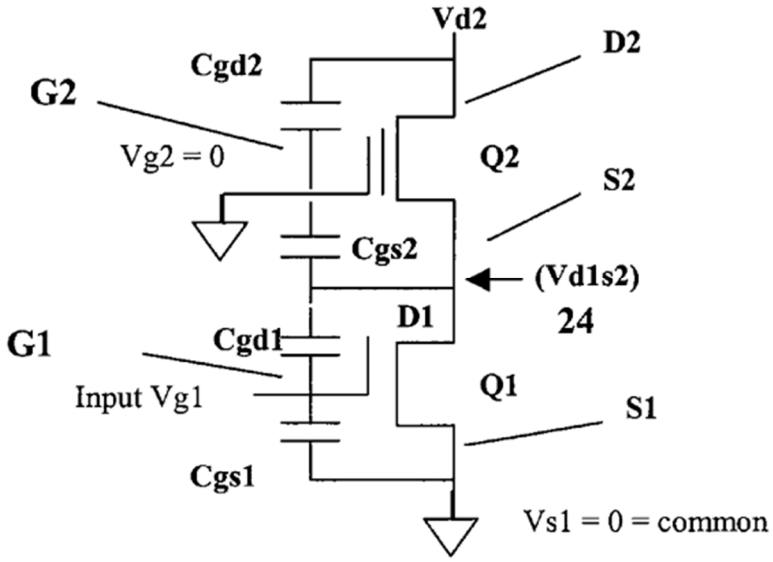

Fig. 2 of the '003 Patent.

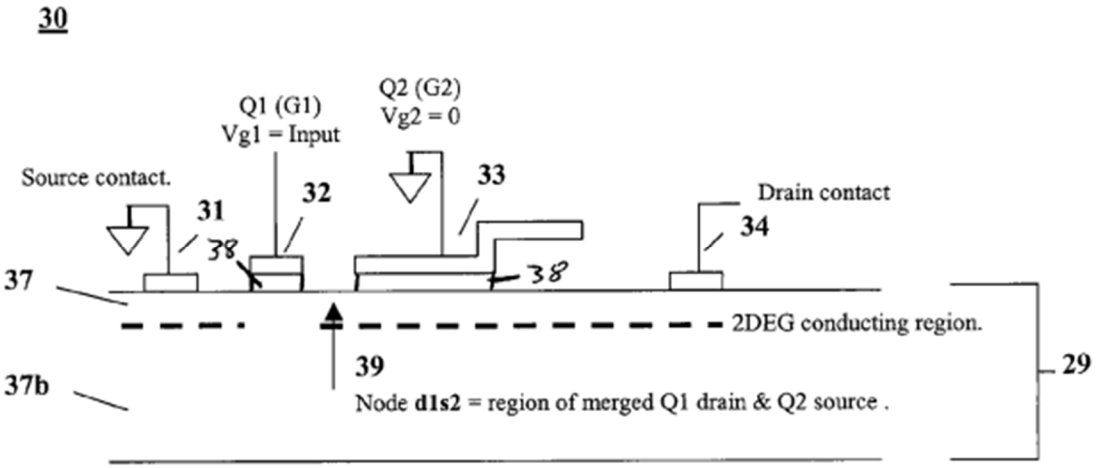

Fig. 3 of the ’003 Patent.

3. Foreign Counterparts to the ’003 Patent

60. As required under Commission Rule 210.12(a)(9)(v), the following table lists all of the foreign counterpart patents and applications for the ’003 Patent that have been filed, issued, denied, abandoned, or withdrawn.

Jurisdiction	Patent/Application No.	Status
Germany	DE112007000667.6	Inactive (withdrawn)
Japan	JP2009530862	Denied
WIPO	PCT/US07/06983	Inactive (withdrawn)

61. For avoidance of doubt, the foregoing identification of specific models or products is not intended to limit the scope of the investigation. The Commission’s investigation and any remedy should extend to all of Respondents’ infringing products.

IV. SPECIFIC INSTANCES OF IMPORTATION BY RESPONDENTS CONSTITUTING UNLAWFUL AND UNFAIR ACTS

62. Upon information and belief, Respondents are engaged in the unlawful importation into the United States, sale for importation, and/or sale within the United States after importation of certain semiconductor devices and products containing the same that infringe at least the Asserted Claims of the Asserted Patents. These activities constitute a violation of Section 337.

63. Specific examples of infringing products imported into and sold within the United States by or on behalf of Respondents are set forth below in Section V in detail. Pursuant to Commission Rule 210.12(a)(9)(viii), Infineon provides infringement claim charts for each Asserted Patent that apply each asserted independent claim to a "representative" Accused Product. Pursuant to Commission Rule 210.12(a)(9)(x), photographs of representative Accused Products are included in the Declaration of Robert V. White. *See* Exhibit 11.

64. As reflected in Mr. White's declaration, he purchased and obtained Innoscience products through RichardsonRFPD. Mr. White received packages originating from RichardsonRFPD in Hong Kong as reflected in the packages and shipping labels themselves:

EMBEDDED POWER LABS
10224 KNOLL CIR
HIGHLANDS RANCH CO 80130
P:BROWN S:YELLOW I:P4
EEE--4400
1 OF 1
SHIP TO:
ROBERT WHITE
(303) 474-0981
EMBEDDED POWER LABS
10224 KNOLL CIRCLE
HIGHLANDS RANCH CO 80130
UNITED STATES
CO 801 0-12
UPS SAVER
1P
EDI-CCP
UPS World Ease

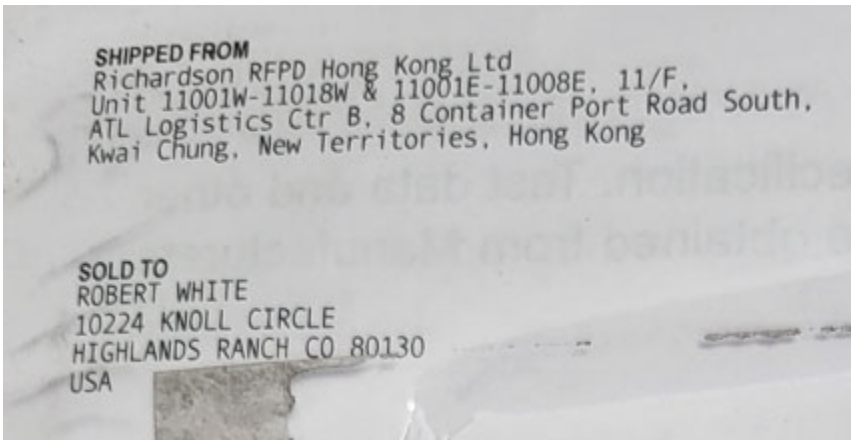
SHIPPED FROM
Richardson RFPD Hong Kong Ltd
Unit 11001W-11018W & 11001E-11008E, 11/F,
ATL Logistics Ctr B, 8 Container Port Road South,
Kwai Chung, New Territories, Hong Kong
SOLD TO
ROBERT WHITE
10224 KNOLL CIRCLE
HIGHLANDS RANCH CO 80130
USA

ORDER: 6053294A
QUANTITY: 10x20
ORDER: 6053294A
QUANTITY: 4x1
SENDER
Richardson RFPD Inc
DESTINATION
ROBERT WHITE
10224 KNOLL CIRCLE
HIGHLANDS RANCH CO 80130
GROSS WEIGHT
CTN 1 OF 1
UPS WORLDEASE
23 x 22 x 17
6053294AA202405070001
EXPECTED SHIP DATE 08-MAY-24
INVOICE NUMBER:
DELIVERY NUMBER:
CUSTOMER PO #:
MANUFACTURER PART:
CUSTOMER PART:
LABEL #:
1 / 5
1006053294AA
6053294AA

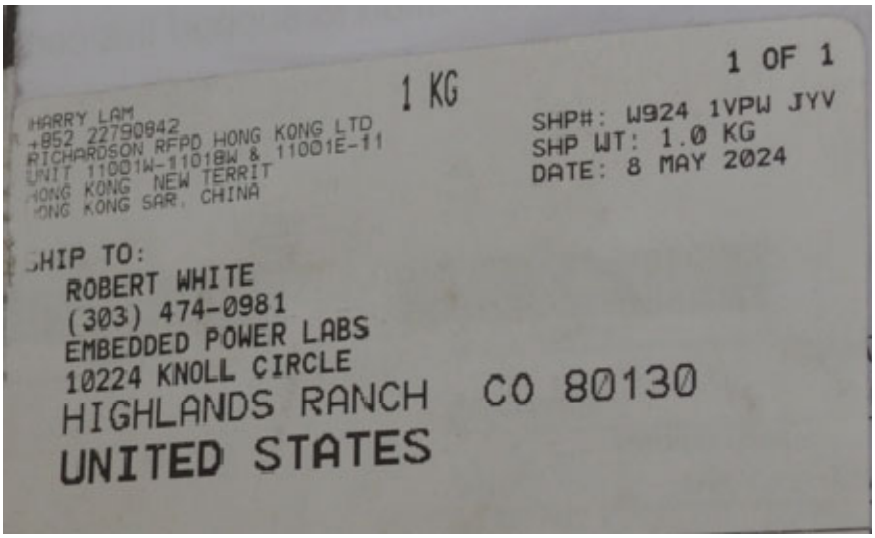
1 OF 1
1 KG
HARRY LAM
+852 22790842
RICHARDSON RFPD HONG KONG LTD
UNIT 11001W-1101BW & 11001E-11
HONG KONG NEW TERRIT
HONG KONG SAR, CHINA
SHP#: W924 1VPW JYV
SHP WT: 1.0 KG
DATE: 8 MAY 2024
SHIP TO:
ROBERT WHITE
(303) 474-0981
EMBEDDED POWER LABS
10224 KNOLL CIRCLE
HIGHLANDS RANCH CO 80130
UNITED STATES

HARRY LAM
+852 22790842
RICHARDSON RFPD HONG KONG LTD
UNIT 11001W-11018W & 11001E-11
HONG KONG NEW TERRIT
HONG KONG SAR, CHINA
1 KG
1 OF 1
SHP#: W924 1V03 HFH
SHP WT: 0.5 KG
DATE: 26 JUN 2024
SHIP TO:
ROBERT WHITE
(303) 474-0981
EMBEDDED POWER LABS
10224 KNOLL CIRCLE
HIGHLANDS RANCH CO 80130
UNITED STATES
CO 801 0-12
UPS SAVER
TRACKING #: 1Z W92 41V 04 7775 5706
1P
BILLING: P/P
DESC: ELEC COMPONENT
KEY
Invoice No.: 6058933aa
DESCRIPTION:
GAN POWER TRANSISTOR

HARRY LAM
+852 22790842
RICHARDSON RFPD HONG KONG LTD
UNIT 11001W-11018W & 11001E-11
HONG KONG NEW TERRIT
HONG KONG SAR, CHINA

1 KG

1 OF 1
SHP#: W924 1VQ3 HFH
SHP WT: 0.5 KG
DATE: 26 JUN 2024

SHIP TO:
ROBERT WHITE
(303) 474-0981
EMBEDDED POWER LABS
10224 KNOLL CIRCLE
HIGHLANDS RANCH CO 80130
UNITED STATES

65. As reflected in a 2022 press release, Innoscience has "a global distribution agreement with Richardson RFPD." Exhibit 56.

66. Innoscience's website identifies Innoscience's "Authorized Distributors," which include "Richardson RFPD." Exhibit 57.

67. Richardson RFPD's website identifies Innoscience as a supplier of the Innoscience products. Exhibit 58.

68. Richardson RFPD's website identifies and lists numerous Accused Products for sale online in the United States. Exhibit 59.

69. The Declaration of Robert V. White, attached as Exhibit 11, provides additional detail regarding specific instances of importation of such products—including the INN650D080BS, INN650DA190A, INN100W032A, and ISG3201.

70. The accused Innoscience INN650D080BS has been imported into the United States, sold outside the United States for importation into the United States, and/or sold after importation in the United States by Respondents. *See* Exhibit 11 (Declaration of Robert V. White regarding importation). As detailed in *infra* Sections V.A-B and accompanying Exhibits 13 and

15, the accused Innoscience INN650D080BS is covered by at least by the ’481 Patent (including at least claims 1 and 17) and the’562 Patent (including at least claims 1 and 13).

71. The accused Innoscience INN650DA190A has been imported into the United States, sold outside the United States for importation into the United States, and/or sold after importation in the United States by Respondents. *See* Exhibit 11 (Declaration of Robert V. White regarding importation). As detailed in *infra* Section V.A and accompanying Exhibit 14, the accused Innoscience INN650DA190A is covered by at least claims 1 and 17 of the ’481 Patent.

72. The accused Innoscience INN100W032A has been imported into the United States, sold outside the United States for importation into the United States, and/or sold after importation in the United States by Respondents. *See* Exhibit 11 (Declaration of Robert V. White regarding importation); *see also* Exhibit 48, 50-53 (Inv. No. 337-TA-1366, Complaint (May 24, 2023) ¶¶ 14, 59 and Exhibits 32-35). As detailed in *infra* Section V.C and accompanying Exhibit 16, the accused Innoscience INN100W032A is covered by at least claim 1 of the ’755 Patent.

73. The accused ISG3201 has been imported into the United States, sold outside the United States for importation into the United States, and/or sold after importation in the United States by Respondents. *See* Exhibit 11 (Declaration of Robert V. White regarding importation). As detailed in *infra* Section V.D and accompanying Exhibit 17, the accused Innoscience ISG3201 is covered by at least claims 1 and 10 of the ’003 Patent.

74. Additional Accused Products have also been imported into the United States, sold outside the United States for importation into the United States, and/or sold after importation in the United States by Respondents. Non-limiting examples of such Accused Products include the following part numbers between March and May of 2024: INN650D190A, INN040W048A, INNDDD150A1, INNEHB100B1, INNEHB040A1, INNEHB150B1, INN150LA070A,

INN100W14, INN040LA015A, INN650D140A, INN650DA240A, INN650DA500A, INN650DA350A, INN650DA600A, INN650DA140A, and INN650D240A. *See* Exhibit 11, ¶¶10, 18 (Declaration of Robert V. White concerning importation and discussing receipt of Accused Products from Innoscience via Richardson RFPD).

75. Recently, Innoscience's GaN transistor products were the target of ITC Investigation No. 337-TA-1366. *See* Exhibit 48 (*Certain Semiconductor Devices, and Methods of Manufacturing Same and Products Containing the Same*, Inv. No. 337-TA-1366, Complaint (May 24, 2023)). In that Complaint, Complainant Efficient Power Corporation demonstrated importation of representative accused product with a declaration submitted by one of their Expert Witnesses, Dr. Fred Schubert. *See id.*, Exhibit No 25 (Schubert Declaration). Dr. Schubert's Declaration is attached as Exhibit 49.

76. Specifically, Dr. Schubert ordered a variety of GaN products directly from Innoscience America, Inc., including the Innoscience INN650D080BS and INN100W032A—which are Accused Products identified herein and the subject of claim charts provided pursuant to Commission Rule 210.12(a)(9)(viii). Schubert Declaration at ¶5, 10. As the Complaint in the 1366 Investigation and Dr. Schubert's accompanying Declaration describe, Dr. Schubert interacted with an Innoscience America representative who helped arrange shipment of the products from Shenzhen City, China from Innoscience Zhuhai to his residence in Troy, New York. *Id.*

77. As noted by Commission Staff in their pre-hearing brief, Innoscience did not contest importation as to any of the products accused of infringement in the 1366 Investigation. *See* Exhibit 54 (*Certain Semiconductor Devices, and Methods of Manufacturing Same and Products Containing the Same*, Inv. No. 337-TA-1366, Staff's Pre-Hearing Brief, 15 (February 9,

2024) ("Moreover, Innoscience does not contest that the importation requirement of Section 337 is satisfied.")).

78. In addition, in the evidentiary hearing in the 1366 Investigation, the Founder and Chair of Innoscience, Dr. Wei Wei Luo, confirmed that Innoscience manufactures its products entirely in two fabrication plants in Zhuhai and Suzhou, China prior to importation into the United States. Exhibit 24 (ITC Inv. No. 337-TA-1366, Evidentiary Hearing transcript, Opening Statement of Respondent Innoscience, 24:12-13) ("Innoscience makes all of its own chips."); Exhibit 55 (ITC Inv. No. 337-TA-1366, Evidentiary Hearing transcript, Dr. Wei Wei Luo, Innoscience Founder, Chairwoman, 721:22-722:8 (Innoscience has two fabrication facilities); *see* Exhibit 63.

79. Dr. Luo also explained that Innoscience America manages sales of the Accused Products in the United States. Exhibit 55 (ITC Inv. No. 337-TA-1366, Evidentiary Hearing transcript, Dr. Wei Wei Luo, Innoscience Founder, Chairwoman, 729:12-729:20) ("[Innoscience America is] also a child company of Innoscience Suzhou … [i]t's the sales offices of Innoscience Suzhou.").

80. In addition, Innoscience has plainly advertised its United States presence and marketed and sold its products within the United States.

81. For instance, Innoscience attended the IEEE Applied Power Electronics Conference ("APEC 2023") from March 19-23, which was held in Orlando, Florida. APEC is an annual North American trade show and has been held in the United States for the last ten years. Innoscience maintained a booth at APEC 2023 which included virtual display boards, flyers, and physical samples of Innoscience products, which "showcased [Innoscience's] silicon-based GaN wafers and GaN chips ranging from 30V to 700V for high, medium and low voltage applications." *See* Exhibit 60.

Photograph from Exhibit 60 Demonstrating Innoscience APEC 2023 Booth

82. Innoscience also attended APEC 2024, that was held from February 25-29, 2024 ("APEC 2024") in Long Beach, CA, where Innoscience had a similar corporate booth. *See* Exhibit 62 at 119. Innoscience's booth at APEC 2024 included at least: a virtual display board, handout flyers, a poster board with attached physical products, and a display case that displayed physical samples of several Innoscience products. A web article advertising Innoscience's attendance and presentations given at APEC 2024 is attached as Exhibit 61. A copy of the APEC 2024 event program, with exhibitor listings, is attached as Exhibit 62.

83. As discussed in Section I, Innoscience has explicitly touted its products' "pin-to-pin compatibility" with Infineon products in an attempt to lure Infineon customers from Infineon to Innoscience. *See supra* Section I.

84. Infineon expects further discovery to reveal other specific acts of Respondents' importation, sale for importation, and/or sale after importation of Accused Products that infringe the Asserted Patents, including, but not limited to, additional models of the Accused Products.

V. RESPONDENT'S INFRINGEMENT OF THE ASSERTED PATENTS

85. As noted above and set forth in further detail herein, the Accused Products infringe at least the following claims of the Asserted Patents:

Patent	Asserted Claims
'481 Patent	**1**, 2-4, 6, 9, **17**
'562 Patent	**1**, 2, 8-10, **13**, 14, 15
'755 Patent	**1**, 2-4, 8, 9
'003 Patent	**1**, 2, **10**

86. More specifically, Respondents directly infringe the Asserted Claims in violation of 35 U.S.C. § 271, literally or under the doctrine of equivalents; induce the infringement of these claims in violation of 35 U.S.C. § 271(b); and/or contributorily infringe these claims in violation of 35 U.S.C. § 271(c). Respondents infringe these claims by importing, selling for importation, and/or selling after importation into the United States the Accused Products in violation of 35 U.S.C. § 271. Discovery may reveal that Respondents infringe additional claims of the Asserted Patents, in which case the Complainant may seek leave to amend this Complaint to assert such claims.

87. On information and belief, Respondents manufacture, assemble, package, test, and/or purchase the Accused Products outside the United States, specifically within China. On information and belief, Respondents then import, sell for importation, and/or sell within the United

States after importation the Accused Products. In particular, on information and belief, the representative Accused Products discussed in supra Section V and further detailed below are representative of other Innoscience products imported into the United States, sold for importation into the United States, and/or sold within the United States after importation by the Respondents given that such other devices incorporate the same or substantially similar infringing designs, features, and/or functionalities.

A. The ’481 Patent

88. As demonstrated herein, Respondents import, sell for importation, and/or sell after importation into the United States, Accused Products satisfying all limitations of at least the Asserted Claims of the ’481 Patent, whether literally or under the doctrine of equivalents. Accordingly, Respondents have directly infringed and continue to directly infringe the Asserted Claims of the ’481 Patent under 35 U.S.C. § 271(a).

89. Pursuant to Commission Rule 210.12(a)(9)(viii), claim charts comparing independent claims 1 and 17 of the ’481 Patent to representative Accused Products (including INN650D080BS and INN650DA190A) are attached as Exhibits 13 and 14. Both INN650D080BS and INN650DA190A are among the representative Accused Products that Infineon’s consultant obtained after they were imported into the United States, sold outside the United States for importation into the United States, and/or sold after importation in the United States by Respondents. *See supra* Section IV,

90. On information and belief, other Accused Products are similar in relevant respect to INN650D080BS and INN650DA190A (including a lateral transistor device and having source sensing functionality) and infringe the Asserted Claims of the ’481 Patent for the same reasons reflected in Exhibits 13 and 14.

91. In addition, Respondents have indirectly infringed and continue to indirectly infringe the Asserted Claims of the ’481 Patent by inducing infringement. Specifically, Respondents have actively, knowingly, and intentionally induced, and continue to actively, knowingly, and intentionally induce direct infringement of the Asserted Claims of the ’481 Patent by customers, distributors, and/or end users by among other things, selling for importation, importing into the United States, and/or selling within the United States after importation the Accused Products, as well as by contracting with others to offer to sell, sell for importation, sell within the United States after importation, and/or import into the United States the Accused Products.

92. Respondents engage in these unlawful acts with knowledge of the ’481 Patent, at least as of March 13, 2024, the date the complaint was filed in *Infineon Technologies Austria AG v. Innoscience (Suzhou) Technology Company, Ltd., et al.* (N.D. Cal. Case No. 3:24-cv-01553, the “N.D. Cal. District Court Case”), with knowledge and/or willful blindness that their actions will induce infringement by Respondents’ customers, distributors, and/or end users; and with the knowledge and intent to encourage and facilitate infringing sales and uses of the Accused Products through, *inter alia*, the creation and dissemination of promotional and marketing materials, instructional materials, product manuals, and technical materials related to the Accused Products (*see, e.g.*, Exs. 10, 60-61, and 64-66), and offering support and technical assistance to its customers.

93. In addition, on July 23, 2024, Respondents were served with an amended complaint in the District Court case including claim charts substantially identical to Exhibits 13 and 14 herein and thus providing further detail concerning why the Accused Products—including

INN650D080BS and INN650DA190A—directly infringes claims 1 and 17 of the ’481 Patent.[2] Respondents also have knowledge and notice of the ‘481 Patent at least as of the date of this Complaint, which has also put Respondents on notice of why the Accused Products (including Innoscience’s INN650D080BS and INN650DA190A) directly infringe claims 1 and 17 of the ’481 Patent.

B. The ’562 Patent

94. As demonstrated herein, Respondents import, sell for importation, and/or sell after importation into the United States, Accused Products satisfying all limitations of at least the Asserted Claims of the ’562 Patent, whether literally or under the doctrine of equivalents. Accordingly, Respondents have directly infringed and continue to directly infringe the Asserted Claims of the ’562 Patent under 35 U.S.C. § 271(a).

95. Pursuant to Commission Rule 210.12(a)(9)(viii), a claim chart comparing independent claims 1 and 13 of the ’562 Patent to a representative Accused Product (INN650D080BS) is attached as Exhibit 15. The INN650D080BS is among the representative Accused Products that Infineon’s consultant obtained after they were imported into the United States, sold outside the United States for importation into the United States, and/or sold after importation in the United States by Respondents. *See supra* Section IV.

96. On information and belief, other Accused Products are similar in relevant respect to INN650D080BS (including a electrode stack including a titanium nitride (TiN) capping layer) and infringe the Asserted Claims of the ’562 Patent for the same reasons reflected in Exhibit 15.

[2] Innoscience (Suzhou) Semiconductor Co., Ltd. is not a defendant in the District Court case but is a wholly owned subsidiary of Innoscience Suzhou, which is a defendant in the District Court case and was served with the amended complaint.

97. In addition, Respondents have indirectly infringed and continue to indirectly infringe the Asserted Claims of the ’562 Patent by inducing infringement. Specifically, Respondents have actively, knowingly, and intentionally induced, and continue to actively, knowingly, and intentionally induce direct infringement of the Asserted Claims of the ’562 Patent by customers, distributors, and/or end users by among other things, selling for importation, importing into the United States, and/or selling within the United States after importation the Accused Products, as well as by contracting with others to offer to sell, sell for importation, sell within the United States after importation, and/or import into the United States the Accused Products.

98. Respondents engage in these unlawful acts with knowledge of the ’562 Patent, at least as of July 23, 2024, the date the amended complaint was filed and served in the N.D. Cal. District Court Case, with knowledge and/or willful blindness that their actions will induce infringement by Respondents’ customers, distributors, and/or end users; and with the knowledge and intent to encourage and facilitate infringing sales and uses of the Accused Products through, *inter alia*, the creation and dissemination of promotional and marketing materials, instructional materials, product manuals, and technical materials related to the Accused Products (*see, e.g.*, Exs. 10, 60-61, and 64-66), and offering support and technical assistance to its customers.

99. The amended complaint served on July 23, 2024, included Exhibit 9, which is substantively identical to Exhibit 15 herein and which accordingly provided detailed notice concerning the particular reasons why Innoscience’s INN650D080BS directly infringes claims 1 and 13 of the ’562 Patent. Respondents also have knowledge and notice of the ‘562 Patent at least as of the date of this Complaint, which has also put Respondents on notice of why the Accused

Products (including Innoscience's INN650D080BS) directly infringe claims 1 and 13 of the '562 Patent.

C. The '755 Patent

100. As demonstrated herein, Respondents import, sell for importation, and/or sell after importation into the United States, Accused Products satisfying all limitations of at least the Asserted Claims of the '755 Patent, whether literally or under the doctrine of equivalents. Accordingly, Respondents have directly infringed and continue to directly infringe the Asserted Claims of the '755 Patent under 35 U.S.C. § 271(a).

101. Pursuant to Commission Rule 210.12(a)(9)(viii), a claim chart comparing independent claim 1 of the '755 Patent to a representative Accused Product (INN100W032A) is attached as Exhibit 16. The INN100W032A was among the Innoscience representative Accused Products that Infineon's consultant obtained after they were imported into the United States, sold outside the United States for importation into the United States, and/or sold after importation in the United States by Respondents. *See supra* Section IV.

102. On information and belief, other Accused Products are similar in relevant respect to INN100W032A (including a drain finger electrode having a drain finger electrode end that has a portion non-coplanar with a drain finger electrode main body) and infringe the Asserted Claims of the '755 Patent for the same reasons reflected in Exhibit 16.

103. In addition, Respondents have indirectly infringed and continue to indirectly infringe the Asserted Claims of the '755 Patent by inducing infringement. Specifically, Respondents have actively, knowingly, and intentionally induced, and continue to actively, knowingly, and intentionally induce direct infringement of the Asserted Claims of the '755 Patent by customers, distributors, and/or end users by among other things, selling for importation, importing into the United States, and/or selling within the United States after importation the

Accused Products, as well as by contracting with others to offer to sell, sell for importation, sell within the United States after importation, and/or import into the United States the Accused Products.

104. Respondents engage in these unlawful acts with knowledge of the ’755 Patent, at least as of July 23, 2024, the date the amended complaint was filed in the N.D. Cal. District Court Case, with knowledge and/or willful blindness that their actions will induce infringement by Respondents’ customers, distributors, and/or end users; and with the knowledge and intent to encourage and facilitate infringing sales and uses of the Accused Products through, *inter alia*, the creation and dissemination of promotional and marketing materials, instructional materials, product manuals, and technical materials related to the Accused Products (*see, e.g.*, Exs. 10, 60-61, and 64-66), and offering support and technical assistance to its customers.

105. The amended complaint served on July 23, 2024 included Exhibit 10, which is substantially identical to Exhibit 16 herein and which accordingly provided detailed notice concerning the particular reasons why Innoscience’s INN100W032A directly infringes claim 1 of the ’755 Patent. Respondents also have knowledge and notice of the ‘755 Patent at least as of the date of this Complaint, which has also put Respondents on notice of why the Accused Products (including Innoscience’s INN100W032A) directly infringe claim 1 of the ’755 Patent.

D. The ’003 Patent

106. As demonstrated herein, Respondents import, sell for importation, and/or sell after importation into the United States, Accused Products satisfying all limitations of at least the Asserted Claims of the ’003 Patent, whether literally or under the doctrine of equivalents. Accordingly, Respondents have directly infringed and continue to directly infringe the Asserted Claims of the ’003 Patent under 35 U.S.C. § 271(a).

107. Pursuant to Commission Rule 210.12(a)(9)(viii), a claim chart comparing independent claims 1 and 10 of the ’003 Patent to a representative Accused Product (ISG3201) is attached as Exhibit 17. The ISG3201 is among the Innoscience representative Accused Products that Infineon’s consultant obtained after they were imported into the United States, sold outside the United States for importation into the United States, and/or sold after importation in the United States by Respondents. *See supra* Section IV.

108. On information and belief, other Accused Products are similar in relevant respect to ISG3201 (including a transistor circuit having a transistor in a merged cascode geometry and with a source-connected second gate that includes a field plate) and infringe the Asserted Claims of the ’003 Patent for the same reasons reflected in Exhibit 17.

109. In addition, Respondents have indirectly infringed and continue to indirectly infringe the Asserted Claims of the ’003 Patent by inducing infringement. Specifically, Respondents have actively, knowingly, and intentionally induced, and continue to actively, knowingly, and intentionally induce direct infringement of the Asserted Claims of the ’003 Patent by customers, distributors, and/or end users by among other things, selling for importation, importing into the United States, and/or selling within the United States after importation the Accused Products, as well as by contracting with others to offer to sell, sell for importation, sell within the United States after importation, and/or import into the United States the Accused Products.

110. Respondents engage in these unlawful acts with knowledge of the ’003 Patent, at least as of July 23, 2024, the date the amended complaint was filed in the N.D. Cal. District Court Case, with knowledge and/or willful blindness that their actions will induce infringement by Respondents’ customers, distributors, and/or end users; and with the knowledge and intent to

encourage and facilitate infringing sales and uses of the Accused Products through, *inter alia*, the creation and dissemination of promotional and marketing materials, instructional materials, product manuals, and technical materials related to the Accused Products (*see, e.g.*, Exs. 10, 60-61, and 64-66), and offering support and technical assistance to its customers.

111. The amended complaint served on July 23, 2024 included Exhibit 11, which is substantially identical to Exhibit 17 herein and which accordingly provided detailed notice concerning the particular reasons why Innoscience's ISG3201 directly infringes claims 1 and 10 of the '003 Patent. Respondents also have knowledge and notice of the '003 Patent at least as of the date of this Complaint, which has also put Respondents on notice of why the Accused Products (including Innoscience's ISG3201) directly infringe claims 1 and 10 of the '003 Patent.

VI. CLASSIFICATION OF THE INFRINGING PRODUCTS UNDER THE HARMONIZED TARIFF SCHEDULE

112. On information and belief, the Accused Products may be classified under at least the following heading and subheading of the Harmonized Tariff Schedule ("HTS") of the United States: 8541.21.00 (Transistors, other than photosensitive transistors); 8541.50.00 (Other semiconductor devices); 8542.31.00 (Processors and controllers, whether or not combined with memories, converters, logic circuits, amplifiers, clock and timing circuits, or other circuits); 8541.29.0095 (Transistors Other Than Photosensitive, Dissipation Rate 1W And Greater, Operating Frequency Less Than 30 Mhz); and related subheadings of the HTS.

113. This classification is exemplary in nature and not intended to restrict the scope of this Investigation or any exclusion order or other remedy ordered by the Commission.

VII. DOMESTIC INDUSTRY RELATING TO THE DOMESTIC INDUSTRY PRODUCTS AND ASSERTED PATENTS

114. An industry as required by 19 U.S.C. 1337(a)(2) and defined in U.S.C. § 1337(a)(3) exists or is in the process of being established in the United States relating to the Asserted Patents and articles protected by the Asserted Patents.

A. Infineon's Domestic Industry Products Practice the Asserted Patents (Technical Prong)

115. The Asserted Patents are critical to Infineon's success in the market for power transistors, and Infineon's patented technology is therefore widely incorporated into Infineon's GaN products, including Infineon's IG and GS GaN transistor products.

116. For example, at least the following Infineon IG Transistor Products (the "IG DI Products") practice one or more claims of the Asserted Patents:

IG DI Products
IGLD60R070D1
IGLD60R190D1
IGLD60R190D1S
IGLR60R190D1
IGLR60R260D1
IGLR60R340D1
IGT60R042D1
IGT60R070D1
IGT60R190D1

117. Further, at least the following Infineon GS Transistor Products (the "GS DI Products") practice one or more claims of the Asserted Patents.

GS DI Products
GS-065-004-1-L
GS-065-008-1-L
GS-065-011-1-L
GS-065-011-2-L
GS-065-018-2-L
GS-065-030-2-L

118. Collectively, the IG and GS DI Products represent the "Domestic Industry Products."

119. Exemplary claim charts demonstrating how a representative Domestic Industry Product practices at least one exemplary claim of each of the Asserted Patents are attached as Confidential Exhibits 32C-38C. The claims of the Asserted Patents being practiced by the Domestic Industry Products includes, but are not limited to the claims summarized in the following table:

U.S. Patent No.	Domestic Industry Claims	Practicing DI Products
'481 Patent	**1**, 2-4, 6, 9, **17**	IG DI Products GS DI Products
'562 Patent	**1**, 2, 8-11, **13**, 14-16	GS DI Products
'755 Patent	**1**, 2-4, 8, 9	IG DI Products GS DI Products

’003 Patent	**1**, 2, **10**	IG DI Products GS DI Products

B. Infineon’s Investments in the United States Relating to the Domestic Industry Products (Economic Prong)

120. With respect to each of the Asserted Patents, a domestic industry in the United States exists as defined by 19 U.S.C. §§ 1337(a)(2) and (a)(3)(A)-(C), comprising significant investments in physical operations, employment of labor and capital, and substantial exploitation of each of the Asserted Patents through engineering and research and development. A domestic industry exists based at least on Infineon Americas’ domestic activities, as well as activities conducted by GaN Systems prior to the acquisition.

121. Pursuant to Section 337(a)(2) and (a)(3)(A)-(C), a domestic industry exists with respect to articles protected by each of the Asserted Patents by virtue of Infineon Americas’ significant investments in plant and equipment, significant employment of labor or capital, and substantial investments in exploitation of each of the Asserted Patents through engineering and research and development.

122. Infineon has multiple facilities in the United States, including locations in El Segundo, California, Chandler, Arizona., and Richardson, Texas These facilities contain expensive laboratory equipment used for the research, development, design, testing, support, and/or other engineering work conducted by Infineon employees and relating to the Domestic Industry Products, as well as next generation products that incorporate the same or similar technologies. *See* Exhibit 47C (Confidential Declaration of Chris Zegarelli). Additional details regarding Infineon’s research, development, design, testing, support, and/or other engineering work conducted at these facilities are provided in the Confidential Declaration of Chris Zegarelli,

attached as Confidential Exhibit 47C. Infineon has made and continues to make substantial investments in these facilities, including at least in the form of rent, utilities, and other operating expenses. Details regarding these investments are provided in the Confidential Declaration of Chris Zegarelli, attached as Confidential Exhibit 47C.

123. Infineon has made and continues to make significant investments in United States labor and capital with respect to the articles protected by each of the Asserted Patents. As of the date of this Complaint, Infineon employs over 35 employees in the United States who work on research, development, design, testing, support, and/or other engineering activities related to the IG and GS products, as well as next generation products that incorporate the same or similar technologies. Additional details regarding Infineon's investments in labor and capital are provided in the Declaration of Chris Zegarelli, attached as Confidential Exhibit 47C.

VIII. LICENSEES

124. As required under Commission Rule 210.12(a)(9)(iii), a list of the known entities that may have rights in one or more of the Asserted Patents is attached to the Complaint as Confidential Exhibit 67C.

IX. RELATED LITIGATION

125. Infineon filed a complaint against Innoscience Suzhou, Innoscience Zhuhai, and Innoscience America in the Northern District of California on March 13, 2024. In the complaint in *Infineon Technologies Austria AG v. Innoscience (Suzhou) Technology Company, Ltd., et al.*, Case No. 3:24-cv-01553 (N.D. Cal.) (previously identified herein as the "N.D. California District Court Case"), Infineon asserted the '481 Patent against Innoscience Suzhou, Innoscience Zhuhai, and Innoscience America. On July 23, 2024, Infineon filed an amended complaint in the N.D. California District Court Case, asserting all of the Asserted Patents in this complaint.

126. Innoscience America, Inc. filed a request for inter partes review of the ’481 Patent on June 14, 2024 (IPR2024-00975).

127. Infineon has not asserted the Asserted Patents in any other litigation or administrative proceeding or participated in any litigation or administrative proceedings involving the same subject matter. Infineon nevertheless identifies the following litigation, which relates to a foreign counterpart of one of the Asserted Patents.

128. Infineon Austria filed a complaint against Innoscience Suzhou, Innoscience Suzhou Semiconductor, Innoscience Zhuhai, and Innoscience Europe N.V. in the District Court of Munich, Germany on June 4, 2024. In the complaint in Landgericht München I [District Court of Munich], June 4, 2024, 21 O 6442/24 (Ger.), Infineon asserted German patents DE 10 2017 103 054, DE 10 2017 100 947 (foreign counterpart to the ’481 Patent), and DE 10 2014 113 465.

X. REQUESTED RELIEF

129. WHEREFORE, by reason of the foregoing, Infineon respectfully requests that U.S. International Trade Commission:

130. Institute an investigation pursuant to Section 337 of the Tariff Act of 1930, as amended, 19 U.S.C. § 1337, with respect to violations based upon the unlawful importation into the United States, the sale for importation into the United States, and/or the sale within the United States after importation of certain semiconductor devices and products containing the same that infringe one or more Asserted Claims of the Asserted Patents;

131. Schedule a hearing on said unlawful acts for the purpose of (i) receiving evidence and hearing argument concerning whether there has been a violation of Section 337, and (ii) determining that there has been a violation of Section 337;

132. Issue a permanent limited exclusion order pursuant to Section 337(d) directed to products that are manufactured, imported, sold for importation, or sold after importation by or on

behalf of Respondents and their subsidiaries, related companies, and agents, excluding from entry into the United States certain semiconductor devices and products containing the same that infringe, induce infringement of and/or contribute to infringement of one or more Asserted Claims of the Asserted Patents;

133. Issue a permanent cease and desist order or orders pursuant to Section 337(f) prohibiting Respondents, and their subsidiaries, related companies, distributors, and agents from engaging in unfair acts including, but not limited to, the importation, selling for importation, marketing, advertising, testing, evaluating, demonstrating, warehousing inventory for distribution, offering for sale, selling, selling after importation, distributing, using, licensing, displaying, providing technical support for and/or otherwise transferring within the United States certain semiconductor devices and products containing the same that infringe, induce infringement of and/or contribute to infringement of one or more claims of the Asserted Patents, and engaging in any other commercial activity related to such products in the United States;

134. Impose a bond on importation and sales of infringing products during the 60-day Presidential review period pursuant to 19 U.S.C. § 1337(j); and

135. Grant such other and further relief as the Commission deems just and proper under the law, based on the facts determined by the investigation and the authority of the Commission.

Date: July 26, 2024

/s/ Gregory F. Corbett

Gregory F. Corbett
Charles T. Steenburg
Bryan S. Conley
Jie Xiang
Samuel L. Doskocil
WOLF, GREENFIELD & SACKS, P.C.
600 Atlantic Avenue
Boston, MA 02210
Telephone: 617.646.8000
Fax: 617.646.8646

Elizabeth A. DiMarco
John W. McGrath
Suresh S. Rav
WOLF, GREENFIELD & SACKS, P.C.
601 Massachusetts Avenue, NW
Washington, DC 20001
Telephone: 202.571.5001

Counsel for Complainants Infineon Technologies Austria AG and Infineon Technologies Americas Corp.

UNITED STATES INTERNATIONAL TRADE COMMISSION
WASHINGTON, D.C.

In the Matter of **CERTAIN SEMICONDUCTOR DEVICES AND PRODUCTS CONTAINING THE SAME**	**Investigation No. 337-TA-_____**

VERIFICATION TO COMPLAINT

I, Lawrence Michlovich, declare in accordance with 19 C.F.R. §§ 210.4 and 210.12(a) as follows:

1. I am the General Counsel of Infineon Technologies Americas Corp. and am duly authorized to sign this Complaint;

2. I have read the Complaint and I am aware of its contents;

3. The Complaint is not being presented for any improper purpose, such as to harass or to cause unnecessary delay or needless increase in the cost of litigation;

4. To the best of my knowledge, information, and belief founded upon reasonable inquiry, the claims and legal contentions of the Complaint are warranted by existing law or a non-frivolous argument for the extension, modification, or reversal of existing law or the establishment of new law; and

5. The allegations and other factual contentions made in the Complaint have evidentiary support or are likely to have evidentiary support after a reasonable opportunity for further investigation or discovery.

I declare under the penalty of perjury under the laws of the United States of America that the foregoing is true and correct.

Executed on July 25, 2024 in El Segundo, California.

Lawrence Michlovich