Filed: February 23, 2023

Filed on behalf of: Zhuhai CosMX Battery Co., Ltd.

UNITED STATES PATENT AND TRADEMARK OFFICE

---

BEFORE THE PATENT TRIAL AND APPEAL BOARD

---

ZHUHAI COSMX BATTERY CO., LTD.,
Petitioner

v.

NINGDE AMPEREX TECHNOLOGY LTD.,

Patent Owner

---

Case No. IPR2023-00586
Patent No. 10,833,363

---

**PETITION FOR *INTER PARTES* REVIEW**

## TABLE OF CONTENTS

I. INTRODUCTION ..... 1

II. TECHNOLOGY BACKGROUND ..... 2

A. The Core Technology in Lithium-Ion Batteries Is Decades Old ..... 2

B. The Claimed Electrolytes Were Known to Improve the Stability of the SEI Layer ..... 6

III. IDENTIFICATION OF CHALLENGES AND PRIOR ART REFERENCES RELIED UPON ..... 7

A. Hong ..... 7

B. Zhuang ..... 8

C. Kim ’685 ..... 9

D. Kim ’934 ..... 9

E. Fujikawa ..... 10

IV. THE ALLEGED INVENTION OF THE ’363 PATENT ..... 10

A. Specification ..... 11

B. Summary of Relevant Prosecution History of the ’363 Patent ..... 11

V. LEVEL OF ORDINARY SKILL IN THE ART ..... 12

VI. CLAIM CONSTRUCTION ..... 12

VII. CLAIMS 1-16 OF THE ’363 PATENT ARE UNPATENTABLE ..... 14

A. Ground 1: Claims 1-6, 11, 13, and 16 Are Anticipated by Hong ..... 14

1. Claim 1 ..... 14

a. [1pre]: “An electrolyte, comprising” ..... 15

b. [1.a]: “a dinitrile compound” ..... 15

c. [1.b]: “a trinitrile compound, and” ..... 16

d. [1.c]: "propyl propionate,".....17

e. [1.d]: "wherein, based on a total weight of the electrolyte, a weight percentage of the dinitrile compound is X and a weight percentage of the trinitrile compound is Y, where X and Y meet conditions represented by Formula (1). . . about 2 wt % ≤ (X+Y) ≤ about 11 wt % (1);".....17

f. [1.e]: "and Formula (2). . . about 0.1 ≤ (X/Y) ≤ about 8 (2),".....18

g. [1.f]: "wherein, based on the total weight of the electrolyte, a weight percentage of the propyl propionate is Z, where Y and Z meet a condition represented by Formula (3): about 0.01 ≤ (Y/Z) ≤ about 0.3 (3)."....19

2. Claim 2: "The electrolyte according to claim 1, wherein the dinitrile compound comprises a compound of Formula (4) or (5). . ."....21

3. Claim 3: "The electrolyte according to claim 1, wherein the dinitrile compound is one selected from the group consisting of butanedinitrile. . . adiponitrile. . . ethylene glycol bis(2-cyanoethyl)ether. . . and any combination thereof. .....23

4. Claim 4: "The electrolyte according to claim 1, wherein the trinitrile compound comprises a compound of Formula (6) or (7). . ."....24

5. Claim 5: "The electrolyte according to claim 1, wherein the trinitrile compound is one selected from the group consisting of. . . 1,3,6-hexanetricarbonitrile. . . ." .....26

6. Claim 6 .....26

a. [6pre]: "The electrolyte according to claim 1,".....26

b. [6.a]: "wherein X is about 0.01-10 wt %,".....26

c. [6.b]: "Y is about 0.01-10 wt %,".....26

d. [6.c]: "and a weight percentage Z of the propyl propionate is about 5-50 wt %." .....27

7. Claim 11: "The electrolyte according to claim 1, further comprising one selected from a group consisting of: a cyclic carbonate ester having a carbon-carbon double bond, a fluorinated chain carbonate ester, a fluorinated cyclic carbonate ester, a compound having a sulfur-oxygen double bond, and any combination thereof." .....27

8. Claim 13 .....30

a. [13pre]: "An electrochemical device, wherein the electrochemical device comprises" .....30

b. [13.a]: "electrodes and" .....30

c. [13.b]-[13.g]: "an electrolyte comprising a dinitrile compound, a trinitrile compound, and propyl propionate, wherein, based on a total weight of the electrolyte, a weight percentage of the dinitrile compound is X and a weight percentage of the trinitrile compound is Y, where X and Y meet conditions represented by Formula (1) and Formula (2): about 2 wt % ≤ (X+Y) ≤ about 11 wt % (1); and about 0.1 ≤ (X/Y) ≤ about 8 (2)." .....31

9. Claim 16 .....31

a. [16pre]: "An electronic device, comprising" .....31

b. [16.a]-[16.h]: "an electrochemical device that includes electrodes and an electrolyte comprising a dinitrile compound, a trinitrile compound, and propyl propionate, wherein, based on a total weight of the electrolyte, a weight percentage of the dinitrile compound is X and a weight percentage of the trinitrile compound is Y, where X and Y meet conditions represented by Formula (1) and Formula (2): about 2 wt % ≤ (X+Y) ≤ about 11 wt % (1); and about 0.1 ≤ (X/Y) ≤ about 8 (2)." .....32

B. Ground 2: Claims 7-9 Are Obvious over Hong and Zhuang .....32

1. Motivation to Combine Hong and Zhuang .....32

2. Claim 7: "The electrolyte according to claim 1, further comprising a fluoroether comprising at least one of the compounds of Formula (8), Formula (9), Formula (10) or Formula (11). . ." .....38

3. Claim 8: "The electrolyte according to claim 7, wherein Rf1 or Rf2 is each independently a fluoroalkyl group selected from the group consisting of. . . $HCF_2CF_2$—. . . $CF_3CF_2$ . . . $HCF_2CF_2CH_2$—. . . ." .....42

4. Claim 9: "The electrolyte according to claim 7, wherein the fluoroether is one selected from the group consisting of $HCF_2CF_2CH_2OCF_2CF_2H$, $(CF_3)_2CFCF(CF_2CF_3)(OCH_3)$, $CF_3CHFCF_2CH(CH_3)OCF_2CHFCF_3$. . . and any combination thereof." .....43

C. Ground 3: Claim 10 Is Obvious over Hong and Kim '685 .....44

1. Motivation to Combine Hong and Kim '685 .....44

2. [10pre]: "The electrolyte according to claim 1, further comprising" .....48

3. [10.a]: "a cyclic phosphonic anhydride" .....48

4. [10.b]: "based on the total weight of the electrolyte, a content of cyclic phosphonic anhydride is about 0.01-10 wt%." .....50

D. Ground 4: Claim 12 Is Obvious over Hong and Kim '934 .....53

1. Motivation to Combine Hong and Kim '934 .....53

2. Claim 12: "The electrolyte according to claim 1, further comprising a cyclic carboxylate ester, including γ-butyrolactone or γ-valerolactone or a combination thereof." .....57

E. Ground 5: Claims 14-15 Are Obvious over Fujikawa and Hong .....58

1. Motivation to Combine Fujikawa and Hong .....58

2. Claim 14 .....63

a. [14pre]: "The electrochemical device according to claim 13,".....64

b. [14.a]: "wherein the electrode comprises a current collector and a coating on the current collector,".....64

c. [14.b]: "the coating comprising a single-sided coating and a double-sided coating, wherein: the single-sided coating is a coating formed by applying a slurry on one surface of the current collector; and the double-sided coating is a coating formed by applying a slurry on two opposite surfaces of the current collector; and".....64

d. [14.c]: "the electrode with the single-sided coating has an electrode compaction density D1, and the electrode with the double-sided coating has an electrode compaction density D2, wherein D1 and D2 meet the relationship: about $0.8 \leq D1/D2 \leq$ about 1.2.".....66

3. Claim 15: "The electrochemical device according to claim 14, wherein the electrodes comprise a cathode and a anode, wherein when the electrode is a cathode, 3.5 $g/cm^3 \leq D2 \leq 4.3\ g/cm^3$; or when the electrode is an anode, $1.2\ g/cm^3 \leq D2 \leq 1.8\ g/cm^3$." .....67

F. Ground 6: Claim 16 Is Obvious over Hong .....67

1. [16pre]: "An electronic device, comprising".....67

2. [16.a]-[16.h]: "an electrochemical device that includes electrodes and an electrolyte comprising a dinitrile compound, a trinitrile compound, and propyl propionate, wherein, based on a total weight of the electrolyte, a weight percentage of the dinitrile compound is X and a

weight percentage of the trinitrile compound is Y, where X and Y meet conditions represented by Formula (1) and Formula (2): about 2 wt % ≤ (X+Y) ≤ about 11 wt % (1); and about 0.1 ≤ (X/Y) ≤ about 8 (2).”.....68

VIII. THE BOARD SHOULD NOT EXERCISE ITS DISCRETION TO DENY INSTITUTION .....68

A. The Board Should Not Deny Institution Under § 325(d).....68

B. The Board Should Not Deny Institution Under § 314(a).....70

IX. MANDATORY NOTICES UNDER 37 C.F.R. § 42.8.....72

A. Real Parties-in-Interest.....72

B. Related Matters.....72

C. Lead and Backup Counsel.....73

D. Service Information.....74

X. GROUNDS FOR STANDING.....74

XI. PAYMENT OF FEES .....74

XII. CONCLUSION.....75

## EXHIBIT LIST

| Exhibit | Description |
|---|---|
| Ex. 1001 | U.S. Patent No. 10,833,363 |
| Ex. 1002 | File History for U.S. Patent No. 10,833,363 |
| Ex. 1003 | Declaration of Dr. Menahem Anderman dated February 23, 2023 |
| Ex. 1004 | Chinese Patent No. 106848381 ("Hong") |
| Ex. 1005 | Translation of Chinese Patent No. 106848381 ("Hong") |
| Ex. 1006 | U.S. Patent Pub. No. 2017/0084956 ("Zhuang") |
| Ex. 1007 | U.S. Patent No. 6,544,685 ("Kim '685") |
| Ex. 1008 | U.S. Patent Pub. No. 2017/0069934 ("Kim '934") |
| Ex. 1009 | U.S. Patent Pub. No. 2007/0172736 ("Fujikawa") |
| Ex. 1010 | Material Safety Data Sheet for Adiponitrile (ADN) |
| Ex. 1011 | Material Safety Data Sheet for Diethyl Carbonate (DEC) |
| Ex. 1012 | Material Safety Data Sheet for Ethylene Glycol Bis(propionitrile) Ether (DENE) |
| Ex. 1013 | Material Safety Data Sheet for Ethylene Sulfate (DTD) |
| Ex. 1014 | Material Safety Data Sheet for Ethylene Carbonate (EC) |
| Ex. 1015 | Material Safety Data Sheet for Fluoroethylene Carbonate (FEC) |
| Ex. 1016 | Material Safety Data Sheet for 1,3,6-Hexane Tricarbonitrile (HTCN) |
| Ex. 1017 | Material Safety Data Sheet for Lithium Hexafluorophosphate ($LiPF_6$) |

| Exhibit | Description |
|---|---|
| Ex. 1018 | Material Safety Data Sheet for Lithium bis(trifluoromethanesulfonyl)imide (LiTFSI) |
| Ex. 1019 | Material Safety Data Sheet for Propylene Carbonate (PC) |
| Ex. 1020 | Material Safety Data Sheet for Propyl Propionate (PP) |
| Ex. 1021 | Material Safety Data Sheet for 1,3-Propane Sultone (PS) |
| Ex. 1022 | Material Safety Data Sheet for Succinonitrile (SN) |
| Ex. 1023 | Material Safety Data Sheet for Propanephosphonic Acid Anhydride (T3P) |
| Ex. 1024 | Material Safety Data Sheet for Vinylethylene Carbonate (VEC) |
| Ex. 1025 | Seward, et al., "The Dielectric Constants of Ethylene Carbonate and of Solutions of Ethylene Carbonate in Water, Methanol, Benzene and Propylene Carbonate," *J. Phys. Chem.*, 62:1, 127-128 (1958) |
| Ex. 1026 | Declaration of Kelley Hayes Greenhill dated February 23, 2023 |
| Ex. 1027 | ACS Common Organic Solvents Table of Properties |
| Ex. 1028 | ATL's Infringement Contentions regarding the '363 patent in *Ningde Amperex Tech. Ltd. v. Zhuhai CosMX Battery Co., Ltd.*, Civ. No. 2:22-cv-00232-JRG (E.D. Tex.) |
| Ex. 1029 | Docket Control Order in *Ningde Amperex Tech. Ltd. v. Zhuhai CosMX Battery Co., Ltd.*, Civ. No. 2:22-cv-00232-JRG (E.D. Tex.) |
| Ex. 1030 | United States District Court Judicial Caseload Profile |
| Ex. 1031 | ATL's Amended Complaint filed in *Ningde Amperex Tech. Ltd. v. Zhuhai CosMX Battery Co., Ltd.*, Civ. No. 2:22-cv-00232-JRG (E.D. Tex.) |

| Exhibit | Description |
| --- | --- |
| Ex. 1032 | ATL's Complaint filed in *Ningde Amperex Tech. Ltd. v. Zhuhai CosMX Battery Co., Ltd.*, Civ. No. 2:22-cv-00232-JRG (E.D. Tex.) |

## TABLE OF AUTHORITIES

**Page(s)**

**Federal Cases**

*Advanced Bionics, LLC v. MED-EL Elektromedizinische Geräte GmbH*,
IPR2019-01469, Paper 6 (P.T.A.B. Feb. 13, 2020).....69

*Apple Inc. v. Fintiv, Inc.*
IPR2020-00019, Paper 11 (P.T.A.B. Mar. 20, 2020).....70

*Free Motion Fitness, Inc. v. Cybex Int'l, Inc.*,
423 F.3d 1343 (Fed. Cir. 2005).....13

*Nearmap US, Inc. v. Eagle View Techs., Inc.*,
IPR2022-01009, Paper 7.....71

*NetNut v. Bright Data*,
IPR2021-01492, Paper 12 (Mar. 21, 2022).....72

*Ningde Amperex Tech. Ltd. v. Zhuhai CosMX Battery Co., Ltd.*,
Civ. No. 2:22-cv-00232-JRG (E.D. Tex.).....70, 73

*Oticon Medical AB v. Cochlear Limited*,
IPR2019-00975, Paper 15 (PTAB Oct. 16, 2019).....70

*Protect Animals with Satellites v. OnPoint Sys.*,
IPR2021-01483, Paper 11 (Mar. 4, 2022).....72

*Western Digital Corp. v. Kuster*,
IPR2020-01391, Paper 10 (PTAB Feb. 16, 2021).....70

**Federal Statutes**

35 U.S.C. § 102.....*passim*

35 U.S.C. § 103.....7

35 U.S.C. § 314(a).....70

35 U.S.C. § 315(b).....70

**Regulations**

37 C.F.R. § 42.8 ..... 73

37 C.F.R. § 42.15(a) ..... 75

37 C.F.R. § 42.103(a) ..... 75

Zhuhai CosMX Battery Co., Ltd ("CosMX" or "Petitioner") requests *inter partes* review to cancel claims 1–16 of U.S. Patent No. 10,833,363 ("the '363 patent") (Ex. 1001), assigned on its face to Ningde Amperex Technology Limited ("ATL" or "Patent Owner"). The challenged claims are unpatentable under 35 U.S.C. §§ 102(a)(1) and/or 103(a).

## I. INTRODUCTION

The '363 patent aims to improve stability of lithium-ion batteries at high voltages by increasing the durability of the protective film formed on the cathode. To achieve increased durability of the protective film, the '363 patent describes, and claims, electrolytes and electrochemical devices and electronic devices that include electrolytes comprising a dinitrile compound, a trinitrile compound, and propyl propionate that fall within specific formulaic ranges. Dinitrile compounds, trinitrile compounds, and propyl propionate were all known battery electrolyte components before the '363 patent; therefore, the recited formulas were critical to ATL obtaining the '363 patent.

ATL's claims 1-6, 11, 13, and 16 are anticipated by the prior art. The remaining claims recite the addition of known electrolyte components and battery structures that achieve known effects and would have been obvious to a person of ordinary skill in the art at the time of the alleged invention. As the '363 patent acknowledges, by its filing date, "electrochemical devices with a working voltage above 4.4V [had]

become a hot research area in many research institutes and enterprises." Ex. 1001, 1:24-26. Several research groups indeed proposed the same solution to the same problem before ATL's earliest possible priority date of September 21, 2018. In fact, a research group at Guangzhou Tinci Materials Technology Co. proposed electrolytes for electrochemical devices comprising a dinitrile compound, a trinitrile compound, and propyl propionate in proportions that collectively span almost the entirety of each formulaic range recited in the '363 patent claims.

As explained below and in the attached Declaration of Dr. Menahem Anderman, an expert in lithium-ion battery development, the prior art anticipates multiple claims and renders the remaining claims obvious. Ex. 1003, ¶¶1-35. Accordingly, claims 1-16 of the '363 patent should be cancelled.

## II. TECHNOLOGY BACKGROUND

### A. The Core Technology in Lithium-Ion Batteries Is Decades Old

Lithium-ion batteries have been commercially available since 1991 and have become a popular power source for small portable and other electronic devices because of their high energy density. *See* Ex. 1005, ¶2; Ex. 1009, ¶2. Ex. 1003, ¶36.

A typical lithium-ion battery contains a positive electrode (cathode), a negative electrode (anode), a separator, and an electrolyte. The cathode typically comprises a current collector and a layered active material that in the discharged state contains lithium, while the anode typically comprises a current collector with

a layered active material capable of receiving lithium ions. The separator prevents contact between the cathode and anode, which would otherwise cause a short circuit. The electrolyte serves as the medium through which lithium ions travel between the cathode and the anode, and comprises lithium salt, solvent, and optionally additives. Ex. 1003, ¶37.

Lithium-ion batteries operate via a "rocking-chair" mechanism, so called because the lithium ions move or "rock" back and forth between the cathode and anode as the battery charges and discharges. Ex. 1003, ¶38. As shown in Figure 1 below, charging the battery dislodges lithium from the cathode in the form of lithium ions. Those lithium ions enter the electrolyte, forcing lithium ions already present in the electrolyte to move into the anode. The dislodging of the lithium ions from the cathode leaves free electrons in the cathode. Those free electrons cannot diffuse into the electrolyte but instead flow through an external circuit into the anode where they recombine with the lithium ions in the anode. This process creates an electrochemical potential between the anode and the cathode. Ex. 1003, ¶39.

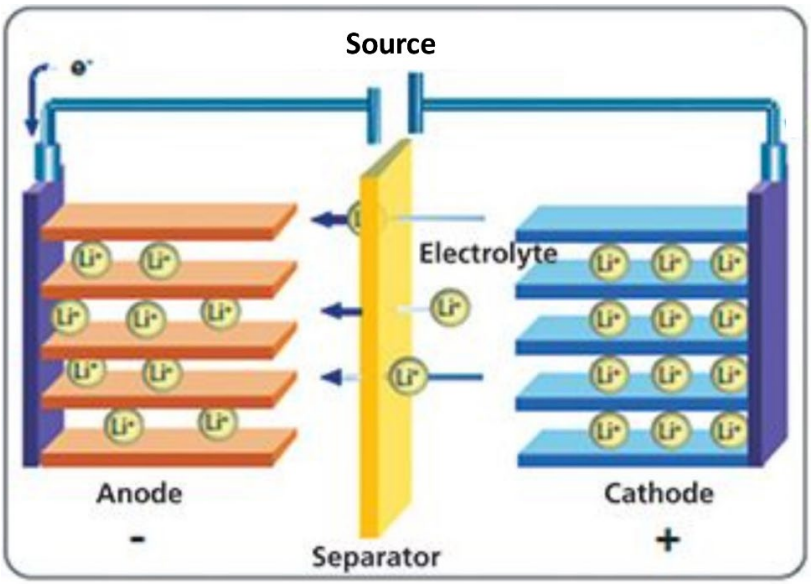


***Figure 1**: Charging Mechanism for a Lithium-Ion Battery*

During discharge, the reverse electrochemical process occurs, as shown in Figure 2 below. When a load is connected between the anode and cathode, it creates a pathway for electrons to flow between the anode and the cathode. The difference in electrochemical potential drives electrons from the anode to the cathode through the load, providing power to the load. The release of electrons from the anode also dislodges lithium ions from the anode into the electrolyte, which causes lithium ions in the electrolyte to enter the cathode, where they recombine with electrons from the anode. Ex. 1003, ¶40.

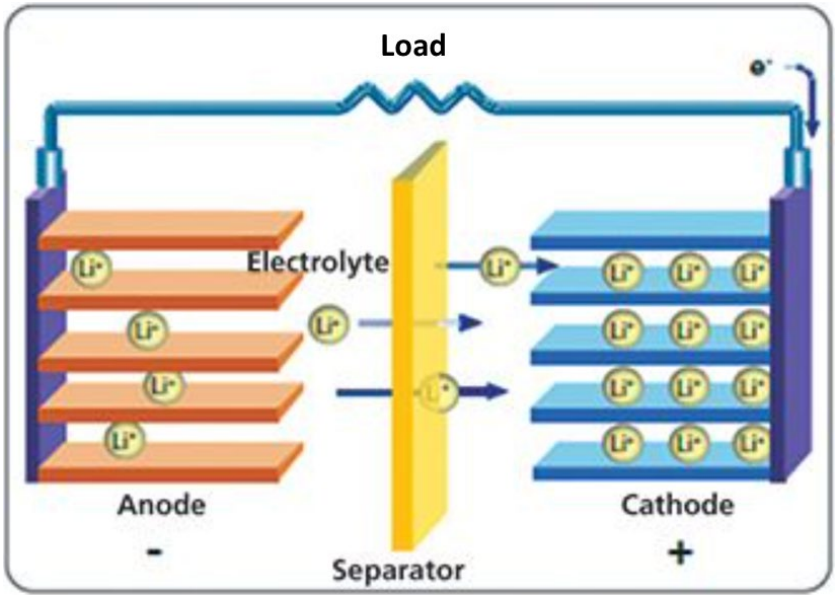


***Figure 2**: Discharge Mechanism for a Lithium-Ion Battery*

One charge-discharge sequence is called a cycle.[1] In contrast with primary batteries like alkaline batteries, which cannot be recharged because they irreversibly consume chemical energy in the cathode, lithium-ion batteries are secondary (rechargeable) batteries that can be cycled many times. The discharge reaction in lithium-ion batteries can be reversed by forcing a lithium ion to reversibly return to the anode, thereby returning the battery to its composition and structure for additional cycles. Ex. 1003, ¶¶41-42.

[1] An animation showing a charge-discharge cycle is available here: https://www.energy.gov/eere/articles/how-does-lithium-ion-battery-work. Ex. 1003, ¶41.

### B. The Claimed Electrolytes Were Known to Improve the Stability of the SEI Layer

As the medium through which lithium ions travel between the cathode and the anode, the electrolyte must remain stable. *See* § II.A, *supra*. One feature that helps maintain the electrolyte stability is the solid electrolyte interphase ("SEI") layer. The SEI layer is a passivating layer formed on the electrode through partial decomposition of the electrolyte, predominantly during the first cycle, that inhibits further electrolyte decomposition during later cycles. It is electronically insulating but ionically conductive, at least for lithium ions, meaning that it allows lithium ions to pass through it but not electrons. Ex. 1003, ¶43.

As the demand for higher energy density pushed manufacturers to increase the voltage of lithium-ion batteries, stability of the SEI layer became more important. *See, e.g.*, Ex. 1005, ¶2 ("[I]t is easy for the SEI film formed on the surface of a battery's electrode to be damaged under a high voltage or a high temperature."). As was known in the lithium-ion battery industry prior to the '363 patent, the SEI layer became more stable with electrolytes comprising propyl propionate, a dinitrile compound, and a trinitrile compound. *See* Ex. 1005, ¶¶34-43. Ex. 1003, ¶44.

## III. IDENTIFICATION OF CHALLENGES AND PRIOR ART REFERENCES RELIED UPON

Claims 1–16 of the ’363 patent are unpatentable and should be cancelled in view of the below references. The specific grounds are:

| Ground | Claims | Description |
|---|---|---|
| 1 | 1-6, 11, 13, 16 | Anticipated under 35 U.S.C. § 102 by Hong. |
| 2 | 7-9 | Obvious under 35 U.S.C. § 103 over Hong and Zhuang. |
| 3 | 10 | Obvious under 35 U.S.C. § 103 over Hong and Kim ’685. |
| 4 | 12 | Obvious under 35 U.S.C. § 103 over Hong and Kim ’934. |
| 5 | 14-15 | Obvious under 35 U.S.C. § 103 over Fujikawa and Hong. |
| 6 | 16 | Obvious under 35 U.S.C. § 103 over Hong. |

### A. Hong

Chinese Patent No. 106848381 (“**Hong**”) (Exs. 1004/1005), published on June 13, 2017. Hong is prior art to the ’363 patent under 35 U.S.C. §§ 102(a)(1). Ex. 1003, ¶45.

Hong is directed to electrolytes for rechargeable lithium batteries comprising a tricyanophosphite or tricyanophosphate functional compound. Ex. 1005, ¶¶5-9. Like the ’363 patent, Hong identifies high voltages as a concern for the stability of the SEI layer. Ex. 1005, ¶2 (“[I]t is easy for the SEI film formed on the surface of a

battery's electrode to be damaged under a high voltage or a high temperature."). Also, like the '363 patent, Hong recognizes the insufficiency of dinitrile compounds when used as the sole additive and explains that the trinitrile tricyanophosphite/tricyanophosphate compounds result in a stable SEI layer on the cathode, among other benefits. Ex. 1005, ¶¶2-4, 17-18. Hong discloses that the electrolyte may also contain the trinitrile compound 1,3,6-hexanetricarbonitrile (HTCN). Ex. 1005, ¶¶15, 35. Hong discloses exemplary embodiments of an electrolyte comprising propyl propionate as an organic solvent and dinitrile and trinitrile compounds as additives that achieve Hong's stated objectives. *See* Ex. 1005, ¶¶34-43. Ex. 1003, ¶46.

**B. Zhuang**

U.S. Patent App. Pub. No. 2017/0084956 ("**Zhuang**") (Ex. 1006), published on March 23, 2017, from U.S. Application No. 15/014.365, filed February 3, 2016. Zhuang is prior art to the '363 patent under 35 U.S.C. §§ 102(a)(1) and 102(a)(2). Ex. 1003, ¶47.

Zhuang is directed to electrolytes comprising a fluoroether compound, a carboxylate compound such as propyl propionate, and a dinitrile compound comprising an ether bond such as ethylene glycol bis(propionitrile) ether (DENE). Ex. 1006, ¶¶5, 10. Zhuang states that the recited electrolyte can improve lithium-ion

battery high-temperature storage performance, high-temperature cycle life performance, and rate performance. Ex. 1006, ¶5. Ex. 1003, ¶48.

### C. Kim ’685

U.S. Patent No. 6,544,685 (“**Kim ’685**”) (Ex. 1007), issued on April 8, 2003, from U.S. Application No. 09/766,056, filed January 19, 2001. Kim ’685 is prior art to the ’363 patent under 35 U.S.C. §§ 102(a)(1) and 102(a)(2). Ex. 1003, ¶49.

Kim ’685 is directed to electrolytes comprising a non-aqueous organic solvent and an alkylphosphonic acid cyclic anhydride, which is a type of cyclic phosphonic anhydride. Ex. 1007, 3:26-42. Kim ’685 explains that the cyclic phosphonic anhydride mitigates carbonate solvent decomposition and reduces battery expansion. Ex. 1007, 3:14-25. Ex. 1003, ¶50.

### D. Kim ’934

U.S. Patent App. Pub. No. 2017/0069934 (“**Kim ’934**”) (Ex. 1008), published on March 9, 2017, from U.S. Application No. 15/177,628, filed June 9, 2016. Kim ’934 is prior art to the ’363 patent under 35 U.S.C. §§ 102(a)(1) and 102(a)(2). Ex. 1003, ¶51.

Kim ’934 is directed to electrolytes comprising trinitrile compounds and cyclic carboxylate esters. Ex. 1008, ¶¶10-13. Kim ’934 explains that the combination of the trinitrile compounds, such as 1,3,6-hexanetricarbonitrile (HTCN), and the

cyclic carboxylate esters, such as γ-butyrolactone, synergistically improves the stability of the SEI layer on the cathode. Ex. 1008, ¶¶38-41. Ex. 1003, ¶52.

### E. Fujikawa

U.S. Patent App. Pub. No. 2007/0172736 ("**Fujikawa**") (Ex. 1009), published on July 26, 2007, from U.S. Application No. 11/698,094, filed January 26, 2007. Fujikawa is prior art to the '363 patent under 35 U.S.C. §§ 102(a)(1) and 102(a)(2). Ex. 1003, ¶53.

Fujikawa is directed to improvements to lithium-ion battery structure. It discloses batteries comprising a heat-resistant layer between the cathode and the anode, including into batteries having a coating comprising a single-sided coating and a double-sided coating on both the cathode and the anode. Ex. 1009, ¶¶6, 19-20, 96-97. Fujikawa discloses that a coating comprising a single-sided coating and a double-sided coating can enable excellent high output characteristics. Ex. 1009, ¶116. Ex. 1003, ¶54.

## IV. THE ALLEGED INVENTION OF THE '363 PATENT

The '363 patent issued on November 10, 2020, from U.S. Application No. 16/211,853, filed December 6, 2018. It asserts priority to Chinese Application No. 2018 1 1108529, filed on September 21, 2018. For the purposes of this IPR, Petitioner assumes a priority date of September 21, 2018. Ex. 1003, ¶55.

### A. Specification

Like Hong, the ’363 patent identifies electrolyte decomposition at high voltages as a concern, stating that “at high voltages, the oxidation activity of the positive electrode material increases, and the stability decreases, which makes the electrolyte decompose on the surface of the positive electrode easily or cause deterioration of the battery material, resulting in a decrease in battery capacity.” Ex. 1001, 1:26-31. Like Hong, the ’363 patent acknowledges that one known strategy for improving electrolyte stability involved incorporating a dinitrile compound to “form a protective film on the cathode of the electrochemical device, so as to inhibit the decomposition of the solvent in the electrochemical device.” Ex. 1001, 1:43-46. However, an electrolyte comprising a dinitrile compound alone produced an unstable film. Ex. 1001, 1:46-49. Thus, the ’363 patent purports to use “a mixture of a dinitrile compound, a trinitrile compound and propyl propionate [that forms] a firm protective film which is not easily decomposed on the surface of the cathode at a high potential,” the same solution already taught by Hong. Ex. 1001, 1:49-54. Ex. 1003, ¶¶56-60.

### B. Summary of Relevant Prosecution History of the ’363 Patent

The Examiner issued one prior art-based rejection during prosecution of the ’363 patent, rejecting the claims as obvious over Ohashi as the primary reference. Ex. 1002, 815-821. In response, Applicant argued that Ohashi did not teach or

suggest the claimed formulaic ranges and that "the results yielded by the claimed invention are unexpected in view of the cited prior art." Ex. 1002, 859-861. The Examiner's Notice of Allowance indicates acceptance of both arguments. Ex. 1002, 869-870. Ex. 1003, ¶61.

## V. LEVEL OF ORDINARY SKILL IN THE ART

Petitioner submits that a person of ordinary skill in the art for the field of the '363 patent would have a Ph.D. or a similar advanced degree in chemistry, chemical engineering, materials science, or a related field, and two or more years of experience related to the design, research, evaluation, preparation, and/or manufacture of electrochemical energy storage devices. This level of skill is approximate, and more experience would compensate for less formal education, and vice versa. It is consistent with the field provided by the '363 patent: "The present disclosure relates to the technical field of energy storage technologies, in particular to an electrolyte and an electrochemical device containing the electrolyte." Ex. 1001, 1:13-15. Ex. 1003, ¶¶24-25.

## VI. CLAIM CONSTRUCTION

| Claim Term | Proposed Construction |
|---|---|
| "a weight percentage of the dinitrile compound is X" | "the total weight percentage of all dinitrile compounds in the electrolyte is X" |
| "a weight percentage of the trinitrile compound is Y" | "the total weight percentage of all trinitrile compounds in the electrolyte is Y" |

Claim 1 of the ’363 patent recites “[a]n electrolyte, comprising a dinitrile compound, [and] a trinitrile compound. . . wherein, based on a total weight of the electrolyte, a weight percentage of the dinitrile compound is X and a weight percentage of the trinitrile compound is Y.” Ex. 1001, claim 1. For the purposes of this proceeding, Petitioner construes “a weight percentage of the dinitrile compound is X” to mean “the total weight percentage of all dinitrile compounds in the electrolyte is X” and “a weight percentage of the trinitrile compound is Y” to mean “the total weight percentage of all trinitrile compounds in the electrolyte is Y.” Ex. 1003, ¶62.

These constructions are consistent with Federal Circuit law, the text of the claims, and the plain and ordinary meaning of the terms.[2] “Like the words ‘a’ and ‘an,’ the word ‘the’ is afforded the same presumptive meaning of ‘one or more’ when used with the transitional phrase ‘comprising.’” *Free Motion Fitness, Inc. v. Cybex Int’l, Inc.*, 423 F.3d 1343, 1350–51 (Fed. Cir. 2005). That presumption holds true here, as confirmed by the text of dependent claims 2-5. *See* Ex. 1001, claim 2 (“the

[2] These constructions are also consistent with the constructions implicitly adopted by ATL in its infringement contentions in the co-pending district court litigation. *See* Ex. 1028, 10 (calculating “X” based on the sum of two dinitrile components). Ex. 1003, ¶62.

dinitrile compound comprises a compound of Formula (4) or (5). . . *or a combination thereof*") (emphasis added); claim 3 ("the dinitrile compound is one selected from the group consisting of. . . and *any combination thereof*") (emphasis added); claim 4 ("the trinitrile compound comprises a compound of Formula (6) or (7). . . or a combination thereof"); claim 5 ("The electrolyte according to claim 1, wherein the trinitrile compound is one selected from the group consisting of. . . and *any combination thereof*.") (emphasis added). Finally, Petitioner's expert, Dr. Anderman, has explained that these constructions are consistent with the plain and ordinary meaning the terms would have to a person of ordinary skill in the art at the time of the invention. Ex. 1003, ¶62.

## VII. CLAIMS 1-16 OF THE '363 PATENT ARE UNPATENTABLE

### A. Ground 1: Claims 1-6, 11, 13, and 16 Are Anticipated by Hong

#### 1. Claim 1

At least Embodiments 2-15, 18, 20-21, and 25 and Comparison Case 6 ("CC6") of Hong anticipate claim 1. For purposes of the present IPR, Petitioner highlights Embodiments 2, 18, 25, and CC6 as representative examples because they demonstrate that Hong discloses anticipatory embodiments that collectively span almost the entirety of each range recited in Formulas (1)-(3). *See* Table 1; Ex. 1005, ¶¶34-35. The dinitrile compounds are highlighted in blue, the trinitrile compounds in green, and the propyl propionate component in red. "[P]ercentage refers to the

mass percentage in the final electrolyte, and concentration refers to the concentration in the final electrolyte." Ex. 1005, ¶38. Ex. 1003, ¶¶65-66.

| | **Organic solvent (wt ratio)** | **Additive (wt %)** | **Functional compound (wt %)** | **Electrolyte substance** |
|---|---|---|---|---|
| Embodiment 2 | EC:PP:DEC:PC = 25:**25**:40:10 | 3% PS, 5% FEC, 2% ADN, 1% SN, 0.3% VEC, 1% DENE | 0.8% Compound $I_1$ | 1.1 M $LiPF_6$ |
| Embodiment 18 | EC:PP:DEC:PC = 25:**25**:40:10 | 3% PS, 5% FEC, 2% ADN, 1% SN, 0.3% VEC, 1% DENE | 5% Compound $I_1$ | 1.1 M $LiPF_6$ |
| Embodiment 25 | EC:PP:DEC:PC = 25:**25**:40:10 | 3% PS, 5% FEC, 2% ADN, 1% SN, 0.5% DTD, 1% DENE, 0.5% HTCN | 1.5% Compound $II_6$ | 1.0 M $LiPF_6$ +0.5 M LiTFSI |
| Comparison Case 6 | EC:PP:DEC:PC = 25:**25**:40:10 | 3% PS, 5% FEC, 2% ADN, 1% SN, 0.5% DTD, 1% DENE, 0.5% HTCN | -- | 1.0 M $LiPF_6$ +0.5 M LiTFSI |

***Table 1**: Composition of Certain Anticipatory Embodiments in Hong*

**a. [1pre]: "An electrolyte, comprising"**

To the extent the preamble is limiting, Hong discloses electrolytes, including example Embodiments 2, 18, 25, and CC6. Ex. 1005, ¶¶6-7, 34-35. Ex. 1003, ¶67.

**b. [1.a]: "a dinitrile compound"**

Hong discloses electrolytes comprising a dinitrile compound. The '363 patent describes a "dinitrile compound" as "a compound comprising two cyano groups." Ex. 1001, 1:39-41. Hong's Embodiments 2, 18, 25, and CC6 contain the dinitrile

compounds succinonitrile (SN), adiponitrile (ADN), and ethylene glycol bis(propionitrile) ether (DENE), each of which comprises two cyano groups. Ex. 1005, ¶¶34-35. Ex. 1003, ¶68.

**c. [1.b]: "a trinitrile compound, and"**

Hong discloses electrolytes further comprising a trinitrile compound. Ex. 1005, ¶¶5-9. The '363 patent describes a "trinitrile compound" as "a compound comprising three cyano groups." Ex. 1001, 1:41-42. Hong discloses tricyanophosphite and tricyanophosphate "functional" compounds as electrolyte additives. *See* Ex. 1005, ¶¶7-9, 19-24. Each tricyanophosphite and tricyanophosphate is a trinitrile compound comprising three cyano groups. Hong also discloses that the electrolyte may further comprise the trinitrile compound 1,3,6-hexane tricarbonitrile (HTCN). *See* Ex. 1005, ¶¶15, 34-35. Ex. 1003, ¶¶69-85.

Embodiments 2 and 18 contain the tricyanophosphite Compound $I_1$. Ex. 1005, ¶¶34-35. Figure 3 below highlights the cyano groups in Compound $I_1$. Ex. 1003, ¶72.

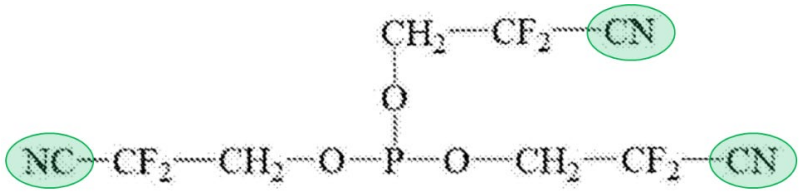


***Figure 3**: Structure of Compound $I_1$ in Hong's Embodiments 2 and 18*

Embodiment 25 contains the tricyanophosphate Compound $II_6$, as well as 1,3,6-hexane tricarbonitrile (HTCN). Ex. 1005, ¶35. Figure 4 below highlights the cyano groups in Compound $II_6$. Ex. 1003, ¶84.

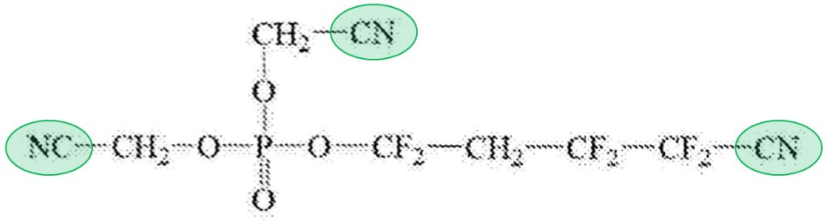


***Figure 4**: Structure of the Compound $II_6$ in Hong's Embodiment 25*

Comparison Case 6 contains 1,3,6-hexane tricarbonitrile (HTCN). Ex. 1005, ¶35. Ex. 1003, ¶86.

**d. [1.c]: "propyl propionate,"**

Hong discloses electrolytes that further comprise propyl propionate. Ex. 1005, ¶13. Embodiments 2, 18, 25, and CC6 of Hong contain propyl propionate (PP) as a co-solvent in the electrolyte. Ex. 1005, ¶¶34-35. Ex. 1003, ¶87.

**e. [1.d]: "wherein, based on a total weight of the electrolyte, a weight percentage of the dinitrile compound is X and a weight percentage of the trinitrile compound is Y, where X and Y meet conditions represented by Formula (1). . . about 2 wt % ≤ (X+Y) ≤ about 11 wt % (1);"**

Hong discloses electrolytes satisfying Formula (1). As shown in Table 2 below, Embodiments 2, 18, 25, and CC6 contain 4 total wt % of dinitrile compounds (i.e., X = 4 wt %) and between 0.5-5 total wt % of trinitrile compounds (i.e., Y = 0.5-

5 wt %). Thus, Embodiments 2, 18, 25, and CC6 disclose electrolytes wherein X+Y equals between 4.5-9, which is within the range of Formula (1). Ex. 1003, ¶¶88-95.

| Example | Dinitrile wt % (X) | Trinitrile wt % (Y) | Formula (1) (X + Y) |
|---|---|---|---|
| Embodiment 2 | 4 | 0.8 | 4.8 |
| Embodiment 18 | 4 | 5 | 9 |
| Embodiment 25 | 4 | 2.0 | 6.0 |
| Comparison Case 6 | 4 | 0.5 | 4.5 |

***Table 2**: Calculation of Formula (1) for Hong's Embodiments 2, 18, 25, and CC6*

**f. [1.e]: "and Formula (2). . . about 0.1 ≤ (X/Y) ≤ about 8 (2),"**

Hong discloses electrolytes satisfying Formula (2). As shown in Table 3 below, Embodiments 2, 18, 25, and CC6 contain 4 total wt % of dinitrile compounds (i.e., X = 4 wt %) and between 0.5-5 total wt % of trinitrile compounds (i.e., Y = 0.5-5 wt %). Ex. 1005, ¶¶34-35; *see also* § VII.A.1.e, *supra*. Thus, Embodiments 2, 18, 25, and CC6 disclose electrolytes wherein X/Y equals between 0.8-8.0, which is within the range of Formula (2). Ex. 1003, ¶¶96-103.

| Example | Dinitrile wt % (X) | Trinitrile wt % (Y) | Formula (2) (X/Y) |
|---|---|---|---|
| Embodiment 2 | 4 | 0.8 | 5.0 |
| Embodiment 18 | 4 | 5 | 0.8 |
| Embodiment 25 | 4 | 2.0 | 2.0 |

| | | | |
|---|---|---|---|
| Comparison Case 6 | 4 | 0.5 | 8.0 |

***Table 3**: Calculation of Formula (2) for Hong's Embodiments 2, 18, 25, and CC6*

**g. [1.f]: "wherein, based on the total weight of the electrolyte, a weight percentage of the propyl propionate is Z, where Y and Z meet a condition represented by Formula (3): about 0.01 ≤ (Y/Z) ≤ about 0.3 (3)."**

Hong discloses electrolytes satisfying Formula (3). As described in Sections VII.A.1.e and VII.A.1.f above, Embodiment 2, 18, 25, and CC6 contain between 0.5-5 total wt % of trinitrile compounds (i.e., Y = 0.5-5 wt %). Ex. 1005, ¶¶34-35. Hong further discloses that propyl propionate (PP) accounts for 25 wt % of the base solvent for Embodiments 2, 18, 25, and CC6. Ex. 1005, ¶¶34-35. That base solvent is then mixed with lithium salt(s) and various additives to produce the exemplary electrolytes. Ex. 1005, ¶¶25-29, 34-35. Ex. 1003, ¶¶104-106.

Petitioner's Expert, Dr. Anderman, used Hong's description of the electrolyte preparation method and proportions of each component to determine the propyl propionate weight percentage (Z) in Embodiments 2, 18, 25, and CC6. Dr. Anderman's calculations incorporate three assumptions: (1) the total volume of the liquid components does not meaningfully change after mixing, (2) the solid components do not meaningfully contribute to the total volume of the electrolyte, and (3) Hong's tricyanophosphate and tricyanophosphite compounds are liquids at room temperature with a density of 0.60 g/cm$^3$. These assumptions are justified by

Dr. Anderman's experience, the similarity of the solvent components, the common effect of solutes on solvent organization, and the known densities of common organic compounds. Further, this is the same process and these are the same assumptions that a person of ordinary skill in the art would have used in determining the weight percentage of propyl propionate in Hong's electrolytes. Ex. 1003, ¶¶107-120.

Dr. Anderman explains that propyl propionate (PP) accounts for between 16.1-18.4 wt % of the total electrolyte in Embodiments 2, 18, 25, and CC6 (i.e., Z = 16.1-18.4 wt %[3]), as shown in Table 4 below. Thus, for Embodiments 2, 18, 25, and CC6, Y/Z equals between 0.030-0.289, as shown in Table 4 below, which is within the range of Formula (3). Ex. 1003, ¶¶121-129.

[3] The PP weight percentage in the total electrolyte differs for Embodiments 2, 18, 25, and CC6, despite their having the same PP weight percentage in the base solvent, because they contain different additives in different proportions. Ex. 1003, ¶129.

| Example | Trinitrile wt % (Y) | PP wt % (Z) | Formula (3) (Y/Z) |
|---|---|---|---|
| Embodiment 2 | 0.8 | 18.4 | 0.043 |
| Embodiment 18 | 5 | 17.3 | 0.289 |
| Embodiment 25 | 2.0 | 16.1 | 0.124 |
| Comparison Case 6 | 0.5 | 16.5 | 0.030 |

***Table 4**: Values for Y, Z, and Formula (3) in Hong's Embodiments 2, 18, 25, and CC6*

Even if one or more of these assumptions were set aside, Embodiments 2, 18, 25, and CC6 still satisfy Formula (3). If the assumptions were set aside, propyl propionate could account for no more than 25 wt %[4] and no less than 15.3-18.1 wt % of the total electrolyte in Embodiments 2, 18, 25, and CC6. And Y/Z could equal no less than 0.020-0.200 and no more than 0.032-0.294. Ex. 1003, ¶¶130-151.

**2. Claim 2: "The electrolyte according to claim 1, wherein the dinitrile compound comprises a compound of Formula (4) or (5). . ."**

Hong anticipates claim 2 of the '363 patent. Claim 2 recites:

[4] The actual upper bound for the weight percentage of propyl propionate would be less than 25 wt %. Hong's electrolytes comprise a base solvent, lithium salt(s), and additives. Propyl propionate is 25 wt % of the base solvent, but that number does not account for the weight of the lithium salt(s) or additives. Ex. 1003, ¶139.

> The electrolyte according to claim 1, wherein the dinitrile compound comprises a compound of Formula (4) or (5):
>
> CN—R1—CN (4);
>
> CN—R2—(O—R3)$_n$—O—R4—CN (5);
>
> or a combination thereof,
>
> where R1, R2, R3 and R4 are each independently an alkylene group having 1-5 carbon atoms or an alkenylene group having 2-5 carbon atoms, and n represents an integer from 0 to 5.

Ex. 1001, claim 2. Ex. 1003, ¶¶152-153.

As explained in Section VII.A.1 above, each of Embodiments 2, 18, 25, and CC6 of Hong discloses an electrolyte containing succinonitrile (SN), adiponitrile (ADN), and ethylene glycol bis(propionitrile) ether (DENE). Ex. 1005, ¶¶34-35. Ex. 1003, ¶154.

Succinonitrile (SN) is a compound of Formula (4), wherein R1 is an alkylene group having 2 carbon atoms, as shown in Figure 5 below. Ex. 1003, ¶155.

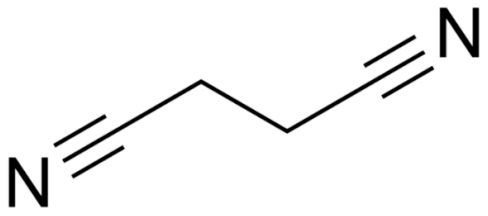


***Figure 5****: Structure of Succinonitrile (SN)*

Adiponitrile (ADN) is a compound of Formula (4), wherein R1 is an alkylene group having 4 carbon atoms, as shown in Figure 6 below. Ex. 1003, ¶156.

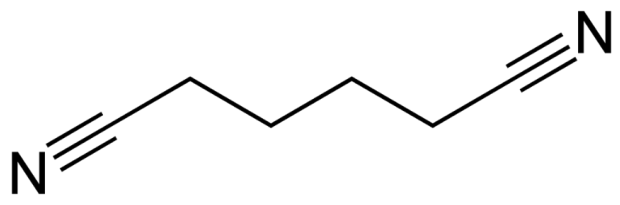


***Figure 6****: Structure of Adiponitrile (ADN)*

Ethylene glycol bis(propionitrile) ether (DENE) is a compound of Formula (5), wherein R2, R3, and R4 are each alkylene groups having 2 carbon atoms and n is 1, as shown in Figure 7 below. Ex. 1003, ¶157.

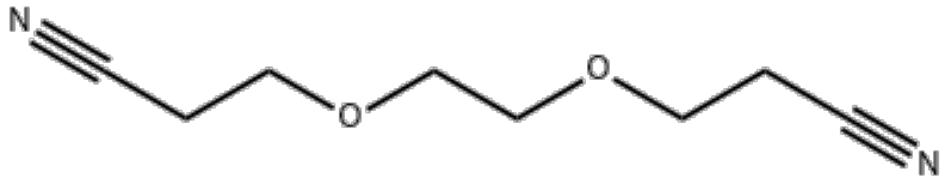


***Figure 7****: Structure of DENE*

**3. Claim 3: "The electrolyte according to claim 1, wherein the dinitrile compound is one selected from the group consisting of butanedinitrile. . . adiponitrile. . . ethylene glycol bis(2-cyanoethyl)ether. . . and any combination thereof.**

Hong anticipates claim 3 of the '363 patent. As explained in Section VII.A.1 above, each of Embodiments 2, 18, 25, and CC6 of Hong discloses an electrolyte containing succinonitrile (SN), adiponitrile (ADN), and ethylene glycol bis(propionitrile) ether (DENE). Ex. 1005, ¶¶34-35. A person of ordinary skill in the art would understand that butanedinitrile and succinonitrile are alternative names for

the same compound. *See* Ex. 1022, 2. A person of ordinary skill in the art would also understand that ethylene glycol bis(2-cyanoethyl)ether and ethylene glycol bis(propionitrile) ether are alternative names for the same compound. Ex. 1012, 2. Ex. 1003, ¶¶158-159.

### 4. Claim 4: "The electrolyte according to claim 1, wherein the trinitrile compound comprises a compound of Formula (6) or (7). . ."

Hong anticipates claim 4 of the '363 patent. Claim 4 recites:

> The electrolyte according to claim 1,
>
> wherein the trinitrile compound comprises a compound of Formula (6) or (7):
>
> 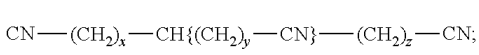
> (6)
>
> 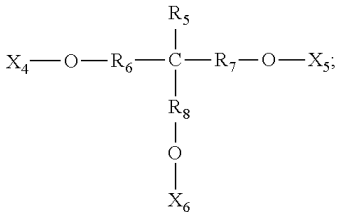
> (7)
>
> or a combination thereof,
>
> where in Formula (6), x, y, and z represent an integer from 0 to 5, and x, y, and z are not 0 at the same time; and
>
> in Formula (7), R5 represents hydrogen or an alkyl group having 1-5 carbon atoms, R6, R7 and R8 are each

> independently an alkylene group having 1-5 carbon atoms, and X4, X5 and X6 are each independently —R9—CN, in which R9 represents an alkylene group having 1-5 carbon atoms.

Ex. 1001, claim 4. Ex. 1003, ¶¶160-161.

As explained in Section VII.A.1 above, Embodiments 25 and CC6 of Hong contain 1,3,6-hexanetricarbonitrile (HTCN). Ex. 1005, ¶¶34-35. 1,3,6-hexane tricarbonitrile (HTCN) is a trinitrile compound of Formula (6), wherein x = 2, y = 0, and z = 3, as shown in Figure 8 below. Ex. 1003, ¶¶162-163.

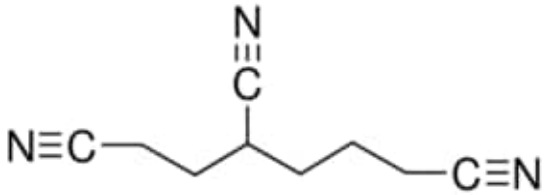


***Figure 8****: Structure of 1,3,6-hexane tricarbonitrile (HTCN)*

Embodiments 25 and CC6 of Hong each satisfy Formulas (1)-(3) even if Y only includes the 1,3,6-hexanetricarbonitrile (HTCN) component. In that scenario, for Embodiment 25, Formula (1) (X+Y) = 4.5; Formula (2) (X/Y) = 8; and Formula (3) (Y/Z) = 0.031; and for Comparison Case 6, Formula (1) (X+Y) = 4.5; Formula (2) (X/Y) = 8; and Formula (3) (Y/Z) = 0.030. Ex. 1003, ¶164.

### 5. Claim 5: "The electrolyte according to claim 1, wherein the trinitrile compound is one selected from the group consisting of. . . 1,3,6-hexanetricarbonitrile. . . ."

Hong anticipates claim 5 of the '363 patent. As explained in Section VII.A.1 above, Embodiments 25 and CC6 of Hong contain 1,3,6-hexanetricarbonitrile (HTCN) and satisfy Formulas (1)-(3) even if Y only includes the 1,3,6-hexanetricarbonitrile (HTCN) component. Ex. 1005, ¶¶34-35. Ex. 1003, ¶¶165-167.

### 6. Claim 6

Hong anticipates claim 6 of the '363 patent. Ex. 1003, ¶168.

#### a. [6pre]: "The electrolyte according to claim 1,"

As explained in Section VII.A.1 above, Hong discloses electrolytes according to claim 1, including Embodiments 2, 18, 25, and CC6. Ex. 1003, ¶¶168-169.

#### b. [6.a]: "wherein X is about 0.01-10 wt %,"

Hong further discloses electrolytes "wherein X is about 0.01-10 wt %." Embodiments 2, 18, 25, and CC6 contain 4 wt % of dinitrile compounds (i.e., X = 4 wt %). Ex. 1005, ¶¶34-35. Ex. 1003, ¶170; *see also* § VII.A.1.b, *supra*.

#### c. [6.b]: "Y is about 0.01-10 wt %,"

Hong further discloses electrolytes wherein "Y is about 0.01-10 wt %." Embodiment 2 contains 0.8 wt % of the trinitrile Compound $I_1$ (i.e., Y = 0.8 wt %). Ex. 1005, ¶34. Embodiment 18 contains 5 wt % of the trinitrile Compound $I_1$ (i.e., Y = 5 wt %). Ex. 1005, ¶35. Embodiment 25 contains 2.0 total wt % of trinitrile compounds (i.e., Y = 2.0 wt %), 1.5 wt % of the trinitrile Compound $II_6$ and 0.5 wt

% of the trinitrile compound 1,3,6-hexanetricarbonitrile (HTCN). Ex. 1005, ¶35. Comparison Case 6 contains 0.5 wt % of the trinitrile compound 1,3,6-hexanetricarbonitrile (HTCN) (i.e., Y = 0.5 wt %). Ex. 1005, ¶35. *See* § VII.A.1.c, *supra*. Ex. 1003, ¶171.

#### d. [6.c]: "and a weight percentage Z of the propyl propionate is about 5-50 wt %."

Hong further discloses electrolytes wherein "a weight percentage Z of the propyl propionate is about 5-50 wt %." As explained in Section VII.A.1.g, propyl propionate accounts for 18.4 wt % of the total electrolyte in Embodiment 2, 17.3 wt % of the total electrolyte in Embodiment 18, 16.1 wt % of the total electrolyte in Embodiment 25, and 16.5 wt % of the total electrolyte in Comparison Case 6. Ex. 1003, ¶172.

Even if the assumptions underlying the calculation of those values are set aside, each of Embodiments 2, 18, 25, and CC6 contains a weight percentage of propyl propionate between about 5-50%. If one or more of the assumptions were set aside, propyl propionate could account for no more than 25 wt % and no less than 15.1-18.1 wt % of the total electrolyte, as explained in Section VII.A.1.g, VII.A.1. Ex. 1003, ¶¶173-175.

### 7. Claim 11: "The electrolyte according to claim 1, further comprising one selected from a group consisting of: a cyclic carbonate ester having a carbon-carbon double bond, a fluorinated chain carbonate ester, a fluorinated cyclic

**carbonate ester, a compound having a sulfur-oxygen double bond, and any combination thereof."**

Hong anticipates claim 11. In particular, Embodiments 2, 18, 25, and CC6 contain one or more of a cyclic carbonate ester having a carbon-carbon double bond, a fluorinated cyclic carbonate ester, and a compound having a sulfur-oxygen double bond. Ex. 1003, ¶¶176-177.

Embodiments 2, 18, 25, and CC6 all contain fluoroethylene carbonate (FEC) and 1,3-propane sultone (PS). Ex. 1005, ¶¶34-35. Fluoroethylene carbonate (FEC) is a fluorinated ethylene carbonate, as shown in Figure 9 below. 1,3-propane sultone (PS) is a compound having a sulfur-oxygen double-bond, as shown in Figure 10 below. Ex. 1003, ¶178.

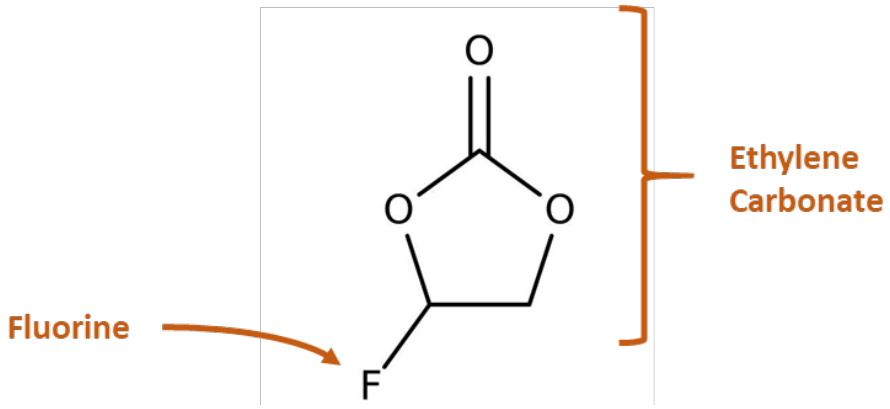


***Figure 9**: Structure of Fluoroethylene Carbonate (FEC)*

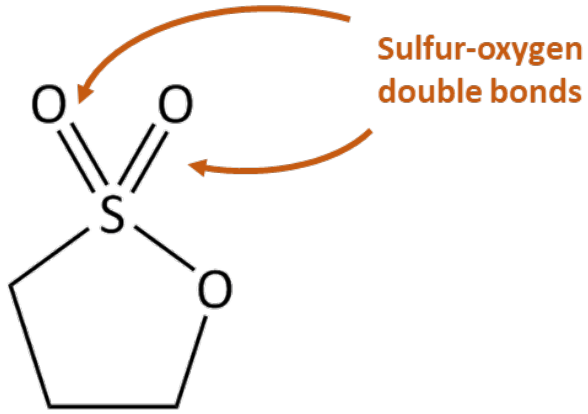


***Figure 10***: *Structure of 1,3-Propane Sultone (PS)*

Embodiments 2 and 18 contain vinylethylene carbonate (VEC), in addition to FEC and PS. Ex. 1005, ¶¶34-35. Vinylethylene carbonate is a cyclic carbonate ester having a carbon-carbon double bond, as shown in Figure 11 below. Ex. 1003, ¶179.

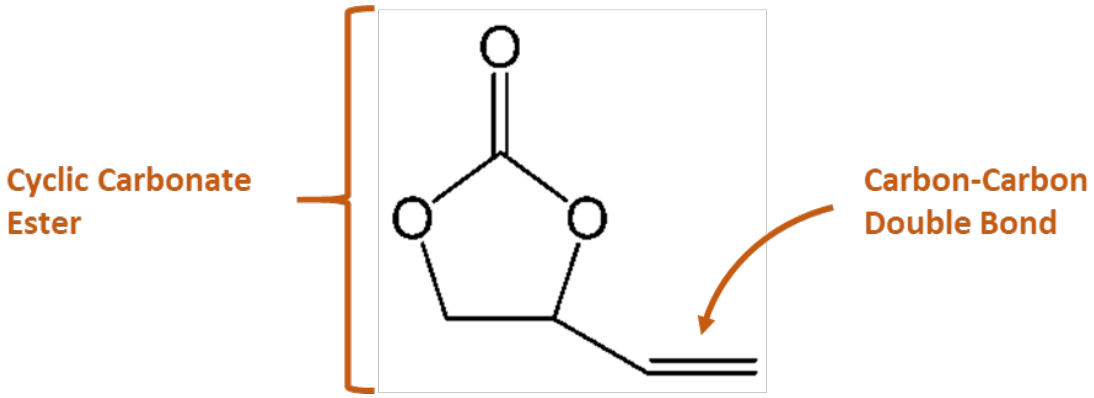


***Figure 11***: *Structure of Vinylethylene Carbonate (VEC)*

Embodiments 25 and CC6 contain ethylene sulfate (DTD), in addition to FEC and PS. Ex. 1005, ¶35. Ethylene sulfate is a compound having a sulfur-oxygen double bond, as shown in Figure 12 below. Ex. 1003, ¶180.

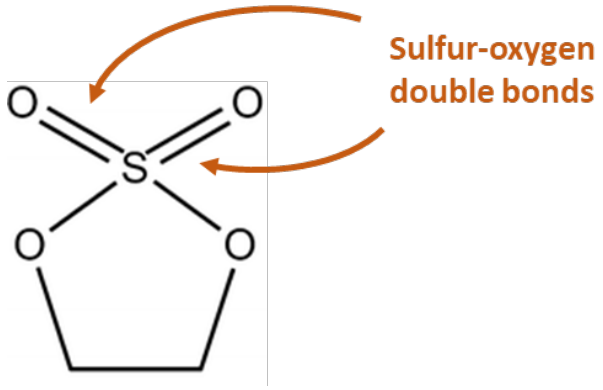


***Figure 12**: Structure of Ethylene Sulfate (DTD)*

**8. Claim 13**

Hong anticipates claim 13 of the ’363 patent. Ex. 1003, ¶181.

**a. [13pre]: “An electrochemical device, wherein the electrochemical device comprises”**

To the extent the preamble is limiting, Hong discloses an electrochemical device. Embodiments 2, 18, 25, and CC6 describe example embodiments of a “lithium secondary battery” containing the described electrolyte. Ex. 1005, ¶¶25, 34-35. A person of ordinary skill in the art would understand that a lithium secondary battery is an electrochemical device. *See* Ex. 1001, 18:19-25 (“The electrochemical device of the present invention includes any device in which an electrochemical reaction takes place. . . . In particular, the electrochemical device is a *lithium secondary battery*. . . .”) (emphasis added). Ex. 1003, ¶182.

**b. [13.a]: “electrodes and”**

Hong discloses an electrochemical device comprising electrodes. Embodiments 2, 18, 25, and CC6 describe example embodiments of a lithium

secondary battery comprising electrodes. *See* Ex. 1005, ¶27 ("Positive electrode preparation"), ¶28 ("Negative electrode preparation"), ¶29 ("Lithium secondary battery preparation: making the positive electrode, the negative electrode, and the separator prepared above into a cell; injecting the electrolyte obtained in Step (1); and performing formation and other processes to complete a lithium secondary battery."). Ex. 1003, ¶183.

**c. [13.b]-[13.g]: "an electrolyte comprising a dinitrile compound, a trinitrile compound, and propyl propionate, wherein, based on a total weight of the electrolyte, a weight percentage of the dinitrile compound is X and a weight percentage of the trinitrile compound is Y, where X and Y meet conditions represented by Formula (1) and Formula (2): about 2 wt % ≤ (X+Y) ≤ about 11 wt % (1); and about 0.1 ≤ (X/Y) ≤ about 8 (2)."**

As explained in Sections VII.A.1.a-VII.A.1.f above, the electrolytes in Embodiments 2, 18, 25, and CC6 comprise a dinitrile compound, a trinitrile compound, and propyl propionate and satisfy Formulas (1) and (2). Ex. 1003, ¶¶184-207.

**9. Claim 16**

Hong anticipates claim 16 of the '363 patent. Ex. 1003, ¶181.

**a. [16pre]: "An electronic device, comprising"**

To the extent the preamble is limiting, Hong discloses an electronic device. Embodiments 2, 18, 25, and CC6 describe example embodiments of a lithium secondary battery on which charge-discharge tests were performed, including a high-

temperature cycle test and a high-temperature storage performance test. Ex. 1005, ¶31. Both tests would have involved charging and discharging the battery by connecting it to an electronic device. Ex. 1003, ¶¶208-209.

**b. [16.a]-[16.h]: "an electrochemical device that includes electrodes and an electrolyte comprising a dinitrile compound, a trinitrile compound, and propyl propionate, wherein, based on a total weight of the electrolyte, a weight percentage of the dinitrile compound is X and a weight percentage of the trinitrile compound is Y, where X and Y meet conditions represented by Formula (1) and Formula (2): about 2 wt % ≤ (X+Y) ≤ about 11 wt % (1); and about 0.1 ≤ (X/Y) ≤ about 8 (2)."**

As explained in Section VII.A.8 above, Embodiments 2, 18, 25, and CC6 disclose electrochemical devices that include electrodes and an electrolyte comprising a dinitrile compound, a trinitrile compound, and propyl propionate in amounts that satisfy Formulas (1) and (2). Ex. 1003, ¶¶210-238.

## B. Ground 2: Claims 7-9 Are Obvious over Hong and Zhuang

### 1. Motivation to Combine Hong and Zhuang

A person of ordinary skill in the art would have been motivated with a reasonable expectation of success to modify the electrolyte of Hong to incorporate a fluoroether of Zhuang. Ex. 1003, ¶¶239-240.

Hong discloses electrolytes, including exemplary Embodiments 2, 18, and 25, that contain the carboxylate compound propyl propionate (PP), as well as DENE, which is a dinitrile compound comprising an ether bond. Ex. 1005, ¶¶34-35. Hong

aims to improve the high-temperature performance of the battery. Ex. 1005, ¶¶18, 31, 41-42. Ex. 1003, ¶241.

Zhuang discloses that the combination of a fluoroether compound, a carboxylate compound such as propyl propionate (PP), and a dinitrile compound comprising an ether bond such as DENE can achieve synergistic benefits, including an improvement in high-temperature battery performance. In particular, Zhuang states "the electrolyte comprising carboxylate compounds, fluoroether compounds and dinitrile compounds comprising ether bonds, after being applied to the lithium-ion battery, is capable of improving the high temperature storage performance, high temperature cycle life performance and rate performance of the lithium-ion battery." Ex. 1006, ¶5; *see also* ¶86. Ex. 1003, ¶242.

Zhuang discloses that fluoroether compounds having the structures shown in Figure 13 achieve its objectives.

$$R_6 - O - R_7;$$

$$R_8 - (R_{13} - O)_n - R_9.$$

***Figure 13****: General Structure of Preferred Fluoroethers in Zhuang*

$R_6$ and $R_7$ can be a fluoroalkyl, a fluoroalkenyl, or a fluoroaryl. Ex. 1006, ¶44. $R_8$ and $R_9$ can be an alkyl, an alkenyl, an aryl, a fluoroalkyl, a fluoroankenyl, or a fluoroaryl. Ex. 1006, ¶45. $R_{13}$ can be a fluoroalkylene, a fluoroalkenylene, or a

fluoroarylene. Ex. 1006, ¶45. n is an integer between 2-10. Ex. 1006, ¶45. Ex. 1003, ¶243.

Zhuang further discloses Compounds B1-B7, which are specific embodiments of fluoroethers according to these structures, as shown in Figure 14 below. Ex. 1006, ¶105, 72. Ex. 1003, ¶244.

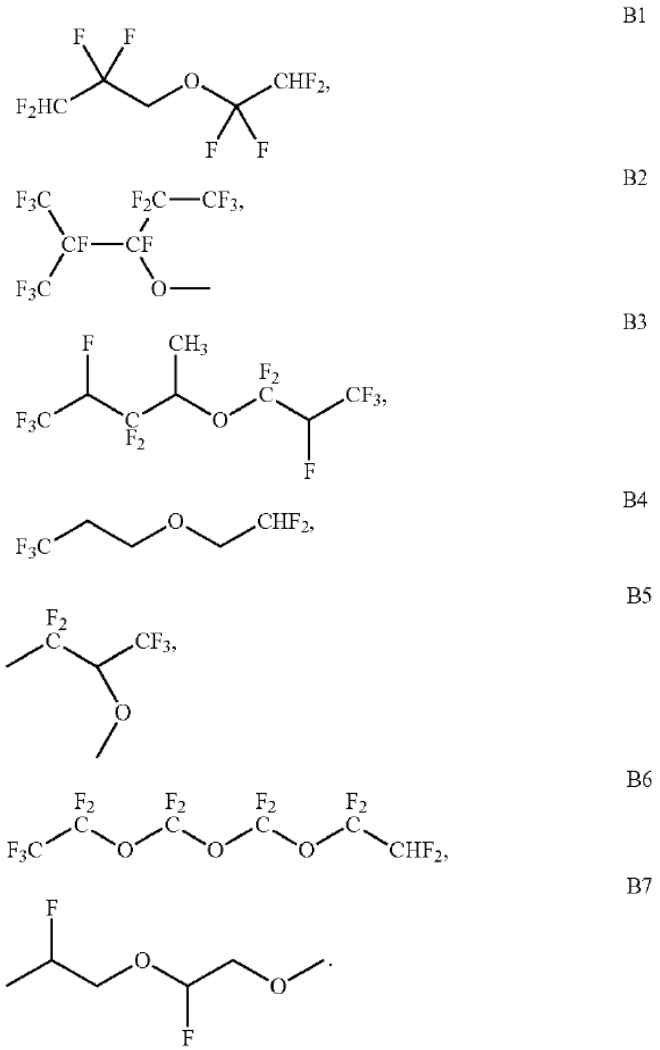


***Figure 14**: Structures of Exemplary Fluoroether Compounds B1-B7 in Zhuang*

Zhuang demonstrates the efficacy of Compounds B1-B7 in its examples. In particular, Zhuang discloses that electrolytes comprising a carboxylate compound, one or more of Compounds B1-B7, and a dinitrile compound comprising an ether bond demonstrated improved properties relative to electrolytes lacking at least one of those three components. Ex. 1006, ¶¶126-129. These improved properties included faster anode wetting time; reduced battery thickness expansion at high temperatures; improved battery capacity retention at high temperatures; reduced DC internal resistance; and improved discharge capacity retention rate for both regular- and irregular-shaped batteries. Ex. 1006, ¶¶143 (wetting time), 144-145 (thickness expansion rate and capacity retention rate at high temperature), 146 (DC internal resistance and capacity retention rate). These are standard measures of battery performance that a person of ordinary skill in the art would have been motivated to improve. Indeed, Hong explicitly aims to reduce battery thickness expansion at high temperatures and improve battery capacity retention at high temperatures. *See* Ex. 1005, ¶43 ("[A] tricyanophosphite compound or a tricyanophosphate compound can effectively improve the battery's cycling performance, *significantly increase the battery's capacity retention rate after storage at a high temperature, suppress thickness expansion*, and mitigate lithium precipitation during low-temperature charging.") (emphasis added); *see also* ¶¶30-31, 39-42. Ex. 1003, ¶245; *see also* ¶¶253-265.

A person of ordinary skill in the art would have been motivated to modify the electrolyte of Hong to incorporate a fluoroether of Zhuang in order to achieve the synergistic benefits that Zhuang teaches from the combination of a fluoroether compound, a carboxylate compound, and a dinitrile compound comprising an ether bond. Moreover, a person of ordinary skill in the art would have had a reasonable expectation of success in modifying the electrolyte of Hong to incorporate a fluoroether of Zhuang. Ex. 1003, ¶246.

Zhuang explains that the combination of carboxylate compounds, fluoroether compounds, and dinitrile compounds comprising ether bonds enables the beneficial properties of the electrolyte. Ex. 1006, ¶5. Embodiments 2, 18, and 25 of Hong comprise the carboxylate compound propyl propionate and the dinitrile compound comprising an ether bond DENE. Ex. 1005, ¶¶34-35. Zhuang discloses that the electrolyte may contain propyl propionate as the carboxylate compound and Compound C1 as the dinitrile compound comprising an ether bond. Ex. 1006, ¶¶40, 106. The structure of Compound C1 closely resembles that of DENE, as shown in Figure 15 below. Ex. 1003, ¶247.

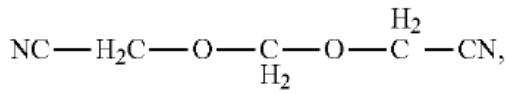

C1

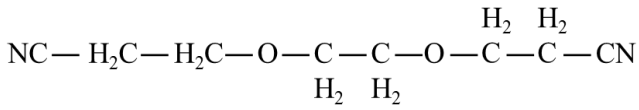

DENE

***Figure 15**: Structures of Compound C1 and DENE*

Compound C1 contains one extra $CH_2$ between each cyano group and the oxygen atom closest to it, as well as between the oxygen atoms. In the examples, Zhuang uses Compound C1 as the dinitrile compound comprising an ether bond in the majority of the exemplary electrolytes. Ex. 1006, ¶126. Ex. 1003, ¶248.

Zhuang and Hong overlap with respect to other components of the lithium-ion battery as well. Zhuang discloses that the electrolyte may contain one or more of fluoroethylene carbonate (FEC) and vinyl ethylene carbonate (VEC). Ex. 1006, ¶¶87, 107. Embodiments 2, 18, and 25 of Hong contain fluoroethylene carbonate. Ex. 1005, ¶¶34-35. Embodiments 2 and 18 of Hong also contain vinyl ethylene carbonate. Ex. 1005, ¶¶34-35. Zhuang further discloses that the electrolyte may contain $LiPF_6$ as the lithium salt. Ex. 1006, ¶¶93, 108, 110. Embodiments 2, 18, and 25 of Hong contain $LiPF_6$ as a lithium salt. Ex. 1005, ¶¶34-35. Ex. 1003, ¶¶249-250.

Moreover, Hong discloses a method of preparing an electrolyte. Ex. 1005, ¶26. A person of ordinary skill in the art would have understood how to modify Hong's electrolyte preparation method to produce an electrolyte further comprising

a fluoroether of Zhuang. Further, claims 7-9 of the '363 patent do not have an efficacy requirement, and it is rare that an additive would eliminate the functionality of a given electrolyte. A person of ordinary skill in the art therefore would have had a reasonable expectation of success in producing a functional electrolyte by modifying the electrolyte disclosed in Hong to incorporate a fluoroether of Zhuang. Ex. 1003, ¶251.

### 2. Claim 7: "The electrolyte according to claim 1, further comprising a fluoroether comprising at least one of the compounds of Formula (8), Formula (9), Formula (10) or Formula (11). . ."

The combination of Hong and Zhuang renders obvious claim 7. Claim 7 of the '363 patent recites:

> The electrolyte according to claim 1, further comprising a fluoroether comprising at least one of the compounds of Formula (8), Formula (9), Formula (10) or Formula (11):
>
> Rf1-O-Rf2 (8);
>
> Rf1-O—R (9);
>
> Rf1-O—(R′—O)$_n$-Rf2 (10); and
>
> Rf1-O—(R′—O)$_n$—R (11),
>
> wherein Formulae (8), (9), (10), and (11), Rf1 and Rf2 are each independently a linear or branched C1 to C12 fluoroalkyl group having at least one hydrogen atom

> substituted with fluoro, R is a linear or branched C1 to C12 alkyl group, and R′ is a linear or branched C1 to C5 alkylene group, and n is an integer from 1 to 5."

Ex. 1001, claim 7. Ex. 1003, ¶¶265-266.

Zhuang discloses electrolytes of Formulas (8)-(11). Zhuang discloses Compounds B1-B7 as specific fluoroethers for use in the recited electrolyte. Ex. 1006, ¶¶105, 72. Zhuang demonstrates the efficacy of these fluoroethers in the examples. Ex. 1006, ¶¶143-148. Ex. 1003, ¶267.

Compounds B1, B3, and B4 are compounds of Formula (8), as shown in Figure 16 below. For Compound B1, Rf1 is the linear C3 fluoroalkyl group $HCF_2CF_2CH_2$— and Rf2 is the linear C2 fluoroalkyl group $HCF_2CF_2$—. For Compound B3, Rf1 is the branched C5 fluoroalkyl group $CF_3CHFCF_2(CH_3)CH$— and Rf2 is the linear C3 fluoroalkyl group $CF_3CFHCF_2$—. For Compound B4, Rf1 is the linear C3 fluoroalkyl group $CF_3CH_2CH_2$— and Rf2 is the linear C2 fluoroalkyl group $HCF_2CH_2$—. Ex. 1003, ¶268.

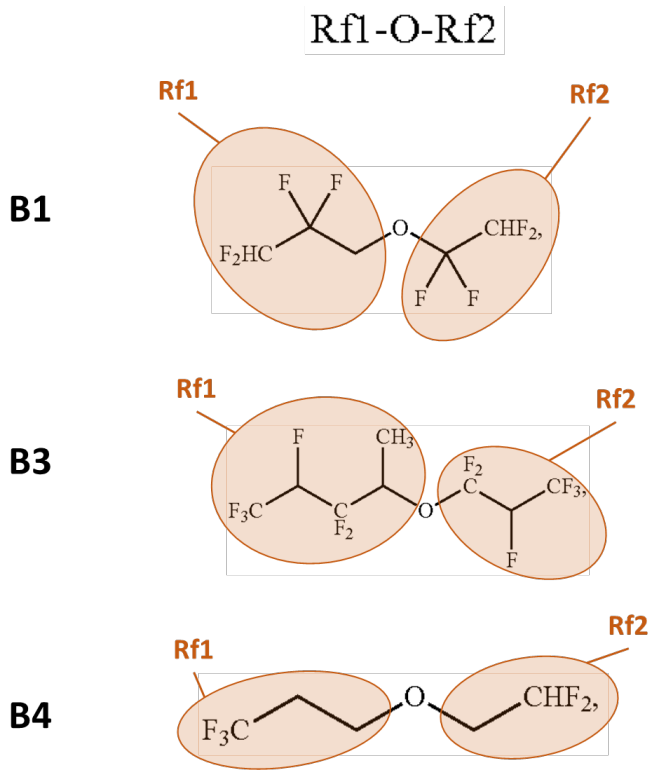


***Figure 16**: Compounds B1, B3, and B4 Satisfy Formula (8)*

Compounds B2 and B5 are compounds of Formula (9), as shown in Figure 17 below. For Compound B2, Rf1 is the branched C6 fluoroalkyl $(CF_3)_2CF(CF_3CF_2)CF$— and R is the linear C1 alkyl group $CH_3$—. For Compound B5, Rf1 is the branched C4 fluoroalkyl group $CH_3CF_2(CF_3)CH$— and R is the linear C1 alkyl group $CH_3$—. Ex. 1003, ¶269.

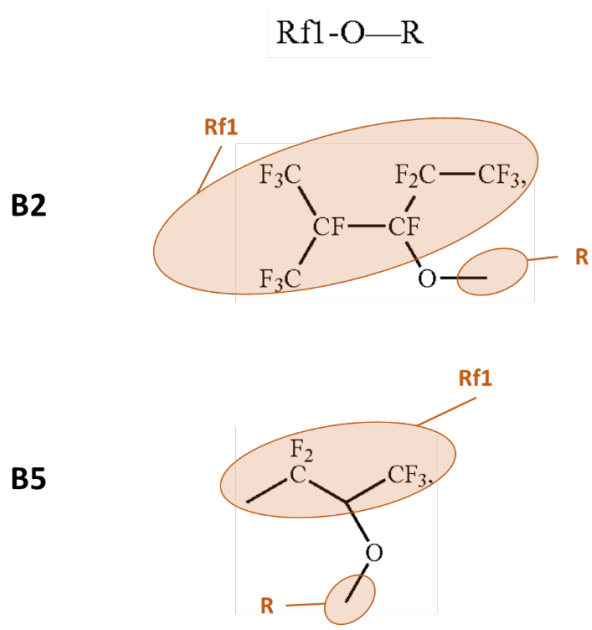


***Figure 17**: Compounds B2 and B5 Satisfy Formula (9)*

Compound B6 is a compound of Formula (10), as shown in Figure 18 below. For Compound B6, Rf1 is the linear C2 fluoroalkyl group $CF_3CF_2$—, R' is the linear C1 fluoroalkyl group $CF_2$—, n equals 2, and Rf2 is the linear C2 fluoroalkyl group $HCF_2CF_2$—. Ex. 1003, ¶270.

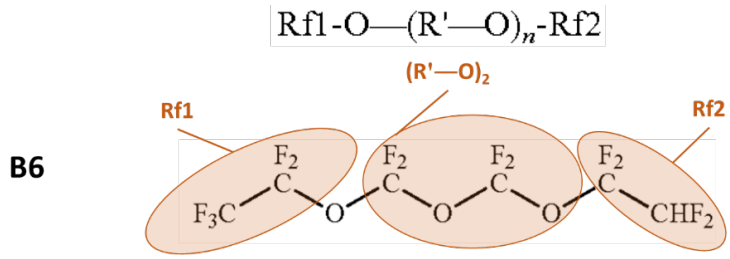


***Figure 18:** Compound B6 Satisfies Formula (10)*

Compound B7 is a compound of Formula (11), as shown in Figure 19 below. For Compound B7, Rf1 is the linear C3 fluoroalkyl group $CH_3CHFCH_2$—, R' is the

linear C2 fluoroalkyl group $CHFCH_2$—, n equals 1, and Rf2 is the linear C1 alkyl group $CH_3$—. Ex. 1003, ¶271.

$$Rf1\text{-}O\text{—}(R'\text{—}O)_n\text{—}R$$

B7

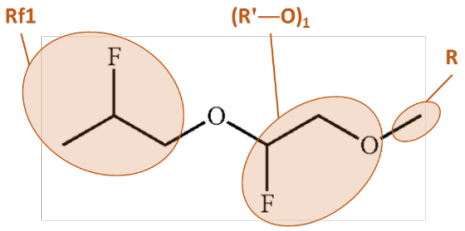


***Figure 19:*** *Compound B7 Satisfies Formula (11)*

As explained in Section VII.B.1 above, a person of ordinary skill in the art would have been motivated with a reasonable expectation of success to incorporate a fluoroether of Zhuang, such as one or more of Compounds B1-B7, into the electrolyte of Hong. Ex. 1003, ¶272.

### 3. Claim 8: "The electrolyte according to claim 7, wherein Rf1 or Rf2 is each independently a fluoroalkyl group selected from the group consisting of. . . $HCF_2CF_2$—. . . $CF_3CF_2$ . . . $HCF_2CF_2CH_2$—. . . ."

The combination of Hong and Zhuang renders obvious claim 8. In particular, Zhuang discloses Compounds B1 and B6, which meet the limitation of Claim 8 of the '363 patent, as specific fluoroethers for use in the disclosed electrolyte. Ex. 1006, ¶¶105, 72. Zhuang demonstrates the efficacy of these fluoroethers in the examples. Ex. 1006, ¶¶143-148. Ex. 1003, ¶¶273-274.

Compound B1 is a fluoroether of Formula (8), wherein Rf1 is the fluoroalkyl group $HCF_2CF_2CH_2$— and Rf2 is the fluoroalkyl group $HCF_2CF_2$—, as shown in Figure 20 below. Ex. 1003, ¶275.

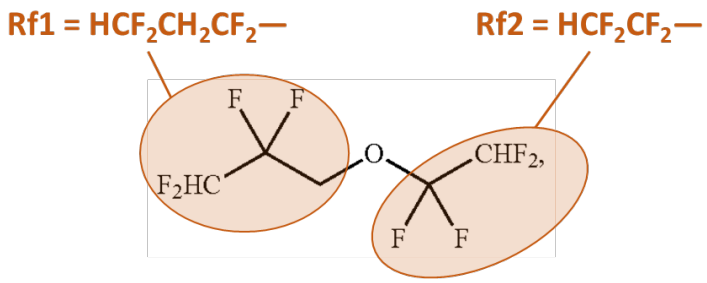


***Figure 20****: Compound B1 Contains Fluoroalkyl Groups Recited in Claim 8*

Compound B6 is a fluoroether of Formula (10), wherein Rf1 is the fluoroalkyl group $CF_3CF_2$— and Rf2 is the fluoroalkyl group $HCF_2CF_2$—, as shown in Figure 21 below. Ex. 1003, ¶276.

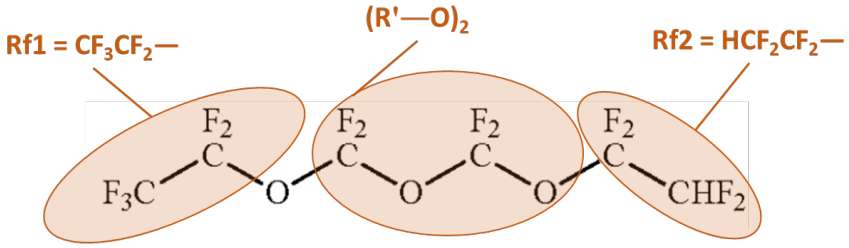


***Figure 21****: Compound B6 Contains Fluoroalkyl Groups Recited in Claim 8*

As explained in Section VII.B.1 above, a person of ordinary skill in the art would have been motivated with a reasonable expectation of success to incorporate a fluoroether of Zhuang, such as Compound B1, into the electrolyte of Hong. Ex. 1003, ¶277.

### 4. Claim 9: "The electrolyte according to claim 7, wherein the fluoroether is one selected from the group consisting of

**$HCF_2CF_2CH_2OCF_2CF_2H$, $(CF_3)_2CFCF(CF_2CF_3)(OCH_3)$, $CF_3CHFCF_2CH(CH_3)OCF_2CHFCF_3$. . . and any combination thereof."**

The combination of Hong and Zhuang renders obvious claim 9. In particular, Zhuang discloses compounds B1, B2, and B3, which meet the limitation of Claim 9 of the '363 patent, as specific examples of fluoroether compounds for use in the recited electrolyte. Ex. 1006, ¶¶105, 72. Zhuang demonstrates the efficacy of these fluoroethers in the examples. Ex. 1006, ¶¶143-148. Ex. 1003, ¶¶278-279.

Compound B1 is a fluoroether of formula $HCF_2CF_2CH_2OCF_2CF_2H$. Compound B2 is a fluoroether of formula $(CF_3)_2CFCF(CF_2CF_3)(OCH_3)$. Compound B3 is a fluoroether of formula $CF_3CHFCF_2CH(CH_3)OCF_2CHFCF_3$. Ex. 1003, ¶280.

As explained in Section VII.B.1 above, a person of ordinary skill in the art would have been motivated with a reasonable expectation of success to incorporate a fluoroether of Zhuang, such as one or more of Compounds B1, B2, and B3, into the electrolyte of Hong. Ex. 1003, ¶281.

### C. Ground 3: Claim 10 Is Obvious over Hong and Kim '685

#### 1. Motivation to Combine Hong and Kim '685

The combination of Hong and Kim '685 renders obvious claim 10. A person of ordinary skill in the art would have been motivated with a reasonable expectation of success to modify the electrolyte of Hong to incorporate a cyclic phosphonic anhydride disclosed in Kim '685. Ex. 1003, ¶¶282-284.

Hong discloses electrolytes, including exemplary Embodiments 2, 18, and 25, that contain the carbonate-based organic solvents ethylene carbonate (EC), diethyl carbonate (DEC), and propylene carbonate (PC). Ex. 1005, ¶¶34-35. Hong further discloses that lithium-ion batteries incorporating these electrolytes experienced battery expansion. Ex. 1005, ¶¶41, 31. For example, Embodiments 2, 18, and 25 experienced battery expansion during both the high-temperature cycle test and the high-temperature storage performance test. Ex. 1005, ¶¶41, 31. Ex. 1003, ¶284.

Kim ’685 discloses that the decomposition of carbonate-based organic solvents such as ethylene carbonate and diethyl carbonate can cause gassing that leads to battery expansion. Ex. 1007, 2:10-3:10. Kim ’685 further discloses that this gassing is a particular concern when the battery is stored at high temperature after charging. Ex. 1007, 3:14-20. Ex. 1003, ¶285.

To inhibit gassing from the decomposition of carbonate-based organic solvents, Kim ’685 discloses the incorporation of cyclic phosphonic anhydrides into the electrolyte. Ex. 1007, 3:14-20. In particular, Kim ’685 discloses a type of cyclic phosphonic anhydride called a 1-alkylphosphonic acid cyclic anhydride. Ex. 1003, ¶286.

[Formula I]

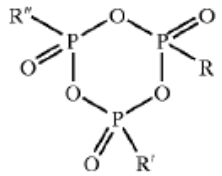

where R, R', and R" are alkyl groups having 1 to 4 carbon atoms.

***Figure 22**: Structure of 1-Alkylphosphonic Acid Cyclic Anhydride in Kim '685*

Kim '685 states "[t]he 1-alkylphosphonic acid cyclic anhydride inhibits the decomposition of an organic solvent, thereby preventing an increase in the thickness of the battery when the battery is stored at a high temperature after charging." Ex. 1007, 4:21-24. Ex. 1003, ¶287.

In the examples, Kim '685 discloses electrolytes containing the organic solvent ethylene carbonate and between 0.5-5.0 wt % of 1-propanephosphonic acid cyclic anhydride ("T3P"). Ex. 1007, 4:65-5:17. In each instance and at each time point, the examples containing 0.5-5.0 wt % of 1-propanephosphonic acid cyclic anhydride experienced a lower degree of battery expansion and better retained their discharge capacity than a corresponding electrolyte that did not contain 1-propanephosphonic acid cyclic anhydride. Ex. 1007, 5:55-65. The examples containing between 0.5-5.0 wt % of 1-propanephosphonic acid cyclic anhydride also better maintained their discharge capacity. Ex. 1007, 6:15-28. Ex. 1003, ¶¶288-290.

A person of ordinary skill in the art would have understood that a new additive can supplement the benefits of the additives already present in the electrolyte. Thus,

although the expansion for the batteries tested in Kim ’685 exceeded the expansion measured in Hong, a person of ordinary skill in the art would have understood that the cyclic phosphonic anhydride of Kim ’685 could further reduce the expansion of the battery in Hong. A person of ordinary skill in the art would have been motivated by the disclosure in Kim ’685 that cyclic phosphonic anhydrides mitigated the gassing problem from the decomposition of carbonate solvents—solvents that were also present in the electrolyte of Hong. Ex. 1003, ¶291.

A person of ordinary skill in the art would have had a reasonable expectation of success in modifying the electrolyte of Hong to incorporate a cyclic phosphonic anhydride of Kim ’685. Ex. 1003, ¶292.

As an initial matter, Hong and Kim ’685 overlap with respect to the non-additive components of the lithium-ion battery. For example, Kim ’685 states that “[a]n organic solvent such as a cyclic or chained carbonate, or a mixture of two or more solvents can be used as a non-aqueous organic solvent in the present invention.” Ex. 1007, 4:25-27. Kim ’685 specifically identifies ethylene carbonate and diethyl carbonate as organic solvents considered by the invention, and discloses results from testing electrolytes comprising ethylene carbonate in the examples. Ex. 1007, 4:25-30, 4:66-5:10. Embodiments 2, 18, and 25 of Hong contain the cyclic carbonate compounds ethylene carbonate and propylene carbonate and the chain carbonate compound diethyl carbonate as organic solvents. Ex. 1005, ¶¶34-35. Kim

’685 and Hong further disclose example embodiments that rely upon the same lithium salt ($LiPF_6$). Ex. 1007, 4:66-5:10; Ex. 1005, ¶¶34-35. Ex. 1003, ¶293.

Moreover, Hong discloses a method of preparing an electrolyte. Ex. 1005, ¶26. A person of ordinary skill in the art would have understood how to modify Hong’s electrolyte preparation method to produce an electrolyte further comprising a cyclic phosphonic anhydride of Kim ’685. Further, claim 10 does not have an efficacy requirement, and it is rare that an additive would eliminate the functionality of a given electrolyte. A person of ordinary skill in the art therefore would have had a reasonable expectation of success in producing a functional electrolyte in modifying the electrolyte disclosed in Hong to incorporate a cyclic phosphonic anhydride of Kim ’685. Ex. 1003, ¶294.

#### 2. [10pre]: “The electrolyte according to claim 1, further comprising”

As explained in Section VII.A.1 above, Hong discloses an electrolyte according to claim 1. The electrolyte of Hong modified to incorporate a cyclic phosphonic anhydride of Kim ’685 similarly discloses an electrolyte according to claim 1. Ex. 1003, ¶295.

#### 3. [10.a]: “a cyclic phosphonic anhydride”

The electrolyte of Hong as modified by Kim ’685 discloses a cyclic phosphonic anhydride. Kim ’685 discloses a type of cyclic phosphonic anhydride

called a 1-alkylphosphonic acid cyclic anhydride that has the structure shown in Figure 23 below. Ex. 1003, ¶296.

[Formula I]

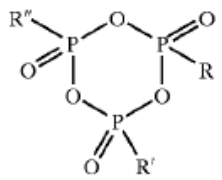

where R, R', and R" are alkyl groups having 1 to 4 carbon atoms.

***Figure 23****: Structure of 1-Alkylphosphonic Acid Cyclic Anhydride in Kim '685*

The '363 patent describes cyclic phosphonic anhydrides having a structure that encompasses the 1-alkylphosphonic acid cyclic anhydrides of Kim '685. As shown in Figure 24 below, the '363 patent describes cyclic phosphonic anhydrides that have the same basic structure as Kim '685. Ex. 1003, ¶297.

[12]

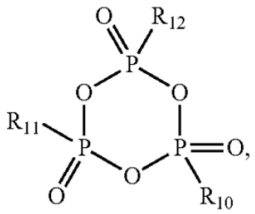

wherein in Formula [12], $R_{10}$, $R_{11}$, and $R_{12}$ each independently may be hydrogen; each independently may be an alkyl group having 1-20 carbon atoms, for example, an alkyl

***Figure 24:*** *Structure of Exemplary Phosphonic Cyclic Anhydride in the '363 Patent*

As explained in Section VII.C.1 above, a person of ordinary skill in the art would have been motivated with a reasonable expectation of success to modify the

electrolyte of Hong to incorporate the cyclic phosphonic anhydride of Kim ’685. Ex. 1003, ¶298.

#### 4. [10.b]: “based on the total weight of the electrolyte, a content of cyclic phosphonic anhydride is about 0.01-10 wt%.”

The electrolyte of Hong as modified by Kim ’685 would contain cyclic phosphonic anhydride in an amount between about 0.01-10 wt % of the total electrolyte. Ex. 1003, ¶299.

Kim ’685 states that “1-alkylphosphonic acid cyclic anhydride is added to a non-aqueous organic solvent in an amount of 0.1 to 10 weight %.” Ex. 1007, 4:11-14. Kim ’685 provides a rationale for keeping the amount of 1-alkylphosphonic acid cyclic anhydride within this range. Specifically, when the weight percentage of 1-alkylphosphonic acid cyclic anhydride is below 0.1 wt %, gassing inhibition is “not likely,” but above 10 wt %, the 1-alkylphosphonic acid cyclic anhydride leads to decreased initial charge and discharge efficiencies and reduced cycle life performance of the battery. Ex. 1007, 4:14-20. Ex. 1003, ¶300.

The electrolyte of Hong as modified in view of Kim ’685 would still satisfy the ranges recited in Formulas (1)-(3) of claim 1 when accounting for the added 1-alkylphosphonic acid cyclic anhydride. When incorporating a new additive, a person of ordinary skill in the art would have either reduced the proportion of the base solvent or reduced the proportion of all electrolyte components by the same percentage. Under either choice, the electrolytes recited in Embodiments 2, 18, and

25 of Hong would still satisfy Formulas (1) and (2). If the proportion of dinitrile and trinitrile compounds remained the same, as under the first choice, Embodiments 2, 18, and 25 of Hong would satisfy Formulas (1) and (2) for the reasons discussed in Sections VII.A.1.e and VII.A.1.f above. If the proportion of dinitrile and trinitrile compounds was reduced, as under the second choice, they would reduce by at most one-tenth. Because the minimum value for X + Y in Embodiments 2, 18, and 25 is 4.8, a one-tenth reduction in that value would still satisfy Formula (1). For Formula (2), because the dinitrile (X) and trinitrile (Y) weight percentages would both be reduced by an equal ratio, the values for X/Y would be unchanged (e.g., ${}^{0.9X}/_{0.9Y} = {}^{X}/_{Y}$). Ex. 1003, ¶301.

Under either choice, the electrolytes recited in Embodiments 2, 18, and 25 of Hong would also still satisfy Formula (3) when accounting for the added 1-alkylphosphonic acid cyclic anhydride. For similar reasons as discussed for Formula (2), if the weight proportion of all electrolyte components was reduced equally when adding the 1-alkylphosphonic acid cyclic anhydride, the trinitrile (Y) and propyl propionate (Z) components would both be reduced by an equal ratio, so the values for Y/Z would be unchanged (e.g., ${}^{0.9Y}/_{0.9Z} = {}^{Y}/_{Z}$). Ex. 1003, ¶302.

If just the proportion of the base solvent was reduced, Embodiments 2 and 25 would satisfy Formula (3) even if the electrolyte contained 10 wt % of the 1-alkylphosphonic acid cyclic anhydride. For Embodiment 2, the weight percentage

of propyl propionate would be 15.9 wt % (i.e., Z = 15.9 wt %). Thus, Y/Z = 0.8/15.9 = 0.05. For Embodiment 25, the weight percentage of propyl propionate would be 13.6 wt % (i.e., Z = 13.6 wt %). Thus, Y/Z = 2/13.6 = 0.15. Accordingly, Embodiments 2 and 25 would satisfy Formula (3) if the electrolyte contained 10 wt % of the 1-alkylphosphonic cyclic anhydride. Ex. 1003, ¶¶303-304.

Embodiment 18 would satisfy Formula (3) as long as the electrolyte contained about 3 wt % or less of the 1-alkylphosphonic acid cyclic anhydride. These amounts fall within the range considered by Kim '685. Ex. 1007, 4:11-14 ("1-alkylphosphonic acid cyclic anhydride is added to a non-aqueous organic solvent in an amount of 0.1 to 10 weight %"). In the examples, Kim '685 discloses that exemplary electrolytes containing 0.5, 1.0, and 2.0 wt % of 1-propanephosphonic acid cyclic anhydride each resulted in a lower rate of battery thickness expansion at all tested time points and a higher maintenance ratio of discharge capacity relative to a comparative electrolyte that contained 1-propanephosphonic acid cyclic anhydride. Ex. 1007, 5:5-6:23. For Embodiment 18, the weight percentage of propyl propionate would be 16.5 wt % (i.e., Z = 16.5 wt %). Thus, Y/Z = 5/16.5 = 0.30. Accordingly, Embodiment 18 would satisfy Formula (3) if the electrolyte contained as much as 3 wt % of the 1-alkylphosphonic cyclic anhydride. Ex. 1003, ¶¶305-307.

### D. Ground 4: Claim 12 Is Obvious over Hong and Kim ’934

#### 1. Motivation to Combine Hong and Kim ’934

A person of ordinary skill in the art would have been motivated with a reasonable expectation of success to modify the electrolyte of Hong to incorporate a cyclic carboxylate ester disclosed in Kim ’934. Ex. 1003, ¶¶308-309.

Hong discloses electrolytes, including exemplary Embodiment 25, that contain 1,3,6-hexane tricarbonitrile (HTCN). Ex. 1005, ¶35. Hong discloses that these electrolytes provide improved high-temperature and high-voltage performance. Ex. 1005, ¶¶2, 5. Ex. 1003, ¶310.

Kim ’934 similarly discloses electrolytes that offer improved performance at high temperature and high voltage. Ex. 1008, ¶8. In particular, Kim ’934 discloses electrolytes comprising a trinitrile compound of Chemical Formula 1 and a cyclic carboxylate ester of Chemical Formula 2, shown in Figure 25 below. Ex. 1008, ¶¶10-13. Kim ’934 discloses that the compound of Chemical Formula 1 may be 1,3,6-hexanetricarbonitrile (HTCN) and the compound of Chemical Formula 2 may be γ-butyrolactone (GBL) or γ-valeroactone. Ex. 1008, ¶¶15, 38. Ex. 1003, ¶311.

[CHEMICAL FORMULA 1]

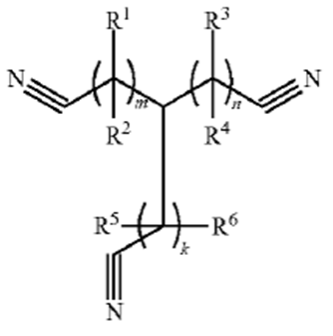


[CHEMICAL FORMULA 2]

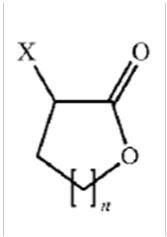


***Figure 25**: Structures of Chemical Formula 1 and Chemical Formula 2 in Kim '934*

Kim '934 explains that the combination of a trinitrile compound of Chemical Formula 1 and a cyclic carboxylate ester of Chemical Formula 2 can offer synergistic benefits to the electrolyte. Ex. 1008, ¶41. The benefits include lower gassing at high temperature or following thermal impact, better capacity retention at high temperature, and lower thickness increase at high temperature. Ex. 1008, ¶¶41, 112-140. These are standard measures of battery performance that a person of ordinary skill in the art would have been motivated to improve. Indeed, Hong explicitly aims to reduce battery thickness expansion at high temperatures and improve battery capacity retention at high temperatures. *See* Ex. 1005, ¶43 ("[A] tricyanophosphite compound or a tricyanophosphate compound can effectively improve the battery's cycling performance, *significantly increase the battery's capacity retention rate after storage at a high temperature, suppress thickness expansion*, and mitigate lithium

precipitation during low-temperature charging.") (emphasis added); *see also* ¶¶30-31, 39-42. Ex. 1003, ¶312; *see also* ¶¶317-322.

In the examples, Kim '934 discloses exemplary electrolytes containing hexane tricyanide (HTCN) and γ-butyrolactone (GBL) present in various weight percentages that achieve these synergistic benefits from the combination of that cyclic carboxylate ester with 1,3,6-hexane tricarbonitrile (HTCN). Ex. 1008, ¶¶90, 96, 98. A person of ordinary skill in the art would have been motivated by Kim '934 to modify the electrolyte of Hong to incorporate a cyclic carboxylate ester, such as γ-butyrolactone (GBL) or γ-valeroactone, in order to achieve the described synergistic benefits. Ex. 1003, ¶313.

A person of ordinary skill in the art would have had a reasonable expectation of success in modifying the electrolyte of Hong to incorporate a cyclic carboxylate ester of Kim '934. Ex. 1003, ¶320. As an initial matter, Hong states that the electrolyte may contain γ-butyrolactone (GBL). Ex. 1005, ¶13. Moreover, Hong and Kim '934 overlap substantially with respect to the components of their respective lithium-ion batteries. For example, Kim '934 states "the non-aqueous organic solvent may include a carbonate-based, ester-based, ether-based, ketone-based, alcohol-based, or aprotic solvent." Ex. 1008, ¶46. Kim '934 further states "the carbonate-based solvent. . . diethyl carbonate (DEC). . . ethylene carbonate (EC), propylene carbonate (PC). . . and the like." Ex. 1008, ¶47. Embodiment 25 of Hong

contains the carbonate-based solvents DEC, EC, and PC and the ester-based solvent propyl propionate. Ex. 1005, ¶35. Ex. 1003, ¶¶321-322. Additionally, the example electrolytes in Kim '934 and Embodiment 25 of Hong both contain lithium hexafluorophosphate ($LiPF_6$) as a lithium salt. Ex. 1008, ¶90; Ex. 1005, ¶35. Ex. 1003, ¶314.

Kim '934 further states that "the electrolyte may include at least one additive selected from fluoroethylene carbonate, vinylethylene carbonate, succinonitrile, polysulfone and a combination thereof." Ex. 1008, ¶42. Kim '934 explains that "[w]hen these additives are further included, the additives may help formation of a film on a negative electrode as well as the positive electrode and thus efficiently suppress gas generation from the positive and negative electrodes during the storage at a high temperature." Ex. 1008, ¶42. Embodiment 25 of Hong contains fluoroethylene carbonate and succinonitrile. Ex. 1005, ¶35. Ex. 1003, ¶315.

Further, Hong discloses a method of preparing an electrolyte. Ex. 1005, ¶26. A person of ordinary skill in the art would have understood how to modify Hong's electrolyte preparation method to produce an electrolyte further comprising a cyclic carboxylate ester of Kim '934. Further, claim 12 does not have an efficacy requirement, and it is rare that an additive would eliminate the functionality of a given electrolyte. A person of ordinary skill in the art therefore would have had a reasonable expectation of success in producing a functional electrolyte in modifying

the electrolyte disclosed in Hong to incorporate a cyclic carboxylate ester of Kim ’934. Ex. 1003, ¶316.

### 2. Claim 12: “The electrolyte according to claim 1, further comprising a cyclic carboxylate ester, including γ-butyrolactone or γ-valerolactone or a combination thereof.”

The combination of Hong and Kim ’934 renders obvious claim 12. In particular, the electrolyte of Hong as modified by Kim ’934 discloses a cyclic carboxylate ester. Kim ’934 discloses a cyclic carboxylate ester having a structure according to Chemical Formula 2. Ex. 1008, ¶¶30, 36. Kim ’934 further discloses that the compound of Chemical Formula 2 may be γ-butyrolactone (GBL) or γ-valerolactone or a combination thereof. Ex. 1008, ¶38. In the examples, Kim ’934 demonstrates the efficacy of electrolytes containing both γ-butyrolactone (GBL) and the trinitrile compound 1,3,6-hexanetricarbonitrile (HTCN). Ex. 1008, ¶90. Ex. 1003, ¶¶323-324.

As explained above, a person of ordinary skill in the art would have been motivated with a reasonable expectation of success to modify the electrolyte of Hong to incorporate a cyclic carbonate ester as taught by Kim ’934. In particular, a person of ordinary skill in the art would have been motivated with a reasonable expectation of success to modify the electrolyte of Hong to incorporate γ-butyrolactone (GBL). Ex. 1003, ¶325.

### E. Ground 5: Claims 14-15 Are Obvious over Fujikawa and Hong

#### 1. Motivation to Combine Fujikawa and Hong

A person of ordinary skill in the art would have been motivated with a reasonable expectation of success to modify the lithium secondary battery of Fujikawa to incorporate the electrolyte of Hong. Ex. 1003, ¶¶326-327.

Fujikawa discloses improvements to battery structure. Fujikawa aims "to achieve both excellent safety and high output power in a lithium secondary battery in which a current collecting lead is connected to a substantially center portion of an electrode." Ex. 1009, ¶6. Fujikawa thus discloses batteries comprising a heat-resistant layer between the cathode and the anode. Ex. 1009, ¶6. Ex. 1003, ¶328.

Fujikawa further discloses batteries wherein both the cathode and the anode comprise a coating comprising a single-sided coating and a double-sided coating. Ex. 1009, ¶¶66, 96-97, 89-91. In particular, Fujikawa discloses a battery wherein both the cathode and the anode comprise a single-sided coating (opposite a "center exposed portion," 12a and 22a, respectively) and a double-sided coating and a heat-resistant layer 30 is formed on the anode, as shown in Figure 26 below. Ex. 1009, ¶96 (Example 38). Ex. 1003, ¶329.

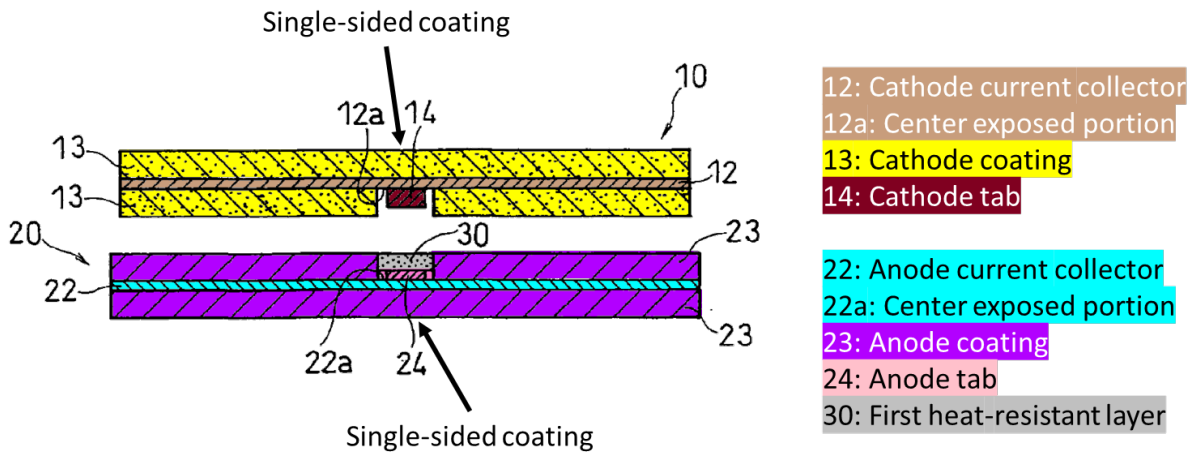


***Figure 26**: Battery of Fujikawa with One Heat-Resistant Layer on the Anode*

Fujikawa further discloses a battery wherein both the cathode and the anode comprise a single-sided coating and a double-sided coating, and a second heat-resistant layer 40 is formed on the anode, as shown in Figure 27 below. Ex. 1009, ¶97 (Example 39). Ex. 1003, ¶330.

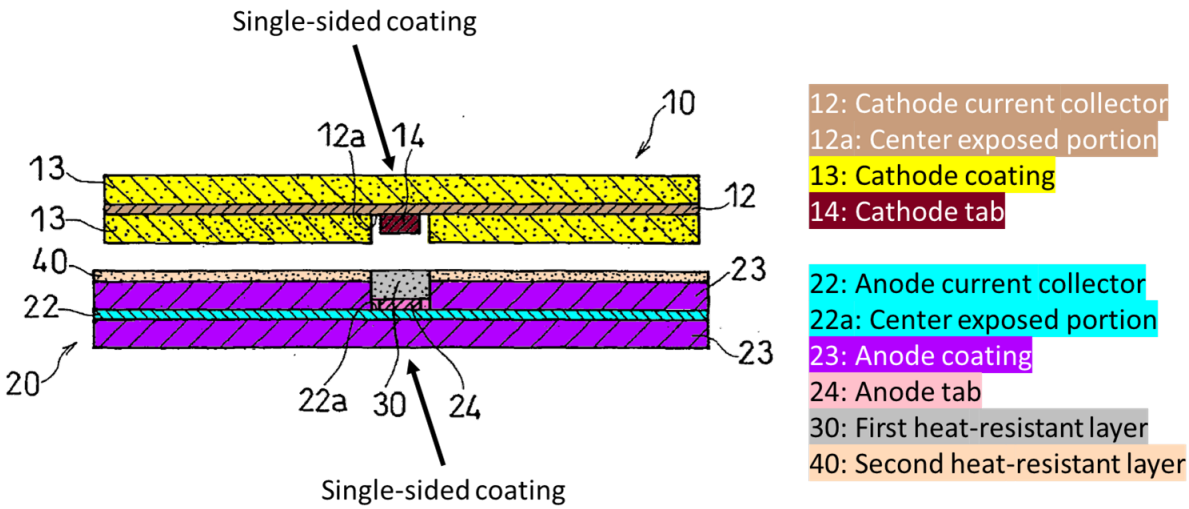


***Figure 27**: Battery of Fujikawa with Two Heat-Resistant Layers on the Anode*

Fujikawa discloses that the electrode coating comprising a single-sided coating and a double-sided coating offers benefits, stating "when the positive and negative electrodes each have a center exposed portion [as in Figures 26-27], further excellent high output characteristics can be obtained." Ex. 1009, ¶116. In fact, Fujikawa's exemplary batteries comprising an anode and a cathode both having a single-sided and a double-sided coating demonstrated excellent rate capacity, having the highest ratio of discharge capacity at 0.2 C versus 3 C of all batteries tested. Ex. 1009, Table 3 (Examples 38 and 39). Fujikawa demonstrates the efficacy of this battery structure through testing with a conventional electrolyte. Ex. 1009, ¶69. Ex. 1003, ¶331.

Hong discloses electrolytes that improve the high-temperature storage performance, cycling performance, and low-temperature charging performance of a lithium-ion battery. Ex. 1005, ¶5. In particular, Hong discloses that "[b]y comparing Embodiments 1-25 and Comparison Cases 1-6, it is found that the addition of a tricyanophosphite compound or a tricyanophosphate compound can effectively improve the battery's cycling performance, significantly increase the battery's capacity retention rate after storage at a high temperature, suppress thickness expansion, and mitigate lithium precipitation during low-temperature charging." Ex. 1005, ¶43. Ex. 1003, ¶332.

Embodiments 2-15, 18, 20-21, and 25 each disclose an electrolyte comprising 4 total wt % of dinitrile compounds, between 0.8-5 total wt % of trinitrile compounds, and propyl propionate and that satisfies Formulas (1)-(2). Ex. 1005, ¶¶34-35. Moreover, this set of embodiments includes the best performing embodiment for each test disclosed in Hong. Embodiment 25 demonstrated the lowest thickness change rate in the high-temperature cycle test, and Embodiment 21 demonstrated the highest capacity retention rate in that same test. Ex. 1005, ¶¶30-31, 42. Embodiment 20 demonstrated the highest capacity retention rate and recovery rate in the high-temperature storage test, and Embodiment 13 demonstrated the lowest thickness change rate in that test. Ex. 1005, ¶¶30-31, 41-42. Each of Embodiments 2-15, 18, 20-21, and 25 also protected against lithium precipitation during the low-temperature charge test. Ex. 1005, ¶¶30-31, 41-42. Ex. 1003, ¶333.

A person of ordinary skill in the art would have been motivated to incorporate the electrolyte of Hong into the battery structure of Fujikawa in order to obtain the benefits described in both references. A person of ordinary skill in the art would have understood that the selection of battery structure and electrolyte are independent choices. In other words, a given battery structure does not require a particular electrolyte, and vice versa. Ex. 1003, ¶334.

A person of ordinary skill in the art further would have had a reasonable expectation of success in modifying the lithium secondary battery of Fujikawa to

incorporate the electrolyte of Hong. Ex. 1003, ¶296. Fujikawa discloses a method of preparing a lithium battery that would have been readily understood by a person of ordinary skill in the art. Ex. 1009, ¶¶64-69, 96-97. Similarly, Hong discloses a method of preparing an electrolyte that would have been readily understood by a person of ordinary skill in the art. Ex. 1009, ¶26. A person of ordinary skill in the art would have understood that Fujikawa's electrolyte manufacturing step could be replaced with Hong's electrolyte manufacturing method. Ex. 1003, ¶335.

Moreover, Fujikawa considers the use of electrolytes having shared solvents and lithium salts, and additives intended for the same purpose as the electrolytes disclosed in Hong. Fujikawa discloses that the non-aqueous solvent may include ethylene carbonate, propylene carbonate, and diethyl carbonate. Ex. 1009, ¶59. Fujikawa states that combined use of two or more solvents is preferred and particularly preferred is a "mixed solvent of a cyclic carbonate, a chain carbonate and an aliphatic carboxylic acid ester." Ex. 1009, ¶59. Embodiments 2, 18, and 25 of Hong contain the cyclic carbonates ethylene carbonate and propylene carbonate, the chain carbonate diethyl carbonate, and the aliphatic carboxylic acid ester propyl propionate. Ex. 1005, ¶¶34-35. Ex. 1003, ¶336.

Fujikawa also states that the lithium salt may be lithium hexafluorophosphate ($LiPF_6$) or a lithium imide salt, used singly or in any combination of two or more. Ex. 1009, ¶58. Fujikawa adds that the lithium salt concentration is "more preferably

0.5 to 1.5 mol/L." Ex. 1009, ¶58. Embodiments 2 and 18 of Hong contain 1.1 M $LiPF_6$, while Embodiment 25 of Hong contains 1.0 M $LiPF_6$ and 0.5 M of the lithium imide salt LiTFSI. Ex. 1005, ¶¶34-35. Ex. 1003, ¶337.

Fujikawa further states that "[t]he non-aqueous electrolyte may further contain an additive so as to improve charge/discharge characteristics of the battery," such as vinylene carbonate (VC) or vinyl ethylene carbonate (VEC). Ex. 1009, ¶60. Fujikawa explains that the additives "form a coating film on the positive and/or negative electrodes, which improves the stability during overcharge." Ex. 1009, ¶60. Hong similarly states that "the tricyanophosphite compound or the tricyanophosphate compound contained in the electrolyte of the present invention can form films on the surfaces of the positive and negative electrodes. . . thereby stabilizing the structure of the positive electrode, [and] improving the SEI film at the negative electrode." Ex. 1005, ¶18. Embodiments 2 and 18 further contain VEC. Ex. 1005, ¶¶34-35. Ex. 1003, ¶338.

A person of ordinary skill in the art thus would have a reasonable expectation of success in producing an operable battery by modifying the lithium secondary battery of Fujikawa to incorporate the electrolyte of Hong. Ex. 1003, ¶339.

**2. Claim 14**

The combination of Fujikawa and Hong renders obvious claim 14. Ex. 1003, ¶340.

#### a. [14pre]: "The electrochemical device according to claim 13,"

The lithium-ion battery of Fujikawa modified to incorporate the electrolyte of Hong discloses an electrochemical device according to claim 13. Fujikawa discloses an electrochemical device comprising electrodes. Ex. 1009, ¶¶96-97 ("the positive and negative electrodes"). Hong discloses the electrolyte recited in claim 13, as explained in Section VII.A.8 above. Ex. 1003, ¶303. As explained in Section VII.E.1 above, a person of ordinary skill in the art would have been motivated with a reasonable expectation of success to incorporate the electrolyte of Hong into the lithium secondary battery of Fujikawa. Ex. 1003, ¶341.

#### b. [14.a]: "wherein the electrode comprises a current collector and a coating on the current collector,"

The combination of Fujikawa and Hong discloses an electrode comprising a current collector and a coating on the current collector. Fujikawa discloses that the positive electrode was obtained by applying a positive electrode material mixture paste to the positive electrode current collector and the negative electrode was obtained by applying a negative electrode material mixture paste to the negative electrode current collector. Ex. 1009, ¶¶65-66, 96-97, 89-91, *see also* ¶¶52-54. Ex. 1003, ¶¶342-343.

#### c. [14.b]: "the coating comprising a single-sided coating and a double-sided coating, wherein: the single-sided coating is a coating formed by applying a slurry on one surface of the current collector; and the double-

**sided coating is a coating formed by applying a slurry on two opposite surfaces of the current collector; and"**

The combination of Fujikawa and Hong discloses electrodes with a coating comprising a single-sided coating and a double-sided coating. Fujikawa discloses lithium secondary batteries in which a single-sided coating and a double-sided coating were formed on both the cathode and the anode. Ex. 1009, ¶¶64-66, 96-97, 89-91. Fujikawa states that the positive electrode paste "was applied onto each entire surface of a 15 μm thick aluminum foil serving as a positive electrode current collector 12 except for a center exposed portion 12a." Ex. 1009, ¶¶65, 96-97. Fujikawa further states that the negative electrode paste was applied to both surfaces of the negative current collector except at a center exposed portion 22a. Ex. 1009, ¶¶66, 96-97, 89-91. Fujikawa thus discloses a cathode and an anode, each comprising a single-sided coating (opposite the center exposed portions 12a and 22a, respectively) and a double-sided coating, as shown in Figure 28 and Figure 29 below. Ex. 1003, ¶¶344-346.

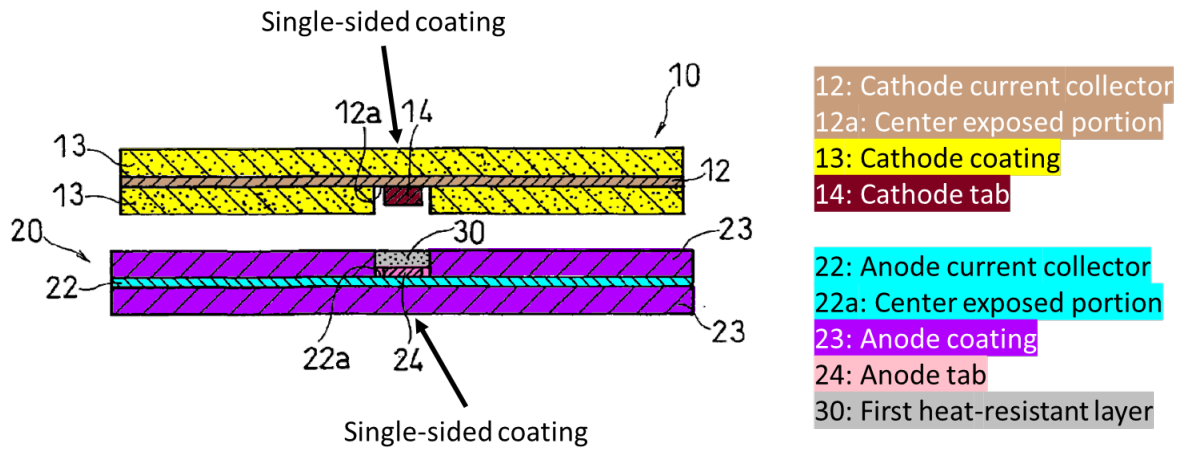


***Figure 28**: Battery of Fujikawa with One Heat-Resistant Layer on the Anode*

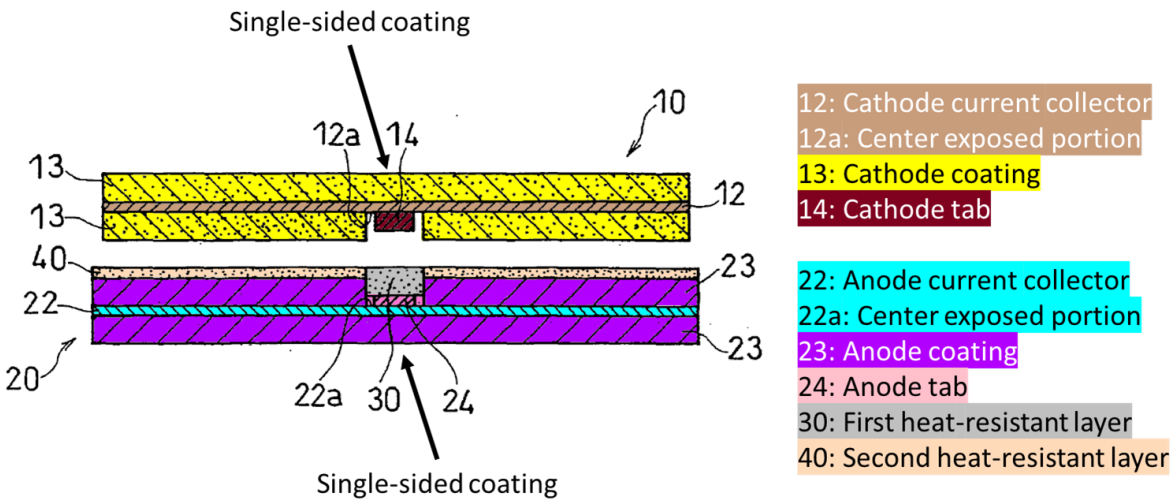


***Figure 29**: Battery of Fujikawa with Two Heat-Resistant Layers on the Anode*

**d. [14.c]: "the electrode with the single-sided coating has an electrode compaction density D1, and the electrode with the double-sided coating has an electrode compaction density D2, wherein D1 and D2 meet the relationship: about 0.8 ≤ D1/D2 ≤ about 1.2."**

The combination of Fujikawa and Hong discloses electrodes having a ratio between the electrode compaction density for the single-sided coating and the electrode compaction density for the double-sided coating that is within the claimed

range. Fujikawa discloses that the positive electrode active material layers "each hav[e] an active material density of 3.5 g/cm$^3$," so for the cathode, D1 = 3.5 g/cm$^3$ and D2 = 3.5 g/cm$^3$. Ex. 1009, ¶¶65, 96-97. Similarly, Fujikawa discloses that the negative electrode active material layers "each hav[e] an active material density of 1.6 g/cm$^3$," so for the anode, D1 = 1.6 g/cm$^3$ and D2 = 1.6 g/cm$^3$. Ex. 1009, ¶¶66, 96-97, 89-91. Thus, for both the cathode and the anode, D1/D2 = 1, which falls within the range recited in claim 14 of the '363 patent. Ex. 1003, ¶¶347-348.

#### 3. Claim 15: "The electrochemical device according to claim 14, wherein the electrodes comprise a cathode and a anode, wherein when the electrode is a cathode, 3.5 g/cm$^3$ ≤ D2 ≤ 4.3 g/cm$^3$; or when the electrode is an anode, 1.2 g/cm$^3$ ≤ D2 ≤ 1.8 g/cm$^3$."

Claim 15 is obvious over the combination of Fujikawa and Hong. Fujikawa discloses a cathode and an anode, each having a compaction density within the ranges recited in claim 15 of the '363 patent. As explained in Section VII.E.2.d above, Fujikawa discloses that the cathode has a compaction density of 3.5 g/cm$^3$ and that the anode has a compaction density of 1.6 g/cm$^3$. Ex. 1009, ¶¶64-66, 96-97, 89-91. These values fall within the ranges recited in claim 15. Ex. 1003, ¶¶349-350.

### F. Ground 6: Claim 16 Is Obvious over Hong

Claim 16 is obvious over Hong. Ex. 1003, ¶351.

#### 1. [16pre]: "An electronic device, comprising"

To the extent the preamble is limiting, a person of ordinary skill in the art would have found it obvious to use the lithium secondary batteries disclosed in

Hong, including Embodiments 2, 18, and 25, in an electronic device. Hong discloses that lithium secondary batteries "have been widely used in consumer electronic products, energy storage products, and power products," and describes that use as an impetus for its invention. Ex. 1005, ¶2. A person of ordinary skill in the art would have known how to connect a lithium secondary battery to an electronic device to provide power. A person of ordinary skill in the art would therefore have been motivated with a reasonable expectation of success to use the lithium secondary batteries disclosed in Hong in an electronic device. Ex. 1003, ¶352.

#### 2. [16.a]-[16.h]: "an electrochemical device that includes electrodes and an electrolyte comprising a dinitrile compound, a trinitrile compound, and propyl propionate, wherein, based on a total weight of the electrolyte, a weight percentage of the dinitrile compound is X and a weight percentage of the trinitrile compound is Y, where X and Y meet conditions represented by Formula (1) and Formula (2): about 2 wt % ≤ (X+Y) ≤ about 11 wt % (1); and about 0.1 ≤ (X/Y) ≤ about 8 (2)."

As explained in Section VII.A.8 above, Hong discloses an electrochemical device that includes electrodes and an electrolyte comprising a dinitrile compound, a trinitrile compound, and propyl propionate that satisfies Formulas (1) and (2). Ex. 1003, ¶353.

## VIII. THE BOARD SHOULD NOT EXERCISE ITS DISCRETION TO DENY INSTITUTION

### A. The Board Should Not Deny Institution Under § 325(d)

The Board should not exercise its discretion to deny institution. The relevant considerations are: (1) whether the same or substantially the same art previously was

presented to the Office or whether the same or substantially the same arguments previously were presented to the Office; and (2) if either condition of the first part of the framework is satisfied, whether the petitioner has demonstrated that the Office erred in a manner material to the patentability of challenged claims. *Advanced Bionics, LLC v. MED-EL Elektromedizinische Geräte GmbH*, IPR2019-01469, Paper 6 (P.T.A.B. Feb. 13, 2020).

Neither factor supports denial of institution. During prosecution, the Examiner did not consider Hong or Fujikawa, the primary references relied upon in this Petition for each ground presented, nor did the Examiner consider any reference that was cumulative of Hong or Fujikawa. Indeed, the Examiner did not reject any claims as anticipated by the prior art. Ground 1 of this Petition explains how Hong anticipates each of claims 1-6, 11, 13, and 16, and Grounds 2-6 rely on Hong to challenge the remaining claims of the ’363 patent for obviousness. Ground 5 relies on Fujikawa as the primary reference in combination with Hong as the secondary reference. While Kim ’934, asserted in combination with Hong in Ground 4 to challenge claim 12, was cited by the examiner in a rejection, the art and arguments of Ground 4 have not been considered by the Office because Hong was not before the Office during prosecution and is not cumulative of any reference that was.

The Office has previously granted institution where Petitioners challenge all claims based on uncited art. *See Oticon Medical AB v. Cochlear Limited*, IPR2019-

00975, Paper 15 at 20 (PTAB Oct. 16, 2019) (precedential) (declining to deny institution where "new, noncumulative prior art [is] asserted in the Petition"); *Western Digital Corp. v. Kuster*, IPR2020-01391, Paper 10 at 17-18 (PTAB Feb. 16, 2021) (declining to deny institution where only one of three principal references was before the Office and Patent Owner provided "no evidence that any of the combinations of [the] principal references. . . were previously before the Office, or are cumulative of the art that was before the Examiner"). It should do so again here.

### B. The Board Should Not Deny Institution Under § 314(a)

The Board should not exercise its discretion to deny institution under § 314(a). This Petition has been filed well before the one-year bar date imposed by 35 U.S.C. § 315(b) in view of Patent Owner's assertion of the '363 patent against Petitioner in *Ningde Amperex Tech. Ltd. v. Zhuhai CosMX Battery Co., Ltd.*, Civ. No. 2:22-cv-00232-JRG (E.D. Tex.). Moreover, *Fintiv* and the Office's interim guidelines dated June 21, 2022 ("Interim Procedures") require institution. IPR2020-00019, Paper 11 (Mar. 20, 2020) (precedential). As detail below, Factor 6 requires institution; Factors 3 and 4 favor institution; and Factors 1, 2, and 5 are, at worst, neutral.

Factor 6 requires institution because Petitioner presents a compelling unpatentability challenge. "[W]here the PTAB determines that the information presented at the institution stage presents a compelling unpatentability challenge, <u>that determination alone</u> demonstrates that the PTAB should not discretionarily deny

institution under *Fintiv*." Interim Procedures, 4-5 (emphasis added). The Interim Procedures define a compelling challenge as one in which "the evidence, if unrebutted in trial, would plainly lead to a conclusion that one or more claims are unpatentable by a preponderance of the evidence." Interim Procedures, 4. As explained in this Petition, the evidence plainly demonstrates that claims 1-6, 11, 13, and 16 are anticipated by Hong and that the remaining claims are obvious.

Factor 3 further favors institution because almost no parallel investment has occurred. *See Nearmap US, Inc. v. Eagle View Techs., Inc.*, IPR2022-01009, Paper 7 at 9 ("The litigation also is in a relatively early stage because the parties appear to have recently completed exchanging infringement and invalidity contentions and no claim construction hearing has occurred."). The parties only finished exchanging infringement and invalidity contentions last month, and the claim construction hearing is not scheduled until August 2023. Ex. 1029, 4-5. *Id.*

Factor 4 favors institution because this petition challenges claims 7-9, 10, 12, and 14-15, which are not involved in the litigation. Petitioner also reserves the right to submit a stipulation to address Factor 4 based upon developments here and/or in the related litigation.

Regarding Factors 1, 2, and 5, Patent Owner filed its Amended Complaint (asserting the presently challenged '363 patent for the first time) against Petitioner on August 2, 2022. Ex. 1031. No stay has been requested, trial is currently scheduled

for February 5, 2024, and the median time-to-trial in the Eastern District of Texas is 24.2 months, so trial is projected to occur, at the earliest, in June or July 2024. Ex. 1029, 1; Ex. 1030, 35; Ex. 1032, 12. A FWD is anticipated in August or September 2024, about six months after trial if the current schedule is maintained or about one month after trial if the median time-to-trial holds true. In these circumstances, Factors 1, 2, and 5 are at worst neutral. *Protect Animals with Satellites v. OnPoint Sys.*, IPR2021-01483, Paper 11 at 12-13, 17 (Mar. 4, 2022). Indeed, the Board has instituted with similar time between trial and FWD. *See NetNut v. Bright Data*, IPR2021-01492, Paper 12 at 9-16 (Mar. 21, 2022) (instituting IPR without stipulation and co-pending trial date six months before FWD); *Protect Animals*, IPR2021-01483, Paper 11 at 18 (instituting IPR without stipulation and co-pending trial date one month before FWD); Interim Procedures, 8.

Denial of institution is accordingly not warranted under *Fintiv*.

## IX. MANDATORY NOTICES UNDER 37 C.F.R. § 42.8

### A. Real Parties-in-Interest

Zhuhai CosMX Battery Co., Ltd. is the real party-in-interest.

### B. Related Matters

Patent Owner has asserted the ’363 patent against Petitioner in *Ningde Amperex Tech. Ltd. v. Zhuhai CosMX Battery Co., Ltd.*, Civ. No. 2:22-cv-00232-JRG (E.D. Tex.). Petitioner filed a declaratory judgment of noninfringement of the ’363 patent in *Zhuhai CosMx Battery Co., Ltd. v. Ningde Amperex Tech. Ltd.*, Civ. No.

5:22-cv-04510-BLF (N.D. Cal.). Petitioner is aware that foreign counterparts of the ’363 patent are involved in the following proceedings: District Court I, Munich, file numbers 44 O 11698/22 and 44 O 11725/22 in Europe and Case Nos. 4W114659 and 4W115325 in invalidity proceedings in China. Petitioner is not aware of any other related matters.

### C. Lead and Backup Counsel

| Lead Counsel | Backup Counsel |
|---|---|
| Michele C. Bosch (Reg. No. 40,524)<br>michele.bosch@finnegan.com<br>Finnegan, Henderson, Farabow,<br>Garrett & Dunner, LLP<br>901 New York Avenue, NW<br>Washington, DC 20001<br>Tel: 202-408-4193<br>Fax: 202-408-4400 | Joshua L. Goldberg (Reg. No. 59,369)<br>joshua.goldberg@finnegan.com<br>Finnegan, Henderson, Farabow,<br>Garrett & Dunner, LLP<br>901 New York Avenue, NW<br>Washington, DC 20001<br>Tel: 202-408-6092<br>Fax: 202-408-4400<br><br>Richard Hildreth III (Reg. No. 80,415)<br>richard.hildreth@finnegan.com<br>Finnegan, Henderson, Farabow,<br>Garrett & Dunner, LLP<br>901 New York Avenue, NW<br>Washington, DC 20001<br>Tel: 202-408-4327<br>Fax: 202-408-4400<br><br>Daniel F. Klodowski (Reg. No. 72,693)<br>daniel.klodowski@finnegan.com<br>Finnegan, Henderson, Farabow,<br>Garrett & Dunner, LLP<br>901 New York Avenue, NW<br>Washington, DC 20001<br>Tel: 202-408-4216<br>Fax: 202-408-4400 |

| | |
|---|---|
| | A. Grace Mills (Reg. No. 66,946)<br>gracie.mills@finnegan.com<br>Finnegan, Henderson, Farabow,<br>Garrett & Dunner, LLP<br>901 New York Avenue, NW<br>Washington, DC 20001<br>Tel: 202-408-4389<br>Fax: 202-408-4400 |

### D. Service Information

Please send all correspondence to lead counsel at the address shown above. Petitioner consents to service by e-mail at the e-mail addresses identified in the table above.

## X. GROUNDS FOR STANDING

Petitioner certifies that the ’363 patent is available for IPR and that Petitioner is not barred or estopped from requesting an IPR challenging the patent claims on the grounds identified herein.

## XI. PAYMENT OF FEES

The required fees are submitted herewith in accordance with 37 C.F.R. §§ 42.103(a) and 42.15(a). If any additional fees are due during this proceeding, the Office is authorized to charge such fees to Deposit Account No. 06-0916.

## XII. CONCLUSION

CosMX respectfully requests that the Board grant this Petition for *Inter Partes* Review, institute trial, and find claims 1–16 of the ’363 patent unpatentable.

Respectfully submitted,

Date: February 23, 2023

By: /Michele C. Bosch/
Michele C. Bosch (Reg. No. 40,524)

## CERTIFICATION OF COMPLIANCE

The undersigned hereby certifies that the foregoing Petition contains 13,785 words, excluding those portions identified in 37 C.F.R. § 42.24(a), as measured by the word-processing system used to prepare this paper.

By: /Michele C. Bosch/
Michele C. Bosch (Reg. No. 40,524)

## CERTIFICATE OF SERVICE

Pursuant to 37 C.F.R. §§ 42.6(e) and 42.105(a), the undersigned certifies that on February 23, 2023, a copy of the foregoing **Petition for *Inter Partes* Review**, the associated **Power of Attorney**, and **Exhibits 1001 through 1032** were served by FedEx Priority Overnight at the correspondence address of record indicated in the Patent Office's Patent Center system for U.S. Patent No. 10,833,363:

Juan Carlos A. Marquez
MARQUEZ INTELLECTUAL PROPERTY LAW OFFICE PLLC
1629 K Street, NW
Suite 300
Washington, DC 20006

Date: February 23, 2023

By: /William Esper/
William Esper
Case Manager and PTAB Coordinator
FINNEGAN, HENDERSON, FARABOW, GARRETT & DUNNER, LLP