KIRKLAND & ELLIS LLP

1301 Pennsylvania Avenue, N.W.
Washington, D.C. 20004
United States

+1 202 389 5000

www.kirkland.com

Paul F. Brinkman, P.C.
To Call Writer Directly:
+1 202 389 5033
paul.brinkman@kirkland.com

Facsimile:
+1 202 389 5200

May 5, 2025

BY EDIS

The Honorable Lisa R. Barton
Secretary to the Commission
U.S. International Trade Commission
500 E Street, S.W., Room 112
Washington, DC 20436

Re: *In the Matter of Certain Glow Fish Tape Systems, Safety Helmet Systems, and Component Thereof*, Inv. No. 337-TA-1442

Dear Secretary Barton:

In accordance with Chief Administrative Law Judge Cheney's instructions in Order No. 6 (EDIS No. 850199), enclosed for filing please find Klein Tools, Inc's Amended Complaint in the above-referenced Investigation.

If you have questions or concerns, please feel free to call me.

Sincerely,

/s/ Paul F. Brinkman, P.C.

Paul F. Brinkman, P.C.

UNITED STATES INTERNATIONAL TRADE COMMISSION
WASHINGTON, D.C.

Before The Honorable
Chief Administrative Law Judge Clark S. Cheney

In the Matter of **CERTAIN GLOW FISH TAPE SYSTEMS, SAFETY HELMET SYSTEMS, AND COMPONENTS THEREOF**	**Investigation No. 337-TA-1442**

FIRST AMENDED COMPLAINT UNDER SECTION 337 OF THE TARIFF ACT OF 1930, AS AMENDED

COMPLAINANT

Klein Tools, Inc.
450 Bond Street
Lincolnshire, IL 60069
Tel. (847) 821-5500

RESPONDENT

Milwaukee Electric Tool Corporation
13135 West Lisbon Road
Brookfield, WI 53005
Telephone: (800) 729-3878

COUNSEL FOR COMPLAINANT

Paul F. Brinkman, P.C.
Kirkland & Ellis LLP
1301 Pennsylvania Avenue, N.W.
Washington, D.C. 20004
Telephone: (202) 389-5000
Email: paul.brinkman@kirkland.com

Gregory S. Arovas, P.C.
Ryan Kane, P.C.
Alan Rabinowitz
Jae Hyun Kim
Mara Greenberg
Robert Endrizzi
Kirkland & Ellis LLP
601 Lexington Avenue
New York, NY 10022
Telephone: (212) 446-4800
Email: greg.arovas@kirkland.com
Email: ryan.kane@kirkland.com
Email: alan.rabinowitz@kirkland.com

TABLE OF CONTENTS

I. INTRODUCTION 1

II. THE PARTIES 2

A. Complainant Klein Tools, Inc. 2

B. Respondent Milwaukee Electric Tool Corporation 3

III. THE TECHNOLOGY AND PRODUCTS AT ISSUE 4

A. Glow Fish Tape Systems ('209 and '573 Patents) 4

B. Safety Helmet Systems ('327 and '265 Patents) 7

IV. THE ASSERTED PATENTS AND NONTECHNICAL DESCRIPTIONS OF THE INVENTIONS 10

A. The '209 Patent 10

i. Identification and Ownership of the '209 Patent 10

ii. Expiration date for the '209 Patent 10

iii. Foreign & Domestic Counterparts to the '209 Patent 10

iv. Non-technical Description of the '209 Patent 11

v. Licensees to the '209 Patent 11

B. The '573 Patent 11

i. Identification and Ownership of the '573 Patent 11

ii. Expiration date for the '573 Patent 11

iii. Foreign & Domestic Counterparts to the '573 Patent 11

iv. Non-technical Description of the '573 Patent 12

v. Licensees to the '573 Patent 12

C. The '327 Patent 12

i. Identification and Ownership of the '327 Patent 12

ii. Expiration Date for the '327 Patent 13

iii. Foreign & Domestic Counterparts to the '327 Patent 13

iv. Non-Technical Description of the ’327 Patent 13

v. Licensees to the ’327 Patent 13

D. The ’265 Patent 14

i. Identification and Ownership of the ’265 Patent 14

ii. Expiration Date for the ’265 Patent 14

iii. Foreign & Domestic Counterparts to the ’265 Patent..... 14

iv. Non-Technical Description of the ’265 Patent 14

v. Licensees to the ’265 Patent 15

V. RESPONDENT’S UNLAWFUL AND UNFAIR ACTS 15

A. Importation and Sale 15

B. Direct Infringement..... 20

i. The ’209 Patent 20

ii. The ’573 Patent 20

iii. The ’327 Patent 20

iv. The ’265 Patent 21

C. Indirect Infringement 21

i. The ’209 and ’573 Patents 21

ii. The ’327 and ’265 Patents 26

VI. CLASSIFICATION OF THE INFRINGING PRODUCTS UNDER THE HARMONIZED TARIFF SCHEDULE 36

VII. RELATED PROCEEDINGS..... 36

VIII. THE DOMESTIC INDUSTRY 36

A. Klein Tools’ Articles that Practice the Asserted Patents (Technical Prong) 36

B. United States Economic Activities Relating to the Domestic Industry Products and the Asserted Patents (Economic Prong)..... 38

IX. RELIEF REQUESTED..... 41

EXHIBITS

Exhibit ("Ex.")	Description
1	Certified Copy of U.S. Patent No. 11,452,327
2	Certified Copy of U.S. Patent No. 11,713,209
3	Certified Copy of U.S. Patent No. 12,187,573
4	Certified Copy of Assignment Record for U.S. Patent No. 11,452,327
5	Certified Copy of Assignment Record for U.S. Patent No. 11,713,209
6	Certified Copy of Assignment Record for U.S. Patent No. 12,187,573
7	Exhibit Not Used
8	Infringement Claim Chart for U.S. Patent No. 11,452,327
9	Infringement Claim Chart for U.S. Patent No. 11,713,209
10	Infringement Claim Chart for U.S. Patent No. 12,187,573
11	Domestic Industry Claim Chart for U.S. Patent No. 11,452,327
12	Domestic Industry Claim Chart for U.S. Patent No. 11,713,209
13	Domestic Industry Claim Chart for U.S. Patent No. 12,187,573
14	Declaration of John Hankus (**Confidential**)
14A	Second Declaration of John Hankus (**Confidential**)
15	TTI 2023 Annual Report
16	About, Milwaukee
17	About Us, TTI
18	*Klein Tools'® New Glow Fish Tape Perfect for Low Light Applications* (Dec. 17, 2020)
19	*Klein Tools® Launches 40' Glow in the Dark Fish Tape for Increased Visibility and Function* (Feb. 14, 2023)
20	Milwaukee, 20' Glow Fish Tape. Available at https://www.milwaukeetool.com/Products/48-22-4182
21	*Klein Tools'® New Hard Hats Designed for Pros–Safety, Comfort and Fit* (July 23, 2019)
22	*Klein Tools'® New Safety Helmets Designed to Keep Professionals Safe and Comfortable* (Aug. 19, 2020)
23	*Klein Tools'® New Hard Hats Provide Professionals Safety with All Day Comfort* (Sep. 24, 2020)
24	*Klein Tools'® Innovative New Fan Takes Jobsite Cooling to the Next Level* (Nov. 11, 2021)
25	Milwaukee, 40' Glow Fish Tape. Available at https://www.milwaukeetool.com/Products/48-22-4184
26	*Klein Tools'® New Rechargeable Headlamp Offers Multiple Modes to Fit Any Task* (Mar. 3, 2021)
27	Head Protection – BOLT Overview, Milwaukee Tool
28	British Patent GB2591335B
29	Australian Patent Application AU2020277134A1

Exhibit ("Ex.")	Description
30	January 16, 2025, The Home Depot Order Confirmation for Milwaukee BOLT™ REDLITHIUM™ USB Headlamp (2118-21)
31	January 16, 2025, The Home Depot Order Confirmation for Milwaukee 20' Glow Fish Tape (48-22-4182)
32	Milwaukee, Buy Now. Available at https://www.milwaukeetool.com/Buy-Now
33	Milwaukee, 20' Glow Fish Tape (48-22-4182), Where to Buy. Available at https://www.milwaukeetool.com/Products/48-22-4182
34	Milwaukee, 48-73-1200, Where to Buy. Available at https://www.milwaukeetool.com/Products/48-73-1200
35	The Home Depot, Milwaukee 20 ft. Glow Fish Tape
36	Milwaukee 20' Glow Fish Tape Information Card
37	Milwaukee 2118-21 Product Page
38	Milwaukee 48-73-1094 Product Page
39	Grainger Listing for Hard Hat Headlamp Mount (48-73-1090)
40	BOLT™ Front Brim Hard Hat w/ Rechargeable Headlamp (48-73-1200-2118-21)
41	Milwaukee 48-73-1200 Product Page
42	Milwaukee 48-73-1101, Full Brim Hard Hat w/ 4pt Ratcheting Suspension Product Page
43	58-22-0146d1 (Milwaukee USB Headlamp Operator's Manual)
44	Canadian Patent Application CA3031264A1
45	January 16, 2025, The Home Depot Order Confirmation for Milwaukee BOLT™ Front Brim Hard Hat w/4pt Ratcheting Suspension (48-73-1200)
46	Import Genius
47	Klein Tools, Glow in the Dark Fish Tape, 20-Foot. Available at https://www.kleintools.com/catalog/fish-tapes/glow-dark-fish-tape-20-foot
48	Klein Tools, Glow in the Dark Fish Tape, 20-Foot Brochure
49	BOLT™ Front Brim Safety Helmet with IMPACT ARMOR™ Liner
50	Milwaukee® BOLT™ Head Protection and Accessories, https://www.youtube.com/watch?v=ZO5rF2p0rWQ
51	Photos of Klein Tools' Glow in the Dark Fish Tape, 20-Foot (50550)
52	Photos of Milwaukee 20' Glow Fish Tape (48-22-4182)
53	Photos of Milwaukee Bolt System Physical Exhibits
54	Photos of Klein Tools Safety Helmet System Physical Exhibits
55	Klein Tools 60407 Product Page & Images, https://www.kleintools.com/catalog/standard-hard-hats/hard-hat-vented-full-brim-headlamp-white
56	Milwaukee Hard Hat Specification Sheet
57	Red Tool Store Listing for 48-73-1200
58	58-22-1200d1 (Milwaukee Operator's Manual)
59	Instructions for Klein Hard Hats (1390253 Rev 02/22 F)
60	January 31, 2025, The Home Depot Order Confirmation for Certain Milwaukee BOLT Accessories
61	Copy of U.S. Patent No. 12,268,265*

Exhibit ("Ex.")	Description
62	Copy of Assignment Record for U.S. Patent No. 12,268,265*
63	Infringement Claim Chart for U.S. Patent No. 12,268,265
64	Domestic Industry Claim Chart for U.S. Patent No. 12,268,265
65	Klein Tools Hard Hat System Brochure, 82810 Rev 07/20 B
66	Supplemental Photos of Milwaukee Bolt System Physical Exhibits
67	Supplemental Photos of Klein Tools Safety Helmet System Physical Exhibits

*Klein Tools has ordered certified copies of U.S. Patent No. 12,268,265 and its assignment record, and once received, will substitute them for the non-certified versions submitted herewith.

PHYSICAL EXHIBITS

Physical Exhibit	Description
P1	Klein Tools Glow in the Dark Fish Tape, 20-Foot (50550)
P2	Milwaukee 20' Glow Fish Tape (48-22-4182)
P3	Klein Tools Hard Hat, Vented, Full Brim with Headlamp, White (60407)
P4	Klein Tools Rechargeable Safety Lamp with Magnet (56063)
P5	Klein Tools Hard Hat Fan Modular Battery (29025)
P6	Klein Tools Cooling Fan for Hard Hat and Safety Helmet (60155)
P7	Klein Tools Wide-Beam Headlamp with Mount for Hard Hat (KHH56308)
P8	Klein Tools Hard Hat Turbo Fan (60821)
P9	Klein Tools Lightweight Cooling Fan for Hard Hats (60523)
P10	Milwaukee BOLT™ Front Brim Hard Hat w/4pt Ratcheting Suspension (48-73-1200)
P11	Milwaukee BOLT™ REDLITHIUM™ USB Headlamp (2118-21)
P12	BOLT Clear Uncoated Lens Task Full Face Shield (48-73-1460)
P13	BOLT Task Full Face Shield Replacement Frame (48-73-1461)
P14	BOLT Clear Dual Coat Lens Eye Visor (48-73-1410)
P15	BOLT Eye Visor Mount Replacement (48-73-1458)
P16	BOLT Yellow High Visibility Mesh Sunshade with 50+ UPF UV Protection (48-73-1070)
P17	BOLT Tinted Brim Visor with High Visibility Yellow Mesh Sunshade and 360-Degree UV Protection (48-73-1072)
P18	BOLT Tinted Brim Yellow High Visibility Visor with 360-Degree UV Protection (48-73-1073)

APPENDICES

Appendix	Description
A	Certified Copy of Prosecution History of U.S. Patent No. 11,452,327
B	Certified Copy of Prosecution History of U.S. Patent No. 11,713,209
C	Certified Copy of Prosecution History of U.S. Patent No. 12,187,573
D	Copy of the Prosecution History of U.S. Provisional Patent Application 62/622,472
E	Copy of the Prosecution History of U.S. Provisional Patent Application 62/645,491
F	Certified Copy of Prosecution History of U.S. Patent No. 12,268,265

I. INTRODUCTION

1. Klein Tools, Inc. ("Klein Tools" or "Complainant") requests that the United States International Trade Commission commence an investigation pursuant to Section 337 of the Tariff Act of 1930, as amended, 19 U.S.C. § 1337, based on the unlawful importation into the United States, the sale for importation, and the sale within the United States after importation of certain glow fish tape systems, safety helmet systems, and components thereof (collectively, "the Accused Products"), that directly or indirectly infringe, either literally and/or under the doctrine of equivalents, one or more of the following claims (collectively, the "Asserted Claims") of United Sates Patent Nos. 11,452,327; 12,268,265, 11,713,209; and 12,187,573 (collectively, "the Asserted Patents"):

Asserted Patent	Asserted Claims (Independent Claims Bolded)
U.S. Patent No. 11,452,327	**1**, 3–7, **8**, 10–11, 13–15, **16**, **17**
U.S. Patent No. 12,268,265	**1,** 2–4
U.S. Patent No. 11,713,209	**6**, 8–9, 11, **14**–17
U.S. Patent No. 12,187,573	**1**–2, 4, **6**–8, 10, **14**–17

2. Exhibits 1–3 are certified copies of the '327, '209, and '573 Patents, and Exhibit 61 is a copy of the '265 Patent. Exhibits 4–6 are certified copies of the assignment records relating to the '327, '209, and '573 Patents, and Exhibit 62 is a copy of the assignment record relating to the '265 Patent.[1] Klein Tools owns the Asserted Patents, including the right to sue for infringement.

3. The Respondent is Milwaukee Electric Tool Corporation ("Milwaukee" or "Respondent"). On information and belief, Respondent has engaged in unfair acts in violation of Section 337 through and in connection with its unlicensed importation into the United States, sale

[1] Klein Tools has ordered certified copies of the '265 Patent and its assignment record, and once received, will substitute them for the non-certified versions submitted herewith.

for importation into the United States, and/or its sale within the United States after importation of the Accused Products.

4. A domestic industry exists in the United States for articles protected by the Asserted Patents. *See* 19 U.S.C. § 1337(a)(2), (3). The domestic industry includes Klein Tools' significant domestic investments in plant and equipment and significant domestic employment of labor and capital relating to Klein Tools' products protected by the Asserted Patents, and substantial domestic investment in exploiting the inventions claimed in the Asserted Patents.

5. Klein Tools seeks a permanent limited exclusion order barring from entry into the United States the infringing Accused Products that are made abroad, sold for importation, imported, and/or sold in the United States after importation by or on behalf of Milwaukee. *See* 19 U.S.C. § 1337(d). Klein Tools also seeks a permanent cease-and-desist order prohibiting Milwaukee from importing, selling, marketing, advertising, distributing, offering for sale, transferring (except for exportation), soliciting United States agents or distributors, or aiding and abetting other entities in the importation, sale for importation, sale after importation, transfer (except for exportation), or distribution of the infringing Accused Products. *See id.* § 1337(f).

6. Further, Klein Tools requests that the Commission impose a bond upon Milwaukee's importation or sale of infringing Accused Products during the 60-day Presidential review period pursuant to 19 U.S.C. § 1337(j) to prevent further injury to Klein Tools' domestic industry.

II. THE PARTIES

A. Complainant Klein Tools, Inc.

7. Klein Tools, Inc. is a corporation organized and existing under the laws of the State of Delaware with a principal place of business at 450 Bond Street, Lincolnshire, Illinois 60069.

8. Klein Tools was founded in 1857 by Mathias Klein, a German immigrant who moved west to set up shop in Chicago's bustling downtown business district. Since 1857, the family company—operated by Mathias Klein and his descendants to the sixth generation—has grown and developed along with American industry. Well-known for over 150 years for its legendary pliers and hand tools, no other manufacturer of hand tools and related products for the telecommunications and electrical industry makes more items in America than Klein Tools. Today, Klein Tools' product line has expanded into a wide range of tools, instruments, and personal protective equipment, including glow fish tape systems and safety helmet systems, the patent-protected products at issue here.

9. Klein Tools' business operations include product design, research and development, manufacturing, testing and qualification, operations, sales, marketing, logistics and customer service for products that practice the Asserted Patents, as well as other products for a wide range of trades. The technology behind Klein Tools' innovative glow fish tape systems and safety helmet systems was developed and continues to be developed domestically through Klein Tools' research, design, and development activities.

B. Respondent Milwaukee Electric Tool Corporation

10. Milwaukee Electric Tool Company is a corporation organized and existing under the laws of the State of Delaware with a principal place of business at 13135 West Lisbon Road, Brookfield, Wisconsin, 53005.

11. Milwaukee is a wholly-owned subsidiary of Techtronic Industries Co., Ltd. ("TTI"), a Hong-Kong-based multinational company with a principal place of business at 29/F, Tower 2, Kowloon Commerce Centre, 51 Kwai Cheong Road, Kwai Chung, New Territories, Hong Kong. Ex. 15, TTI 2023 Annual Report at 102. Milwaukee was acquired by TTI in 2005. Ex. 16, *About*, Milwaukee. TTI owns a number of tool brands other than Milwaukee, including

Ryobi, AEG, Empire, Homelite, and floorcare brands including Hoover, Oreck, Vax, and Dirt Devil. Ex. 17, *About Us*, TTI.

12. Milwaukee imports and sells a wide range of electric power tools, accessories, hand tools, personal protective equipment, and storage products.

13. Milwaukee imports and sells glow fish tape systems ("the Accused Glow Fish Tape Systems").

14. Milwaukee imports and sells safety helmet systems, including hard hats, safety helmets and accessories designed for them ("the Accused Bolt System").

15. On information and belief, the Accused Glow Fish Tape Systems are manufactured abroad, imported into the United States, and sold within the United States by and for Milwaukee.

16. On information and belief, components of the Accused Bolt System (including components of its hard hats and accessories designed for the system) are manufactured abroad, imported into the United States, and sold within the United States by and for Milwaukee.

III. THE TECHNOLOGY AND PRODUCTS AT ISSUE[2]

17. Pursuant to 19 C.F.R. §§ 210.10(b)(1) and 210.12(a)(12), the categories of accused products are glow fish tape systems, safety helmet systems—the latter of which include safety helmets and hard hats with an outer shell including a brim and front and rear receptacles, and accessory devices that are releasably mountable onto at least a portion of each of the front and rear receptacles—and components thereof.[3]

A. Glow Fish Tape Systems ('209 and '573 Patents)

[2] This Complaint, including this section, does not, and is not intended to, construe or limit the scope or meaning of the Asserted Patents or any of their claims.

[3] Klein Tools incorporates the supplement to this paragraph contained in its letter dated March 3, 2025. Letter from P. Brinkman to Secretary Barton (EDIS Doc. ID 844785).

18. A fish tape system is a spool of tape stored in a case that can be used to guide wires through enclosed spaces such as walls or conduits.

19. The technology at issue related to the ’209 and ’573 Patents includes, among other things, fish tape systems where the fish tape comprises luminescent material that can be energized while in the case. Luminescent fish tape is particularly useful for guiding wires in low-light conditions.

20. Klein Tools is an industry leader in manufacturing fish tape systems, fish rods, and conduit tools. On December 17, 2020, Klein Tools published a press release introducing its 20-Foot Glow Fish Tape, “Klein’s first fully glow-in-the-dark fish tape, providing a bright glow for use in low light” applications, such as pulling wire or cable through conduit or into enclosed wall space. Ex. 18, *Klein Tools’® New Glow Fish Tape Perfect for Low Light Applications* (Dec. 17, 2020); Ex. P1, Physical Exhibit of Klein Tools’ Glow in the Dark Fish Tape, 20-Foot (50550). Klein Tools’ press release identified the product as then “Patent Pending.”

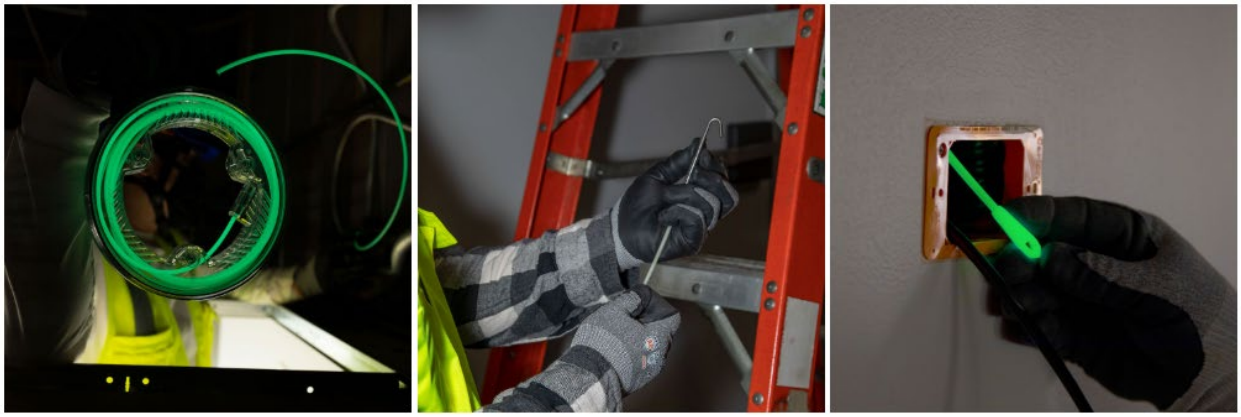

Ex. 18.

21. Subsequently, on February 14, 2023, Klein Tools launched its 40’ Glow in the Dark Fish Tape “for Increased Visibility and Function.” Ex. 19, *Klein Tools® Launches 40’ Glow in the Dark Fish Tape for Increased Visibility and Function* (Feb. 14, 2023).

22. The Accused Glow Fish Tape Systems consist of Milwaukee's infringing 20' Glow Fish Tape and its infringing 40' Glow Fish Tape. *See* Ex. 15, TTI Annual Report 2023 at 27; Ex. 20, Milwaukee, *20' Glow Fish Tape*; Ex. 25, Milwaukee, *40' Glow Fish Tape*. On information and belief, Milwaukee, or others on its behalf, makes the infringing Accused Glow Fish Tape Systems in Taiwan or another country other than the United States, then imports into the United States, sells for importation into the United States, and/or sells within the United States after importation, the infringing Accused Glow Fish Tape Systems in order to directly compete with Klein Tools' innovative Glow Fish Tape Systems.

23. Among other features, Milwaukee advertises its Accused Glow Fish Tape Systems as "deliver[ing] easier fishing and bright glow in low light applications," "[t]he open slots throughout the case allow[ing] light to easily charge the tape resulting in a bright glow in the dark." Exs. 20, 25. An overview of the Accused Glow Fish Tape Systems is shown below:

Exs. 20, 25; *see also* Ex. P2, Physical Exhibit of Milwaukee 20' Glow Fish Tape (48-22-4182).

24. The Accused Glow Fish Tape Systems infringe one or more claims of the Asserted Patents, as set forth below.

B. Safety Helmet Systems ('327 and '265 Patents)

25. Safety helmets and hard hats are personal protective equipment (PPE) that are designed to protect a user's head from impacts. Safety helmets are commonly referred to as "hard hats." Ex. 1, '327 Patent at 1:16–17; Ex. 61, '265 Patent at 1:17–18.

26. The technologies at issue related to the '327 and '265 Patents are safety helmet systems, including safety helmets, a category that includes hard hats, with an outer shell including a brim and front and rear receptacles, and accessories such as headlamps, safety lamps, cooling fans, sun visors, face shields, eye visors, and batteries that are designed to be releasably mountable onto at least a portion of each of the front and rear receptacles, and components thereof.

27. On July 23, 2019, Klein Tools published a press release about its new generation of hard hat systems, designed, engineered, and built with safety, comfort, and fit for the tradespeople who wear them every day. These new hard hat systems incorporated the receptacle features discussed above and other innovative features such as reversible donning, a flexible open-frame suspension, one-handed adjustment with a large knob ratchet, and more. Klein Tools' press release identified the product as then "patent-pending."

Ex. 21, *Klein Tools'® New Hard Hats Designed for Pros–Safety, Comfort and Fit* (July 23, 2019).

28. Since then, Klein Tools has continuously extended its hard hat system by introducing new hard hats, including hard hats made with carbon fiber, and by introducing new accessory devices designed to be compatible with Klein Tools' innovative front and back accessory mounts, including headlamps, fans, and safety lamps.

Ex. 22, *Klein Tools'® New Safety Helmets Designed to Keep Professionals Safe and Comfortable* (Aug. 19, 2020); Ex. 23, *Klein Tools'® New Hard Hats Provide Professionals Safety with All Day Comfort* (Sep. 24, 2020); Ex. 26, *Klein Tools'® New Rechargeable Headlamp Offers Multiple Modes to Fit Any Task* (Mar. 3, 2021); Ex. 24, Klein Tools'® Innovative New Fan Takes Jobsite Cooling to the Next Level (Nov. 9, 2021); Exs. P3—P9 (Klein Tools Safety Helmet System Physical Exhibits).

29. The Accused Bolt System consists of various hard hats, safety helmets, accessories, and components thereof. The Accused Bolt System accessories include headlamps, batteries, headlamp mounts, face shields, eye visors, and sun visors. Ex. 27, Head Protection – BOLT Overview, Milwaukee Tool; Exs. P10—P18 (Accused Bolt System Physical Exhibits). On information and belief, Milwaukee, or others on its behalf, makes components of the Accused Bolt System in China or another country other than the United States, then imports into the United States, sells for importation into the United States, and/or sells within the United States after importation, those Accused Bolt System components in order to directly compete with Klein Tools' innovative Hard Hat System.

30. Among other features, Milwaukee advertises its Bolt System as designed to allow a user to "use multiple accessories at once" with a single hard hat. Ex. 27, Head Protection – BOLT Overview, Milwaukee Tool. An overview of the Milwaukee BOLT System is shown below:

The Milwaukee® BOLT™ System allows you to secure accessories simultaneously. Built on the Milwaukee® BOLT™ Helmets and Hard Hats, this versatile system allows you to use multiple accessories at once. If the job changes, you can quickly swap out accessories, providing you protection and efficiency on the jobsite. The Milwaukee® BOLT™ System allows you to secure accessories simultaneously, so you can STAY SAFE. STAY PRODUCTIVE.™

Id. at 1.

31. The Accused Bolt Systems infringe one or more claims of the Asserted Patents, as set forth below.

IV. THE ASSERTED PATENTS AND NONTECHNICAL DESCRIPTIONS OF THE INVENTIONS

A. The ’209 Patent

i. Identification and Ownership of the ’209 Patent

32. Klein Tools owns by assignment U.S. Patent No. 11,713,209 titled “Glow Fish Tape System” (“the ’209 Patent”). The ’209 Patent issued August 1, 2023, naming Daniel R. Pearson as the inventor. A certified copy of the ’209 Patent is attached as Exhibit 2. A copy of the assignment history of the ’209 Patent is attached as Exhibit 5. A copy of the prosecution history of the ’209 Patent is attached as Appendix B.

ii. Expiration date for the ’209 Patent

33. The ’209 Patent expires on September 28, 2041.

iii. Foreign & Domestic Counterparts to the ’209 Patent

34. British Patent GB2591335B, titled “Glow Fish Tape System,” is a foreign patent corresponding to the ’209 Patent. It was filed on November 24, 2020, published as GB202018458D0 on January 6, 2021, published as GB2591335A on July 28, 2021, and granted and published as GB2591335B on February 21, 2024. Ex. 28. Australian Patent Application AU2020277134A1, titled “Glow Fish Tape System,” is a foreign patent application corresponding to the ’209 Patent. It was filed on November 24, 2020, and published on June 10, 2021. Ex. 29. The application is pending.

35. U.S. Patent No. 12,187,573 (the ’573 Patent), which issued January 7, 2025, is a continuation of the ’209 Patent. Ex. 3.

36. U.S. Patent Application No. 18/968,084 is an unpublished continuation of the ’573 Patent. The application is pending.

37. There are no other counterparts to the ’209 Patent that have been granted, pending, abandoned, denied, or withdrawn.

iv. Non-technical Description of the ’209 Patent

38. The ’209 Patent is related to fish tape technology. Fish tape can be used to guide wires through enclosed spaces such as walls or conduits. The invention of the ’209 Patent relates to, among other things, fish tape systems where the fish tape comprises luminescent material that can be energized while in the case.

v. Licensees to the ’209 Patent

39. There are no entities that have licenses under the ’209 Patent.

B. The ’573 Patent

i. Identification and Ownership of the ’573 Patent

40. Klein Tools owns by assignment U.S. Patent No. 12,187,573 titled “Glow Fish Tape System” (“the ’573 Patent”). The ’573 Patent issued January 7, 2025, naming Daniel R. Pearson as the inventor. A certified copy of the ’573 Patent is attached as Exhibit 3. A copy of the assignment history of the ’573 Patent is attached as Exhibit 6. A copy of the prosecution history of the ’573 Patent is attached as Appendix C.

ii. Expiration date for the ’573 Patent

41. The ’573 Patent expires on November 26, 2039.

iii. Foreign & Domestic Counterparts to the ’573 Patent

42. British Patent GB2591335B, titled “Glow Fish Tape System,” is a foreign patent corresponding to the ’573 Patent. It was filed on November 24, 2020, published as GB202018458D0 on January 6, 2021, published as GB2591335A on July 28, 2021, and granted

and published as GB2591335B on February 21, 2024. Ex. 28. Australian Patent Application AU2020277134A1, titled "Glow Fish Tape System," is a foreign patent application corresponding to the '573 Patent. It was filed on November 24, 2020, and published on June 10, 2021. Ex. 29. The application is pending.

43. The '573 Patent is a continuation of the '209 Patent, which issued on August 1, 2023. Ex. 2.

44. U.S. Patent Application No. 18/968,084 is an unpublished continuation of the '573 Patent. The application is pending.

45. There are no other counterparts to the '573 Patent that have been granted, pending, abandoned, denied, or withdrawn.

iv. Non-technical Description of the '573 Patent

46. The '573 Patent is related to fish tape technology. Fish tape can be used to guide wires through enclosed spaces such as walls or conduits. The invention of the '573 Patent relates to, among other things, fish tape systems where the fish tape comprises luminescent material that can be energized while in the case.

v. Licensees to the '573 Patent

47. There are no entities that have licenses under the '573 Patent.

C. The '327 Patent

i. Identification and Ownership of the '327 Patent

48. Klein Tools owns by assignment U.S. Patent No. 11,452,327 titled "Safety Helmet" ("the '327 Patent"). The '327 Patent issued September 27, 2022, naming Shantanu Deshpande and Kingston Wong as inventors. A certified copy of the '327 Patent is attached as Exhibit 1. A certified copy of the assignment history of the '327 Patent is attached as Exhibit 4. A certified copy of the prosecution history of the '327 Patent is attached as Appendix A.

49. The ’327 Patent claims the benefit of U.S. Provisional Patent Application Nos. 62/622,472 and 62/645/491, filed on January 26, 2018, and March 20, 2018, respectively. Copies of the file histories of these provisional applications are attached in Appendices D and E.

ii. Expiration Date for the ’327 Patent

50. The ’327 Patent expires on July 20, 2039.

iii. Foreign & Domestic Counterparts to the ’327 Patent

51. Canadian Patent Application CA3031264A1, titled “Safety Helmet,” is a foreign patent application corresponding to the ’327 Patent. Ex. 44. It was filed on January 24, 2019, and was published on July 26, 2019. The application is pending.

52. U.S. Patent No. 12,268,265 (the ’265 patent), which issued on April 8, 2025, is a continuation of the ’327 Patent. Ex. 61.

53. U.S. Patent Application 19/074,885 is an unpublished continuation of the ’265 Patent. The application is pending.

54. There are no other counterparts to the ’327 Patent that have been granted, pending, abandoned, denied, or withdrawn.

iv. Non-Technical Description of the ’327 Patent

55. The ’327 Patent is related to safety helmet technology. Safety helmets are commonly referred to as “hard hats.” ’327 Pat. at 1:16–17. The invention of the ’327 Patent relates to, among other things, safety helmet systems, including safety helmets, a category that includes hard hats, with an outer shell including a brim, a front receptacle, a rear receptacle, and accessory device(s) that are designed to be releasably mountable onto at least a portion of each of the front and rear receptacles.

v. Licensees to the ’327 Patent

56. There are no entities that have licenses under the ’327 Patent.

D. The ’265 Patent

i. Identification and Ownership of the ’265 Patent

57. Klein Tools owns by assignment U.S. Patent No. 12,268,265 titled “Safety Helmet” (“the ’265 Patent”). The ’265 Patent issued April 8, 2025, naming Shantanu Deshpande and Kingston Wong as inventors. A copy of the ’265 Patent is attached as Exhibit 61. A copy of the assignment history of the ’265 Patent is attached as Exhibit 62. A certified copy of the prosecution history of the ’265 Patent is attached as Appendix F.

58. The ’265 Patent claims the benefit of the ’327 Patent, filed on January 14, 2019, as well as U.S. Provisional Patent Application Nos. 62/622,472 and 62/645/491, filed on January 26, 2018, and March 20, 2018, respectively. Copies of the file histories of these provisional applications are attached in Appendices D and E.

ii. Expiration Date for the ’265 Patent

59. The ’265 Patent expires on May 3, 2039.

iii. Foreign & Domestic Counterparts to the ’265 Patent

60. The ’265 Patent is a continuation of the ’327 Patent.

61. Canadian Patent Application CA3031264A1, titled “Safety Helmet,” is a foreign patent application corresponding to the ’265 Patent. Ex. 44. It was filed on January 24, 2019, and was published on July 26, 2019. The application is pending.

62. U.S. Patent Application 19/074,885 is an unpublished continuation of the ’265 Patent. The application is pending.

63. There are no other counterparts to the ’265 Patent that have been granted, pending, abandoned, denied, or withdrawn.

iv. Non-Technical Description of the ’265 Patent

64. The ’265 Patent is related to safety helmet technology. *See* ¶ 55, *supra*.

v. Licensees to the ’265 Patent

65. There are no entities that have licenses under the ’265 Patent.

V. RESPONDENT’S UNLAWFUL AND UNFAIR ACTS

66. Respondent sells for importation, imports into the United States and/or sells in the United States after importation certain glow fish tape systems, safety helmet systems, and components thereof that infringe one or more claims of the Asserted Patents. Specific examples of infringing products imported into and sold within the United States by or on behalf of the Respondent are set forth below in detail.

A. Importation and Sale

67. Specific instances of importation and/or sale within the United States after importation of the Accused Products by Respondent are set forth below. These instances are exemplary in nature and not intended to restrict the scope of any remedial relief the International Trade Commission may order.

68. On information and belief, Respondent’s Accused Glow Fish Tape Systems are manufactured abroad. For example, a physical sample of Milwaukee’s 20’ Glow Fish Tape (48-22-4182) purchased in the United States on January 16, 2025, arrived with an attached information card indicating that the product was “Professionally Made in Taiwan.”

Ex. P2, Physical Exhibit of Milwaukee 20' Glow Fish Tape (48-22-4182); *see* Ex. 31, January 16, 2025, The Home Depot Order Confirmation for Milwaukee 20' Glow Fish Tape (48-22-4182).

69. On information and belief, components of Respondent's Accused Bolt System (including accessories designed for the system) are largely manufactured abroad. For example, a physical sample of Milwaukee BOLT™ REDLITHIUM™ USB Headlamp (2118-21) ordered on January 16, 2025, arrived in a box indicating that the headlamp was "Made in China."

Ex. P11, Physical Exhibit of Milwaukee BOLT™ REDLITHIUM™ USB Headlamp (2118-21); *see* Ex. 30, January 16, 2025, The Home Depot Order Confirmation for Milwaukee BOLT™ REDLITHIUM™ USB Headlamp (2118-21).

70. As further examples, the following BOLT System accessories and components were ordered on January 31, 2025, and were received in packaging indicating that they were manufactured abroad in China and/or Taiwan: BOLT Clear Uncoated Lens Task Full Face Shield (Model No. 48-73-1460) (Made in Taiwan), BOLT Task Full Face Shield Replacement Frame (Model No. 48-73-1461) (Taiwan), BOLT Clear Dual Coat Lens Eye Visor (Model No. 48-73-1410) (Made in Taiwan), BOLT Eye Visor Mount Replacement (Model No. 48-73-1458) (Taiwan), BOLT Yellow High Visibility Mesh Sunshade with 50+ UPF UV Protection (Model No. 48-73-1070) (Made in China), BOLT Tinted Brim Visor with High Visibility Yellow Mesh Sunshade and 360-Degree UV Protection (Model No. 48-73-1072) (Made in China), BOLT Tinted Brim Yellow High Visibility Visor with 360-Degree UV Protection (Model No. 48-73-1073) (Made in China). Ex. 60, January 31, 2025, The Home Depot Order Confirmation for Certain Milwaukee BOLT Accessories; Exs. P12–P18, Physical Samples of Accused Bolt System Accessories.

71. A physical sample of Milwaukee's BOLT™ Front Brim Hard Hat w/4pt Ratcheting Suspension (48-73-1200), ordered on January 16, 2025, arrived in packaging stating that it was "Made in USA with Global Materials," indicating that at least some of its components were imported. The 48-73-1200 Bolt hard hat includes in its packaging a hard hat, a 4-point suspension with ratcheting knob, a headlamp mount accessory, a strap for the headlamp mount accessory, instructions, and Milwaukee stickers.

Ex. P10, Physical Exhibit of Milwaukee BOLT™ Front Brim Hard Hat w/4pt Ratcheting Suspension (48-73-1200); *see* Ex. 45, January 16, 2025, The Home Depot Order Confirmation for Milwaukee BOLT™ Front Brim Hard Hat w/4pt Ratcheting Suspension (48-73-1200).

72. On information and belief, after manufacture abroad, the Accused Products or their components are then imported into the United States and/or sold within the United States after importation by Respondent.

73. For example, an import search run on the Milwaukee Accused Glow Fish Tape Systems indicates that "Fish Tape" with "HS Code 701990" and "Carrier Name: Maersk A/S Mas Ter" was imported from Pusan, South Korea with Milwaukee as consignee, arriving in a port in Los Angeles, California on July 25, 2024. *See* Ex. 46.

74. An import search run on the Milwaukee Accused BOLT System and its components indicates that "Headlamp Bracket" with "HS Code: 3926.90/7326.90 / 6506.91/8513.90" was imported from Kaohsiung, Taiwan with Milwaukee as consignee, arriving in a port in Savannah, Georgia on October 2, 2022. *See* Ex. 46.

75. On information and belief, the Accused Products are sold after importation within the United States by and for Milwaukee. For example, Milwaukee's website advertises that it "partners with a network of authorized distribution partners across the United States." Ex. 32, Milwaukee, *Buy Now*. Milwaukee lists on its website several U.S. retailers for the Accused Glow Fish Tape Systems, including The Home Depot, Acme Tools, Zoro.com, and Ohio Power Tool. Ex. 33, Milwaukee, *20' Glow Fish Tape (48-22-4182), Where to Buy*. Milwaukee also lists on its website several U.S. retailers for the Accused Bolt System, including The Home Depot, Acme Tools, ToolUp, Zoro.com, Grainger, and Ohio Power Tool. Ex. 34, Milwaukee, *48-73-1200, Where to Buy*. On information and belief, Milwaukee sells the Accused Glow Fish Tape Systems and the Accused Bolt System and components thereof in the United States after importation to such U.S. retailers.

76. Milwaukee's U.S. distribution partners sell the Accused Products to consumers. For example, on January 16, 2025, an order was placed online with The Home Depot for 2 samples of Milwaukee's 20' Glow Fish Tape (48-22-4182) to be sent to Washington, D.C. Ex. 31, January 16, 2025, The Home Depot Order Confirmations for Milwaukee 20' Glow Fish Tape (48-22-4182). That same day, an order was placed online with The Home Depot for 2 samples each of Milwaukee's BOLT™ Front Brim Hard Hat w/4pt Ratcheting Suspension (48-73-1200) and BOLT™ REDLITHIUM™ USB Headlamp (2118-21) to be sent to Washington, D.C. Exs. 30 and 45, January 16, 2025 The Home Depot Order Confirmations for BOLT™ Front Brim Hard

Hat w/4pt Ratcheting Suspension (48-73-1200) and BOLT™ REDLITHIUM™ USB Headlamp (2118-21).

B. Direct Infringement

i. The ’209 Patent

77. The Accused Glow Fish Tape Systems directly infringe, literally and/or under the doctrine of equivalents, claims 6, 8–9, 11, and 14–17 of the ’209 Patent (“the Asserted ’209 Claims”). Respondent directly infringes these claims under 35 U.S.C. § 271(a) by using, offering to sell, importing, testing, and/or selling after importation into the United States the Accused Glow Fish Tape Systems. On information and belief, Respondent imports into the United States and/or sells after importation the Accused Glow Fish Tape Systems.

78. A claim chart comparing asserted independent claims 6 and 14 of the ’209 Patent to a representative Accused Glow Fish Tape System is attached as Exhibit 9.

ii. The ’573 Patent

79. The Accused Glow Fish Tape Systems directly infringe, literally and/or under the doctrine of equivalents, claims 1–2, 4, 6–8, 10, and 14–17 of the ’573 Patent (“the Asserted ’573 Claims”). Respondent directly infringes these claims under 35 U.S.C. § 271(a) by using, offering to sell, importing, testing, and/or selling after importation into the United States the Accused Glow Fish Tape Systems. On information and belief, Respondent imports into the United States and/or sells after importation the Accused Glow Fish Tape Systems.

80. A claim chart comparing asserted independent claims 1, 6, and 14 of the ’573 Patent to a representative Accused Glow Fish Tape System is attached as Exhibit 10.

iii. The ’327 Patent

81. The Accused Bolt System directly infringes, literally and/or under the doctrine of equivalents, claims 1, 3–7, 8, 10–11, 13–15, 16, and 17 of the ’327 Patent (“the Asserted ’327

Claims"). Respondent directly infringes these claims under 35 U.S.C. § 271(a) by making, using, offering to sell, importing, testing, and/or selling after importation into the United States the Accused Bolt System. On information and belief, Respondent imports into the United States and/or sells after importation the Accused Bolt System.

82. A claim chart comparing asserted independent claims 1, 8, 16, and 17 of the '327 Patent to a representative product of the Accused Bolt System is attached as Exhibit 8.

iv. The '265 Patent

83. The Accused Bolt System directly infringes, literally and/or under the doctrine of equivalents, claims 1–4 of the '265 Patent ("the Asserted '265 Claims"). Respondent directly infringes these claims under 35 U.S.C. § 271(a) by making, using, offering to sell, importing, testing, and/or selling after importation into the United States the Accused Bolt System. On information and belief, Respondent imports into the United States and/or sells after importation the Accused Bolt System.

84. A claim chart comparing asserted independent claim 1 of the '265 Patent to a representative product of the Accused Bolt System is attached as Exhibit 63.

C. Indirect Infringement

i. The '209 and '573 Patents

85. On information and belief, Respondent directly infringes the Asserted '209 and '573 Claims at least through using, offering to sell, importing, testing, and/or selling after importation into the United States the Accused Glow Fish Tape Systems. Further, on information and belief, Respondent indirectly infringes the Asserted '209 and '573 Claims, at least by inducing others to directly infringe the claimed inventions in the United States.

86. On information and belief, Respondent has actively and knowingly induced, and continues to induce, direct infringement of the Asserted '209 and '573 Claims at least by its

customers and/or end users with the specific intent that such customers' and/or end users' acts infringe the Asserted '209 and '573 Claims.

87. Respondent has had actual knowledge of the Asserted '209 and '573 Patents since at least the date of filing and service of the related district court complaint (*see* § VII*, infra*), and no later than the filing and service of the original complaint.[4]

88. On information and belief, Respondent actively induces others to infringe the Asserted '209 and '573 Claims at least through its sale of, advertisements for, and product literature for the Accused Glow Fish Tape Systems to customers in the United States.

89. For example, The Home Depot sells the Accused Glow Fish Tape Systems in the United States:

[4] Concurrently with the filing of the original complaint, the complaint and non-confidential copies of the Exhibits to the Complaint were provided to Respondent at the mailing addresses herein identified on the front cover.

Ex. 35, The Home Depot, *Milwaukee 20 ft. Glow Fish Tape*. Milwaukee lists on its website other U.S. retailers for the Accused Glow Fish Tape Systems, including Acme Tools, Zoro.com, and Ohio Power Tool. Ex. 33, Milwaukee, *20' Glow Fish Tape (48-22-4182), Where to Buy*.

90. On information and belief, Respondent creates and distributes promotional and product literature for the Accused Glow Fish Tape Systems that is designed to instruct, encourage, enable, and facilitate the use, sale, and offer for sale of the Accused Glow Fish Tape Systems in a manner that directly infringes the Asserted '209 and '573 Claims.

91. For example, Milwaukee advertises the Accused Glow Fish Tape Systems as "deliver[ing] easier fishing and bright glow in low light applications," "[t]he open slots throughout the case allow[ing] light to easily charge the tape resulting in a bright glow in the dark":

48-22-4182

20' Glow Fish Tape

★★★★★ (0)

Our 20' Glow Fish Tape delivers easier fishing and bright glow in low light applications . A low-friction case delivers a smooth payout and easy rewind. The open slots throughout the case allow light to easily charge the tape resulting in a bright glow in the dark. The fish tape features a multi-position handle providing comfortable use in multiple scenarios. The non-conductive tape allows for safely handling wire and cable in electrical applications and the compact size allows for easy storage and transportation on and off the jobsite.

Ex. 20, Milwaukee, *20' Glow Fish Tape* (Cropped and Highlighted).

92. Milwaukee further advertises "key features" of the Accused Glow Fish Tape Systems as including "Bright glow in the dark," "Low friction case for smooth payout," "Multi-position handle," and "Open slots for easy recharging":

KEY FEATURES | SPECIFICATIONS | REVIEWS

- ☑ Low friction case for smooth payout
- ☑ Multi-position handle
- ☑ Square inner grip for easier winding
- ☑ Open slots for easy recharging
- ☑ 20' Length
- ☑ Bright glow in the dark
- ☑ Non-conductive
- ☑ Slim tip for easy feeding
- ☑ Coating protects against splinters

Id. (Cropped and Highlighted).

93. Likewise, the information card that comes attached to Milwaukee's 20' Glow Fish Tape highlights these same product features, among others:

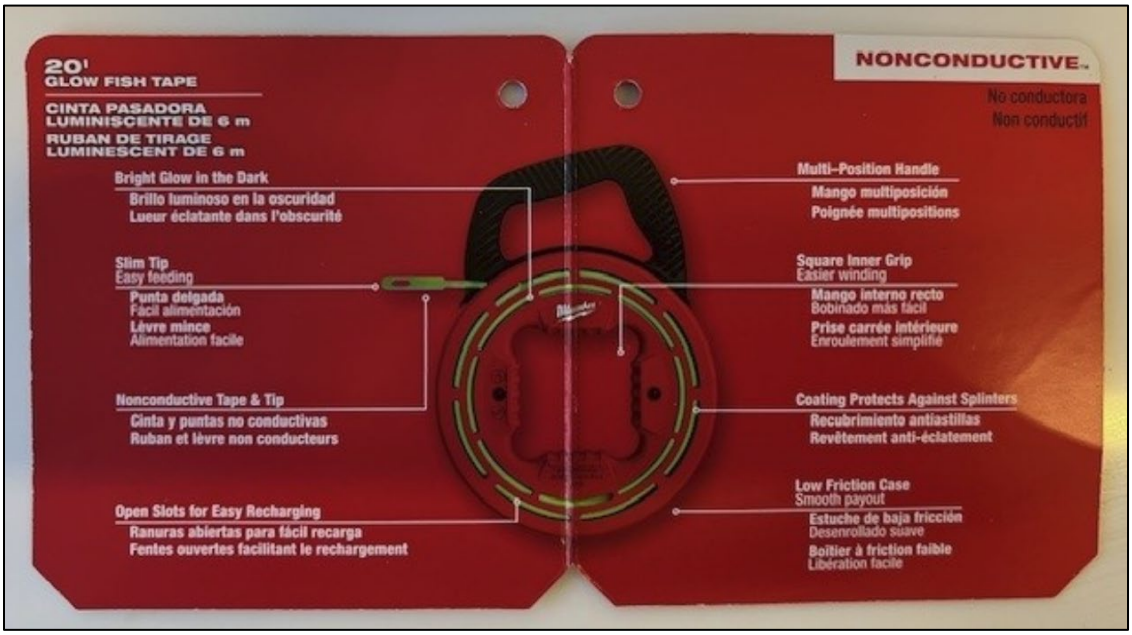

Ex. 36, Milwaukee 20' Glow Fish Tape Information Card at 2-3; Ex. P2, Physical Exhibit of Milwaukee 20' Glow Fish Tape (48-22-4182).

94. On information and belief, Respondent provides such promotional materials advertising the Accused Glow Fish Tape Systems and supports its distributors in selling and offering to sell the Accused Glow Fish Tape Systems. *See, e.g.*:

Ex. 36, Milwaukee 20' Glow Fish Tape Information Card at 1.

Ex. 20, Milwaukee, *20' Glow Fish Tape* (Cropped).

95. Respondent induces such infringing acts and, on information and belief, knew that its actions would induce direct infringement of the Asserted '209 and '573 Patents, or acted with willful blindness.

96. Respondent has had actual knowledge of the Asserted '209 and '573 Patents and, on information and belief, actual knowledge that its actions induce patent infringement since at

least the filing and service of the related district court complaint (*see* § VII*, infra*), and no later than the filing and service of the original complaint.

97. Respondent's knowledge of infringement of the Asserted '209 and '573 Patents, and its continued sale, offer for sale, and/or importation of the Accused Glow Fish Tape Systems constitutes infringement as well as active inducement of others to infringe the Asserted '209 and '573 Patents.

ii. The '327 and '265 Patents

98. On information and belief, Respondent directly infringes the Asserted '327 and '265 Claims at least through making, using, offering to sell, importing, testing, and/or selling after importation into the United States the Accused Bolt System. Further, on information and belief, Respondent indirectly infringes the Asserted '327 and '265 Claims, at least by inducing others to directly infringe the claimed inventions in the United States.

99. On information and belief, Respondent has actively and knowingly induced, and continues to induce, direct infringement of the Asserted '327 and '265 Claims at least by its customers and/or end users with the specific intent that such customers' and/or end users' acts infringe the Asserted '327 and '265 Claims.

100. On information and belief, Respondent has had actual knowledge of the application that issued as the '327 Patent since at least October 29, 2020, when Respondent filed an Information Disclosure Statement with the USPTO listing the '327 Patent application (then-U.S. Pre-Grant Publication No. 2019/0231016, "Deshpande") as prior art with the initial filing materials of Milwaukee's U.S. Patent Application No. 17/084,303 (issued as U.S. Patent No. 11,019,870, "Hard Hat Lamp Attachment System").

101. On information and belief, Respondent has also had actual knowledge of the application that issued as the '327 Patent since at least August 30, 2021, when Respondent filed

an Information Disclosure Statement with the USPTO listing the ’327 Patent application (then-U.S. Pre-Grant Publication No. 2019/0231016, “Deshpande”) as prior art with the initial filing materials of Milwaukee’s U.S. Patent Application No. 17/461,163 (published as U.S. 2022/0047033, “Hard Hat Attachment System and Sun Visor”).

102. On information and belief, Respondent has also had actual knowledge of the application that issued as the ’327 Patent since at least March 31, 2022, when Respondent filed an Information Disclosure Statement with the USPTO listing the ’327 Patent application (then-U.S. Pre-Grant Publication No. 2019/0231016) as prior art with the initial filing materials of Milwaukee’s U.S. Patent Application No. 17/710,263 (published as U.S. 2022/0287403, “Safety Headwear Systems and Accessories”).

103. On information and belief, through competitive monitoring activities, Respondent has had actual knowledge of the ’327 Patent and its claims since at least about September 27, 2022, the day on which the ’327 Patent was issued.

104. On information and belief, Respondent has also possessed knowledge and understanding of the ’327 Patent and its claims since no later than January 24, 2024, when claims of Milwaukee’s U.S. Patent Application No. 17/461,163 (published as U.S. 2022/0047033) were rejected multiple times by the USPTO as unpatentable based on the issued ’327 Patent and other prior art in USPTO Office Actions dated January 24, 2024, April 30, 2024, and October 31, 2024.

105. On information and belief, Respondent has meaningfully engaged with the ’327 Patent and its claims during the course of the continuing prosecution of its U.S. Patent Application No. 17/461,163.

106. On information and belief, Respondent has also possessed knowledge and understanding of the ’327 Patent and its claims since no later than January 30, 2024, when the ’327

Patent was cited by the USPTO examiner during the prosecution of Milwaukee's U.S. Patent Application No. 17/710,263.

107. Respondent has had actual knowledge of the application that issued as the '265 Patent at least since the filing and service of the original complaint, when Complainant listed U.S. Patent Application 17/856,628 as a pending continuation of the '327 Patent. *See* § IV.C.iii, *supra*.

108. On information and belief, Respondent has had actual knowledge of the '265 Patent since it issued on April 8, and no later than April 9, as Complainant informed Respondent on April 7 of its intent to amend to add the '265 Patent to the original Complaint following its issuance on April 8, and the parties met and conferred regarding the same on April 9 following the '265 Patent's issuance.

109. On information and belief, Respondent has actively induced, and continues to induce, direct infringement of the Asserted '327 and '265 Claims at least by its customers and/or end users with the actual knowledge that such customers' and/or end users' acts infringe the Asserted '327 and '265 Claims.

110. For example, Respondent advertises its Accused Bolt System as providing the ability to "secure accessories simultaneously" and "use multiple accessories at once":

The Milwaukee® BOLT™ System allows you to secure accessories simultaneously. Built on the Milwaukee® BOLT™ Helmets and Hard Hats, this versatile system allows you to use multiple accessories at once. If the job changes, you can quickly swap out accessories, providing you protection and efficiency on the jobsite. The Milwaukee® BOLT™ System allows you to secure accessories simultaneously, so you can STAY SAFE. STAY PRODUCTIVE.™

Ex. 27, Head Protection – BOLT Overview, Milwaukee Tool (Cropped & Highlighted).

111. The ability to secure accessories, and secure multiple accessories simultaneously, is a key selling point listed prominently for the safety helmets and hard hats in the Accused Bolt System. *See, e.g.:*

BOLT™ Front Brim Hard Hat w/4pt Ratcheting Suspension (USA) Front-Brim-Hard-Hat-w4pt-Ratcheting-Suspension-USA

- Adapt To Your Jobsite
- Includes a BOLT™ Headlamp Mount that works with most headlamps
- 6 Accessory Slots for Quick Access
- Ratcheting Suspension - Quickly Adjust
- Moisture Wicking Sweatband to Stay Cool and Dry Fast
- Includes a BOLT™ Marker Clip for easy access to pens and markers
- Secure Accessories Simultaneously - BOLT™ Head Protection and Accessories
- Cushioned Ratchet and Crown Pads
- Largest Ratcheting Adjustment Range
- Made in USA With Global Materials
- ANSI/ISEA Z89.1 Type 1 Class C
- CSA Z94.1 Type 1 Class C
- UL Third-Party Tested and Certified
- Includes a Milwaukee logo decal and Identification Stickers

Learn More

Ex. 27, Milwaukee Tool - Head Protection - Bolt Overview (Hard Hat) (Highlighted).

112. Bolt accessories, like the BOLT™ REDLITHIUM™ USB Headlamp, are advertised as "a dedicated solution for [Respondent's] BOLT™ hats and helmets":

BOLT™ REDLITHIUM™ USB Headlamp

★★☆☆☆ 2.3 (7) Write a review

Our BOLT™ REDLITHIUM™ Headlamp is a dedicated solution for our BOLT™ hard hats and helmets and is fully compatible with all BOLT™ accessories. Powered by REDLITHIUM™ USB this headlamp provides HIGH OUTPUT™ lighting that stays brighter for longer. The MILWAUKEE® BOLT™ headlamp offers an ultra-thin light head that allows for full functionality of any BOLT™ Face shield and visor. The headlamp delivers 600 lumens of TRUEVIEW™ High Definition Flood Lighting paired with a 70° pivoting light head for full illumination for any task. Our rechargeable headlamp is designed with the cam lock mounted battery pack in the rear for maximum maneuverability and security in tight spaces and a balanced design for all-day use. The Milwaukee headlamp has four light output modes: High, Medium, Low, and Eco for 32 hours of runtime to maximize light output or extend runtime. The light is IP54 rated for water and dust resistance and can withstand up to 2M drops, surviving the toughest conditions on and off the jobsite. The MILWAUKEE® REDLITHIUM™ USB Battery can be recharged in the headlamp via USB-C or swapped out with additional REDLITHIUM™ USB Batteries for virtually no downtime. The BOLT™ Headlamp is covered by a limited lifetime warranty.

Ex. 37, Milwaukee 2118-21 Product Page & Images (Highlighted).

113. Additional headlamp mount devices are sold and included in the Bolt System that are designed to allow "users to Secure Accessories Simultaneously":

48-73-1094

BOLT™ Low-Profile Headlamp Mount

1.0 (4)

Our BOLT™ Low-Profile Headlamp Mount allows headlamp compatibility with BOLT™ eye visors and select BOLT™ full face shields. The mount is reversible and secures into the Front or Rear BOLT™ Mount of your MILWAUKEE® head protection for added convenience. The BOLT™ Low-Profile Headlamp Mount works with Milwaukee and most other professional brand headlamps. All MILWAUKEE® safety helmets and hard hats are BOLT™ compatible. This low-profile headlamp mount is part of the BOLT™ accessory system which allows users to Secure Accessories Simultaneously.

Close

Where To Buy

Ex. 38, Milwaukee 48-73-1094 Product Page & Images (Highlighted); Ex. 39, Grainger Listing for Hard Hat Headlamp Mount (48-73-1090).

114. On information and belief, Respondent actively induces others to infringe the Asserted '327 and '265 Claims at least through its sale of, advertisements for, and instructions for the Accused Bolt System to customers in the United States.

115. For example, The Home Depot sells the Accused Bolt System in the United States:

Milwaukee

BOLT White Type 1 Class C Front Brim Vented Hard Hat w/4 Point Ratcheting Suspension w/600 Lumens Rechargeable Headlamp

(143) Questions & Answers (15)

Ex. 40, BOLT™ Front Brim Hard Hat w/ Rechargeable Headlamp (48-73-1200-2118-21), The Home Depot. Respondent lists on its website other U.S. retailers for the Accused Bolt System including Acme Tools, ToolUp, Zoro.com, Grainger, and Ohio Power Tool. Ex. 34, 48-73-1200, Where to Buy, Milwaukee Tool.

116. Reviews on Respondent's website show that it has induced its customers to infringe the Asserted '327 and '265 Claims through the sale of, advertisements for, and instructions for the Accused Bolt System to consumers in the United States. *See, e.g.*:

vinceg

La Verne, CA

Skill Level: **Professional**

★★★★★

The headlamp system works great on BOLT hardhats!

5 months ago

I am not sure what the one star review people are talking about with respect to the cord being too short. I bought this USB headlamp for my BOLT hardhat and the light clipped onto the front of my hardhat perfectly. The battery clipped on to the back of the helmet perfectly. And the cord between the light and the battery reaches around the side of the hardhat perfectly. Just like the picture on the Milwaukee website. The light has worked great and the battery will last most of the day on medium setting. Maybe they are not using the BOLT type hardhat.

Yes, I recommend this product.

Helpful? (6) (0) Report

Ex. 37, Milwaukee 2118-21 Product Page, Reviews (Highlighted);

Mickey C.

Pa.

Skill Level: **Professional**

★★★★★

Perfect

4 years ago

Safety , Comfortable , Impressive looking , Marker Holder excellent location , Led head lamp is the finishing add on

Yes, I recommend this product.

Originally posted on Front Brim Hard Hat w/4pt Ratcheting Suspension

Helpful? (2) (0) Report

Ex. 41, 48-73-1200 Product Page, Reviews (Highlighted);

ASC802

Burlington, Vermont

Skill Level: **Professional**

★★★☆☆

Mixed Feelings

4 years ago

I've had the full brim hard hat for 3 days now and it's really comfortable but the ratchet always seems to loosen up. Working in the Plumbing field and working up in the floor joist if you press the hard hat against anything it loosens up and having my light in the front makes the hard hat fall off and it's really frustrating. Granted it's super comfortable I won't buy again unless they upgrade the ratchet... And that's very hard for me to say considering every tool I own is Milwaukee..

Q: Tool Serial Number (If Applicable):

A: 50-73-1010

No, I do not recommend this product.

Originally posted on Full Brim Vented Hard Hat with BOLT™ Accessories – Type 1 Class C

Helpful? (3) (0) Report

Ex. 42, Full Brim Hard Hat w/ 4pt Ratcheting Suspension Product Page, Reviews (Highlighted).

117. On information and belief, Respondent creates and distributes promotional and product literature for the Accused Bolt System that is designed to instruct, encourage, enable, and facilitate the use, sale, and offer for sale of the Accused Bolt System in a manner that directly infringes the Asserted ’327 and ’265 Claims.

118. For example, the Operator’s Manual for Milwaukee’s USB Headlamp demonstrates an exemplary use of Milwaukee’s infringing Accused Bolt System. *See, e.g.*:

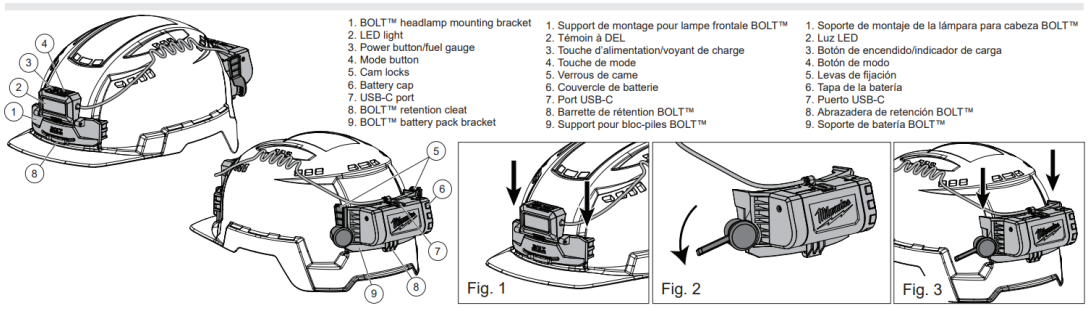

Ex. 43, 58-22-0146d1 (Milwaukee USB Headlamp Operator’s Manual);

Assembly

⚠CAUTION **To reduce the risk of injury, do not look directly into the light when the light is on.**

1. Slide the BOLT™ headlamp mounting bracket onto the front of the hard hat/helmet until it clicks into place, as shown in Fig. 1.
2. Open the cam locks on the rear BOLT™ battery pack, as shown in Fig. 2.
3. Slide the rear BOLT™ battery pack bracket onto the rear of the hard hat/helmet, as shown in Fig. 3.
4. Close the cam locks on the rear BOLT™ battery pack to secure and ensure both brackets engage the retention cleat of the hard hat/helmet.

Id. (Highlighted).

119. On information and belief, Respondent provides such promotional materials advertising the Accused Bolt System and supports its distributors in selling and offering to sell the Accused Bolt System. *See, e.g.*:

Ex. 42, BOLT™ Full Brim Hard Hat w/4pt Ratcheting Suspension (USA) Product Page & Images;

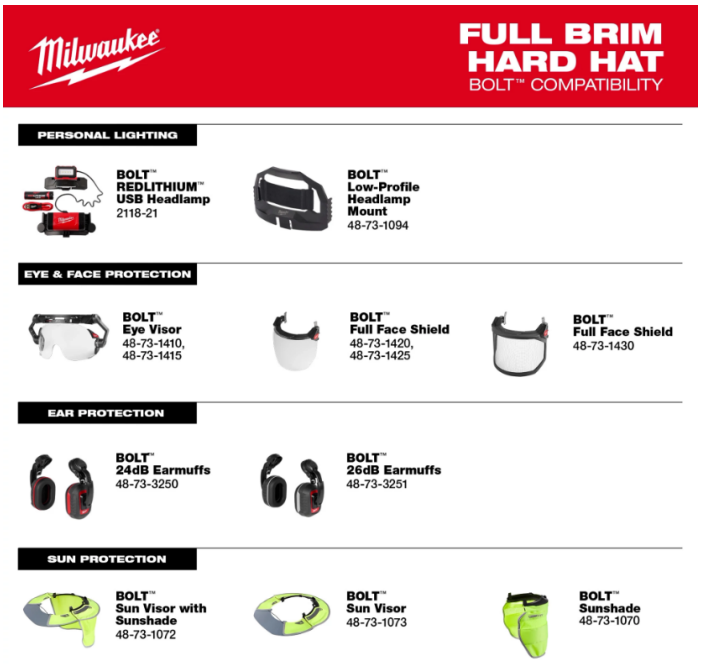

Id.;

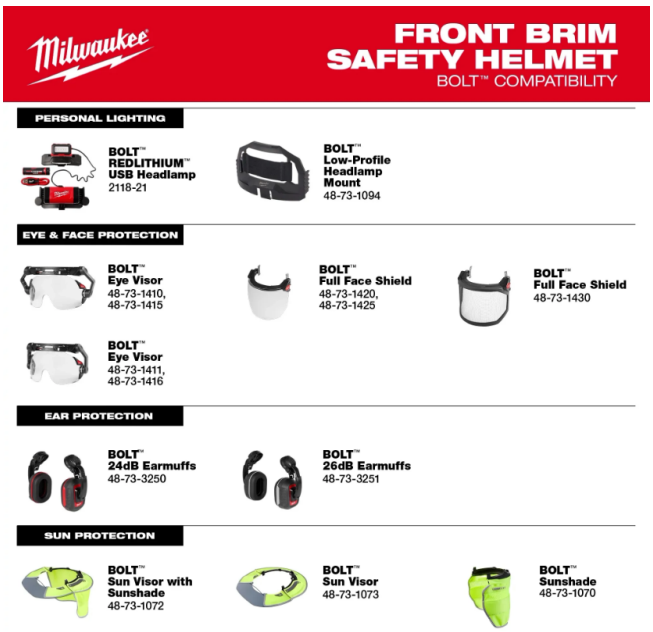

Ex. 49, BOLT™ Front Brim Safety Helmet with IMPACT ARMOR™ Liner Product Page & Images;

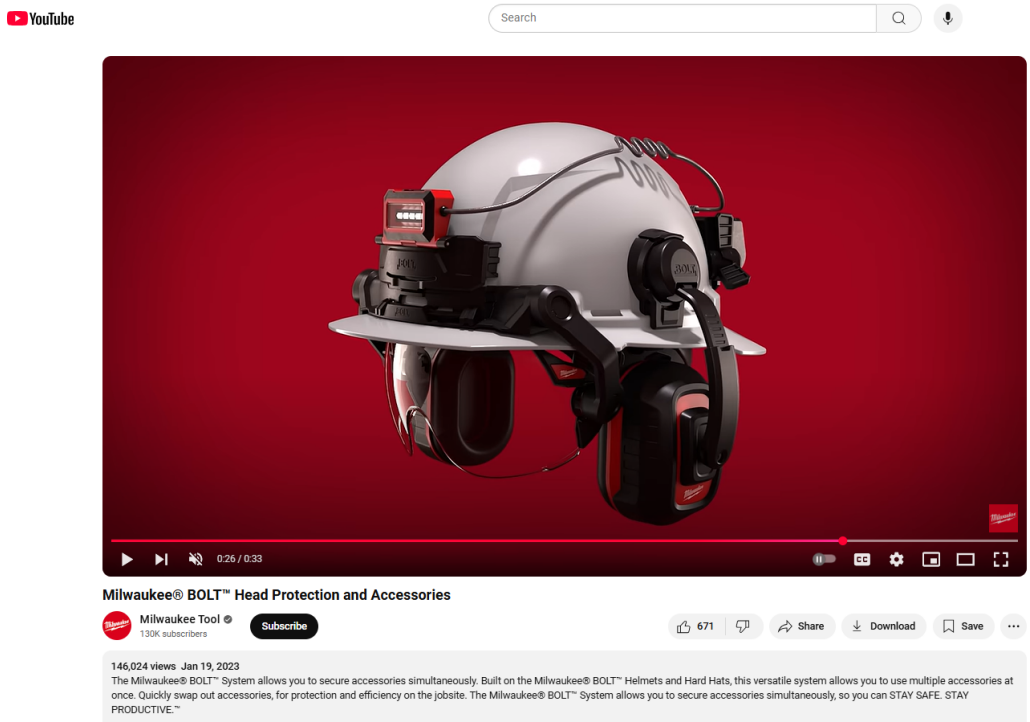

Ex. 50, Milwaukee® BOLT™ Head Protection and Accessories, https://www.youtube.com/watch?v=ZO5rF2p0rWQ.

120. Respondent induces such infringing acts and, on information and belief, knows that its actions would induce direct infringement of the ’327 and ’265 Patents, or acted with willful blindness.

121. Respondent has had actual knowledge of the Asserted ’327 Patent and, on information and belief, actual knowledge that its actions induce patent infringement since at least the date of filing and service of the related district court complaint (*see* § VII, *infra*), and no later than the filing and service of the original complaint.

122. Respondent has had actual knowledge of the ’265 Patent and, on information and belief, actual knowledge that its actions induce patent infringement since at least the filing and service of this Amended Complaint.

123. Respondent's knowledge of infringement of the Asserted '327 and '265 Patents, and its continued sale, offer for sale, and/or importation of the Accused Bolt System constitutes infringement as well as active inducement of others to infringe the Asserted '327 and '265 Patents.

VI. CLASSIFICATION OF THE INFRINGING PRODUCTS UNDER THE HARMONIZED TARIFF SCHEDULE

124. On information and belief, the Harmonized Tariff Schedule of the United States item numbers under which the infringing glow fish tape systems, safety helmet systems, and components thereof may be imported into the United States includes at least HTSUS 3926.90, 6506.10, 6506.91, 7019.90, 8507.60, 8513.10, and 8513.90. This classification is exemplary in nature and not intended to restrict the scope of any exclusion order or other remedy ordered by the Commission.

VII. RELATED PROCEEDINGS

125. On February 4, 2025, Klein Tools, Inc. filed a complaint in the United States District Court for the District of Delaware against Respondent for infringement of the Asserted '209, '573, and '327 Patents. The docket number of the Delaware litigation is 1:25-cv-00143-UNA. On March 28, 2025, the Delaware court stayed the district court litigation pending resolution of this Investigation. Klein Tools has not asserted the '265 Patent in the Delaware litigation, or elsewhere, against Milwaukee or otherwise. The alleged unfair acts, or the subject matter thereof, have not been the subject of any other court or agency litigation, or of any arbitration.

VIII. THE DOMESTIC INDUSTRY

126. An industry exists in the United States relating to the Asserted Patents and articles protected by the Asserted Patents, as described herein.

A. Klein Tools' Articles that Practice the Asserted Patents (Technical Prong)

127. Certain of Klein Tools' products practice at least one claim of each Asserted Patent, as follows:

U.S. Patent No.	Domestic Industry Products
11,713,209 & 12,187,573	Klein Tools Glow Fish Tape Systems ("'209 and '573 DI Products"); exemplary model 50550 20' glow fish tape shown below:

U.S. Patent No.	Domestic Industry Products
11,452,327 & 12,268,265	Klein Tools Safety Helmet System ("'327 and '265 DI Products"); (exemplary model 60407 vented full brim hard hat with headlamp shown below):

128. Claim charts demonstrating that representative Klein Tools '209, '573, '327, and '265 DI Products practice an exemplary claim of each of the Asserted Patents are attached as Exhibits 11-13, and 64.[5]

B. United States Economic Activities Relating to the Domestic Industry Products and the Asserted Patents (Economic Prong)

129. A domestic industry exists under 19 U.S.C. § 1337(a)(3), comprised of Klein Tools' domestic investments related to the '209, '573, '327, and '265 DI Products and Klein Tools'

[5] The Klein Tools '209, '573, '327, and '265 DI Products practice more claims than the claims charted in Exhibits 11-13, and 64. Complainant may demonstrate satisfaction of the technical prong through other claims of the Asserted Patents.

exploitation of the Asserted Patents. As described below, Klein Tools develops and manufactures the DI Products in the United States.

130. Klein Tools' domestic operations include product design, research and development, manufacturing, testing and qualification, operations, sales, marketing, logistics and customer service related to the DI Products and exploitation of the Asserted Patents. Klein Tools has made significant domestic investments in plant and equipment and the employment of labor and capital relating to the DI Products, and has made substantial investments in the exploitation of the Asserted Patents.

131. Klein Tools has been manufacturing tools in the United States since 1857 and has been continually investing in its product development and manufacturing capabilities in the U.S. as it has grown its product lines. Throughout its history, Klein Tools has continuously made significant investments to increase its U.S. manufacturing capabilities.

132. Klein Tools operates manufacturing plants in Mansfield, Texas; Elk Grove Village, Illinois; Fort Smith, Arkansas; and Bolivar, New York.

133. Klein Tools also develops its products domestically – even those that it ultimately sources from abroad. Klein Tools primarily conducts research and development from its headquarters facility in Lincolnshire, Illinois and its manufacturing facility in Mansfield, Texas.

134. The DI Products were developed by Klein Tools engineers and technicians in Mansfield, Texas and Lincolnshire, Illinois and are manufactured by skilled laborers at Klein Tools' factory in Mansfield, Texas.[6] The Confidential Declarations of John Hankus set forth

[6] As discussed in more detail in John Hankus' confidential declaration, Klein Tools sources portions of the '327 and '265 DI Products from abroad and manufactures portions of them domestically.

details regarding exemplary domestic investments in plant, equipment, labor and capital relating to its domestic development and manufacture of the DI Products. *See* Exhibits 14, 14A.[7]

135. Klein Tools also invests in the exploitation of the Asserted Patents through research, development, and engineering activities in the United States at its Lincolnshire, Illinois and Mansfield, Texas facilities. The inventions described in the Asserted Patents led to the commercial development of the DI Products, which embody the patented features, and are responsible for their commercial success.

136. Klein Tools' investments and expenditures related to the DI Products are significant and substantial at least because all of the development activities related to the DI Products takes place in the United States, the DI Products embody the Asserted Patents, all of the manufacturing of the '209 and '573 DI Products occurs domestically, and a significant portion of the manufacturing of the '327 and '265 DI Products takes place in the United States, utilizing significant levels of US capital, labor and raw materials. Moreover, Klein Tools' substantial domestic R&D and engineering of the DI Products relates directly to the exploitation of the Asserted Patents. Klein Tools' domestic expenditures are necessary for development, manufacturing and commercialization of the DI Products.

[7] Klein Tools incorporates the supplement to this paragraph contained in its letter dated March 3, 2025. Letter from P. Brinkman to Secretary Barton (EDIS Doc. ID 844785).

IX. RELIEF REQUESTED

137. Complainant respectfully requests that the Commission:

(a) Institute an investigation pursuant to Section 337 of the Tariff Act of 1930, as amended, 19 U.S.C. § 1337, with respect to the Respondent's violations of that section arising from the importation into the United States and/or the sale within the United States after importation of Certain Glow Fish Tape Systems, Safety Helmet Systems, and Components Thereof that infringe one or more claims of the Asserted Patents;

(b) Schedule and conduct a hearing pursuant to Section 337(c) for the purposes of: (i) receiving evidence and hearing argument concerning whether there has been a violation of Section 337; and (ii) following the hearing, determining that there has been a violation of Section 337;

(c) Issue a permanent limited exclusion order directed to products manufactured, designed, offered for sale, and/or sold by the Respondent, its subsidiaries, related companies, and/or agents pursuant to 19 U.S.C. § 1337(d), excluding entry into the United States of Certain Glow Fish Tape Systems, Safety Helmet Systems, and Components Thereof that infringe one or more claims of the Asserted Patents;

(d) Issue permanent cease and desist orders pursuant to 19 U.S.C. § 1337(f) prohibiting the Respondent, its subsidiaries, related companies, agents, and/or other affiliates from conducting any of the following activities in the United States: importing, selling, marketing, advertising, distributing, offering for sale, transferring (except for exportation), soliciting United States agents or distributors, or aiding and abetting other entities in the importation, sale for importation, sale after importation, transfer (except for exportation), or distribution of Certain Glow Fish Tape Systems, Safety Helmet Systems, and Components Thereof that infringe one or more claims of the Asserted Patents;

(e) Impose a bond upon importation, sale, or transfer of Certain Glow Fish Tape Systems, Safety Helmet Systems, and Components Thereof that infringe one or more claims of the Asserted Patents during the 60-day review period pursuant to 19 U.S.C. § 1337(j); and

(f) Issue other and further relief as the Commission deems just and proper under the law, based on the facts determined by the investigation and the authority of the Commission.

Dated: April 11, 2025

Respectfully submitted,

/s/ Paul F. Brinkman, P.C.

Paul F. Brinkman, P.C.
Kirkland & Ellis LLP
1301 Pennsylvania Avenue, N.W.
Washington, D.C. 20004
Telephone: (202) 389-5000
Facsimile: (202) 389-5200
Email: paul.brinkman@kirkland.com

Gregory S. Arovas, P.C.
Ryan Kane, P.C.
Alan Rabinowitz
Jae Hyun Kim
Robert Endrizzi
Kirkland & Ellis LLP
601 Lexington Avenue
New York, NY 10022
Telephone: (212) 446-4800
Facsimile: (212) 446-4900
Email: greg.arovas@kirkland.com
Email: ryan.kane@kirkland.com
Email: alan.rabinowitz@kirkland.com
Email: jaehyun.kim@kirkland.com
Email: robert.endrizzi@kirkland.com

Counsel for Complainant Klein Tools, Inc.

CERTIFICATE OF SERVICE

I, Robert Leonard, hereby certify that on May 5, 2025, copies of the foregoing document was filed and served upon the following parties as indicated:

Lisa R. Barton Secretary to the Commission U.S. International Trade Commission 500 E Street, S.W., Room 112 Washington, D.C. 20436	☐ Via First Class Mail ☐ Via Hand Delivery ☐ Via Express Delivery ☒ Via Electronic Filing (EDIS)
Hon. Clark S. Cheney Chief Administrative Law Judge U.S. International Trade Commission 500 E Street, S.W. Washington, D.C. 20436 Cheney1442@usitc.gov	☐ Via First Class Mail ☐ Via Hand Delivery ☐ Via Express Delivery ☒ Via Electronic Mail ☒ Via BOX

On Behalf of Respondents Milwaukee Electric Tool Corporation

Scott D. Sherwin Morgan, Lewis & Bockius LLP 110 North Wacker Drive, Suite 2800 Chicago, IL 60606 Email: scott.sherwin@morganlewis.com Email: MLB-MilwaukeeTools-ITC@morganlewis.com	☐ Via First Class Mail ☐ Via Hand Delivery ☐ Via Express Delivery ☒ Via Electronic Mail

/s/ Robert Leonard
Robert Leonard, Case Manager
Kirkland & Ellis LLP