UNITED STATES PATENT AND TRADEMARK OFFICE

BEFORE THE PATENT TRIAL AND APPEAL BOARD

IMPERATIVE CARE, INC.,
Petitioner,

v.

INARI MEDICAL, INC.,
Patent Owner.

Patent No. 11,844,921

DECLARATION OF TROY L. THORNTON IN SUPPORT OF PETITION FOR *INTER PARTES* REVIEW OF U.S. PATENT NO. 11,844,921

Imperative Care v. Inari Medical
US Patent 11,844,921
Imperative Care Ex. 1003

TABLE OF CONTENTS

Page No.

I. INTRODUCTION 1

A. Engagement 1

B. Experience and Qualifications 2

C. Topics of Opinions 4

D. Materials Considered 5

II. APPLICABLE LEGAL STANDARDS 5

A. Claim Construction 6

B. Anticipation 7

C. Obviousness 7

D. Person of Ordinary Skill in the Art 11

III. THE ’921 PATENT 12

A. Summary of the ’921 Patent 12

B. The Challenged Claims 18

C. Prosecution History 19

IV. CLAIM CONSTRUCTION 19

A. The Board’s Institution Decision from the ’011 Patent IPR 20

B. Construction of “Filament” 23

V. SUMMARY OF IPR GROUNDS 26

TABLE OF CONTENTS
(*cont'd*)

Page No.

VI. GROUNDS 1-4: CLAIMS 1-7, 9-10, 15-18, 20-24 ANTICIPATED BY SCHAFFER OR OBVIOUS OVER SCHAFFER ALONE OR IN COMBINATION WITH HARTLEY OR ELLER 26

A. Claim 1 31

1. Preamble 31

2. Elongate Member 32

3. Tensioning Mechanism 33

4. Biasing Member 70

B. Claim 2 72

C. Claim 3 72

1. Schaffer 72

2. Hartley 74

3. Eller 76

D. Claim 4 77

E. Claim 5 80

1. Schaffer 81

2. Hartley 87

3. Eller 88

F. Claim 6 91

TABLE OF CONTENTS
(*cont'd*)

Page No.

G. Claim 7 97

H. Claim 9 98

I. Claim 10 99

1. Schaffer 100

2. Hartley 101

3. Eller 105

J. Claim 15 107

K. Claim 16 108

L. Claim 17 109

M. Claim 18 109

N. Claim 20 109

O. Claim 21 110

P. Claim 22 111

Q. Claim 23 111

R. Claim 24 111

VII. GROUND 5-7: CLAIMS 1-3, 5-6, 9, 15-18, AND 21-24 OBVIOUS OVER HARTLEY IN COMBINATION WITH ELLER 113

A. Claim 1 114

1. Preamble 114

TABLE OF CONTENTS
(*cont'd*)

Page No.

2. Elongate Member 114

3. Tensioning Mechanism 115

4. Biasing Member 120

B. Claim 2 127

C. Claim 3 127

D. Claim 5 128

E. Claim 6 130

F. Claim 9 134

G. Claim 15 135

H. Claim 16 136

I. Claim 17 137

J. Claim 18 137

K. Claim 21 137

L. Claim 22 138

M. Claim 23 138

N. Claim 24 139

VIII. SECONDARY CONSIDERATIONS 139

IX. CONCLUSION 140

TABLE OF EXHIBITS

Exhibit No.	Description
1001	U.S. Patent No. 11,844,921 ("the '921 patent")
1002	Excerpts from the prosecution history of the '921 patent
1003	Expert Declaration of Troy Thornton
1004	Resume of Troy Thornton
1005	U.S. Patent Publication US 2003/0225379 A1 to Schaffer et al. ("Schaffer")
1006	U.S. Patent Publication No. 2003/0116731 A1 to Hartley ("Hartley")
1007	U.S. Patent No. 9,980,813 B1 to Eller ("Eller")
1008	Certified File History of U.S. Patent Application 10/371,190 (Schaffer File History)
1009	U.S. Patent No. 5,429,616 to Schaffer ("Schaffer '616")
1010	U.S. Patent No. 3,438,607 to Williams et al.
1011	U.S. Patent Publication No. 2015/0173782 A1 to Garrison et al. ("Garrison")
1012	U.S. Patent No. 11,697,011 ("the '011 patent")
1013	Inari's Supplemental Infringement Contentions (without claim charts) from *Inari Medical, Inc. v. Imperative Care, Inc.,* No. 24-cv-3117 (N.D. Cal.) (served February 7, 2025).
1014	Google Dictionary Definition of "String"
1015	Cambridge Dictionary Definition of "String"
1016	U.S. Patent No. 12,109,384 B2 to Merritt et al.

Exhibit No.	Description
1017	Decision Granting Institution of *Inter Partes* Review for U.S. Patent No. 11,697,011 (Paper 7) in *Imperative Care, Inc. v. Inari Medical, Inc.,* IPR2024-01157 (P.T.A.B. Jan. 23, 2025)
1018	PCT Patent Publication WO 2018/019829 A1 to Brady et al.
1019	Inari's Notice of Motion and Motion for Leave to File Third Amended Complaint (Dkt. #88) in *Inari Medical, Inc. v. Imperative Care, Inc.,* 24-cv-03117-EKL (N.D. Cal.) (filed March 5, 2025)
1020	U.S. Patent No. 6,776,770 B2 to Treretola
1021	Case Management & Scheduling Order (Dkt. #54) in *Inari Medical, Inc. v. Imperative Care, Inc.,* 24-cv-03117-EKL (N.D. Cal.) (issued December 19, 2024)

I, Troy L. Thornton, do hereby declare:

I. INTRODUCTION

A. Engagement

1. I have been retained on behalf of Imperative Care, Inc. ("Imperative Care") to provide my opinion regarding the patentability of Claims 1-7, 9-10, 15-18, and 20-24 of U.S. Patent No. 11,844,921 ("the '921 patent"). For the reasons discussed herein, I have concluded that Claims 1-7, 9-10, 15-18, and 20-24 of the '921 patent are unpatentable because the prior art references anticipate the claims or render them obvious.

2. I understand that this Declaration supports Imperative Care's Petition for the above-captioned *inter partes* review ("IPR") of the '921 patent.

3. I reserve the right to supplement, change, clarify, or modify my opinions should additional information and/or documentation become available to me. I also reserve the right to submit a rebuttal declaration in response to any expert declaration(s) submitted on behalf of the owner of the '921 patent, Inari Medical, Inc. ("Inari" or "Patent Owner").

4. I am being compensated at my customary hourly rate for my work in this matter and I am being reimbursed at cost for my expenses. My compensation in no way depends upon the substance of my opinions or the outcome of this proceeding. I have no financial interest in any of the parties to this proceeding.

B. Experience and Qualifications

5. My experience and qualifications are summarized in my resume, a copy of which is included as Exhibit 1004.

6. I received a Bachelor of Science degree in Engineering Science, with Biomedical Engineering emphasis, in 1985 from Iowa State University. Since then, I have worked as an engineer, executive, and consultant in the medical device industry, particularly in the cardiovascular field. My work has included designing and developing numerous medical devices in the cardiovascular field, including catheters, percutaneous heart valve repair systems, stent grafts, and blood pumps.

7. Since 2015 I have worked as a consultant for various medical device companies, assisting the companies with early design, development, problem-solving, and intellectual property related matters.

8. Before my current consulting business, I was a Program Director for Abbott Ventures from June 2012 through December 2014. My work at Abbott Ventures focused on technical assessment and analysis of potential investments in both cardiovascular and non-cardiovascular medical device technologies.

9. In June 2000, I assumed the position of Director of Research and Development at Evalve, Inc., and in 2001 was promoted to Vice President of Research & Development. I served in that position until June 2012. While at Evalve, I was responsible for managing all aspects of research and development for

a percutaneous mitral valve repair system known as the MitraClip. The MitraClip system included three complex catheters and a permanent mechanical implant, and I led the research and development for all aspects of the product. The MitraClip product received FDA approval in 2013 and is currently available in over 30 countries.

10. From June 1995 through May 2000, I was a Project Manager at Prograft Medical Inc. While at Prograft, I was responsible for the development and commercial launch of a bifurcated, modular stent-graft used in the treatment of abdominal aortic aneurysms known as Excluder. I managed the overall project from its inception through initial commercialization, which involved designing and building initial protypes, developing physician training materials, assisting with regulatory filings, providing physician training, and supporting physicians during five live case transmissions endovascular symposia.

11. From August 1989 through May 1995, I worked as a Project Group Leader and Senior Engineer for Advanced Cardiovascular Systems at Guidant. My work at Guidant focused on the design and development of percutaneous transluminal coronary angioplasty (PTCA) and perfusion catheters. I was responsible for catheter design, material selection, process development, performance testing, physician evaluation, and animal studies for an elliptical

coronary PTCA catheter that ultimately became the top-selling PTCA in the United States.

12. From 1987 to 1989, I worked as a Manufacturing Engineer at Symbion, Inc. My work at Symbion included developing and improving manufacturing processes for class III medical devices, including a centrifugal blood pump.

13. From 1985 to 1987 I worked as a Process Engineer at Becton-Dickenson, Inc. My work at Becton-Dickenson included validating and implementing manufacturing processes for a thermodilution catheter and conducting cost saving and process improvements for central venous catheter products.

14. In summary, I have more than 35 years of experience in the cardiovascular medical device field, including significant experience designing, developing, testing, and manufacturing catheters and catheter systems for minimally invasive cardiovascular procedures. I am therefore very familiar with the concepts of catheters, catheter systems, and hemostasis valves, and I believe I am well placed to comment on the understanding of a person of ordinary skill in the art in the context of the ’921 patent.

C. <u>Topics of Opinions</u>

15. I offer opinions in this Declaration on the following general topics:

- The subject matter described and claimed in the ’921 patent;
- The level of ordinary skill in the art pertaining to the ’921 patent;
- The teachings of the prior art; and
- Whether Claims 1-7, 9-10, 15-18, and 20-24 of the ’921 patent would have been obvious to a person of ordinary skill in the art at the time of the alleged invention, in view of the prior art.

D. Materials Considered

16. In preparing this Declaration, I have considered the materials referenced in this Declaration and identified in the attached list of exhibits.

17. I have also relied on my education, training, and experience, and my knowledge of pertinent literature in the field of the ’921 patent.

II. APPLICABLE LEGAL STANDARDS

18. I am a biomedical engineer by training and profession. The opinions I am expressing in this Declaration involve the application of my education, training, and technical knowledge and experience to the evaluation of certain prior art with respect to the ’921 patent.

19. Although I have had some prior exposure to patent matters, I am not an expert in patent law. Therefore, I have been advised of certain principles of patent law applicable in this matter, which I have used in arriving at my

determinations and opinions. The paragraphs below express my understanding of how I must apply these principles in forming my opinions.

A. Claim Construction

20. I understand that the first step in assessing the patentability of a patent claim is to understand the meaning of the words used in the claims. I understand this process of defining, or construing, the claim terms is generally referred to as claim construction. Generally speaking, I understand that I am to apply the ordinary and customary (i.e., plain and ordinary) meaning of each claim term as would have been understood by a person of ordinary skill in the art at the time of the invention, consistent with the specification and prosecution history.

21. I also understand that the patentee may act as its own lexicographer such that they may redefine a claim term to have a meaning that is different from the plain and ordinary meaning. I understand that when a patentee has acted as its own lexicographer, the patentee's definition should be applied instead of the plain and ordinary meaning that the term would have absent the redefinition. I understand that the patentee can redefine a claim term in either the specification or in statements made to the Patent Office during prosecution of the patent. I understand that the patentee's redefinition of a term does not need to be provided in express definitional format, but rather that the redefinition can be implied through the disclosure of the specification or the patentee's statements during prosecution.

B. Anticipation

22. I understand that a patent claim is unpatentable if it is "anticipated" by a piece of prior art. I have been instructed that a claim is "anticipated" if a prior art reference describes, either expressly or inherently, each limitation of the claim. I understand that this description must be recognizable to a person of ordinary skill in the art at the time of the alleged invention (in this case, September 6, 2017).

23. I understand that an element is "inherent in," and therefore taught by, the prior art, if it necessarily flows from the explicit disclosure of the prior art. The fact that a certain result or characteristic may be present in the prior art is not sufficient to establish inherency. However, if the result or characteristic is necessarily present based upon the explicit disclosure in the prior art, it is inherent in the prior art and is therefore disclosed.

C. Obviousness

24. I understand that a patent claim may also be unpatentable if it is rendered "obvious" by the prior art. I have been instructed that a claim is "obvious" if the claimed subject matter as a whole would have been obvious to a person of ordinary skill in the art at the time of the alleged invention. I understand that in considering obviousness I must consider the scope and content of the prior art, the differences between the claimed subject matter and the prior art, and the level of ordinary skill in the art at the time of the invention.

25. In determining the scope and content of the prior art, I understand that a reference is considered analogous (i.e., appropriate) prior art if it falls within the field of the inventor's endeavor. In addition, a reference is analogous prior art if it is reasonably pertinent to the particular problem with which the inventor was involved. A reference is reasonably pertinent if it logically would have commended itself to an inventor's attention in considering the problem. If a reference relates to the same problem as the claimed invention, that supports use of the reference as prior art in an obviousness analysis.

26. The prior art references applied in this Declaration are analogous art that is usable in an obviousness combination. The references are from the same field as the '921 patent, e.g., hemostasis valves for use during intravascular procedures. The references are also pertinent to the problem the inventor was focused on, e.g., sealing a catheter during intravascular procedures to minimize blood leaks.

27. To assess the differences between prior art and the claimed subject matter, I have been instructed that the law requires the claimed invention to be considered as a whole. This "as a whole" assessment requires showing that one of ordinary skill in the art at the time of invention, confronted by the same problems as the inventor and with no knowledge of the claimed invention, would have selected the elements from the prior art and combined them in the claimed manner.

28. I am also informed that the law recognizes several rationales for combining references or modifying a reference to show obviousness of claimed subject matter. Some of these rationales include:

- combining prior art elements according to known methods to yield predictable results;
- simple substitution of one known element for another to obtain predictable results;
- a predictable use of prior art elements according to their established functions;
- applying a known technique to a known device (method or product) ready for improvement to yield predictable results;
- choosing from a finite number of identified, predictable solutions, with a reasonable expectation of success; and
- some teaching, suggestion, or motivation in the prior art that would have led one of ordinary skill to modify the prior art reference or to combine prior art reference teachings to arrive at the claimed invention.

29. A prior art reference may also suggest a limitation of the claims. In that case, even if the prior art reference does not explicitly or inherently disclose the limitation, the motivation to modify the prior art reference to include the

limitation may exist within the prior art reference itself. Thus, the limitation would have been obvious over that prior art reference alone. This is the case if a person of ordinary skill in the art would have had a simple design choice or a finite number of identified, predictable solutions, for example, and if the modification furthers the goals of the prior art reference.

30. I have also been informed that the obviousness analysis must be performed from the perspective of a person of ordinary skill in the art at the time of the alleged invention. This is to avoid using impermissible hindsight in the analysis. The claims of the patent must not be used to provide a road map for obviousness; instead, the claims would have been obvious if a person of ordinary skill in the art would have been motivated to combine the teachings of the prior art to arrive at the claimed invention and had a reasonable expectation of success in doing so.

31. An obviousness analysis also must consider whether there are additional factors that would indicate that the invention would not have been obvious. These factors include whether there was: (i) a long-felt need in the industry; (ii) any unexpected results; (iii) skepticism of the invention; (iv) a teaching away from the invention; (v) commercial success; (vi) praise by others for the invention; and (vii) copying by others. I am not aware of any evidence under these factors that would suggest that Claims 1-7, 9-10, 15-18, and 20-24 of the ’921 patent

would have been non-obvious, as further explained in Section § VIII (Heading: "Secondary Considerations") below.

D. <u>Person of Ordinary Skill in the Art</u>

32. It is my understanding that when interpreting the claims of the '921 patent, I must do so based on the perspective of a person of ordinary skill in the art at the relevant priority date. I have been instructed to assume for the purposes of my opinions that the relevant priority date of the '921 patent is September 6, 2017. I have been informed that all of the references relied upon in this Declaration qualify as prior art under that priority date.

33. I am informed that the person of ordinary skill in the art is a hypothetical person who is presumed to have known the relevant art at the time of the invention. This is a person of ordinary creativity, not an automaton.

34. I am informed that in determining the level of ordinary skill in the art, several factors are considered. Those factors may include: (i) the type of problems encountered in the art; (ii) prior art solutions to those problems; (iii) the rapidity with which innovations are made; (iv) the sophistication of the technology; and (v) the educational level of active workers in the field. A person of ordinary skill in the art must have the capability of understanding the scientific and engineering principles applicable to the pertinent art.

35. Based on my review of the specification and claims of the ’921 patent, it is my opinion that a person of ordinary skill in the art would have had an undergraduate degree in mechanical engineering or a related engineering discipline and 2-4 years of product design or engineering experience.

36. I can make this assessment because during my career, I had experience assigning engineers to work on mechanical design projects, including projects to design hemostasis valves or incorporate them into catheter-based projects. For such projects, I would assign an engineer with the experience described above.

III. THE ’921 PATENT

A. Summary of the ’921 Patent

37. The ’921 patent describes embodiments of a hemostasis valve (also referred to in the ’921 patent as a “garrote” valve) for use with a catheter during minimally invasive intravascular procedures. Ex. 1001 (’921 patent) at 5:49-67. The valve creates a seal that prevents blood from passing through the valve, including when a tool is passed through the valve. *Id.* at 5:50-52. The valve prevents blood from leaking through the catheter during the intravascular procedure, and also prevents air or other contaminants from entering the patient’s vasculature. *Id.* at 1:35-38.

38. As illustrated in Figure 2 of the ’921 patent below, the valve described in the ’921 patent includes a “housing 128” that defines a “interior channel 130,” and a collapsible “elongate member 132” that extends through the housing:

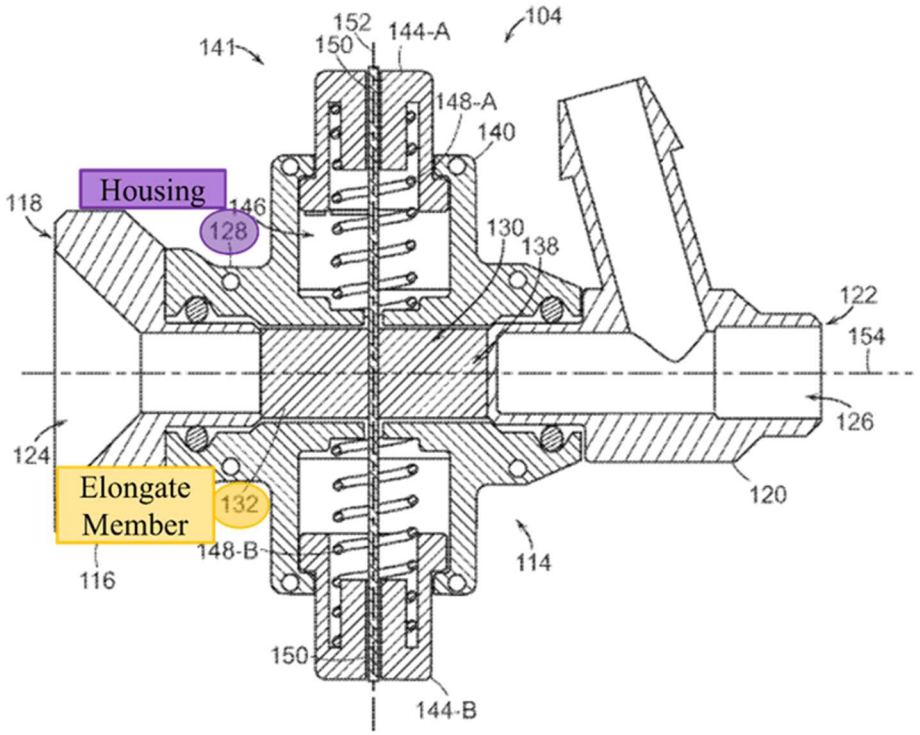

FIG. 2

Id. at 6:49-7:24, Fig. 2. The elongate member 132 has a "thin-walled compliant tubular structure," which helps facilitate "the uniform collapse of the elongate member 132 and the sealing of the elongate member 132." (*Id.* at 7:10-16.)

39. The '921 patent describes that the sealing of the elongate member is accomplished by a "constricting mechanism," which can "collapse and seal the elongate member 132 via compression and/or constriction, and specifically via constriction with at least one filament 150." (*Id.*, 8:1-4.)

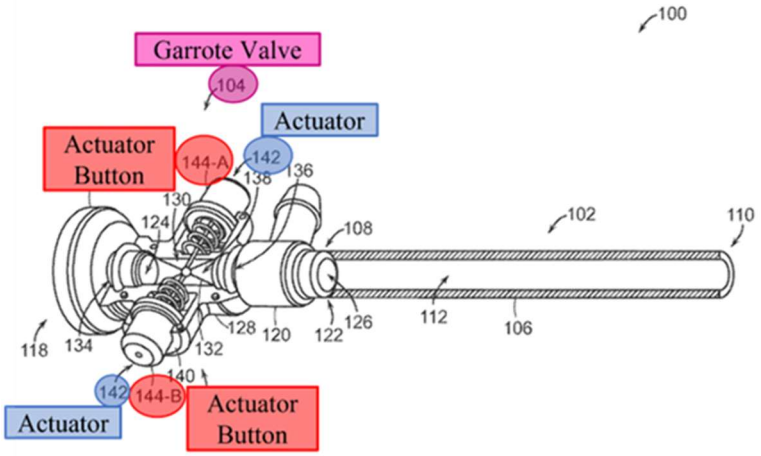

FIG. 1

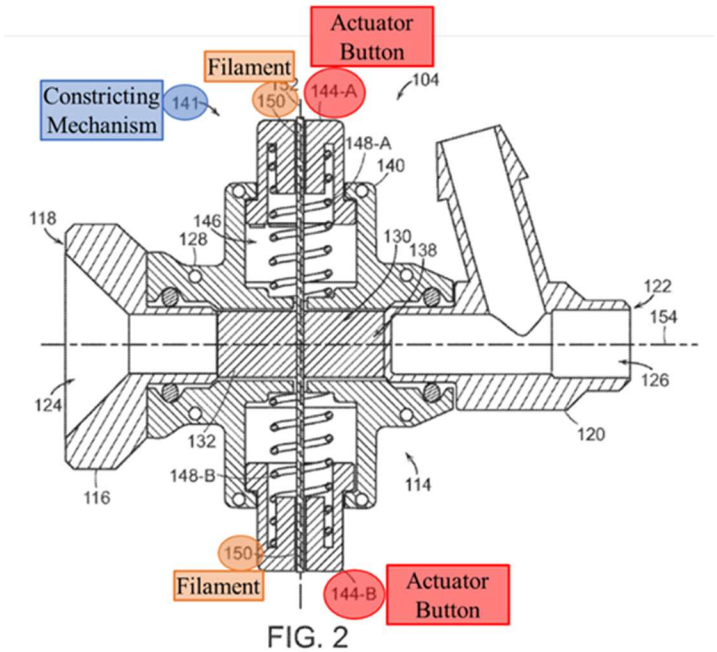

FIG. 2

Id. at Figs. 1-2. The constricting mechanism includes "an actuator 142 which can be a manual actuator such as one or several buttons 144; and the at least one filament 150 that can extend at least partially around the elongate member 132." *Id.* at 8:1-5. The "filament 150 can be coupled to the actuator 142 such that the filament 150

selectively constricts, collapses, and/or seals the elongate member 132 … based on the movement and/or position of the actuator 142." *Id.* at 9:18-22.

40. The valve also includes a "bias feature," such a spring (148-A and 148-B), which biases the actuator toward the open or closed configuration.to. *Id.* at 8:32-51. Figure 4 shows the valve biased toward a first, closed position:

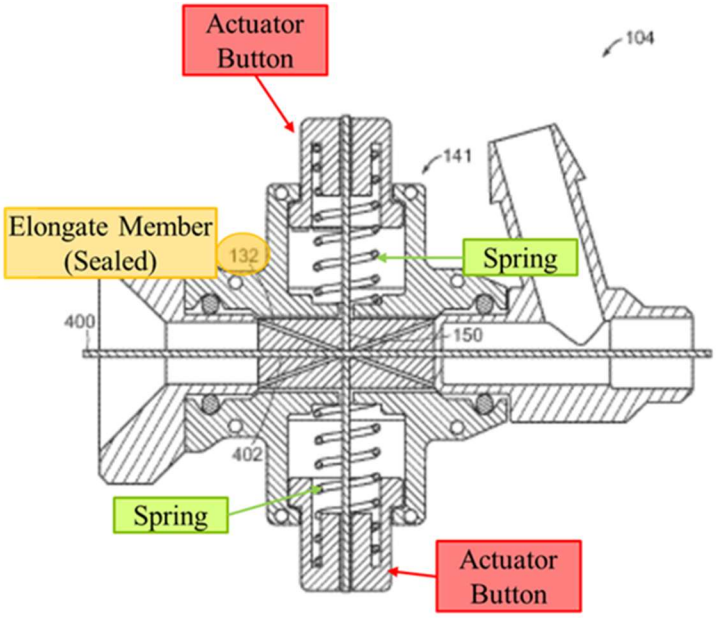

FIG. 4

Id. at 8:32-51, Fig. 2.

41. Depressing the actuator buttons releases tension on the filament, "thereby allowing the expansion of the elongate member 132 and the unsealing of the central lumen 138 of the elongate member 132":

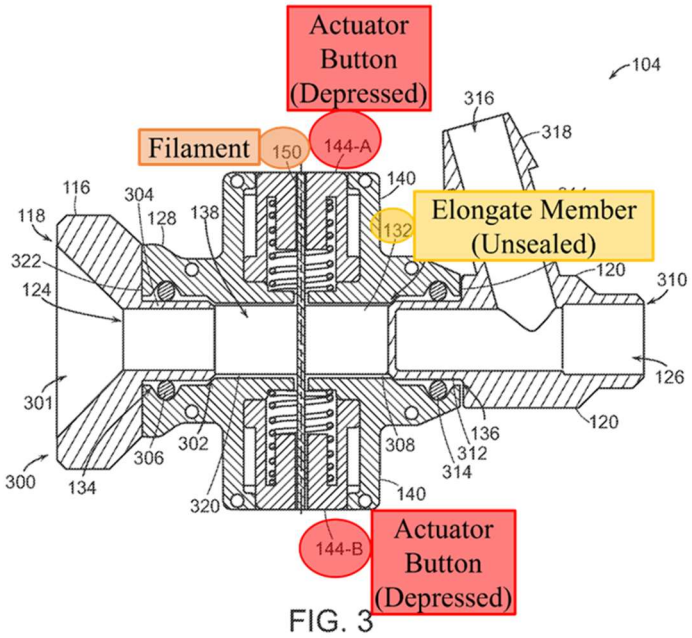

FIG. 3

Id. at 9:48-56, Fig. 3.

42. The filament 150 can constrict the elongate member around a tool 400 inserted through the central lumen of the elongate member, "create[ing] a seal between the elongate member 132 and the tool," as illustrated in Figure 4:

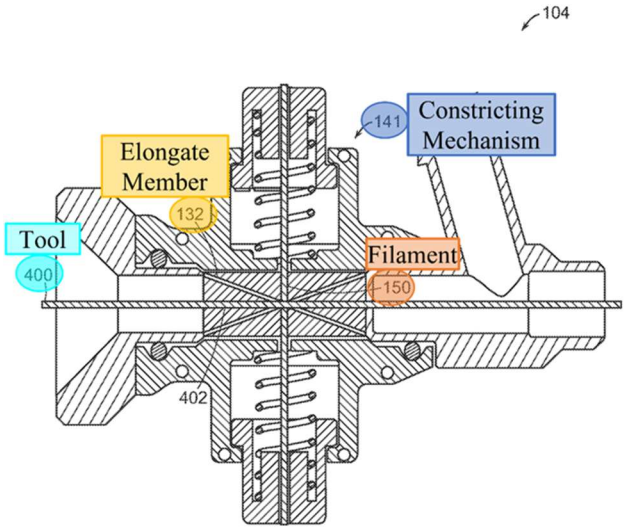

FIG. 4

Id. at 11:64-12:8, Fig. 4.

43. The "filament 150 can be arranged in a variety of configurations" including a "single loop 604 that can extend around the elongate member 132" as shown in Figure 6, multiple loops as shown in Figure 7, or a "U-shaped section between the two ends of the filament 150" as shown in Figures 8-9:

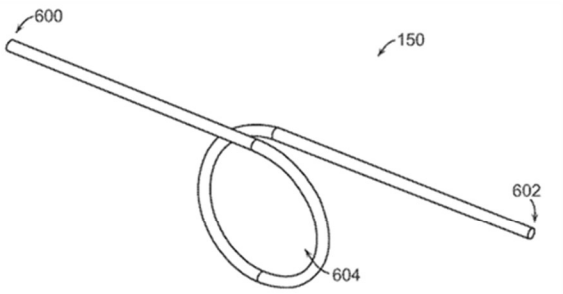

FIG. 6

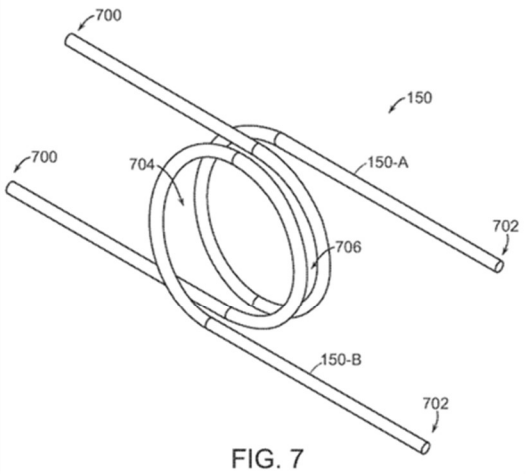

FIG. 7

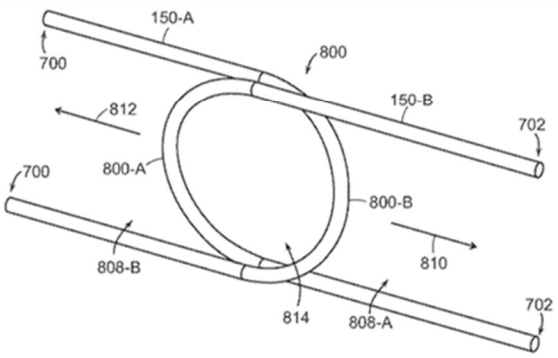

FIG. 8

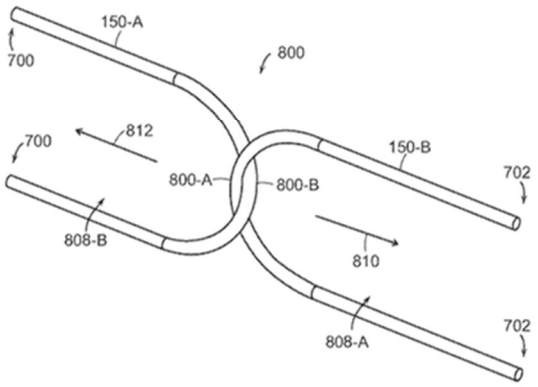

FIG. 9

Id. at 13:10-14:27, Figs. 6-9.

44. The patent also discloses that "[t]he filament can be made from a variety of materials including, for example, a polymer, a synthetic, and/or a metal." *Id.* at 9:13-15. The filament may also "comprise multiple filaments," such as in

Figures 7-9, where "each of the multiple filaments can have a first end 700 and a second end 702":

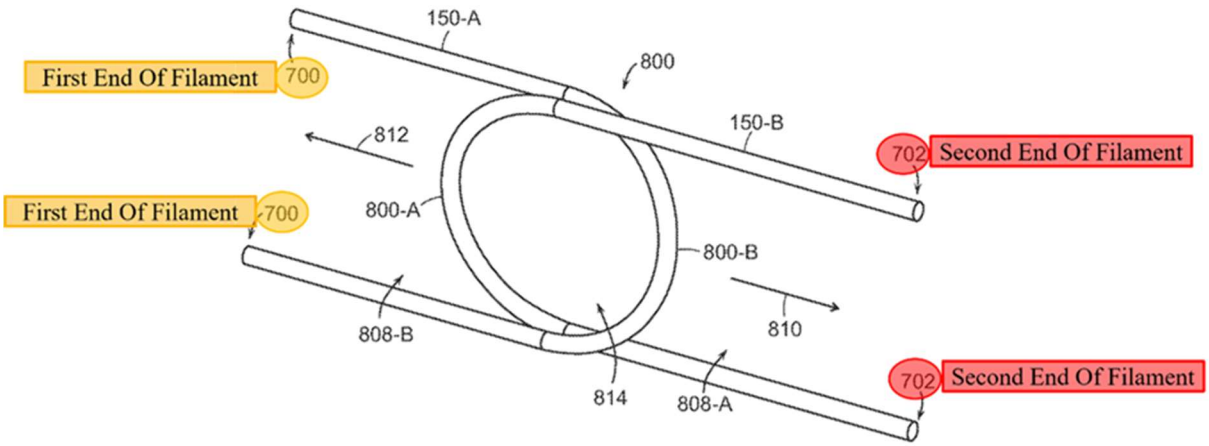

FIG. 8

Id. at 13:1-9, Fig. 8.

B. <u>The Challenged Claims</u>

45. The challenged claims include Claims 1-7, 9-10, 15-18, and 20-24 of the '921 patent. Claims 1, 15, and 21 are independent claims.

46. Claim 1 is illustrative (but not representative) of some of the limitations in the challenged claims. Claim 1 states:

> 1. A valve, comprising:
>
> an elongate member defining a lumen;
>
> an active tensioning mechanism including an actuator coupled to the elongate member via a filament extending at least partially around the elongate member, wherein the actuator is moveable between (a) a first position wherein the lumen is constricted and sealed and (b) a second position wherein the lumen is at least partially open; and;
>
> a biasing member configured to bias the actuator to the first position.

Ex. 1001 ('921 patent) at Claim 1.

C. Prosecution History

47. I have reviewed the '921 patent's prosecution history. I see that the Patent Examiner did not offer any rejections of the claims in an Office Action. Ex. 1002 ('921 patent prosecution history excerpt). I see from the front of the patent that the examiner did not have Schaffer (Ex. 1005) during prosecution, and therefore did not consider the unpatentability arguments presented in this Declaration based on Schaffer. I also do not see that the examiner ever mentioned Eller (Ex. 1007) during prosecution.

48. The Examiner issued a Notice of Allowance. Ex. 1002 at 21-30. In the Notice of Allowance, the Examiner stated that Hartley (Ex. 1006) and Williams (Ex. 1010) were the "closest prior art of record." Ex. 1002 at 25. The Examiner found that Hartley disclosed every limitation of several claims, including current claim 1 (claim 52 during prosecution), except "a biasing member configured to bias the actuator to the first position." *Id.* While the Examiner found that Williams disclosed a biasing member, the Examiner also found that Williams failed to disclose "a filament extending around the elongate member." *Id*. at 26. The Examiner did not address the combination of any references.

IV. CLAIM CONSTRUCTION

49. Independent claims 1, 10, 15, and 21 require a "filament." I have offered a construction for "filament" in previous IPRs involving related patents,

including IPRs for U.S. Patent Nos. 11,691,011 and 11,697,012. I understand that the ’011 and ’012 patents have the same specification as the ’921 patent (the subject of this IPR). Consistent with my previous analysis, it is my opinion that a person of ordinary skill in the art in September 2017 would have understood the term “filament” in the claims of the ’921 patent to mean at least: “one or more threads, lines, cords, ropes, ribbons, flat wires, sheets, or tapes.”

A. <u>The Board’s Institution Decision from the ’011 Patent IPR</u>

50. I have reviewed the Board’s institution decision from the ’011 patent IPR. Ex. 1017. I understand that the institution decision was Paper 7 in that IPR. In the institution decision, the Board found that it did not need to “expressly construe the term ‘filament’ in the manner urged by Petitioner.” *Id.* at 13 (Imperative Care was the Petitioner). However, the Board agreed with “Petitioner that a filament as claimed *encompasses* one or more threads, lines, cords, ropes, ribbons, flat wires, sheets, or tapes.” *Id.* (emphasis in original). The Board observed that the ’011 patent “lists those structures explicitly, but suggests that those are only examples and, thus, the term ‘filament’ may be broader than those structures.” *Id.* I agree with the Board that ’011 patent identifies those structures as examples of “filament” and that additional structures could fall within the meaning of a filament. However, I understand that the Board needs to construe the terms only to the extent necessary to resolve the issues presented in the IPR. In this

IPR, I believe my construction of "filament" resolves the issues presented because the structures identified in the construction (e.g., threads, flat wires) are found in the prior art (as I explain below).

51. I see that the Board also addressed Patent Owner's argument that "filament" should mean "a thin, flexible length of material formed by one or more strands of material." The Board did not adopt Patent Owner's construction. *Id.* at 15 (Inari was the Patent Owner). The Board observed that "the '011 patent never uses the words 'thin' or 'flexible' to describe the 'filament.'" *Id.* The Board also observed that "the words 'thin' and 'flexible' inject potential ambiguities as a relative term" because "flexibility and rigidity exist along a spectrum …." *Id.*

52. I agree with the Board that Patent Owner's proposed construction is erroneous. The Board accurately found that the specification of the '011 patent (and the '921 patent, which has the same specification as the '011 patent) does not describe the filament as "thin" or "flexible." Additionally, the '921 patent does not provide any criteria for flexibility that would help a person of ordinary skill in the art determine whether a specific material was, in fact, "flexible." While the patent identifies some potential dimensions for the "filament(s)," the application states that those dimensions are exemplary, not mandatory. I also believe that Patent Owner's use of the phrase "material formed by one or more strands of material" would exclude several of the exemplary "filaments" identified in the '921 patent. The '921

patent explains that the filaments can be made of metal or polymers and form, for example, a sheet or tape. Ex. 1001 ('921 patent) at 9:15-17. A sheet of metal or polymer, or a tape made of metal or polymer, for example, would not include "one or more strands of material." I have also seen in related patents, such as U.S. Patent No. 12,109,384 (Ex. 1016), that Patent Owner has specified in the claims that the filament is "flexible." Ex. 1016 ('384 patent) at claim 1. This type of explanation would not be necessary if all "filaments" described by the patent were flexible.

53. I see the Board also addressed Patent Owner's argument that the filament must be flexible to "circumferentially constrict" the lumen to create a seal. The Board stated, "Wanting for further explanation, however, is why two bights like shown in Figures 8-9 that cooperatively receive an elongate member in 'encircled area 816' cannot 'circumferentially constrict' the elongate member and lumen when pulled in opposite directions (810-812) even if those bights are substantially rigid." Ex. 1017 at 18. As I stated in other IPRs, I believe Patent Owner's own arguments in related proceedings conflict with its argument. To the Board's point, Schaffer's actuating members circumferentially constrict the seal module and yet, according to Patent Owner, the actuating members are rigid. Additionally, the U-shaped filaments disclosed in the '921 patent operate just like Schaffer's U-shaped actuating members so if Schaffer can circumferentially constrict a lumen with rigid members, then so can the valve in the '921 patent.

54. Ultimately, the debate about the meaning of "filament" does not impact my views on unpatentability. As explained below, Patent Owner's attempts in other IPRs to characterize Schaffer's actuating members as "rigid" is not supported by Schaffer and is inconsistent with how a person of ordinary skill in the art would understand Schaffer. *See* ¶79 (further addressing the rigidity argument). Further, Hartley's and Eller's string/wire member are unquestionably thin and flexible and meet either definition of "filament."

B. <u>Construction of "Filament"</u>

55. As explained above, I have previously construed "filament" in related IPRs. Below, I substantially repeat the analysis I previously provided. I understand from counsel that the claim construction analysis should begin with the language of the claims. Here, the claims do not provide much information about the meaning of "filament." For example, claim 1 recites "a filament … extending at least partially around the elongate member." Claims 15 and 21 require "a filament coupled to the elongate member." Claim 25 requires "a first filament" and "a second filament" where a first actuator is "coupled to the elongate member via a first filament" and a second actuator is "coupled to the elongate member via a second filament." While this language identifies some features that the filament must have (e.g., extending at least partially around the elongate member), the claim

language does not identify the structures, material, or material properties that form a "filament."

56. The specification of the '921 patent identifies structures and materials that may form a "filament." The '921 patent states, "the filament 150 can comprise one or several threads, lines, cords, rope, ribbon, flat wire, sheet, or tape." Ex. 1001 at 9:15-17. I have adopted this description for my construction of "filament." The '921 patent also discloses that "[t]he filament can be made from a variety of materials including, for example, a polymer, a synthetic, and/or a metal." *Id.*, at 9:7-9. The specification also discloses, "the filament can comprise a single strand such as, for example, a monofilament, [or] the filament can comprise a plurality of strands that can be, for example, twisted, woven, grouped, and/or fused to form the filament." *Id.* at 9:10-15. Additionally, the specification explains that "the filament 150 can comprise multiple filaments, and specifically, as shown in FIGS. 7 through 9, the filament 150 can comprise a first filament 150-A and a second filament 150-B." *Id.* at 12:54-57.

57. Figures 8 and 9 (below) illustrate embodiments where the filament is comprised of a "U-shaped section between the two ends of the filament 150" (i.e., a bight):

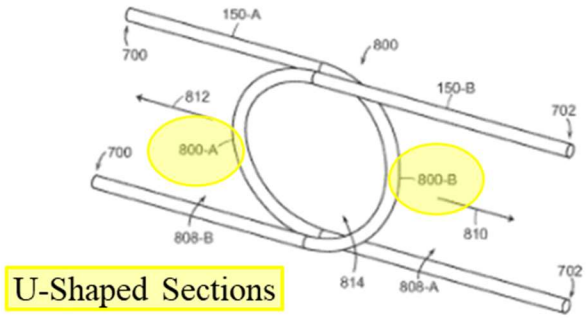

FIG. 8

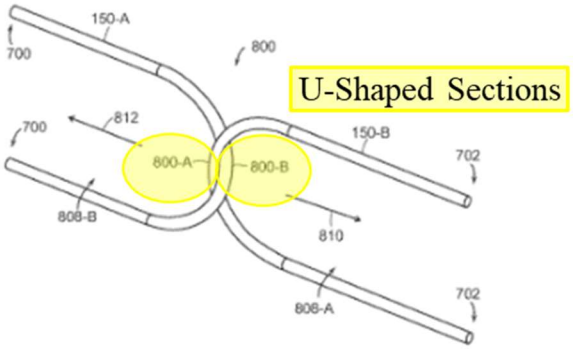

FIG. 9

Id. at 13:10-14:27, Figs. 8-9. Focusing specifically on the embodiments having the "U-shaped section," the '921 patent explains that the filaments can have "any desired cross-sectional shape." *Id.* at 14:22-27. The specification also identifies some exemplary dimensions for the filaments but does not specify any mandatory diameter, thickness, or cross-sectional dimensions for the filament. *Id.* at 14:4-12. The specification also does not require the filament to have a specific amount of flexibility or hardness (or provide any guidance regarding those properties).

58. I understand that the prosecution history can also be relevant in construing patent claims because it can provide insight into how the applicant and the Patent Examiner understood the claims. I see that the Examiner found that Hartley discloses a "filament" as claimed in the '921 patent. Ex. 1002 ('921 Patent Pros. History) at 25. Hartley describes a "string" for constricting Hartley's cylindrical elastomeric diaphragm. Ex. 1006 (Hartley) at [0031]. Thus, the Examiner's analysis of Hartley is consistent with my claim construction because a

string is "one or several threads, lines, cords, rope, ribbon, flat wire, sheet, or tape" as described in the '921 patent. Ex. 1001 ('921 patent) at 9:15-17.

59. Thus, in view of the above analysis of the claim language, specification, and prosecution history, I believe that a person of ordinary skill in the art in September 2017 would have understood the term "filament" recited in the claims of the '921 patent to mean at least: "one or more threads, lines, cords, ropes, ribbons, flat wires, sheets, or tapes."

V. SUMMARY OF IPR GROUNDS

60. I have identified the following grounds of unpatentability in this Declaration:

Ground	Prior Art References	Basis	Claims Challenged
1	Schaffer	35 U.S.C. § 102	1-7, 9-10, 15-18, 20-24
2	Schaffer	35 U.S.C. § 103	1-7, 9-10, 15-18, 20-24
3	Schaffer + Hartley	35 U.S.C. § 103	1-7, 9-10, 15-18, 20-24
4	Schaffer + Eller	35 U.S.C. § 103	1-7, 9-10, 15-18, 20-24
5	Hartley + Eller	35 U.S.C. § 103	1-3, 5-6, 9-10, 15-18, 21-24

VI. GROUNDS 1-4: CLAIMS 1-7, 9-10, 15-18, 20-24 ANTICIPATED BY SCHAFFER OR OBVIOUS OVER SCHAFFER ALONE OR IN COMBINATION WITH HARTLEY OR ELLER

61. Schaffer discloses a hemostasis valve "that blocks the flow of gas or fluid completely and immediately with or without an instrument in place within the

gas/fluid path." Ex. 1005 (Schaffer) at [0002], [0008]. As shown in Figure 32 below, Schaffer illustrates an example of a hemostasis valve that has a tubular seal module 100 extending through the center of the valve and an actuator comprising: (a) two actuator buttons 261 positioned on opposite sides of the seal module, (b) two compression springs 210/267 coupled to the actuator buttons, and (3) two actuating members 55 (which may be U-shaped) that compress the seal module when the actuating buttons are undepressed:

First Position – Actuator Buttons Undepressed

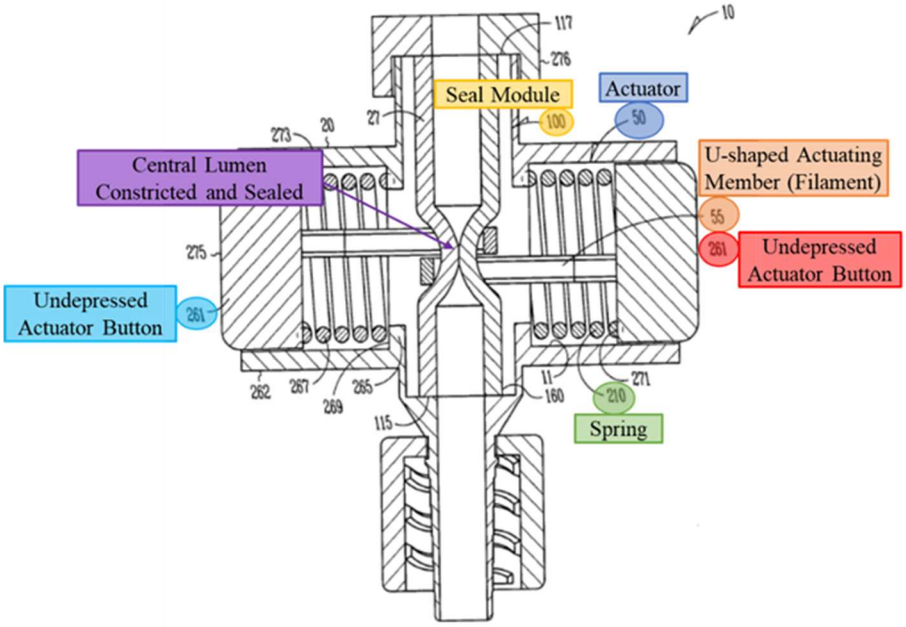

Fig. 32

Id. at [0076]-[0077], Figs. 31-32.[1] Notably, the '921 patent also describes the filaments in Figures 8 and 9 as U-shaped, stating:

[1] In this declaration, I have used the versions of Schaffer's drawings that were submitted to the Patent Office during prosecution of the Schaffer application on June 18, 2003 (Ex. 1008) because they are clearer than the copies of the drawings in Schaffer's published application.

> "In some embodiments, the filament 150 can be configured to form a bight 800, which bight 800 can be a single bight or multiple bights. As used herein, a 'bight' refers to a U-shaped section between the two ends of the filament 150."

Ex. 1001 ('921 patent) at 13:25-26. The example of Schaffer's hemostasis valve depicted in Figures 31-34 has the same components in the same arrangement as the valve claimed in the '921 patent, which is apparent from the side-by-side comparison of Figure 2 of the '921 patent (left) and Figure 32 of Schaffer (right):

'921 Patent | Schaffer

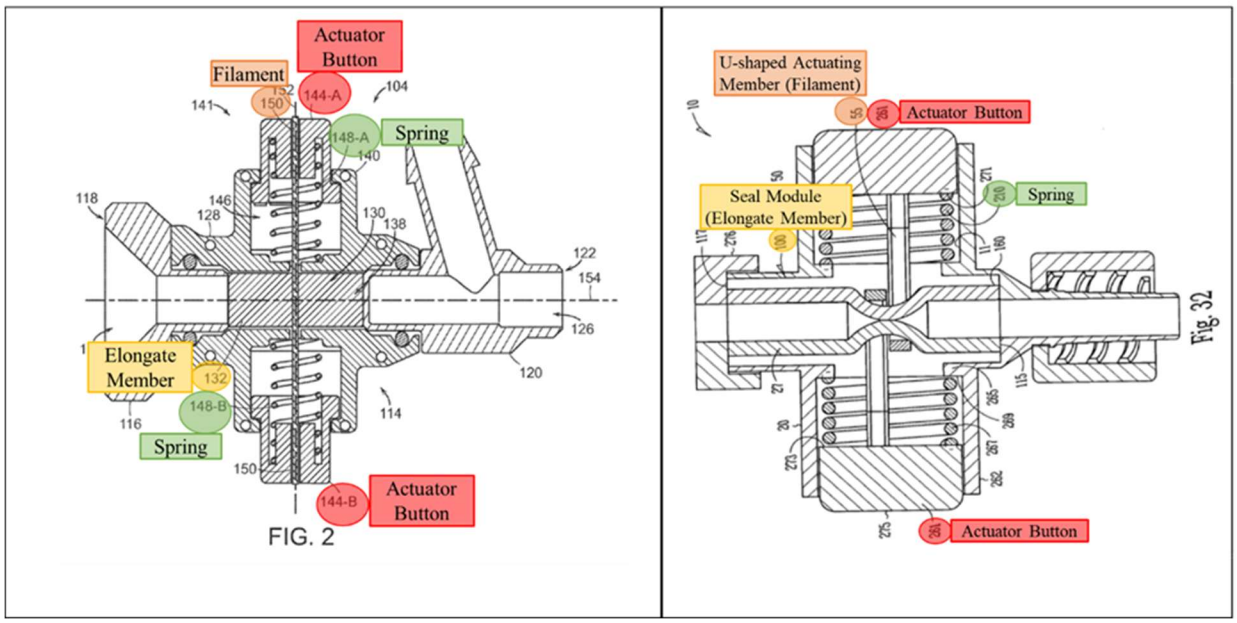

Id. at Fig. 2 (left); Ex. 1005 (Schaffer) at Fig. 32 (right). Because Schaffer discloses all of the hemostasis valve limitations recited in the '921 patent, it is my opinion that Schaffer anticipates claims 1-7, 9-10, 15-18, and 20-24 or renders them obvious.

62. As noted in the preceding paragraph, Schaffer's valve includes two actuating members (which may be U-shaped) that constrict the valve's central lumen to form a seal. Ex. 1005 (Schaffer) at [0076]-[0077]. As I explain in detail below, Schaffer's actuating members are a "filament," as that term is used in the '921 patent, because the described actuating members are at least "ribbons, flat wires, sheets, or tapes." *See supra* ¶¶49-59 (claim construction of "filament"). Further, using a filament (i.e., one or several threads, lines, cords, rope, ribbon, flat wire, sheet, or tape) to constrict the central lumen of a hemostasis valve was not a novel or nonobvious concept in September 2017.

63. Hartley and Eller each disclose hemostasis valves that use a filament to constrict the lumen of a tubular member to seal the valve. Hartley's "filament" is described as a string (or suture, band, or other suitable material) secured to a rotary actuator, which is shown in Hartley's Figure 3 below:

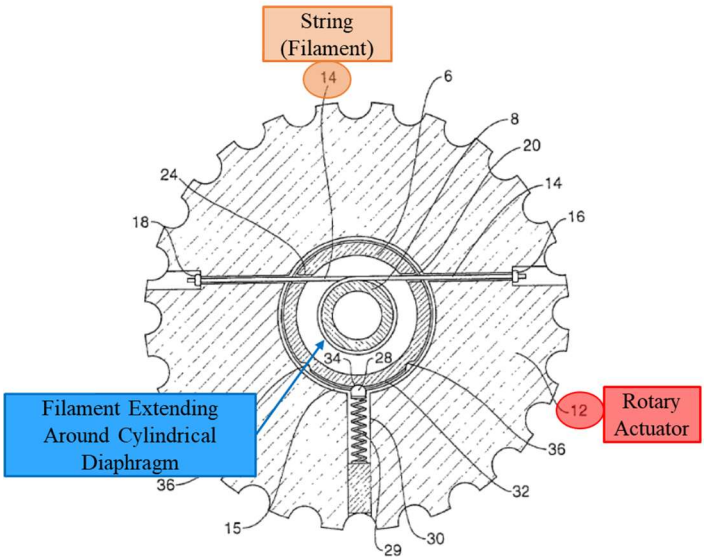

Fig 3

Ex.1006 (Hartley) at [0031], Fig. 3. Eller's "filament" is described as a wire member (or suture or cable) secured to the actuator and valve housing, illustrated in Eller's Figures 2 and 16-17 below:

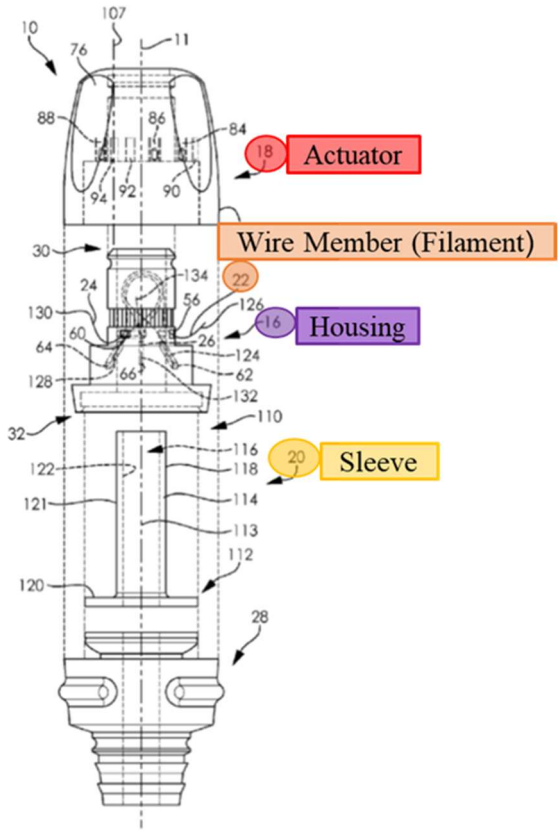

FIG. 2

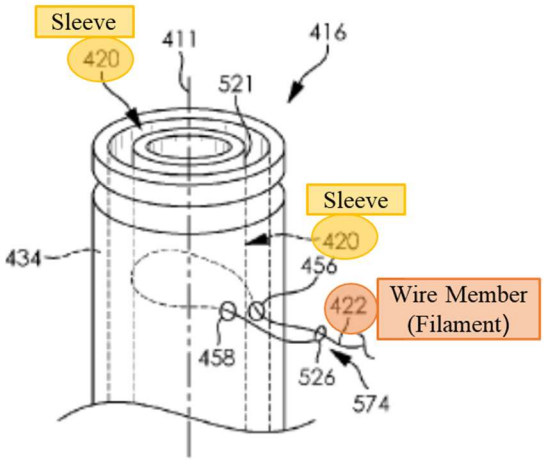

FIG. 16

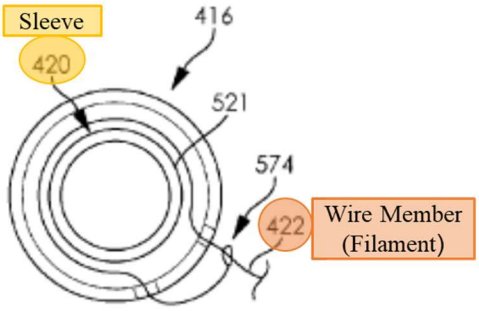

FIG. 17

Ex. 1007 (Eller) at 5:1-5, 16:5-6, Figs. 2, 16-17. Eller explains that the wire member "can be formed of any suitable material using any suitable manufacturing technique, and skilled artisans will be able to select a suitable material and technique to form a wire member according to a particular embodiment based on various considerations, including the material(s) that forms the sleeve of an embodiment." *Id.* at 15:41-47. Some of the exemplary materials identified in Eller include "metals," "polymers," "compliant materials," and "flexible materials." *Id.* at 15:47-60. Eller also explains that "a wire member can comprise a suture or a cable." *Id.* at 16:5-6.

64. For the reasons I provide in detail below, a person of ordinary skill in the art would have been motivated and found it obvious to substitute Hartley's string or Eller's wire member for the actuating members in Schaffer's hemostasis valves. Accordingly, based on my review of these references, I believe that the combination of Schaffer with Hartley ***or*** Eller also renders 1-7, 9-10, 15-18, and 20-24 obvious.

A. <u>Claim 1</u>

65. Based on my review of the prior art, it is my opinion that Schaffer anticipates claim 1 or renders claim 1 obvious alone or in view of Hartley ***or*** Eller.

1. <u>Preamble</u>

66. The preamble of Claim 1 recites: "A valve." If this preamble is limiting, Schaffer, Hartley, and Eller disclose this limitation.

67. Schaffer discloses embodiments of a "fluid stasis valve" for use with catheters to prevent the flow of fluid and/or blood through the valve during medical procedures. Ex. 1005 (Schaffer) at [0002], [0046], [0055].

68. Hartley discloses "an access valve" for use in "medical applications … where it is desired to seal around a catheter or other instrument … to prevent loss of blood or other fluid." Ex. 1006 (Hartley) at [0002]-[0004].

69. Eller discloses "selective fluid barrier valve devices" for procedures "that require the percutaneous insertion of one or more interventional devices into a bodily passage, such as a portion of the vascular system." Ex. 1007 (Eller) at 1:14-23.

2. <u>Elongate Member</u>

70. Claim 1 next recites: "an elongate member defining a lumen." Schaffer discloses this limitation.

71. Schaffer's hemostasis valve includes a "seal module 100" having "a flexible, elongate tubular structure 101." Ex. 1005 (Schaffer) at [0049], [0051], [0054], [0075]. The seal module 100 defines a valve lumen 193 extending therethrough:

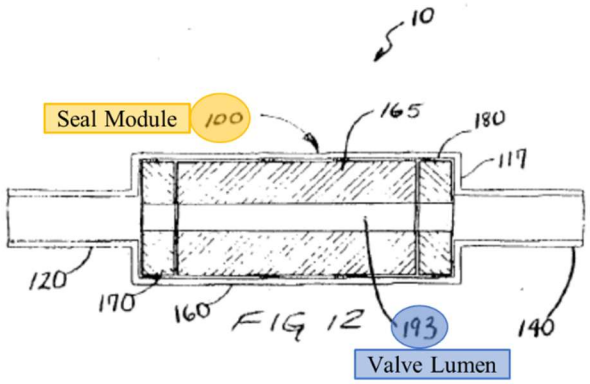

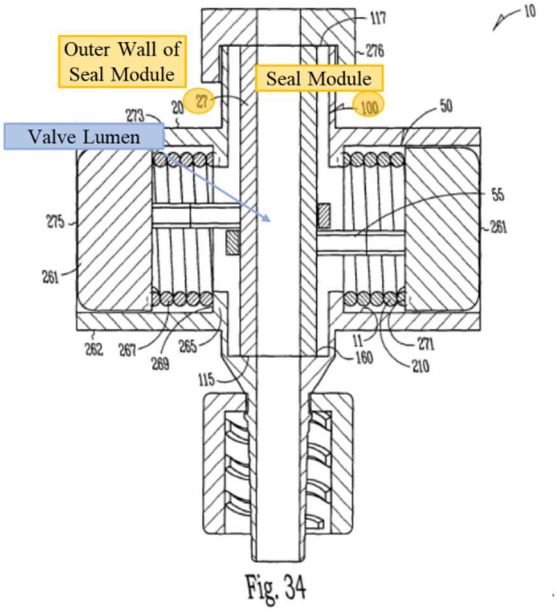

Fig. 34

Id. at [0022, 0075], Figs. 12,[2] 34. Thus, Schaffer's seal module 100 is an "elongate member defining a lumen."

3. <u>Tensioning Mechanism</u>

72. Claim 1 next recites that the valve comprises "an active tensioning mechanism including an actuator coupled to the elongate member via a filament extending at least partially around the elongate member, wherein the actuator is movable between (a) a first position wherein the lumen is constricted and sealed and (b) a second position wherein the lumen is at least partially open." Schaffer discloses the claimed tensioning mechanism or renders it obvious in combination with Hartley ***or*** Eller.

---

[2] While Figure 12 shows a seal module 100 comprised of three seal members 160, 170, and 180, Schaffer discloses that the "seal module 100 is formed of one or more seal members." *Id.* at [0075], Figs. 32, 34. Thus, the seal module 100 may be formed from a single seal member.

a. <u>Actuator</u>

73. Schaffer discloses the actuator required by claim 1. Schaffer discloses a hemostasis valve, depicted in Figures 31-34, that includes two spring-loaded actuators 50 that are "movable from a first position to a second position on opposing sides of the housing." Ex. 1005 (Schaffer) at [0075]-[0076]. The actuators each include an actuator button 261 and a spring 210/267, as illustrated in Figure 32 below:

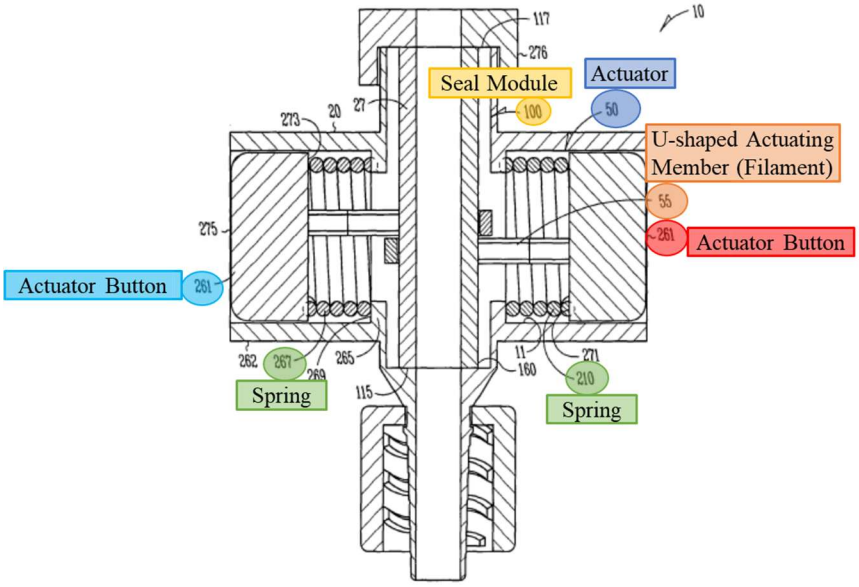

Id. at [0075]-[0076], Fig. 32.

74. Schaffer's actuator buttons are each coupled to "an actuating member 55 which, in one option, is U-shaped." Ex. 1005 (Schaffer) at [0076]-[0077], Figs. 31-34. In turn, the actuating members couple the actuator buttons to the elongate member because, for example, the actuating members wrap around the elongate

member. As I discuss in the section below, Schaffer's U-shaped actuating members are the claimed "filament." Moreover, even if the U-shaped actuating members are not a "filament," a person of ordinary skill in the art would have been motivated to couple the ends of Hartley's string to Schaffer's actuator buttons when substituting Schaffer's U-shaped actuating members for Hartley's string. Similarly, a person of ordinary skill in the art would have been motivated to couple Eller's wire member to Schaffer's actuator buttons when substituting Schaffer's U-shaped actuating members for Eller's wire member.

75. Each actuator button is movable between a first position wherein the lumen is constricted to create a seal and a second position wherein the lumen is at least partially open. Schaffer discloses that in a first position, the U-shaped actuating members are "at least partially circumferencially [sic] disposed about the portion 108 of the seal module 100 depressing and at least partially collapsing a portion 108 of the containment structure 160 by a compressive force 67 (e.g. by a spring 210)." Ex. 1005 (Schaffer) at [0077]. This position is depicted in Figure 32, which shows that the central lumen is completely constricted and sealed in the first position:

First Position – Actuator Buttons Undepressed

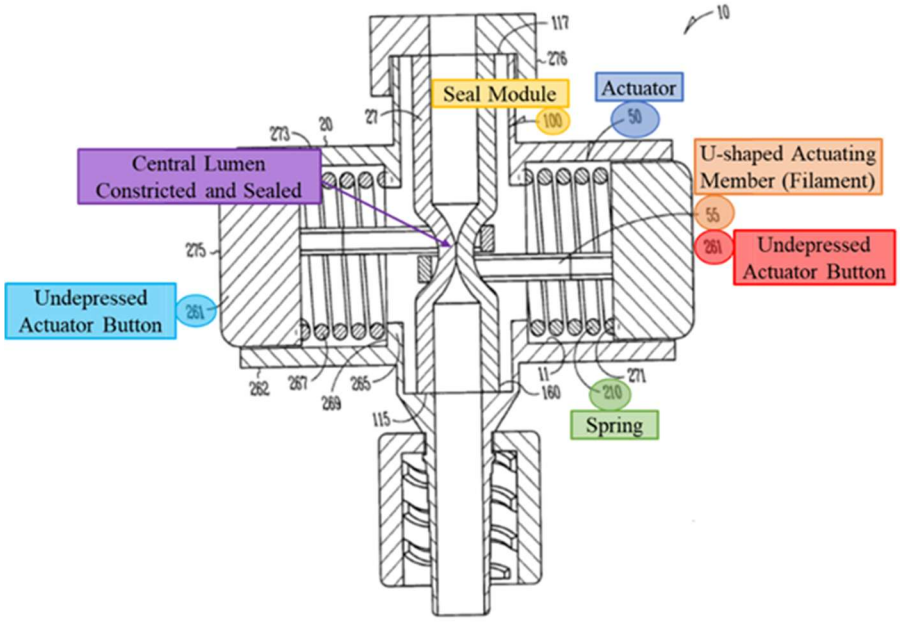

Fig. 32

Id. at [0077], Fig. 32. Schaffer also explains that the described valve "blocks the flow of gas or fluid completely and immediately with or without an instrument in place within the gas/fluid path." *Id.* at [0008].

76. Schaffer explains that in a second position, the actuator buttons are depressed, which compresses the spring and allows the actuator members to "forcibly disengage opposing outer walls 27 of the seal module 100 allowing the portion 108 of the containment structure 160 to retract to an uncollapsed configuration where gases and fluids can pass therethrough." *Id.* The second position is illustrated in Figure 34:

Second Position – Actuator Buttons Depressed

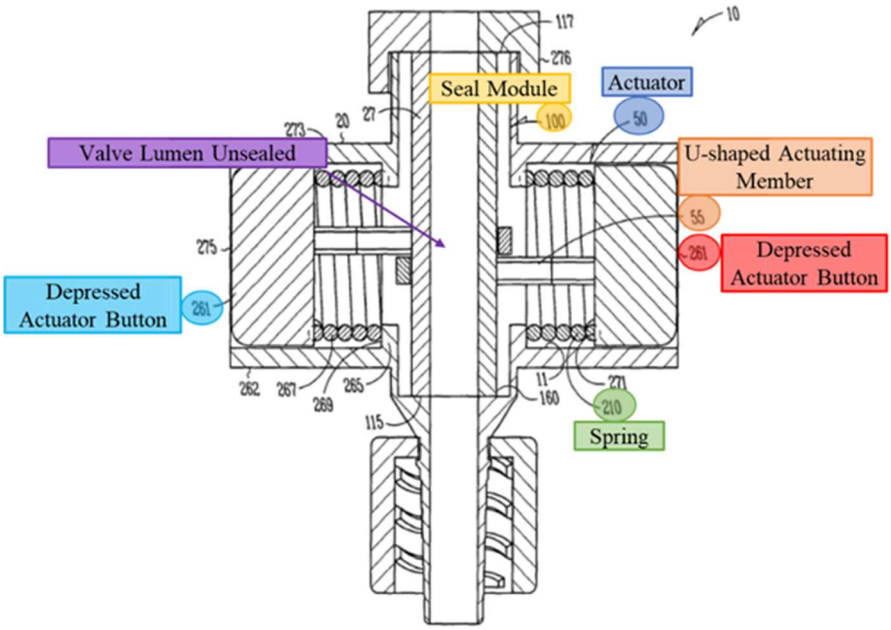

Fig. 34

Id. at [0077], Fig. 34. The user of Schaffer's valve can actively depress the actuator buttons to open and close the valve. Moreover, Schaffer's actuator buttons actively apply tension to the actuating members, via the springs, to seal the valve. For these reasons, a person of ordinary skill in the art would have understood that Schaffer's actuators and actuating members form "an active tensioning mechanism."

77. I note that in previous IPRs, Patent Owner has attempted to suggest that Schaffer's actuating members behave differently from a filament because the patent says the members "forcibly disengage" the walls of the seal. I disagree. The description in Schaffer that the actuating members "forcibly disengage opposing outer walls of the seal module 100" does not mean that the actuating members do not remain in contact with the seal module. As shown in Figure 34 above, the

actuating members are still in contact with the seal module 100 even after being forcibly disengaged. Rather, the term "forcibly disengage" refers to the act of applying force to the buttons to release the tension created by the actuating members on the seal module, which in turn allows the seal module "to retract to an uncollapsed configuration where gases and fluids can pass therethrough." Ex. 1005 (Schaffer) at [0077], Fig. 34. Schaffer's actuating members move in opposition directions when force is applied to the buttons, allowing the seal module/tubular member to retract to an uncollapsed configuration, the exact same way that the '921 patent's filament does.

b. <u>Filament</u>

i. <u>Schaffer</u>

78. Schaffer discloses a "filament," as that term is claimed in the '921 patent. I addressed the meaning of "filament" in the claim construction section above. *Supra* ¶¶49-59. As I explained in the preceding section, Schaffer's valve includes two actuating members, which may be U-shaped, that are coupled to the actuator buttons and constrict the valve when the buttons are undepressed:

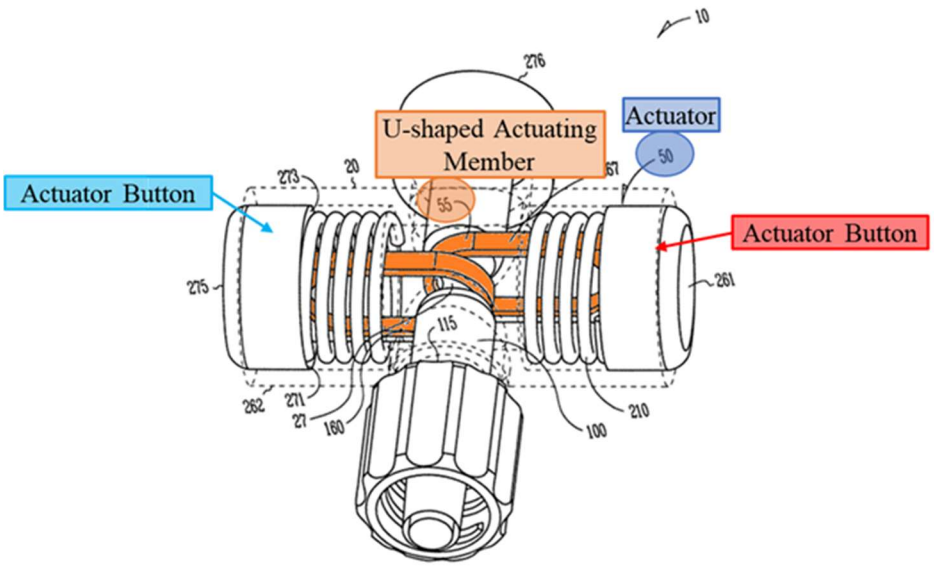

Fig. 31

Id. at [0076], Fig. 31. Schaffer's U-shaped actuating members are "filaments" as claimed in the '921 patent.

79. As I explained in section IV (Heading: "Claim Construction") above, a person of ordinary skill in the art would have understood "filament" to mean at least one or more threads, lines, cords, ropes, ribbons, flat wires, sheets, or tapes based on the description in the '921 patent. *Supra* ¶¶49-59. Schaffer's U-shaped actuating members meet this definition. Schaffer discloses that the U-shaped actuating members are formed from metals, such as aluminum, or plastic, which are consistent with the description of the filaments in the '921 patent (described as being metal or a polymer). Ex. 1005 (Schaffer) at [0081]. Schaffer does not describe the shape of the actuating members beyond stating that they are optionally

U-shaped; however, Schaffer's figures depict the actuating members as resembling a ribbon, flat wire, sheet, or tape, as described in the '921 patent:

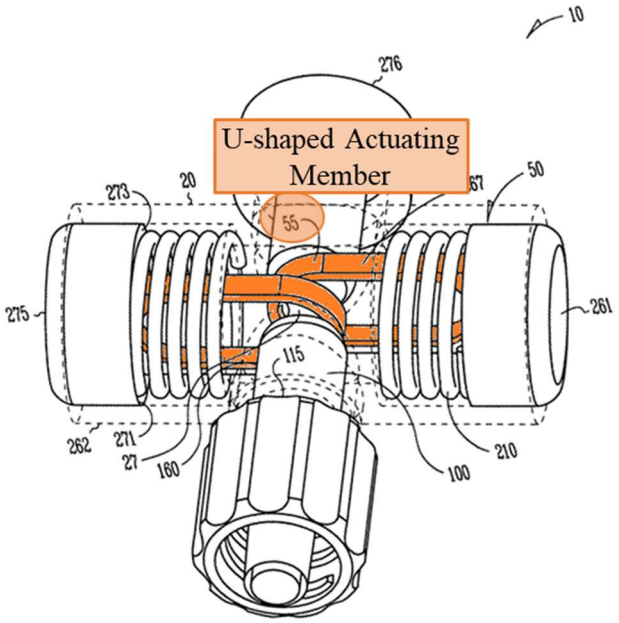

Fig. 31

Id. at Fig. 31; *see also id.* at Figs. 32-34. I notice in related IPRs that Patent Owner characterizes Schaffer's actuating members as "rigid." Patent Owner Preliminary Response re: '011 patent filed in *Imperative Care, Inc. v. Inari Medical Inc.,* IPR2024-01157, Paper 5 at 3 (P.T.A.B. Oct. 29, 2024). However, Schaffer does not describe the actuating members as "rigid," and does not provide any other information that would suggest to a person of ordinary skill in the art that the actuating members are rigid, such as requirements for minimum or maximum dimensions. Thus, I see nothing in Schaffer that would require the actuating members to be "rigid." To the contrary, a person of ordinary skill in the art would have understood that Schaffer's U-shaped actuating members would have

preferably been formed from a thin, flexible material. Such a material would have permitted the actuating members to conform, as much as possible, to the outer surface of the seal module and tool inserted through the valve. For example, not all tools inserted through the valve would have a circular profile. In those cases, U-shaped actuating members having some flexibility would better seal around the irregular shapes. A thin metallic or plastic flat wire, sheet, ribbon, or tape would have provided the flexibility required for the actuating members to best seal around tools of various shapes and sizes. I also note that Patent Owner argues the actuating members in Schaffer are "rigid" based on the following description:

> "The stasis valve 10, in one option, is made from machining pre-existing amounts of metals and/or plastics. For example, [t]he actuating member 55 and the actuating button 261 is machined from aluminum."

Id. at [0082]. However, the description that a device is "made from machining" is not dispositive of whether the finished product is rigid or flexible. In the case of aluminum, for example, if enough material is removed during machining, then the final product would not be rigid. Moreover, the description of "machining" the parts is just "one option." A person of ordinary skill in the art would have known that the U-shaped actuating members could be made using a variety of common manufacturing techniques, including extrusion and drawing. In fact, in September 2017, a person of ordinary skill in the art could have simply purchased pre-made flat wire or plastic tapes or ribbons.

80. Schaffer discloses that the actuating members are "at least partially circumferencially [sic] disposed about the portion 108 of the seal module 100." Ex. 1005 (Schaffer) at [0077]. Schaffer explains that the actuating members are "coupled" to the actuator buttons, and as shown in Figures 32 and 34, Schaffer's actuating members are in contact with the elongate member (seal module) in both the sealed and unsealed positions:

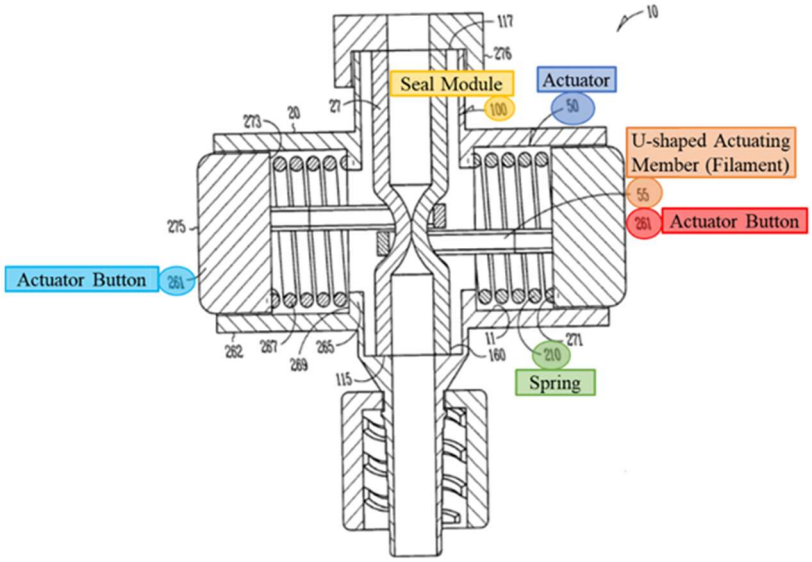

Fig. 32

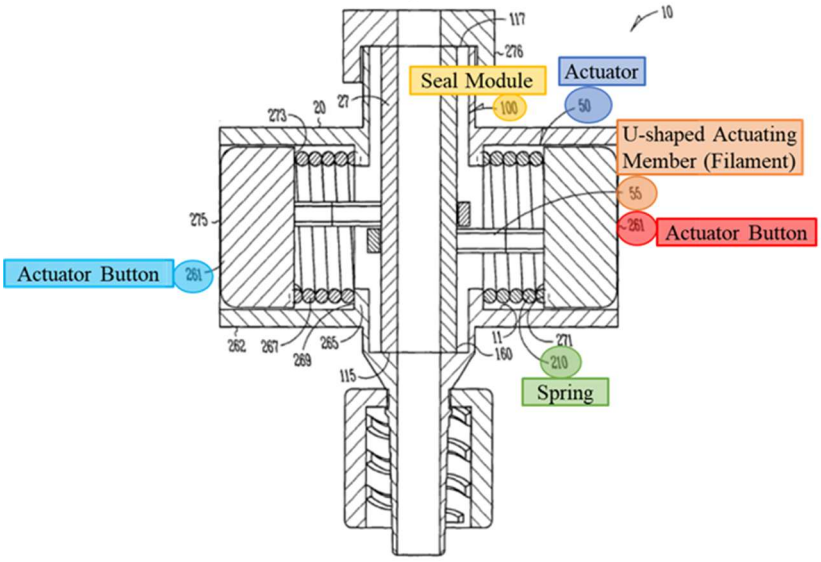

Fig. 34

Ex. 1005 (Schaffer) at [0076]-[0077], Figs. 31-34. Schaffer's actuator buttons are therefore coupled to the elongate member (seal module) via the actuating members (filaments). Also, as shown above and in Figures 31-33, the actuating members also extend at least partially around the elongate member.

81. As explained above with respect to the "actuator" limitation, Schaeffer's Fig. 32 illustrates the lumen of the valve being completely constricted and sealed when the actuator buttons are in the first, undepressed position. *Supra* ¶75. However, even if the Board were to conclude that Schaffer's lumen is not "constricted and sealed" by the actuating members in the first position, as claimed in the '921 patent, a person of ordinary skill in the art would have found it obvious to modify the actuating members to closely conform to the seal module to constrict and seal the lumen. Schaffer discloses that the actuating members are "at least partially circumferencially [sic] disposed about the portion 108 of the seal module 100." Ex. 1005 (Schaffer) at [0077]. The phrase "at least partially circumferencially [sic] disposed" strongly suggests that the U-shaped actuating members can also be ***completely*** circumferentially disposed around the seal module. A person of ordinary skill in the art would have been motivated to configure the U-shaped actuating members to circumferentially constrict the lumen to form a better seal and avoid the gaps I discuss below. *Infra* ¶¶82-94 (Section titled "Hartley"). The required adjustments, to the extent any adjustments were needed, would have

been simple, including modifying the shape, material, mechanical properties, and/or dimensions of the U-shaped actuating members to better conform to the cylindrical shape of the seal module. For example, the actuating members could be formed from a thin, flexible sheet or flat ribbon of metal or plastic so that they have the flexibility to conform to the outer surface of the cylindrical seal module. A person of ordinary skill in the art would have reasonably expected success in making these simple and routine adjustments. Actuating members with this type of structure and flexibility would circumferentially constrict the lumen of Schaffer's seal module when pulled in opposite directions by the actuator buttons. For these reasons, if Schaffer does not disclose the "filament" limitation, it renders the limitation obvious.

ii. <u>Hartley</u>

82. Hartley also discloses a "filament." Hartley discloses a fluid control valve that "can be controlled to vary the size of the aperture through the valve and be flexible so that a seal may be formed against an instrument or other object inserted through the access valve." Ex. 1006 (Hartley) at [0004]. As shown in Figure 1 below, Hartley's valve includes a cylindrical valve housing that houses a "cylindrical elastomeric diaphragm," and a rotary actuator mounted onto the housing:

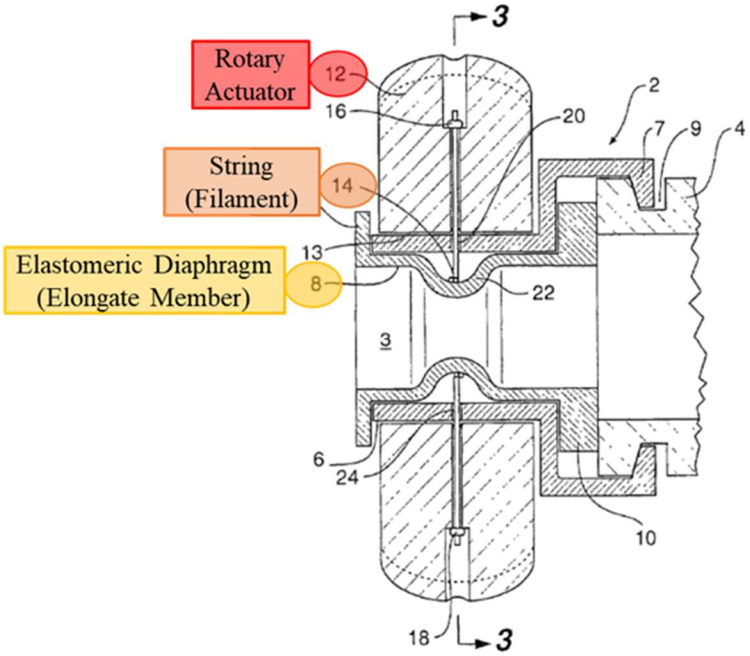

Fig 1

Id. at [0031], Fig. 1. Hartley's valve also includes a "flexible member," referred to as a "string" in the Detailed Description section, that is "mounted into the rotary actuator." *Id.* at [0005], [0031]. Hartley discloses that the flexible member "may be a string, suture or band or other suitable material." *Id.* at [0017]. Hartley's flexible member is therefore a "filament" as claimed in the '921 patent because a "string" is made of at least one or more threads, lines, or cords.

83. Hartley discloses that the "flexible member may be mounted at both of its ends to an actuator arrangement and hence the flexible member can be simultaneously pulled in substantially opposite directions to constrict the valve." Ex. 1006 (Hartley) at [0010]. As shown in Figure 3 below, Hartley's string is

secured to the rotary actuator at a first end via knot 16 and "then passes through an aperture 20 in the cylindrical housing 6 and then is wound preferably twice around the cylindrical diaphragm 8 … and then passes through a further aperture 24 in the cylindrical housing before being fixed by knot 18 again in the rotary actuator":

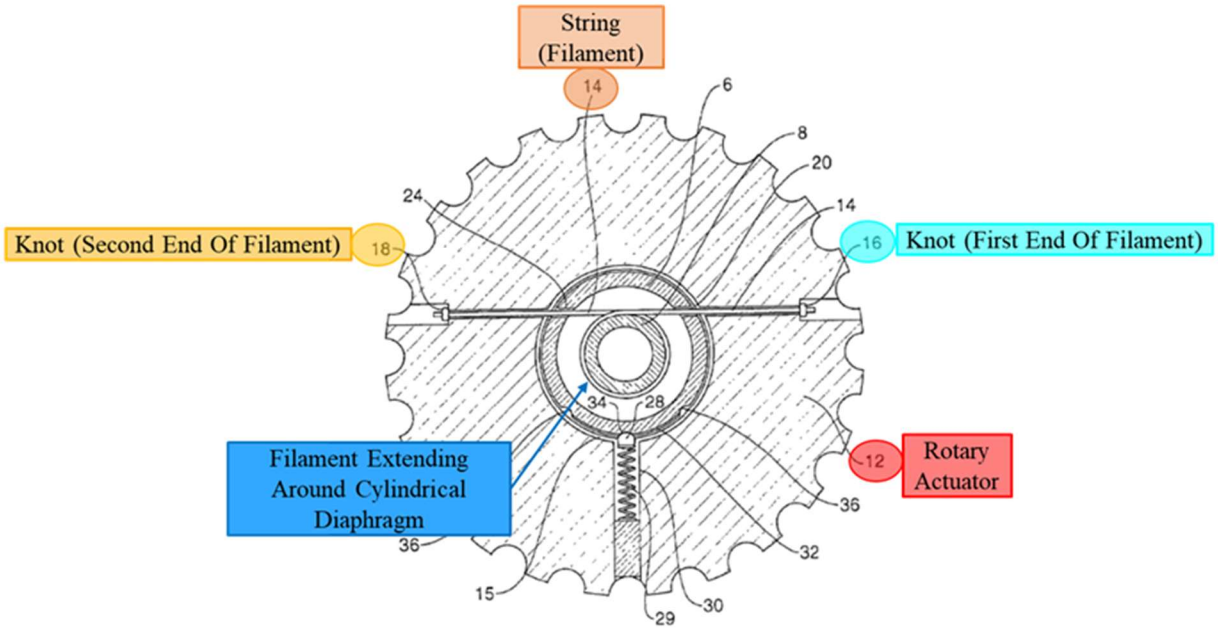

Fig 3

Id. at [0031], Fig. 3. Hartley's string therefore extends at least partially around the elongate member as recited in Claim 1.

84. Hartley discloses that "[r]otation of the rotary actuator 12 with respect to the cylindrical housing 6 will cause the string 14 to be pulled in both directions at once and hence the cylindrical diaphragm 8 to be constricted." *Id.* at [0031], [0034], Fig. 4. Hartley also discloses that its valve "will close over a range of diameters of devices passed through the valve or can close completely down to be self sealing." *Id.* at [0037]. A person of ordinary skill in the art would have

understood that Hartley's ability to seal over a range of devices and to self seal when no device is passed through the valve is an important benefit for a hemostasis valve used during intravascular procedures, and it is important to minimize blood loss when a tool is inserted through the valve and before/after the tool is inserted. *See, e.g.,* Ex. 1005 (Schaffer) at [0008] (recognizing that "what is needed is a durable stasis valve that blocks the flow of gas or fluid completely and immediately with or without an instrument in place within the gas/fluid path").

85. A person of ordinary skill in the art would have found it obvious, and been motivated to, substitute Hartley's string/flexible member for Schaffer's U-shaped actuating members for several reasons. First, a person of ordinary skill in the art would have been motivated by Hartley's disclosure that its valve with the string can "close over a range of diameters of devices passed through the valve or can close completely down to be self sealing." Ex. 1006 (Hartley) at [0037]. A person of ordinary skill in the art would have known that multiple tools of varying sizes and shapes could be required for a medical procedure, so Hartley's ability to seal around a range of diameters/shapes would have been beneficial. A person of ordinary skill in the art would have also recognized that a hemostasis valve should seal and prevent leakage of fluid even when no tool is inserted through the valve, such as at the beginning or end of a medical procedure. Thus, Hartley's stated

ability of its string to completely close the lumen when no tool is inserted would have also been a valuable benefit to a person of ordinary skill.

86. Second, a person of ordinary skill in the art would have recognized that Hartley's flexible string may better seal the valve than Schaffer's metallic/plastic U-shaped actuating members depending on the precise dimensions, materials, and mechanical properties of the actuating members. Hartley's flexible string may better conform to varying diameters or shapes of tools inserted into the valve than Schaffer's U-shaped actuating members. For example, as I discussed above, not all tools will have a round profile and Hartley's flexible string may better conform to the tool than the U-shaped actuating members. A person of ordinary skill in the art would have recognized that if Schaffer's U-shaped actuating members were not sufficiently flexible and conformable to form a perfect seal for a wide range of tools, small gaps could form between the tool and the valve's lumen, as illustrated in the graphic below:

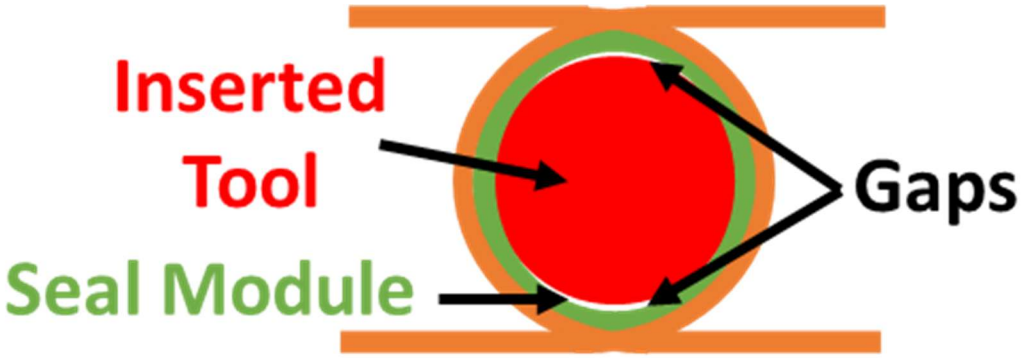

However, Hartley's string encircles and, depending on the materials, may conform to the size and shape of a wider range of tools used with the valve. This ability to accommodate more tools would have been a highly desirable feature to a person of ordinary skill in September 2017. I note in related proceedings that Patent Owner argues a person of ordinary skill in the art would not have been motivated to modify Schaffer's valve with Hartley's string because Schaffer would not result in gaps. Patent Owner Preliminary Response re: '011 patent filed in *Imperative Care, Inc. v. Inari Medical Inc.,* IPR2024-01157, Paper 5 at 28-29 (P.T.A.B. Oct. 29, 2024). However, even Schaffer recognizes it may not form a complete seal with the "gelatinous" and "sticky" valves identified by Patent Owner, stating the valves form a "***nearly*** fluid/gas tight seal." Ex. 1005 (Schaffer) at [0059]. Further, Patent Owner argues that Schaffer discloses a "gelatinous" or "sticky" valve with "selfclosing" properties. Patent Owner Preliminary Response re: '011 patent filed in *Imperative Care, Inc. v. Inari Medical Inc.,* IPR2024-01157, Paper 5 at 29 (P.T.A.B. Oct. 29, 2024). But the portion of Schaffer that refers to a "sticky" or "gelatinous" substance refers to embodiments of the valve having three portions where one of the portions can optionally be made from a "sticky" or "gelatinous" substance having a specific "shore hardness." Ex. 1005 (Schaffer) at [0059]. Schaffer discloses many other materials that would not be "sticky" or "gelatinous" that could make up that same portion of the valve, such as modified vinyl, silicone,

or polyurethane. *Id.* Nothing in Schaffer suggests that the third valve portion must be made with a "sticky" or "gelatinous" substance. Additionally, Schaffer makes clear that the valves in Figures 31-34 do not require the third portion stating: "The seal module 100 is formed of one or more seal members, as discussed above." *Id.* at [0075]. Further, a person of ordinary skill in the art would have recognized that the "sticky" or "gelatinous" materials would not work well with the seal modules disclosed in Figures 31-34 because those seal modules must "retract to an uncollapsed configuration" when the tension on the module is released by the actuating members. A seal module made of the "sticky" or "gelatinous" materials would not easily return to its uncollapsed configuration.

87. Third, the combination of Hartley's string and Schaffer's valve would have merely entailed the substitution of one known element (Hartley's string) for another (Schaffer's U-shaped actuating members) and would have yielded the predictable results of constricting the central lumen of Schaffer's valve to form a seal. I do not see any significant technical challenges that a person of ordinary skill would have confronted in substituting Hartley's string for Schaffer's U-shaped actuating members, and I believe that the substitution would have been well within the level of ordinary skill in September 2017. I note in related proceedings that Patent Owner argues that a person of ordinary skill in the art would not have combined Hartley's string with Schaffer's valve because the combination would

compromise Schaffer's "ease of manufacturing and durability." Patent Owner Preliminary Response re: '011 patent filed in *Imperative Care, Inc. v. Inari Medical Inc.,* IPR2024-01157, Paper 5 at 33 (P.T.A.B. Oct. 29, 2024). Notably, however, Schaffer does not claim to be easy to manufacture or durable. Further, as I explained during my deposition in the Litigation, Hartley's string would not have made Schaffer's valve so much more difficult to manufacture that it would have discouraged a person of ordinary skill in the art from making the combination. A person of ordinary skill in the art would have known of many ways to assemble the valve with the string. For example, a tapered fixture could be used to introduce a folded/collapsed seal module through the looped strings that are already attached to the buttons. Alternatively, the seal module could be positioned in the valve before the strings were looped around the module and connected to the buttons. Fundamentally, Schaffer's valve uses simple, predictable components and a person of skill would have had ample training and experience to manufacture the valve using Hartley's strings. Moreover, I see no basis for Patent Owner's argument that Hartley's strings would "weaken the valve's durability." Hartley uses the strings for the same purpose they would be used in Schaffer's valve and does not identify any issues with durability. Based on the teachings in Schaffer, a person of ordinary skill in the art would reasonably expect success in using Hartley's string in Schaffer's valve.

88. Fourth, as Schaffer recognizes, fluid stasis valves generally comprise "a resilient material in compression within a housing or clamping member." Ex. 1005 (Schaffer) at [0003]. There were a finite number of ways to compress the resilient material in a hemostasis valve to create a seal in September 2017. Hartley and Schaffer disclose two such methods – Hartley's single string and Schaffer's two U-shaped actuating members formed from metal or plastic. As I discuss in the following section, Eller discloses a third option: one or more wire members. A person of ordinary skill in the art in September 2017 would have found it obvious to select from these finite, predictable options. And as I explain below, they would have had a reasonable expectation of success in implementing them.

89. Moreover, when replacing Schaffer's actuating members with Hartley's string, a person of ordinary skill in the art would have been motivated to loop Hartley's string around Schaffer's seal module (as in Hartley). Hartley discloses that looping the string around the cylindrical diaphragm will allow the diaphragm to "close over a range of diameters of devices passed through the valve or can close completely down to be self sealing." Ex. 1006 (Hartley) at [0031], [0037]. A person of ordinary skill in the art would have reasonably expected success in looping Hartley's string around Schaffer's seal module because Hartley discloses the configuration forms an effective seal.

90. A person of ordinary skill in the art would have had reasonably expected success in substituting Hartley's string for Schaffer's U-shaped actuating members for multiple reasons. First, Hartley teaches a simple method for attaching its string to an actuator – a knot at the terminal ends of the string. Ex. 1006 (Hartley) at [0031]. A person of ordinary skill in the art would have reasonably expected that this same method could be used to attach Hartley's string to each of Schaffer's actuator buttons. For example, small holes could be made in each of Schaffer's actuator buttons, and each end of the string could be threaded through the hole on the opposite buttons and knotted on the other side. This would have been a very simple modification, and a person of ordinary skill in the art would have been fully capable of implementing it in September 2017. The demonstrative illustration that I provide below depicts a basic diagram of how this modification could be achieved. As shown, the first end of the string would be secured to the first actuator button (first actuator member), the string would loop at least once around the lumen of Schaffer's valve, and then the second end of the string would be secured to the second actuator button (second actuator member) on the opposite side of the valve:

Demonstrative Illustration
Schaffer + Hartley's String

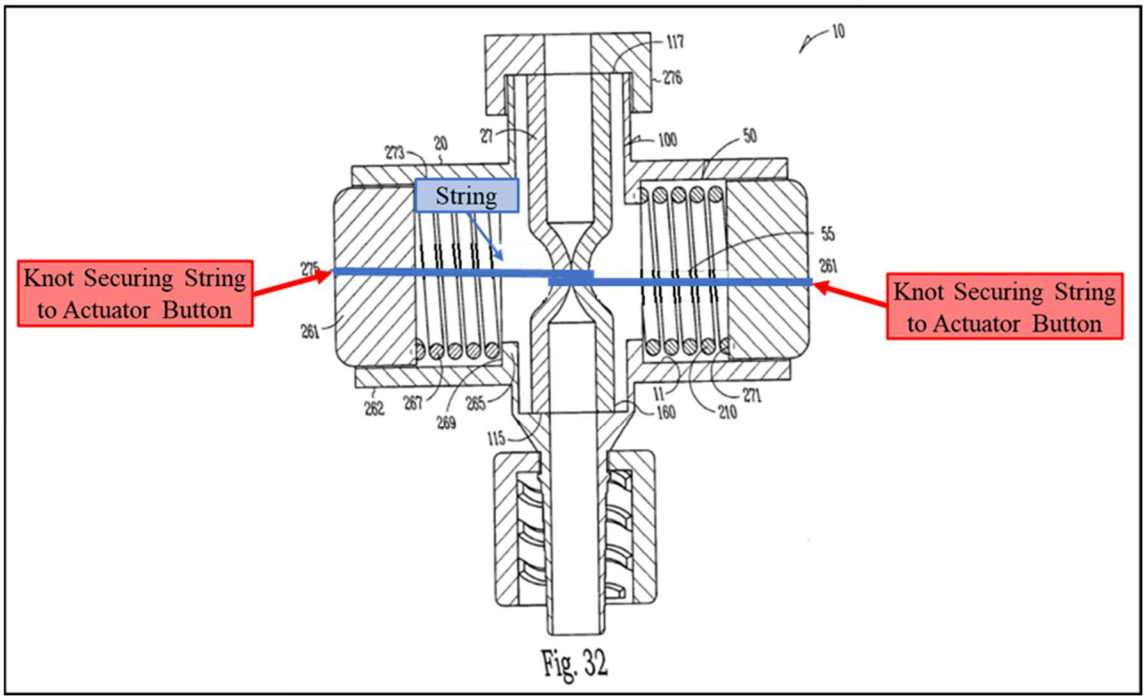

91. Second, a person of ordinary skill in the art would have recognized that Hartley's string and Schaffer's U-shaped actuating members use similar mechanisms to compress and seal the central lumen of the valves, and therefore no additional modifications of Schaffer's valve would be necessary when implementing Hartley's string. Hartley's string seals the valve in response to rotation of the actuator, which causes "the string 14 to be pulled in both directions at once and hence the cylindrical diaphragm 8 to be constricted" as shown in Figures 3 (relaxed) and 4 (constricted):

Relaxed State

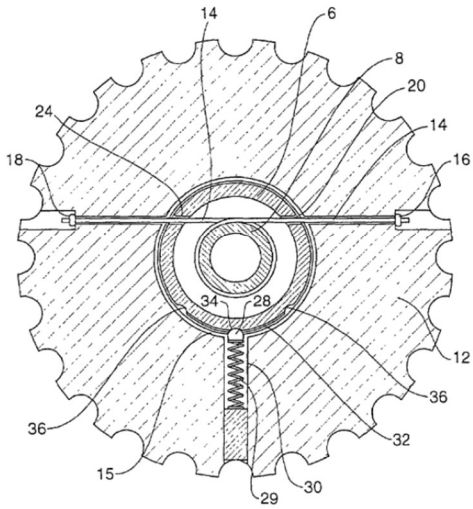

Fig 3

Constricted State

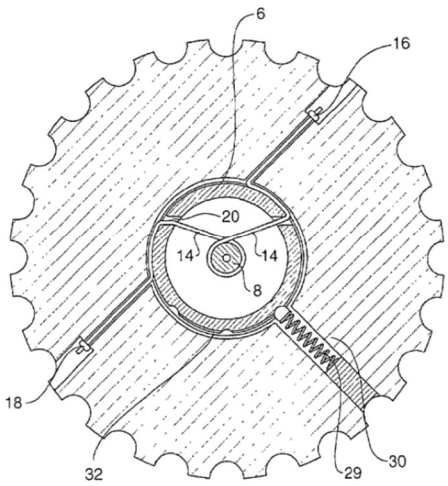

Fig 4

Ex. 1006 (Hartley) at [0031], Figs. 3-4. Schaffer's U-shaped actuating members seal the central lumen when compressive forces supplied by the springs attached to the actuator buttons cause the U-shaped actuating members to constrict and collapse the seal module, as illustrated in Figure 32:

Constricted State

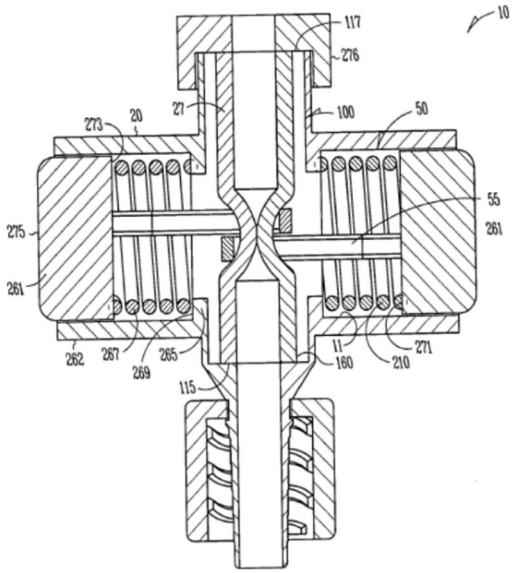

Fig. 32

Ex. 1005 (Schaffer) at [0077], Fig. 32. Thus, both Hartley and Schaffer seal the central lumen of the valve by pulling the string/actuating members in opposite directions to constrict and compress the central lumen of the valve. *See* Ex. 1005 (Schaffer) at [0077], Ex. 1006 (Hartley) at [0031]. Moreover, both Hartley and Schaffer disclose a seal module/cylindrical diaphragm that is resilient and can resume its open position when tension is removed by pressing the buttons. For example, Schaffer discloses that its seal module is formed of a "resilient material" that will "retract to an uncollapsed configuration" when the compressive forces are removed. Ex. 1005 (Schaffer) at [0003], [0077]. Similarly, Hartley discloses that "the cylindrical diaphragm is formed from a resilient material so that after constriction and release of the flexible member the valve reopens." Ex. 1006 (Hartley) at [0008].

92. In view of the similarities between the operation of Hartley and Schaffer's valves, a person of ordinary skill in the art would have expected Hartley's string to serve as a reasonable, if not superior, substitute for the U-shaped actuating members. In a first position, Schaffer's undepressed actuator buttons would cause the "string 14 [attached to the buttons] to be pulled in both directions at once." *See* Ex. 1005 (Schaffer) at [0077]; Ex. 1006 (Hartley) at [0031]. This would cause the string to constrict and collapse the lumen of Schaffer's containment structure, sealing the valve.

93. Then, when Schaffer's actuator buttons are depressed and moved to the second position, the compressive forces from the springs would be relaxed, relieving the tension on the string, and causing the string to loosen around the central lumen so that the lumen at least partially opens. *See* Ex. 1005 (Schaffer) at [0077]; Ex. 1006 (Hartley) at [0031]. Schaffer discloses that the seal module is formed from a "highly deformable, non-compressible material 166 (e.g., plastic)" and is "configured to maintain an open lumen 193 when no compressive force 67 is applied." Ex. 1005 (Schaffer) at [0054]. Thus, a person of ordinary skill in the art would have expected that Schaffer's lumen would have the resilience to return to its open configuration when the actuator buttons are pressed inwardly, and the tension on the string is released such that "no compressive force [] is applied" to the lumen." *Id.*

94. Moreover, if the person of ordinary skill found that the resiliency of Schaffer's lumen required adjustment to function with Hartley's string, the person of skill would have possessed the skills and knowledge to select an appropriate material with the proper resiliency. There were a range of suitable materials disclosed in the prior art for forming the lumen of a hemostasis valve. For example, Schaffer discloses that the materials for the lumen can include "modified vinyl, silicone, polyurethane or a combination thereof," as well as modifications of those materials with "waxes and/or oils or un-cross-linked modifiers." Ex. 1005

(Schaffer) [0081]. Hartley discloses that "[p]referably the cylindrical diaphragm is formed from a resilient material so that after constriction and release of the flexible member the valve reopens" and further discloses that "[i]n a preferred form the cylindrical diaphragm of the valve may be constructed from a elastomeric material such as silicone rubber." Ex. 1006 (Hartley) at [0008], [0016]. Eller discloses a variety of sleeves made from "NuSil MED-4755, NuSil MED-4765, and NuSil MED-4014." Ex. 1007 (Eller) at 36:27-60. The components referred to as the "seal module" in Schaffer, the "cylindrical diaphragm" in Hartley, and the "sleeve" in Eller all correspond to the portion of the hemostasis valve that forms the central lumen of the valve. *See* Ex. 1005 (Schaffer) at [0049], [0051], [0054], [0075]; Ex. 1006 (Hartley) at [0031]; Ex. 1007 (Eller) at 11:60-64. Thus, the prior art would have provided a person of ordinary skill with a range of suitable options for selecting a suitable lumen material that was both deformable and possessed the resilience to return to its open state when constricting force is removed. For all of the above reasons, Schaffer in combination with Hartley renders claim 1 obvious.

iii. <u>Eller</u>

95. Eller also discloses a "filament." Eller discloses a hemostasis valve that includes "a housing 16, an actuator 18, a sleeve 20, [and] a first wire member 22":

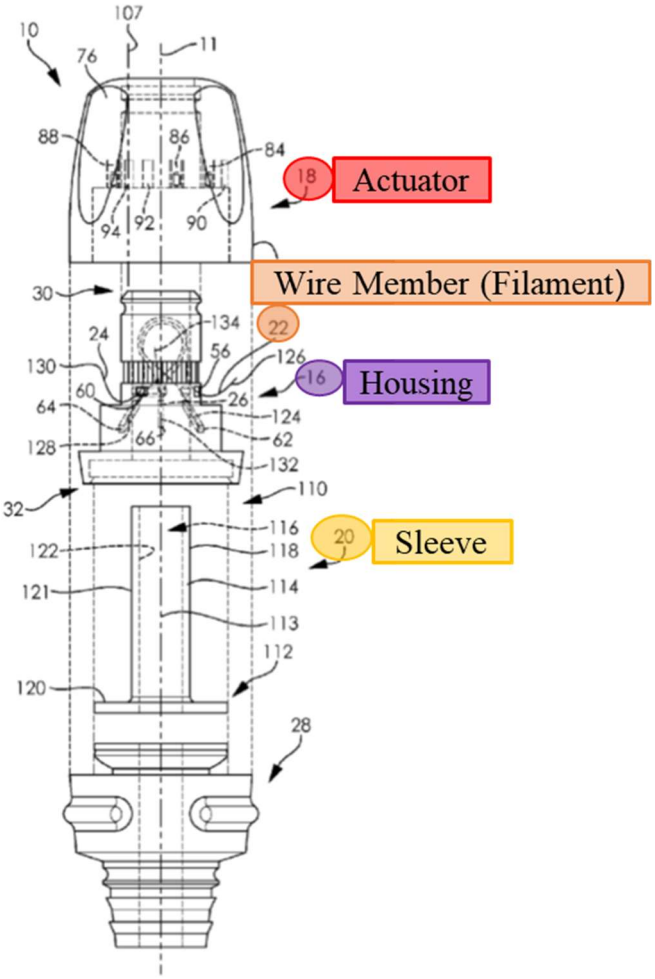

FIG. 2

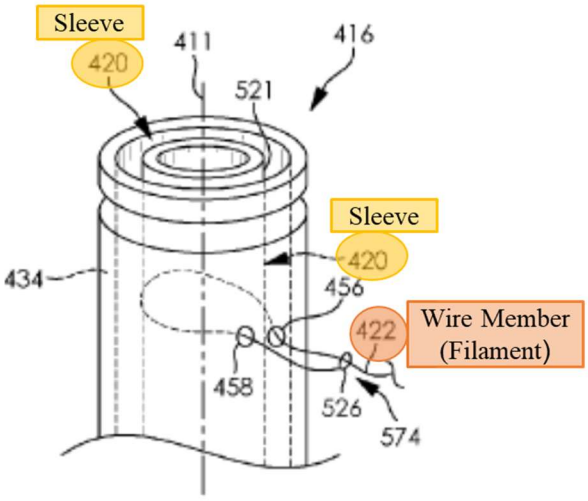

FIG. 16

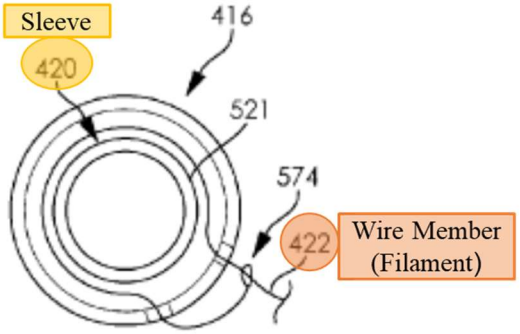

FIG. 17

Ex. 1007 (Eller) at 5:1-5, Figs. 2,[3] 16-17. Some of Eller's examples, such as Figure 2 above, include three wire members: a first wire member, a second wire member, and a third wire member. *See* Ex. 1007 (Eller) at 5:1-5, Figs. 2, 8-10. However, Eller also discloses that "a selective fluid barrier device can include any suitable number of wire members," including only one wire member. *Id.* at 16:7-19. Eller depicts examples having only one wire member in Figures 15-17 and 20-22. *Id.* at 21:37-22:31, 23:50-25:9, Figs. 15-17, 20-22. Thus, Eller's disclosure of examples having more than one wire member does not affect my opinions on whether the claims of the '921 patent are patentable.

96. Eller says that its wire member "can have any suitable structure and comprise any suitable number of strands and/or fibers that are twisted, or otherwise interconnected to one another" and can comprise, for example, "a suture or a cable." Ex. 1007 (Eller) at 15:61-16:6. The wire member "can have a cross-sectional configuration that is round, substantially round, rectangular, square, oval, and any other configuration considered suitable for a particular embodiment." *Id.* at 15:65-16:2. Eller's wire member is therefore a "filament" as claimed in the '921 patent because the wire member is at least one or more threads, lines, cords, rope, ribbon, flat wire, sheet, or tape.

---

[3] Eller's Figure 2 shows an exploded view of the device. Ex. 1007 (Eller) at 2:46-47. An un-exploded view is depicted in Figure 1. *Id.* at Fig. 1.

97. Eller's first wire member has a first end 124 attached to the housing 16 and a second end 126 attached to the actuator 18. Ex. 1007 (Eller) at 12:52-58. Eller discloses that first wire member extends from its first end attached to the housing 16 and "around a portion of the outer surface 121 of the sleeve 20" to the second end attached to the actuator 18. *Id.* at 12:58-64. Figure 21 below illustrates the arrangement of the wire member around the outer surface of the sleeve:

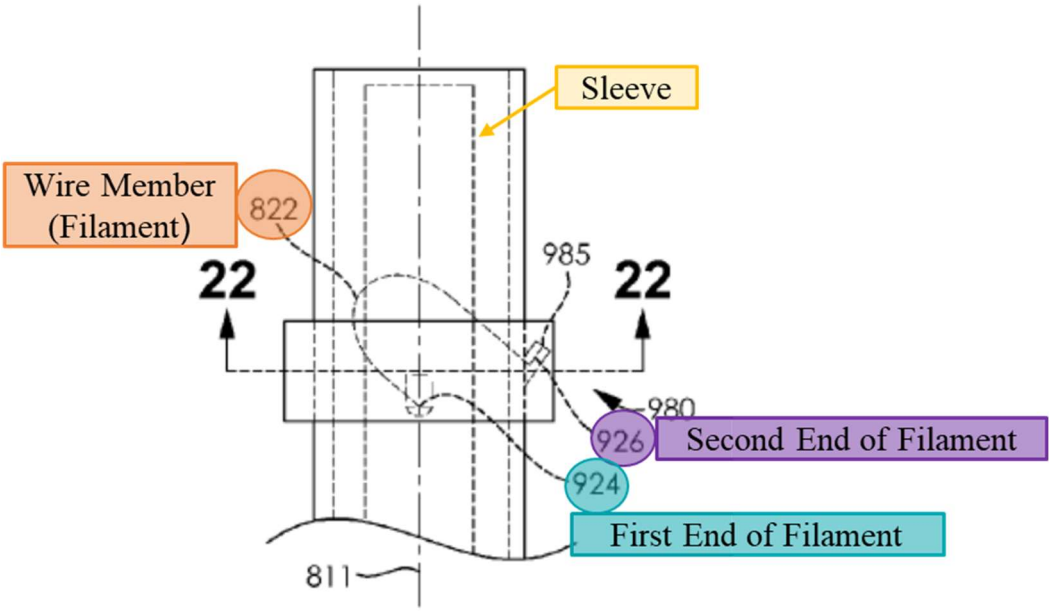

FIG. 21

Id. at 24:50-57, Fig. 21.

98. Eller's actuator and wire member are "movable between a first configuration and a second configuration." *Id.* at 15:21-25. Eller explains that in the first configuration, the actuator is rotated so that the wire member is in a relaxed state and fluid is permitted to flow through the sleeve. *Id.* at 15:21-40, 17:38-43. Then, when the actuator is rotated, the valve is moved to the second configuration

where the actuator places the wire member in a tensioned state, causing the wire member to constrict the sleeve and prevent fluid from passing therethrough. *Id.* at 15:21-40, 17:62–67. Figures 10A through 10C illustrate the valve transitioning from the first relaxed position (10A) to the second constricted position (10C):

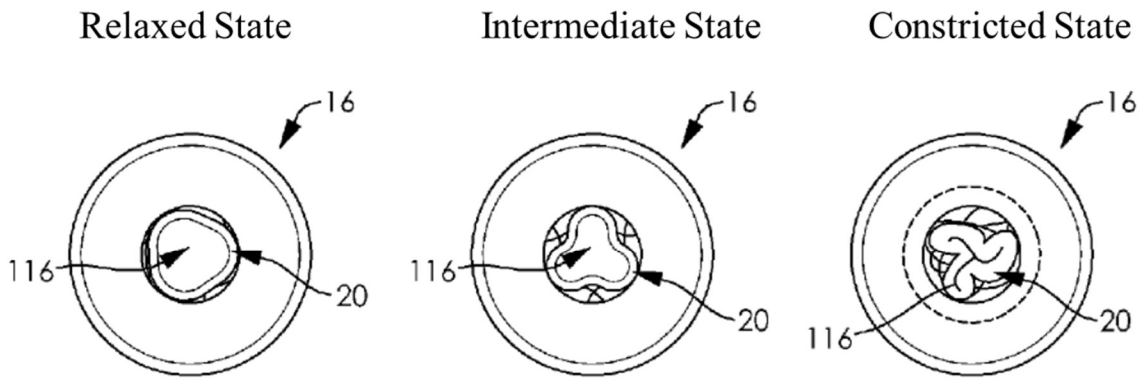

FIG. 10A **FIG. 10B** **FIG. 10C**

Id. at 15:21-40, Figs. 10A-10C. Eller also discloses that "when one or more medical devices are passed through the passageway 116 defined by the sleeve 20, the material that forms the sleeve 20 contacts a portion of one or more of the medical devices to close the passageway 116 such that fluid is prevented from passing through the passageway 116." *Id.* at 18:3-8.

99. A person of ordinary skill in the art would have found it obvious, and been motivated, to substitute Eller's wire member for Schaffer's U-shaped actuating members for several reasons. First, a person of ordinary skill in the art would have been motivated by Eller's description that the wire member can form a seal around one or more medical devices passed through the valve to prevent fluid

from leaking around the device. Ex. 1007 (Eller) at 15:21-40, 17:38-43, 18:3-8. A person of ordinary skill in the art would have also recognized that a stasis valve should seal and prevent leakage of fluid when a tool is inserted through the valve during a procedure. Thus, Eller's ability to seal around such devices would have been beneficial to a person of ordinary skill.

100. Second, like I explained previously with respect to Hartley's string (the discussion of which I incorporate herein), a person of ordinary skill in the art would have recognized that Eller's wire member may seal more effectively than Schaffer's metallic/plastic U-shaped actuating members when constricting the valve lumen. The compliancy of Eller's wire member would allow it to conform to a wider range of tools of varying diameters and shapes than Schaffer's U-shaped members. A person of ordinary skill in the art would have recognized that if a tool did not fit the size of Schaffer's U-shaped members, small gaps could form between the tool and the valve's lumen. However, a more compliant constricting mechanism, like Eller's wire member, could conform to the size and shape of a wider range of tools. Thus, Schaffer's valve combined with Eller's wire member may accommodate a wider range of tools/devices, which would have been a highly desirable feature to a person of ordinary skill in September 2017.

101. Third, the combination of Eller's wire member and Schaffer's valve would have merely entailed the substitution of one known element (Eller's wire

member) for another (Schaffer's U-shaped actuating members) and would have yielded the predictable results of constricting the central lumen of Schaffer's valve to form a seal. I do not see any significant issues that would have prevented a person of ordinary skill in the art from combining Eller's wire member with Schaffer's valve. The substitution would have been well within the level of ordinary skill in August 2018.

102. Fourth, as Schaffer recognizes, fluid stasis valves generally comprise "a resilient material in compression within a housing or clamping member." Ex. 1005 (Schaffer) at [0003]. As I explained previously with respect to the Schaffer-Hartley combination, there were a finite number of methods to compress the resilient material in a stasis valve in September 2017. Eller and Schaffer disclose two such methods – Eller's wire member and Schaffer's U-shaped actuating members. A person of ordinary skill in the art in September 2017 would have found it obvious to select either of these finite, predictable options. And as I explain below, they would have had a reasonable expectation of success in implementing them.

103. A person of ordinary skill in the art would have had reasonably expected success in substituting Eller's wire member for Schaffer's U-shaped actuating members for multiple reasons. First, Eller states that the "[a]ttachment between a wire member and a housing and/or actuator can be accomplished using

any suitable method or technique, and skilled artisans will be able to select a suitable method or technique to attach a wire member to a housing and/or an actuator according to a particular embodiment based on various considerations, including the material(s) that forms the wire member." Ex. 1007 (Eller) at 14:37-43. Eller then provides several exemplary ways to secure its wire member to an actuator, "including using adhesive, welding, fusing, providing a friction fit between the wire member and the … actuator, and any other method or technique considered suitable for a particular embodiment." *Id.* at 14:43-49. Eller's examples would have been common and predictable to a person of ordinary skill in the art in September 2017, and a person of ordinary skill would have reasonably expected success in securing Eller's wire member to Schaffer's actuator buttons using one or more of those methods. The demonstrative illustration that I provide below depicts a basic diagram of how this could be achieved. As shown, the first end of the wire member would be secured to the first actuator button, the wire member would loop at least once around the lumen of Schaffer's valve, and then the second end of the wire member would be secured to the second actuator button on the opposite side of the valve:

Demonstrative Illustration
Schaffer + Eller's Wire Member

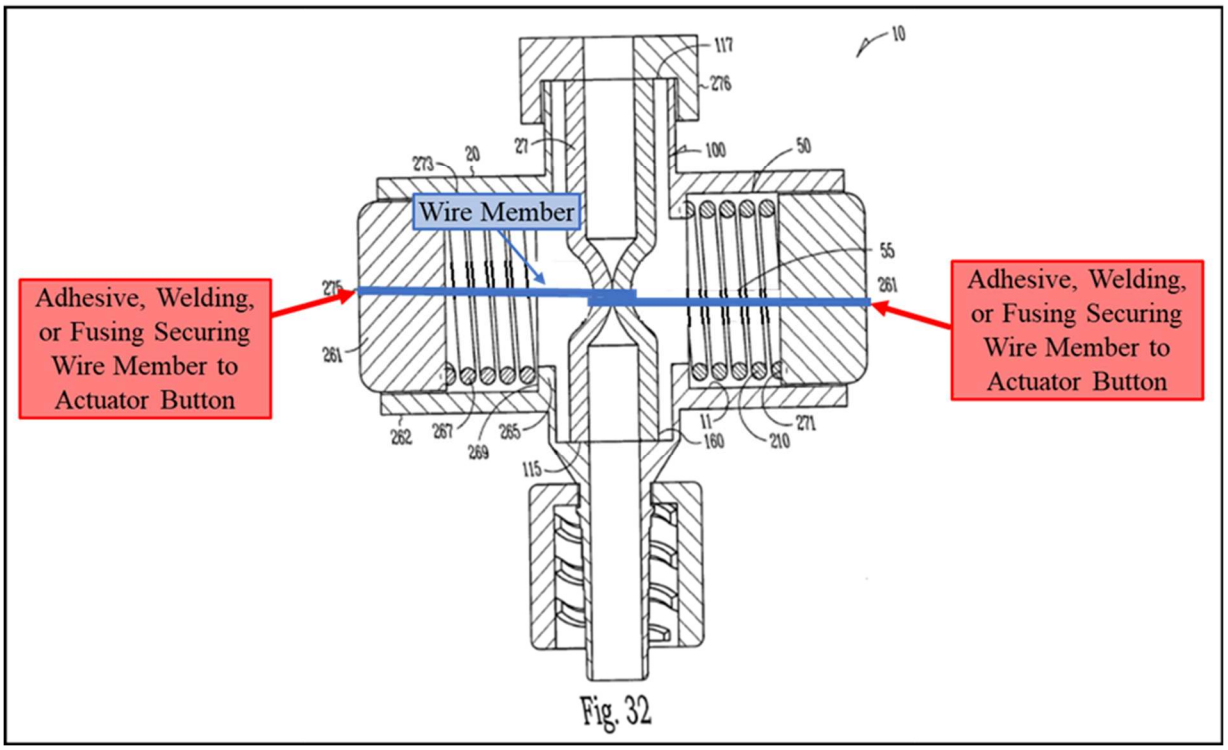

104. Second, Eller discloses that its wire member may be used with "any suitable actuator capable of moving the selective fluid barrier valve device between a first configuration and a second configuration" and that "[s]killed artisans will be able to select a suitable actuator to include on a selective fluid barrier valve device according to a particular embodiment based on various considerations, including the number of wire members included in the selective fluid barrier valve device and/or the structural arrangement of the housing." *Id.* at 8:27–39. Eller discloses that suitable actuators include "rotatable actuators, **linear actuators**, **slidable actuators**, pivotable actuators, levers, and any other actuator considered suitable for a particular embodiment." *Id.* at 8:39–44 (emphasis added). A person of

ordinary skill in the art would have understood that Schaffer's actuator is an example of a linear and slidable actuator. *See* Ex. 1005 (Schaffer) at [0076]-[0077]. Thus, Eller's disclosure regarding the wide range of actuators suitable for use with its wire member would have reinforced the person of ordinary skill in the art's reasonable expectation that Eller's wire member could be successfully combined with Schaffer's actuator buttons.

105. Third, a person of ordinary skill in the art would have recognized that Eller's wire member and Schaffer's U-shaped actuating members use similar mechanisms to compress and seal the central lumen of the valve. Eller's wire member seals the valve when the actuator is placed in the second position, which creates tension in the wire member and causes the wire member to constrict the sleeve, as illustrated in Figures 10A-10C below:

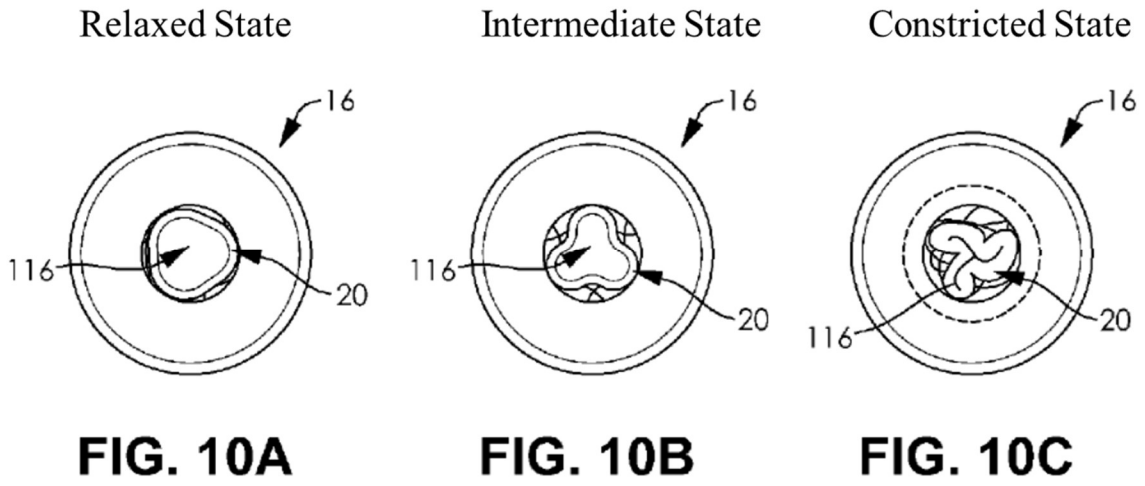

Ex. 1007 (Eller) at 15:21-40, 17:47-18:3, Figs. 10A-10C. Schaffer's U-shaped actuating members seal the central lumen when the U-shaped actuating members constrict and collapse the containment structure, as illustrated in Figure 32:

Constricted State

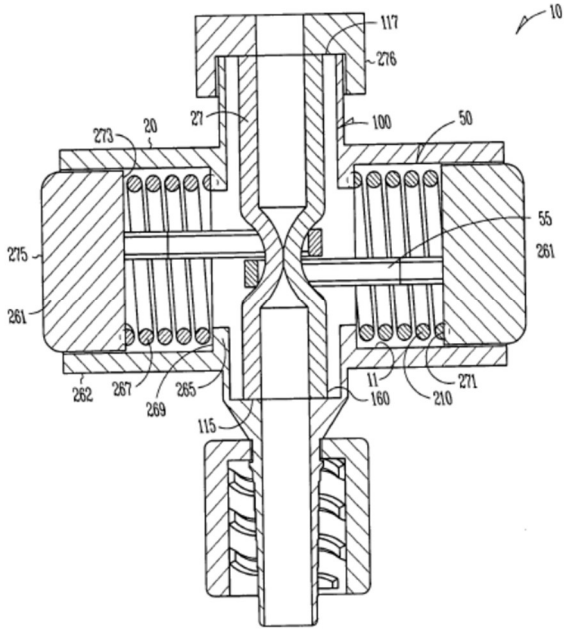

Fig. 32

Ex. 1005 (Schaffer) at [0077], Fig. 32. Thus, both Eller and Schaffer seal the central lumen of the valve by causing the wire/actuating members to constrict and compress the central lumen of the valve. *See* Ex. 1005 (Schaffer) at [0077]; Ex. 1007 (Eller) at 15:21-40, 17:47-18:3.

106. In view of the similarities between Eller and Schaffer's valves, a person of ordinary skill in the art would have expected that Eller's wire member would serve as a reasonable, if not superior, substitute for the U-shaped actuating members. For example, in a first position Schaffer's undepressed actuator buttons

would pull the wire member in opposing directions, placing tension on the wire member. *See* Ex. 1005 (Schaffer) at [0077]; Ex. 1007 (Eller) at 15:21-40, 17:47-18:3. This would cause the wire member to constrict and collapse the lumen of Schaffer's containment structure, sealing the valve. Then, when Schaffer's actuator buttons are depressed and moved to the second position, the compressive forces from the springs would be relaxed, relieving the tension on the wire member, and causing the wire member to loosen around the central lumen so that the lumen least partially opens. *See* Ex. 1005 (Schaffer) at [0077]; Ex. 1007 (Eller) at 15:21-40, 17:47-18:3. Schaffer discloses that the seal module is formed from a "highly deformable, non-compressible material 166 (e.g., plastic)" and is "configured to maintain an open lumen 193 when no compressive force 67 is applied." Ex. 1005 (Schaffer) at [0054].) A person of ordinary skill in the art would have therefore expected that Schaffer's lumen would have the resilience to return to open configuration when the actuator buttons are pressed inwardly, and the tension on the wire member is released such that "no compressive force [] is applied" to the lumen." (*Id.*) Further, as I explained with respect to the Schaffer-Hartley ground, if the resiliency of Schaffer's lumen required adjustment to function with Eller's wire, a person of ordinary skill in the art would have possessed the skills and knowledge to select an appropriate material with the proper resiliency. *Supra* ¶94. These similarities between Eller's wire member and Schaffer's U-shaped actuating

members would have reinforced a person of ordinary skill in the art's reasonable expectation that Eller's wire member could be successfully implemented in Schaffer's valve. For all of the above reasons, Schaffer in combination with Eller renders claim 1 obvious.

4. <u>Biasing Member</u>

107. Claim 1 finally recites that the hemostasis valve comprises "a biasing member configured to bias the actuator to the first position." Schaffer discloses this limitation.

108. Schaffer's hemostasis valve includes "two resilient members 267 (e.g., spring 210) disposed within the actuating member 55":

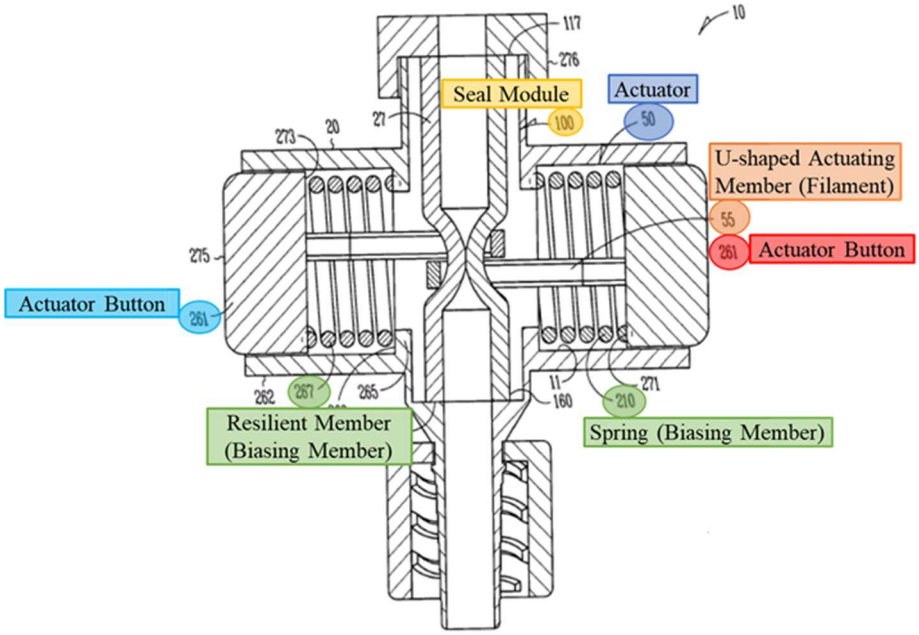

Fig. 32

Ex. 1005 (Schaffer) at [0077], Fig. 31. Schaffer's resilient members/springs are each a "a biasing member configured to bias the actuator to the first position."

109. Schaffer's springs bias the actuator buttons toward the first (i.e., sealed) position by imposing a force on the actuator buttons when the buttons are undepressed. *Id.* at [0077]. The force supplied by the springs cause the actuating members coupled to the buttons to collapse and seal the seal module, preventing the flow of fluid through the valve. *Id.* The system remains biased towards this sealed stated until the actuator buttons are depressed, which relieves the force applied by the springs:

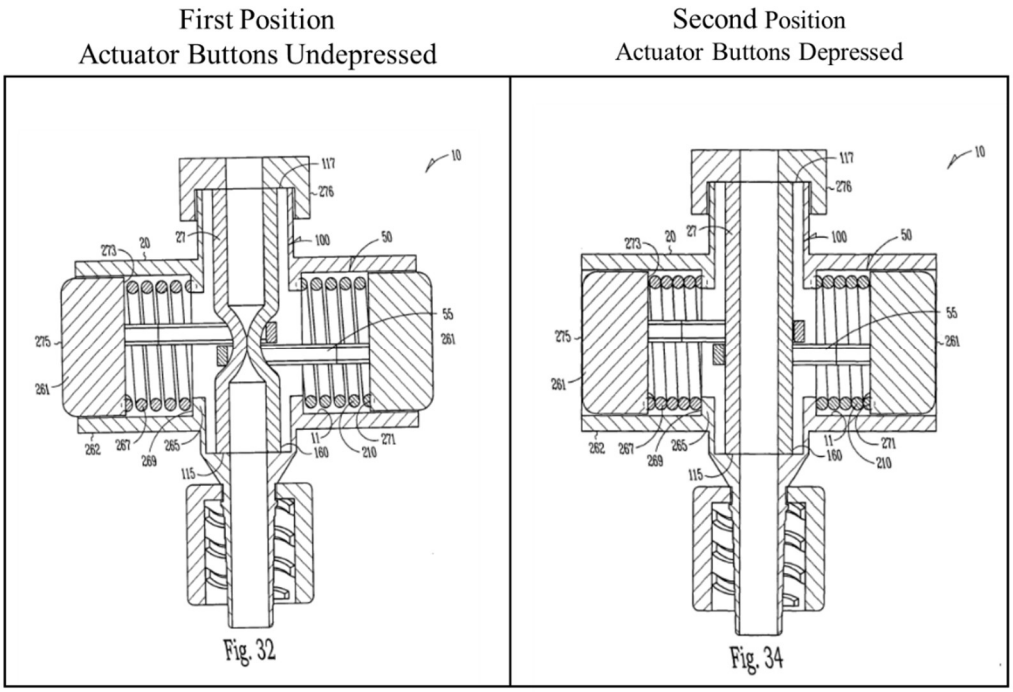

Id. at [0077], Figs. 32, 34.

B. Claim 2

110. Claim 2 recites: "The valve of claim 1 wherein the elongate member is pliable." Schaffer anticipates claim 2 or renders claim 2 obvious alone or in view of Hartley ***or*** Eller.

111. Schaffer discloses that the seal module 100 (i.e., the elongate member) "includes a flexible, elongate tubular structure 101 having an outer wall 27 which includes a material 166 that is highly elastic, deformable, compliant and yet virtually non-compressible." Ex. 1005 (Schaffer) [0054]. A "highly elastic, deformable, [and] compliant" material would be pliable. Thus, Schaffer's elongate member is pliable.

C. Claim 3

112. Claim 3 recites: "valve of claim 1 wherein the filament extends in a loop around the elongate member." Schaffer anticipates claim 3 or renders claim 3 obvious alone in view of Hartley ***or*** Eller.

1. Schaffer

113. Schaffer discloses that the actuating members are "at least partially circumferencially [sic] disposed about the portion 108 of the seal module 100." Ex. 1005 (Schaffer) at [0076]. As shown in Figure 31 below, the actuating members collectively encircle the seal module 100 to form a loop thereabout:

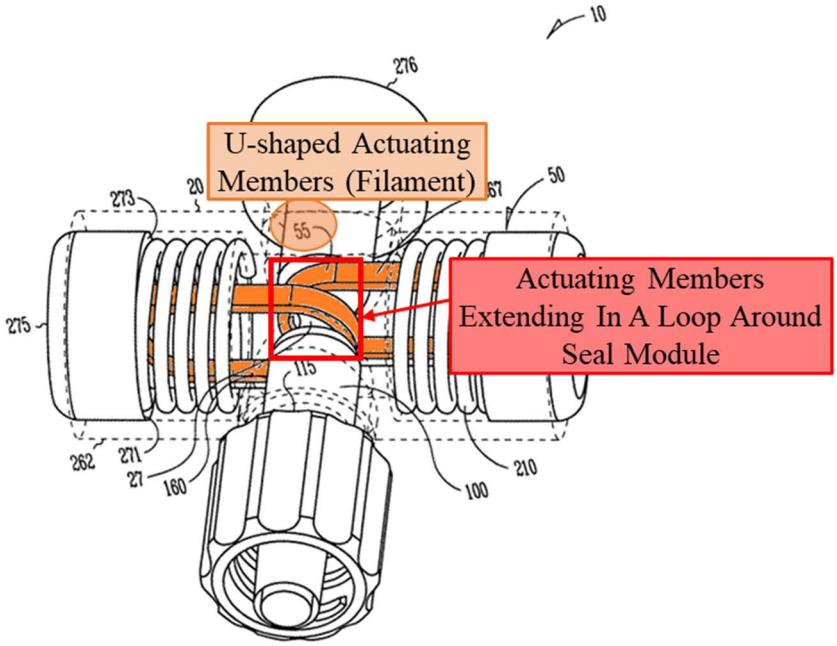

Fig. 31

Id. at Fig. 31. The graphic below illustrates how Schaffer's U-shaped actuating members form a loop around the lumen:

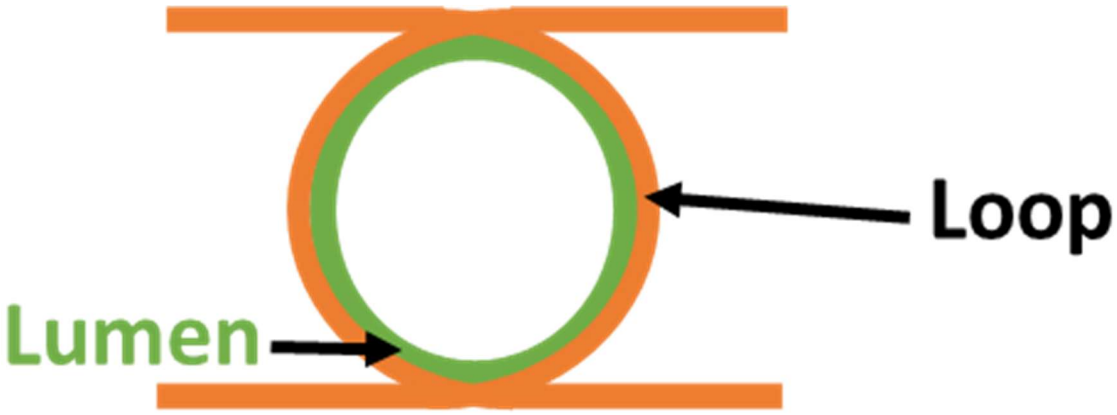

114. This arrangement is similar to the arrangement of the filament depicted in Figures 8 and 9 of the '921 patent (shown below). That Schaffer depicts two actuating members that collectively form a loop around the elongate member is of no moment here. The '921 patent discloses that the "***the filament 150*** can comprise

multiple filaments," including filaments (150-A and 150-B) forming two U-shaped sections:

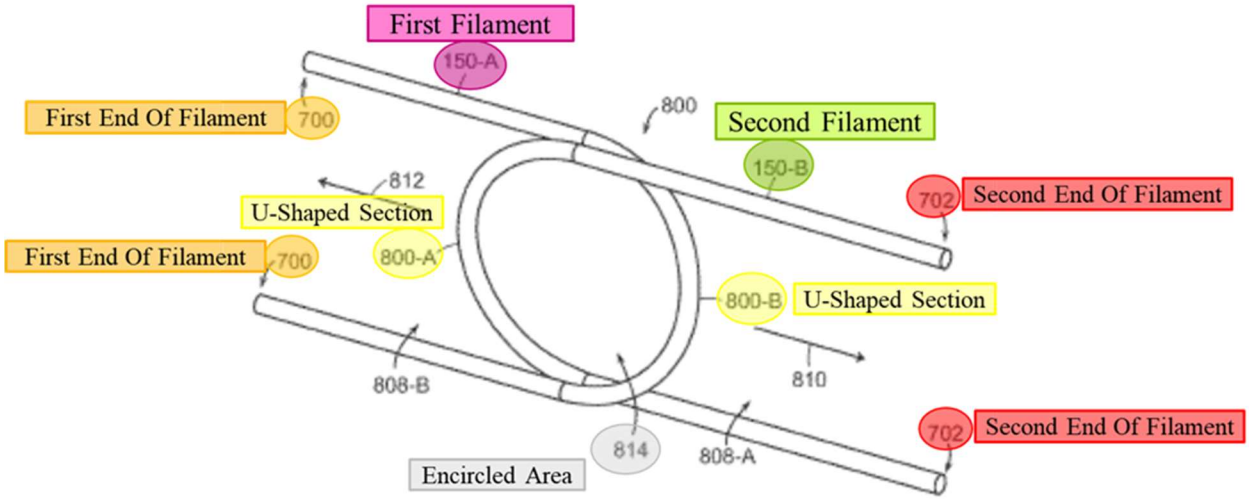

FIG. 8

Ex. 1001 ('921 patent) at Figs. 8-9. Accordingly, Schaffer's U-shaped actuating members collectively constitute a "filament" as claimed in the '921 patent. The '921 patent also explains that this configuration forms "an encircled area 814, also referred to herein as a constricting area 814" and that the "elongate member 132 can be received within the encircled area 814." *Id.* at 13:50-65. Thus, the "encircled area" forms a loop around the elongate member 132. Schaffer's actuating members form a similar loop aroudn the seal module (elongate member).

2. <u>Hartley</u>

115. Schaffer combined with Hartley also renders this claim obvious. Hartley discloses that its string "is wound preferably twice around the cylindrical diaphragm" as shown in Figure 3 below:

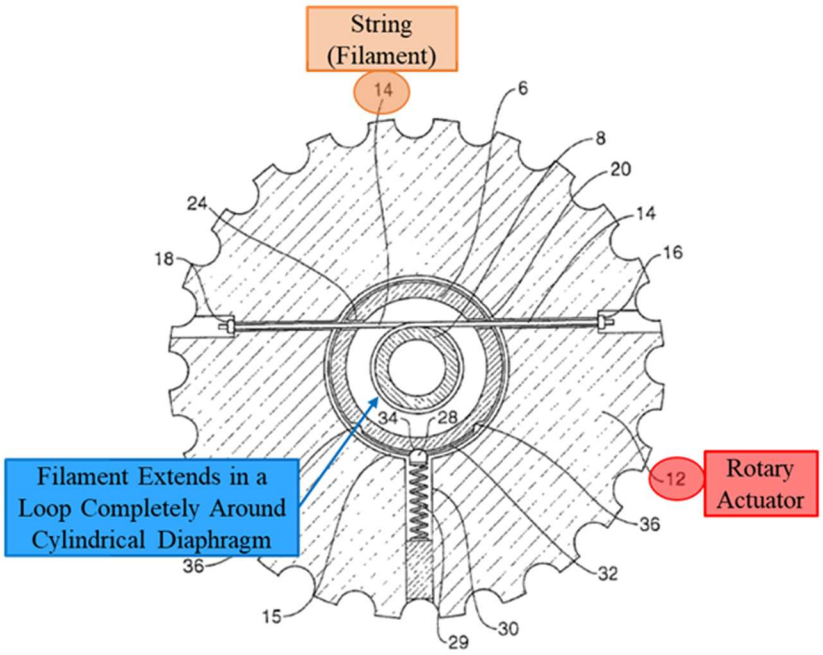

Fig 3

Ex. 1006 (Hartley) at [0031], Fig. 3. Hartley's string therefore "extends in a loop around the elongate member." *Id.*

116. A person of ordinary skill in the art would have been motivated to loop Hartley's string around Schaffer's tubular member when replacing Schaffer's U-shaped actuating members with Hartley's string. Hartley discloses that looping the string around the tubular member is the preferred configuration for its string and that such a configuration "will close over a range of diameters of devices passed through the valve or can close completely down to be self sealing." Ex. 1006 (Hartley) at [0031], [0037]. This description of the benefits of the configuration would have motivated a person of ordinary skill in the art to use the same configuration when implementing Hartley's string in Schaffer's valve.

117. A person of ordinary skill in the art would have reasonably expected success in winding Hartley's string around Schaffer's tubular member. As I explained in Claim 1 above, the mechanism of action of Schaffer's and Hartley's valves are similar. *Supra* ¶91. Basically, the valves are designed to pull the ends of the filaments to close the valve. The buttons/springs in Schaffer's valve would both pull the ends of Hartley's string in opposite directions to tighten the string around the tubular member. A person of ordinary skill in the art would have possessed the necessary skills to adjust the spring force and/or the resilience of the seal module so that Schaffer's valve operated effectively with Hartley's string.

3. <u>Eller</u>

118. Schaffer combined with Eller also renders this claim obvious. Eller discloses that some versions of its valve "can include a single wire member that is disposed around more than 75% of the outer surface of the sleeve or that is disposed around more than 100% of the outer surface of the sleeve. For example, the wire member can be positioned such that it extends at least one full revolution around the outer surface of the sleeve." Ex. 1007 (Eller) at 22:18-24. In a configuration where the wire member is "positioned such that it extends at least one full rotation around the outer surface of the sleeve," the wire member "extends in a loop around the elongate member." *Id.*

119. A person of ordinary skill in the art would have been motivated to use the looped configuration for Eller's wire member when replacing Schaffer's U-shaped actuating members with Eller's wire member. A person of ordinary skill in the art would have recognized that looping the wire member around the entire circumference of Schaffer's seal module would maximize the constrictive seal of the wire member around Schaffer's seal module and any tools inserted therethrough because it would ensure that the entire outer circumference of tools would be constricted against the seal module, eliminating any gaps that might otherwise exist.

120. A person of ordinary skill in the art would have reasonably expected success in looping Eller's wire member around Schaffer's seal module much for the same reasons the person would have expected success looping Hartley's string around Schaffer's seal module. The mechanisms of action are similar between Schaffer and Eller – namely, pulling the ends of the filament in opposite directions to close the tubular member. A person of ordinary skill in the art would have expected Eller's wire member to close around the seal module when Schaffer's springs exert force on the wire member.

D. <u>Claim 4</u>

121. Claim 4 recites: "The "valve of claim 1 wherein the actuator is a button, wherein the button is undepressed in the first position, and wherein the

button is depressed in the second position." Schaffer anticipates claim 4 or renders claim 4 obvious alone or in view of Hartley ***or*** Eller.

122. As I explained for Claim 1 previously, Schaffer's valve includes two spring-loaded actuator buttons 261 that are "movable from a first position to a second position on opposing sides of the housing":

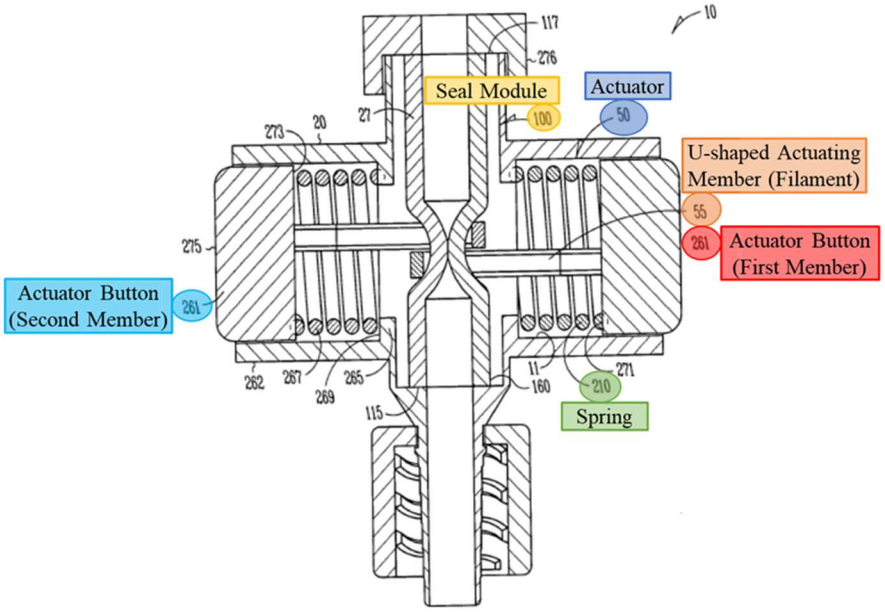

Fig. 32

Ex. 1005 (Schaffer) at [0075]-[0076], Figs. 31-32. Schaffer discloses that the actuator buttons are undepressed when the valve is in the first (closed) position, shown in figure 32 below, and are depressed when the valve is in the second (open) position, shown in Figure 34 below:

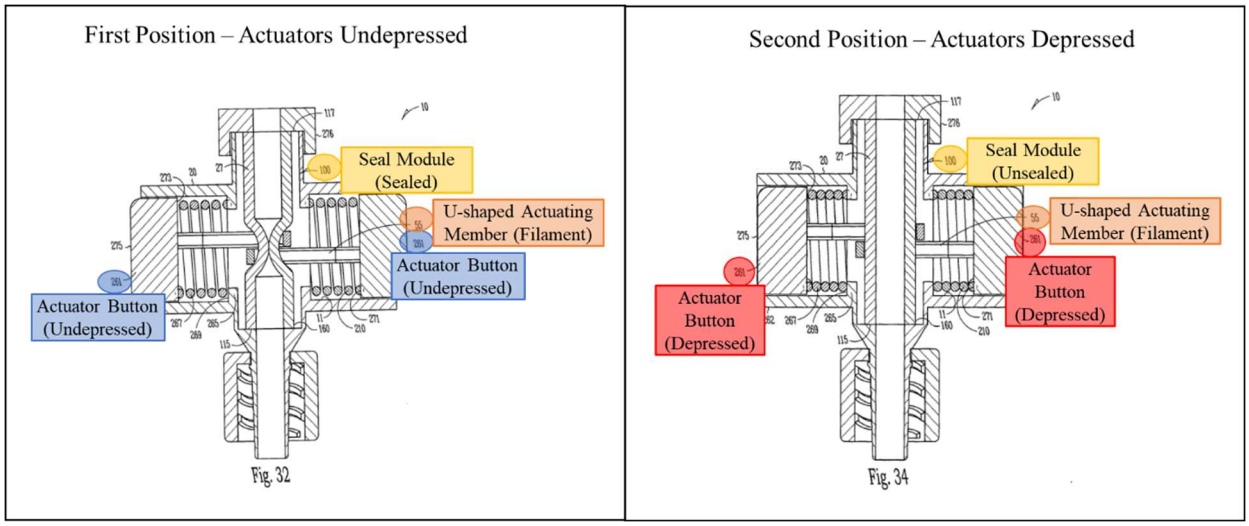

Id., [0077], Figs. 32, 34. This is the same configuration disclosed for the first position and second position of the hemostasis valve in the '921 patent:

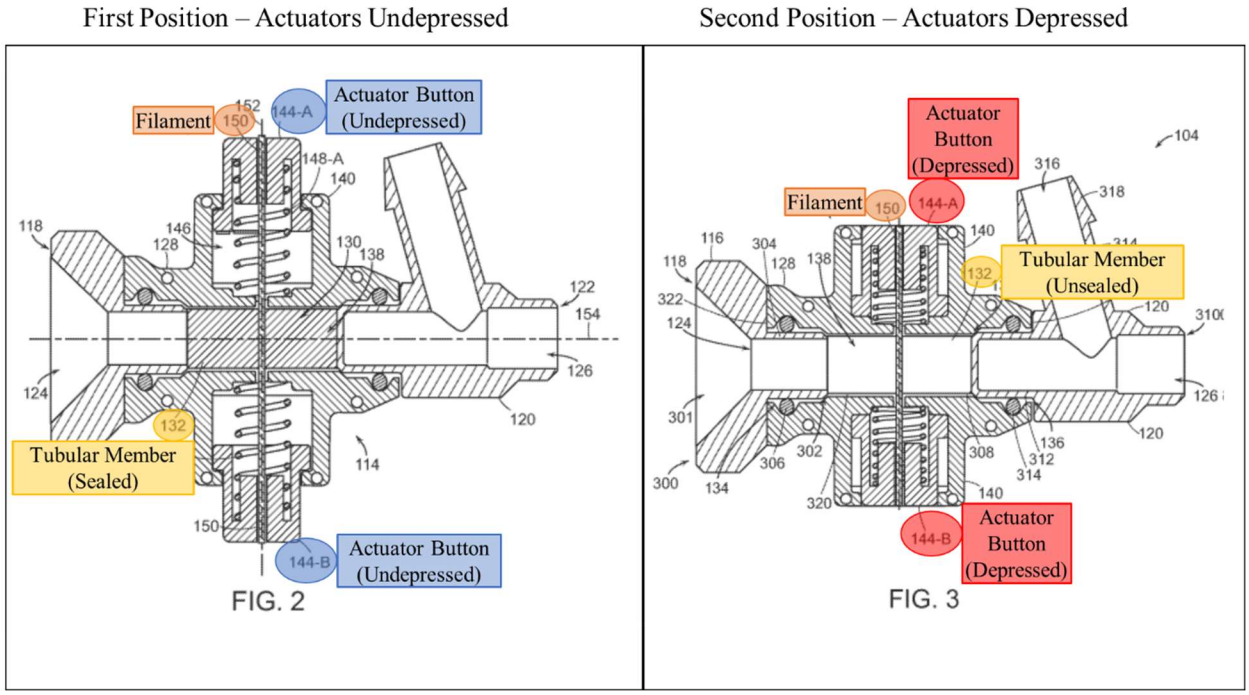

Ex. 1001 ('921 patent) at Figs. 2-3.

E. <u>Claim 5</u>

123. Claim 5 recites: "The valve of claim 1 wherein, when the actuator is in the first position, the lumen is configured to remain constricted and sealed when a pressure differential exists between (a) a first volume outside the lumen and adjacent to a first end of the elongate member and (b) a second volume outside the lumen and adjacent to a second end of the elongate member." Schaffer anticipates claim 5 or renders claim 5 obvious alone or in view of Hartley ***or*** Eller.

124. As an initial matter, I note that Claim 5 merely requires that the valve is configured to remain sealed when "a pressure differential exists" between a volume outside the first end of the elongate member and a volume outside the second end of the elongate member. In other words, Claim 5 encompasses ***any*** level of pressure differential between the first and second ends of the tubular member. A person of ordinary skill in the art would have recognized that such a pressure differential would necessarily exist between the outside of the first end of a catheter and the second end the catheter during any procedure where the catheter is inserted into a patient's vasculature. That is because the patient's blood pressure is higher than the air pressure outside of the patient's body. Indeed, the difference in pressure is the primary reason that hemostasis valves are necessary to prevent the patient's blood from leaking through the catheter once it is inserted into the vasculature. Accordingly, a person of ordinary skill in the art would have

understood that any hemostasis valve for intravascular procedures must remain constricted and sealed when such a pressure difference exists. Notably, Schaffer, Hartley, and Eller all disclose that their hemostasis valves are intended for intravascular procedures, as I explain below.

1. <u>Schaffer</u>

125. Schaffer's discloses that its patent application relates to "a composite fluid-stasis valve for use with catheters" such as the catheters disclosed in U.S. Patent No. 5,429,616 ("Schaffer '616") which Schaffer incorporates by reference. Ex. 1005 (Schaffer) at [0002]. Schaffer '616 discloses "catheters for venous or arterial cannulation, which are inserted into a blood vessel." Ex 1009 (Schaffer 616) at 1:1-9; *see also id.* at Abstract. Thus, Schaffer's hemostasis valve is intended for use with catheters inserted into a patient's blood vessels and "blocks the flow of gas or fluid completely and immediately with or without an instrument in place within the gas/fluid path" during those procedures. Ex. 1005 (Schaffer) [0008]. A person of ordinary skill in the art would have recognized that for Schaffer's valve to fulfill its purpose, the valve remains sealed when a pressure differential exists between the first end (i.e., adjacent the proximal end of a catheter inserted into the patient and subject to intravascular pressure) and second end (i.e., subject to air pressure) of the elongate member.

Second End Subject to Air Pressure

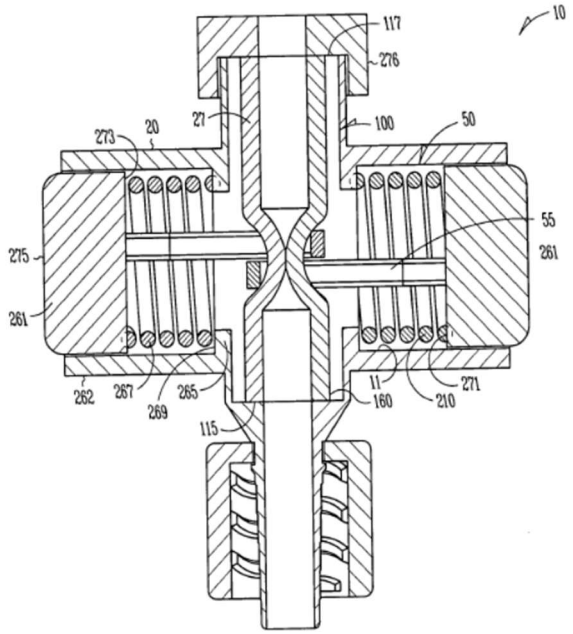

Fig. 32

First End Subject to Blood Pressure

Id. at [0075], Fig. 32.

126. Schaffer also discloses that when the actuator buttons are undepressed (i.e., in the first position), "the actuating members 55 of the actuators 50 are, in one option, disposed and at least partially circumferencially [sic] disposed about the portion 108 of the seal module 100 depressing and at least partially collapsing a portion 108 of the containment structure 160 by a compressive force 67 (e.g. by a spring 210)" so that the "lumen 193 of the third seal member 165 is at least partially collapsed by the compressive force 67":

First Position – Actuator Buttons Undepressed

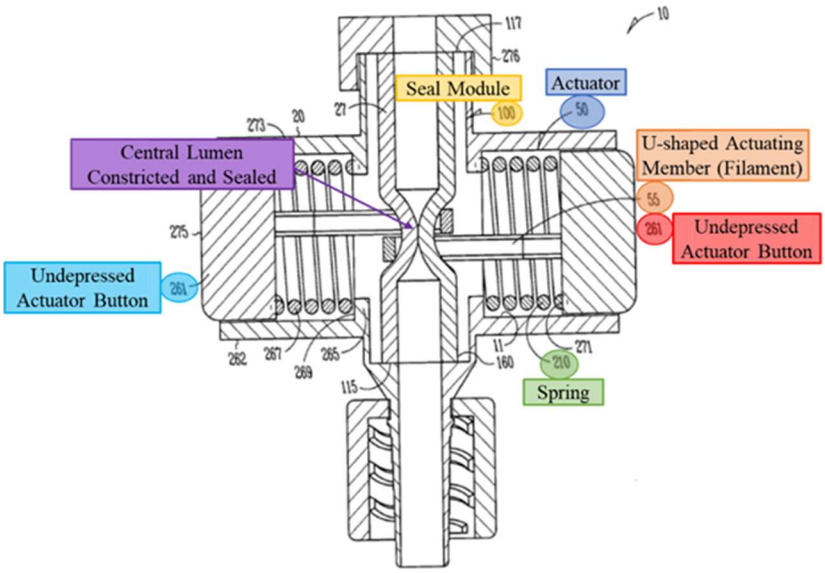

Fig. 32

Ex. 1005 (Schaffer) at [0077], Figs. 31-32. Thus, in the first position, Schaffer's valve is constricted to form a seal that prevents fluid or gas from passing through the valve. Schaffer then discloses that the valve is unsealed when the actuator buttons are depressed into the second position, which disengages the actuating members from the tubular member:

Second Position – Actuator Buttons Depressed

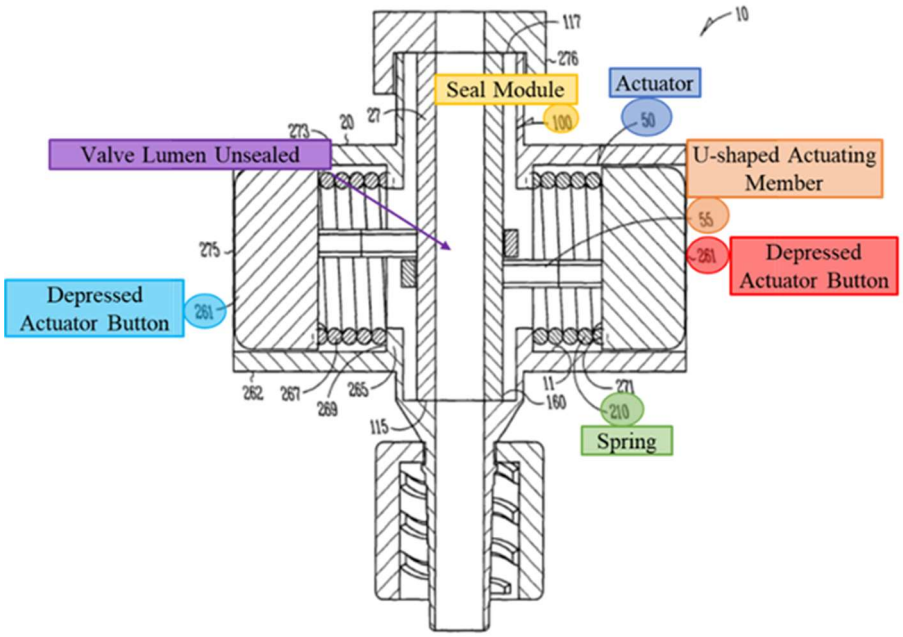

Fig. 34

Id. at [0077], Figs. 33-34.

127. Accordingly, a person of ordinary skill in the art would have recognized that Schaffer's valve is configured to remain sealed so long as the actuator buttons are in the first, undepressed position. That would have included situations where a pressure differential existed between the distal and proximal ends of the lumen, such as during an intravascular procedure. Schaffer's disclosure that its valve is intended to "block[] the flow of gas or fluid completely and immediately" during intravascular procedures confirms that understanding, as do Schaffer's descriptions on the sealed state of the valve when the actuator buttons are in the first (undepressed) position. *Id.* at [0008], [0077].

128. Moreover, if a person of ordinary skill in the art found that Schaffer's valve did not maintain its seal when a pressure differential existed, the person of ordinary skill would have found it obvious to adjust Schaffer's valve to ensure that it could maintain a seal in the presence of a pressure differential – after all, maintaining a seal in such conditions is the purpose of a hemostasis valve. For example, the person of ordinary skill in the art had several simple options to adjust the seal, including adjusting Schaffer's spring strength to apply additional force to seal the valve, adjusting the resilience and compressibility of the seal module that forms the valve's lumen, or adjusting the shape, flexibility, mechanical properties, and/or dimensions of the U-shaped actuating members to more closely conform to the shape of the seal module and any tool(s) inserted through the valve. A person of ordinary skill in the art would have been motivated to do so because the purpose of Schaffer's hemostasis valve is to prevent leakage when a catheter or medical device is inserted into a patient, which would necessarily involve a pressure differential. A person of ordinary skill in the art would have reasonably expected success in adjusting the spring strength to exert more tension on the filament by, for example, changing the spring material or adjusting the springs coils. Springs are simple, predictable mechanical devices that would have been well understood by a person of ordinary skill in the art in September 2017. As I explained previously, a person of ordinary skill in the art would have reasonably expected success in

selecting an appropriate material for the seal module in view of the range of suitable seal module materials disclosed in the prior art.

129. To the extent it was necessary, a person of ordinary skill in the art would have also found it obvious to modify the U-shaped actuating members to maintain a seal in the presence of a pressure differential. Schaffer discloses that the actuating members are "at least partially circumferencially [sic] disposed about the portion 108 of the seal module 100." Ex. 1005 (Schaffer) at [0077]. The phrase "at least partially circumferencially [sic] disposed" strongly suggests that the U-shaped actuating members can also be ***completely*** circumferentially disposed around the seal module. A person of ordinary skill in the art would have been motivated to configure the U-shaped actuating members to circumferentially constrict the lumen to form a better seal and avoid any potential gaps I discussed previously. The required adjustments, to the extent any adjustments were needed, would have been simple, including modifying the shape, material, mechanical properties, and/or dimensions of the U-shaped actuating members to better conform to the cylindrical shape of the seal module. For example, the actuating members could be formed from a thin, flexible sheet or flat ribbon of metal or plastic so that they have the flexibility to conform to the outer surface of the cylindrical seal module. A person of ordinary skill in the art would have reasonably expected success in making these simple and routine adjustments. Actuating members with this type of structure and

flexibility would circumferentially constrict the lumen of Schaffer's seal module when pulled in opposite directions by the actuator buttons and would be able to maintain a seal even in the presence of a pressure differential.

2. <u>Hartley</u>

130. A person of ordinary skill in the art would have reasonably expected that Schaffer's valve would be configured to maintain its sealed state in the presence of a pressure differential when the U-shaped actuating members are replaced with Hartley's string. Like Schaffer, Hartley's valve is intended for use during intravascular procedures, where such a pressure differential will necessarily exist. Hartley explains that its valve is intended to "permit[] [a] catheter or other instrument to be passed through the access valve and the valve to form a seal against the walls of the catheter or other instrument to prevent loss of blood or other fluid." Ex. 1006 (Hartley) [0003]. To do so, Hartley's valve must be configured to maintain the seal in the presence of a pressure differential. *Supra* ¶124. Hartley also discloses that "[d]epending on how much the flexible member [i.e., string] is pulled radially and/or tangentially the cylindrical diaphragm can be completely constricted to prevent fluid flow through the valve or can be constricted to the extent that it closes around an instrument, for instance a catheter, passed through the valve." Ex. 1006 (Hartley) at [0006].

131. In view of Hartley's disclosures and Schaffer's disclosures that I discussed in the preceding section, a person of ordinary skill in the art would have reasonably expected that Hartley's string would constrict and seal the lumen of Schaffer's stasis valve during an intravascular procedure. Accordingly, a person of ordinary skill in the art would have reasonably expected that Hartley's string would maintain Schaffer's tubular member in a constricted and sealed state when Schaffer's actuator buttons are in the first, undepressed position, even when a pressure differential exists between the proximal and distal ends of the lumen.

132. In addition, to the extent Schaffer's valve and Hartley's string did not maintain its seal when a pressure differential existed, a person of ordinary skill in the art would have found it obvious to adjust Schaffer's spring strength to apply additional force to seal the valve, adjust the resilience of Schaffer's seal module, and/or adjust Hartley's string to improve the sealing of the valve for the reasons I explained previously with respect to Schaffer.

3. <u>Eller</u>

133. A person of ordinary skill in the art would have reasonably expected that Schaffer's valve would be configured to maintain its sealed state in the presence of a pressure differential when the U-shaped actuating members are replaced with Eller's wire member. Like Schaffer's valve, Eller's hemostasis valve is intended for use in procedures "that require the percutaneous insertion of one or more

interventional devices into a bodily passage, such as a portion of the vascular system." Ex. 1007 (Eller) at 1:20-23. Eller's valve is designed to prevent the flow of fluid through the central sleeve when the actuator is in the second (closed) position, causing the wire member to constrict the sleeve and create a seal. *Id.* at Abstract, 12:14-17, 15:21-40, 17:47-18:8, Figs. 10A-10C. Thus, a person of ordinary skill in the art would have recognized that Eller's valve is configured to remain sealed when placed in the second (closed) position during an intravascular procedure, when a pressure differential would exist between the first and second ends of the lumen.

134. Eller also describes a quantitative analysis performed on different versions of its valve having six different sleeve materials "included in a selective fluid barrier valve device that was constructed to be similar to the embodiment illustrated in" Figures 1-10C. *Id.* at 36:46-53. Eller explains that the valves were "attached to a gravity flow rig and pressurized for 30 seconds per test at a pressure of 2.9 PSI +/- 0.1 PSI (e.g., systolic pressure)" and were measured for fluid leak "in the second configuration with no device disposed through the sleeve passageway and with the devices described in the table disposed through the sleeve passageway." *Id.* at 36:53-60. A person of ordinary skill in the art would have understood that Eller's described test setup would have created a pressure differential between the first and second ends of the valve's lumen.

135. Eller discloses the results of the testing in the following table:

Material of Sleeve	Empty Sleeve Passageway	0.018"Wire disposed within sleeve passageway	0.035" Wire disposed within sleeve passageway	14 French dilator disposed within sleeve passageway	Rating:
80% - 4755 20% - 4765	3 g	5.4 g	50 g	4.9 g	+
100% - 4755	14.3 g	2.8 g	25.4 g	11 g	+
90% - 4755 10% - 4014	0	0	1.4 g	0	++
80% - 4755 20% - 4014	0	0	0	0	++++
70% - 4755 30% - 4014	0	0	0	0	++++
60% - 4755 40% - 4014	0	0	Trace	0	+++

Id. at 36:26-44. As reported in the table above, two of the six valves demonstrated no leaks regardless of the tool inserted through the valve, and one of the six devices demonstrated only trace leakage when a 0.035" wire was placed within the passageway. *Id.* at 36:64-37:3. Moreover, four of the valves reported no leaks when the sleeve passageway was empty, filled with a .018" wire, and filled with a 14 French dilator. These test results confirm that Eller's wire member is suitable for constricting and sealing the lumen of a stasis valve, even when a pressure differential exists between the proximal and distal ends of the lumen.

136. In view of Eller's disclosures and Schaffer's disclosures that I discussed previously, a person of ordinary skill in the art would have reasonably expected that Eller's wire member would constrict and seal the lumen of Schaffer's stasis valve during an intravascular procedure. Accordingly, a person of ordinary

skill in the art would have reasonably expected that Eller's wire member would maintain Schaffer's elongate member in a constricted and sealed state when Schaffer's actuator buttons are in the first, undepressed position, even when a pressure differential exists between the proximal and distal ends of the lumen, with or without devices inserted through the valve.

137. In addition, to the extent Schaffer's valve and Eller's wire member do not maintain a seal when a pressure differential exists, a person of ordinary skill in the art would have found it obvious to adjust Schaffer's spring strength to apply additional force to seal the valve, adjust the resilience of Schaffer's seal module, and/or adjust Eller's wire member to improve the sealing of the valve for the reasons I explained previously with respect to Schaffer.

F. <u>Claim 6</u>

138. Claim 6 recites: "The valve of claim 1 wherein, when the actuator is in the first position, the lumen is configured to remain constricted and sealed when vacuum pressure is applied to a volume outside the lumen and adjacent to either a first end or a second end of the elongate member." Schaffer anticipates claim 6 or renders claim 6 obvious alone or in view of Hartley ***or*** Eller.

139. As I explained previously for Claim 5, Schaffer, Hartley, and Eller all disclose hemostasis valves that create a seal to prevent the leakage of blood or fluid during intravascular medical procedures. Schaffer further discloses that its valve is

configured to connect to "a fluid or gas delivery system or device such as a syringe, or intravenous system or the like." Ex. 1005 (Schaffer) at [0049]. A person of ordinary skill in the art in September 2017 would have understood that syringes could be used to generate negative pressure for aspiration. *See e.g.,* Ex. 1011 (Garrison) at [0071] ("The flow line 905 may also be connected to an aspiration source such as a pump or syringe."); Ex. 1018 (Brady) at 3:11-13 ("A syringe or vacuum pump is then attached to the proximal end of the catheter and a vacuum applied to attempt to suck the clot into the catheter tip and out through the catheter."); Ex. 1020 (Trerotola) at 1:32-34 ("During this procedure, the blood containing clot fragments are withdrawn from the thrombus area with a 50 mL syringe.").

140. Schaffer also discloses that its valve prevents leakage across "a range of instruments," such as "a catheter, guidewire, needle, or fiber." Ex. 1005 (Schaffer) at [0056]. Aspiration catheters were commonly used with hemostasis valves prior to September 2017 to apply vacuum pressure through the catheter, often using syringes. For example, Garrison discloses an aspiration catheter 2030 having a proximal hub 2065 that may include a "separate hemostasis valve … attached to proximal hub, to allow introduction of devices such as a microcatheter, guide wire, or thrombectomy device while preventing or minimizing blood loss during the

procedure. Alternately, the hemostasis valve may be integral to the catheter proximal adaptor":

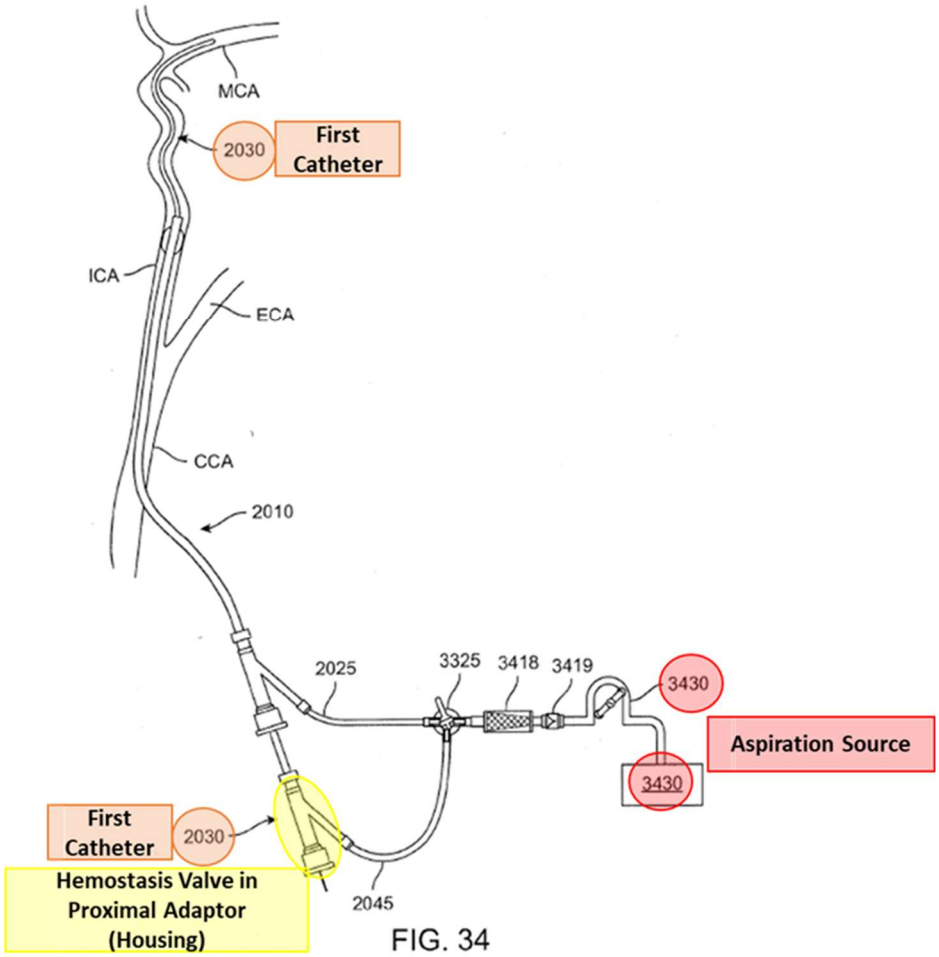

Ex. 1011 (Garrison) at [0098], Fig. 34; *see also id.* at [0130]-[0142]. Garrison's system includes an aspiration source, such as a syringe or a pump, that creates a vacuum to aspirate material from the patient's vasculature through the flow path. *Id.* at [0136]-[0137]; *see also* Ex. 1018 (Brady) at abstract ("A system for removing occlusive clot from a blood vessel comprises a catheter and an apparatus for generating a pulsatile vacuum force to pulse the pressure gradient at a distal end of the catheter."); Ex. 1020 (Trerotola) at abstract ("A device and methods for filtering

blood clot particles from blood from [sic] patient undergoing treatment for a thrombotic condition with a catheter are described.”).

141. I do not see anything about the design of Schaffer’s valve that would lead a person of ordinary skill in the art to believe the valve would open when exposed to negative pressure or be otherwise unsuitable for use with a device that creates vacuum pressure, such as an aspiration catheter. Schaffer’s U-shaped actuating members are pulled perpendicular to the lumen of the catheter with the springs. The suction force from the aspiration catheter would not be applied in the correct direction to move the U-shaped actuating members outward but may, in fact, help to pull the valve inward and even increase the strength of the seal. Thus, Schaffer’s valve is configured to remain constricted and sealed when vacuum pressure is applied to a volume outside the lumen and adjacent to either a first end or a second end of the tubular member.

142. In addition, the only description I see in the ’921 patent regarding the valve’s ability to seal in the presence of vacuum pressure is the following statement: “due to the narrowing shape of the elongate member 132 when the constricting mechanism 141 is in the first configuration, a vacuum applied to the portions of the delivery device 100 distal to the axis 152 draws the elongate member 132 towards the first configuration and can, in some embodiments, increase the strength, robustness, and/or strength of the seal of the valve 104.” Ex. 1001 (’921 patent) at

10:50-60. Notably, Schaffer's elongate member (i.e., the seal module 100) also has a "narrowing shape" when the actuator buttons are in the first, undepressed configuration:

'921 Patent	Schaffer
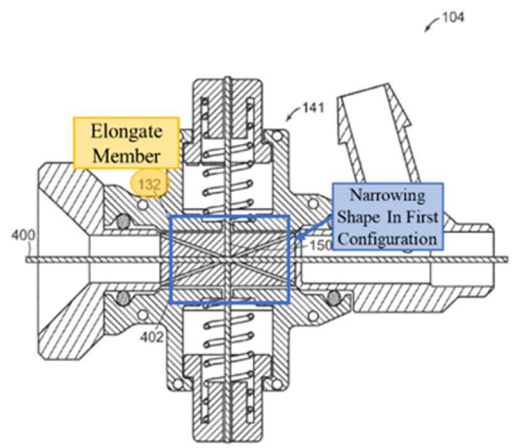 FIG. 4	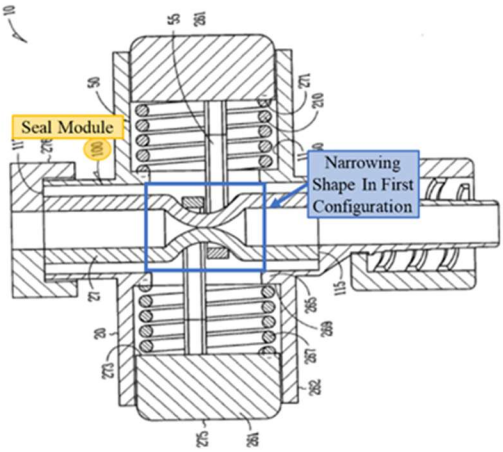

Id. at Fig. 4 (left); Ex. 1005 (Schaffer) at [0077], Fig. 32 (right). Thus Schaffer's valve has the same structure, features, and function as those that the '921 patent describes as enabling the valve to seal in the presence of vacuum pressure. A person of ordinary skill in the art would have expected the narrowing shape of Schaffer's lumen to further seal in the face of negative pressure, just as the '921 patent describes.

143. In addition, for similar reasons as I explained above and for Claim 5, a person of ordinary skill in the art would also have reasonably expected that Hartley's string or Eller's wire member would maintain Schaffer's tubular member

in a constricted and sealed state when Schaffer's actuator buttons are in the first, undepressed position, even when a vacuum pressure is applied to a volume outside of the valve's lumen. Ex. 1005 (Schaffer) at [0008], [0077]; Ex. 1006 (Hartley) at [0003], [0006]; Ex. 1007 (Eller) at 27:44-50, 36:46-37:3. Again, Schaffer's buttons/springs pull the strings/wire members perpendicular to the forces caused by any vacuum pressure and may, in fact, help to pull the valve inward and even increase the strength of the seal.

144. To the extent Schaffer's valve did not maintain its seal under vacuum pressure (either with the U-shaped members, or the string/wire member), a person of ordinary skill in the art would have found it obvious to adjust Schaffer's valve to ensure that it could maintain a seal in the presence of vacuum pressure. For example, the person of ordinary skill in the art could have made one or more simple adjustments to Schaffer's valve to maintain the seal, including adjusting the spring strength to apply additional force to seal the valve, adjusting the resilience and compressibility of the seal module that forms the valve's lumen, and/or adjusting the shape, flexibility, mechanical properties, and/or dimensions of the U-shaped actuating members to more closely conform to the shape of the seal module and any tool(s) inserted through the valve. A person of ordinary skill in the art would have been motivated to do so because the purpose of Schaffer's hemostasis valve is to prevent leakage when other devices, or no devices, are inserted, and whether the

valve is exposed to positive pressure or vacuum pressure. Adjusting the spring strength would have been a simple modification that could have been accomplished by, for example, selecting a spring made of different materials or with tighter windings. The selection of springs would have been something commonly done by persons of ordinary skill in the art and well within their skill level. As I explained previously, a person of ordinary skill in the art would have reasonably expected success in selecting an appropriate material for the seal module in view of the range of suitable lumen materials disclosed in the prior art. *Supra* ¶94. As I also explained previously, a person of ordinary skill in the art would have reasonably expected success in adjusting the size, shape, mechanical properties, and/or dimensions of Schaffer's U-shaped actuating members to modify their flexibility and improve the seal around the cylindrical seal module. *Supra* ¶81.

G. <u>Claim 7</u>

145. Claim 7 recites: "The valve of claim 1 wherein the lumen extends a long [sic] a first longitudinal axis, wherein the actuator is movable between the first and second positions along a second longitudinal axis, and wherein the first longitudinal axis is orthogonal to the second longitudinal axis." Schaffer anticipates claim 7 or renders claim 7 obvious alone or in view of Hartley ***or*** Eller.

146. Schaffer's actuator buttons are movable between a first (undepressed) position shown in Figure 32 below and second (depressed) position shown in Figure

34 below along a longitudinal axis that is orthogonal to the longitudinal axis of the elongate member (seal module 100):

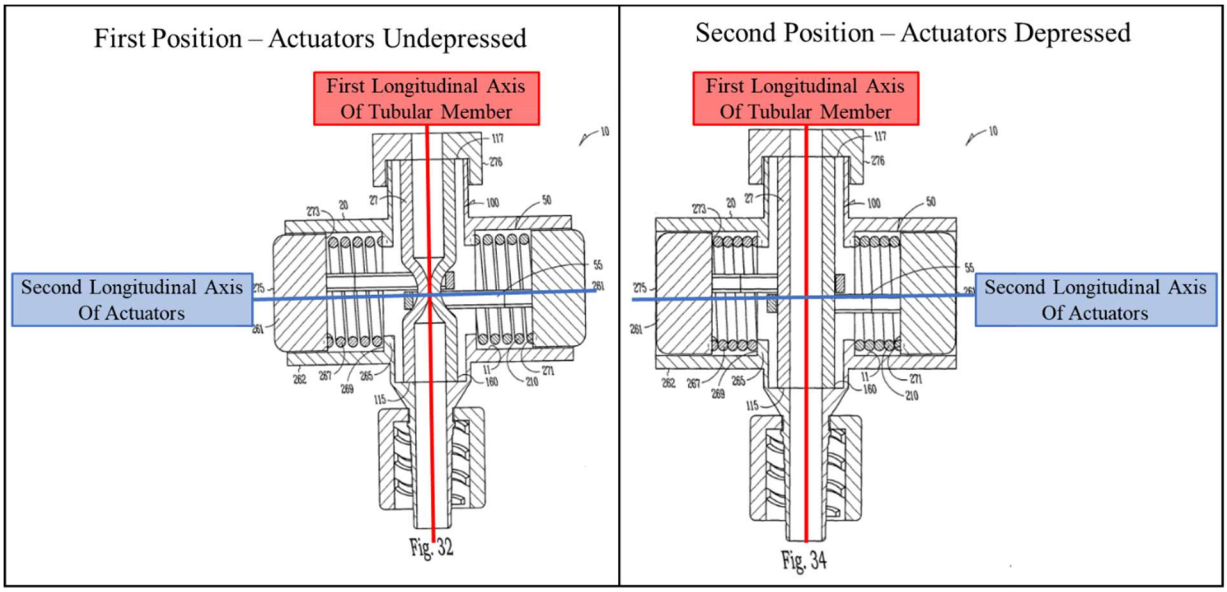

Ex. 1005 (Schaffer) at [0077], Figs. 31-34.

H. <u>Claim 9</u>

147. Claim 9 recites: "The valve of claim 1 wherein, in the first position, the actuator pulls the filament to circumferentially constrict the elongate member such that the lumen is constricted and sealed." Schaffer anticipates claim 9 or renders claim 9 obvious, alone or in view of Hartley ***or*** Eller.

148. As I explained previously for Claim 1, when Schaffer's actuator buttons are in the first, undepressed position, the springs coupled to Schaffer's actuator buttons impart forces on the actuator buttons causing the buttons to pull the U-shaped actuating members in opposite directions to circumferentially constrict the seal module 100:

Constricted State

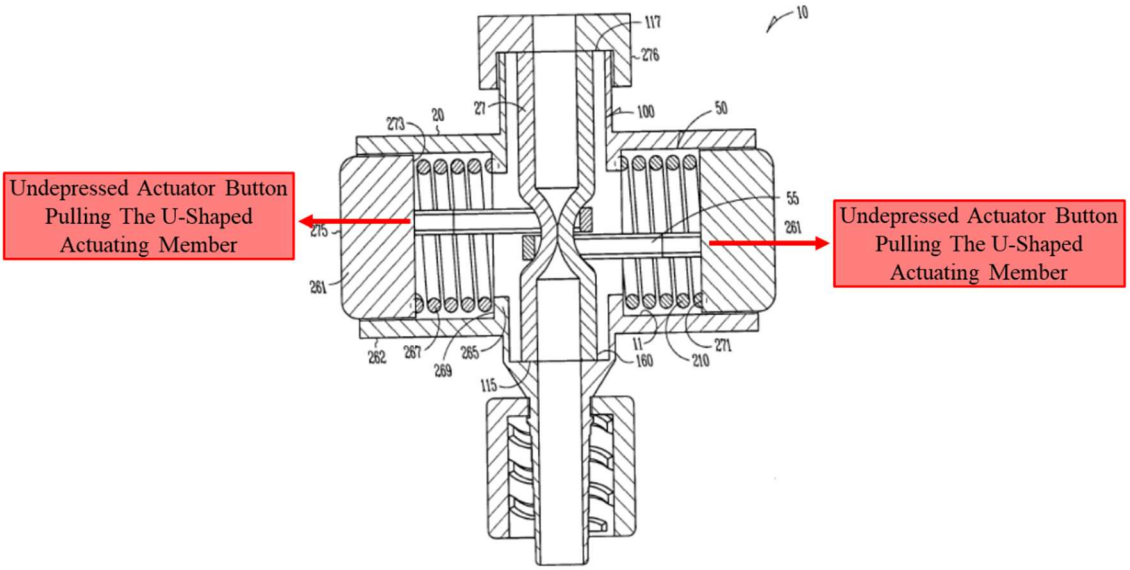

Fig. 32

Ex. 1005 (Schaffer) at [0076]-[0077]. Alternatively, when Schaffer's U-shaped actuating members are replaced with Hartley's string or Eller's wire member, Schaffer's actuator buttons would pull the string/wire member, rather than the U-shaped actuating members, to circumferentially constrict the seal module 100.

I. <u>Claim 10</u>

149. Claim 10 recites: "The valve of claim 1 wherein the actuator is a first actuator, wherein the filament is a first filament, wherein the biasing member is a first biasing member, and wherein the active tensioning mechanism further comprises: a second actuator coupled to the elongate member via a second filament extending at least partially around the elongate member, wherein the second actuator is moveable between (a) a first position wherein the lumen is constricted and sealed and (b) a second position wherein the lumen is at least partially open;

and a second biasing member configured to bias the second actuator to the first position." Schaffer anticipates claim 10 or renders claim 10 obvious, alone or combined with Hartley ***or*** Eller.

1. <u>Schaffer</u>

150. As I explained in Claim 1, Schaffer discloses a first actuator (i.e., first button), a first filament, and a first biasing member (i.e., spring). Schaffer's valve also includes a second actuator (i.e., second button), second filament, and second biasing member positioned on the opposite side of the elongate member:

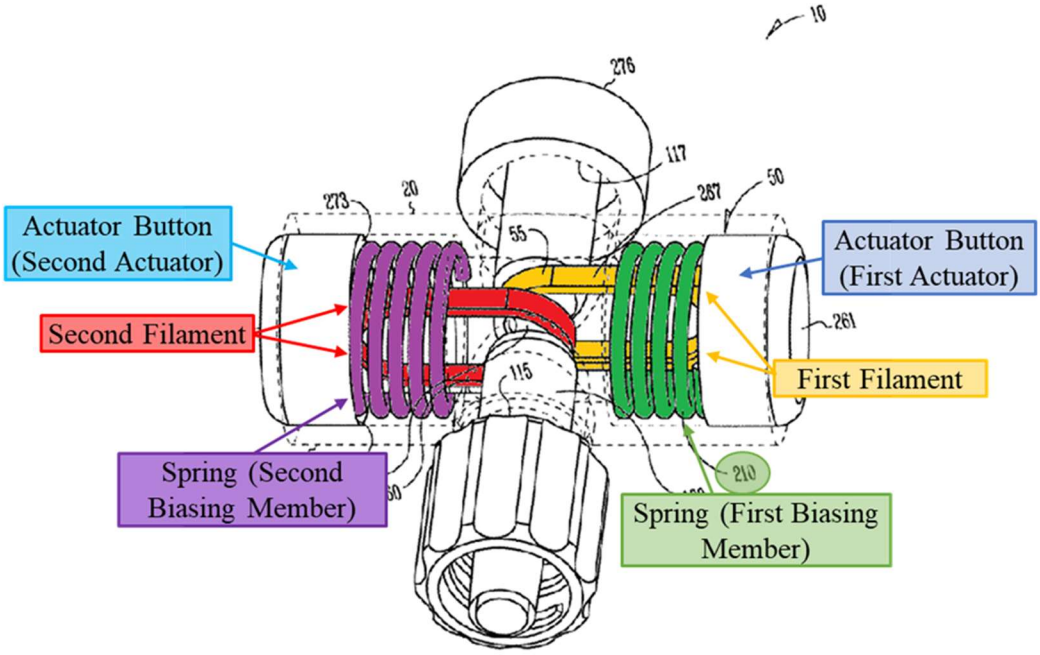

Fig. 31

Ex. 1005 (Schaffer) at [0075]-[0077], Fig. 31. Schaffer's second filament extends at least partially around the elongate member. *Id.* at [0076], Fig. 31.

151. Schaffer's second actuator is coupled to the elongate member via the second filament in the same way that the first actuator is coupled to the elongate

member via the first filament. *Supra* ¶¶74, 80, 83. Similarly, Schaffer's second actuator is "moveable between (a) a first position wherein the lumen is constricted and sealed and (b) a second position wherein the lumen is at least partially open" in the same way as the first actuator. *Supra* ¶75. Schaffer's second biasing member (i.e., second spring) biases the second actuator toward the first position in the same way as the first biasing member described in claim 1. *Supra* ¶¶107-109.

2. <u>Hartley</u>

152. Schaffer combined with Hartley renders this claim obvious in two ways. ***First***, Hartley discloses a string 14 mounted to the rotary actuator. Ex. 1006 (Hartley) at [0031]. I discussed the string in Claim 1. *Supra* ¶¶82-84. A person of ordinary skill in the art would have understood that strings typically consist of several threads twisted together. For example, the definition of "string" provided on Google Dictionary is "material consisting of threads of cotton, hemp, or other material twisted together to form a thin length. Ex. 1014 (definition of string from Google Dictionary); *see also* Ex. 1015 (Cambridge Dictionary defining "string" as "(a piece of) strong, thin rope made by twisting very thin threads together, used for fastening and tying things"); *see also* Ex. 1007 (Eller) at 15:61-16:6 (wire member "can have any suitable structure and comprise any suitable number of strands and/or fibers that are twisted"). Consequently, a person of ordinary skill in the art would have recognized that Hartley's string 14 encompasses strings having two or more

threads, lines, or cords twisted together and therefore includes at least a first and second filament.

153. As explained above, if a person of ordinary skill in the art substituted Hartley's string for Schaffer's U-shaped actuating members, the two or more threads, lines or cords making up the string would begin at the first actuator button, wrap around the elongate member at least once, and end at the second actuator button:

Demonstrative Illustration
Schaffer + Hartley's String

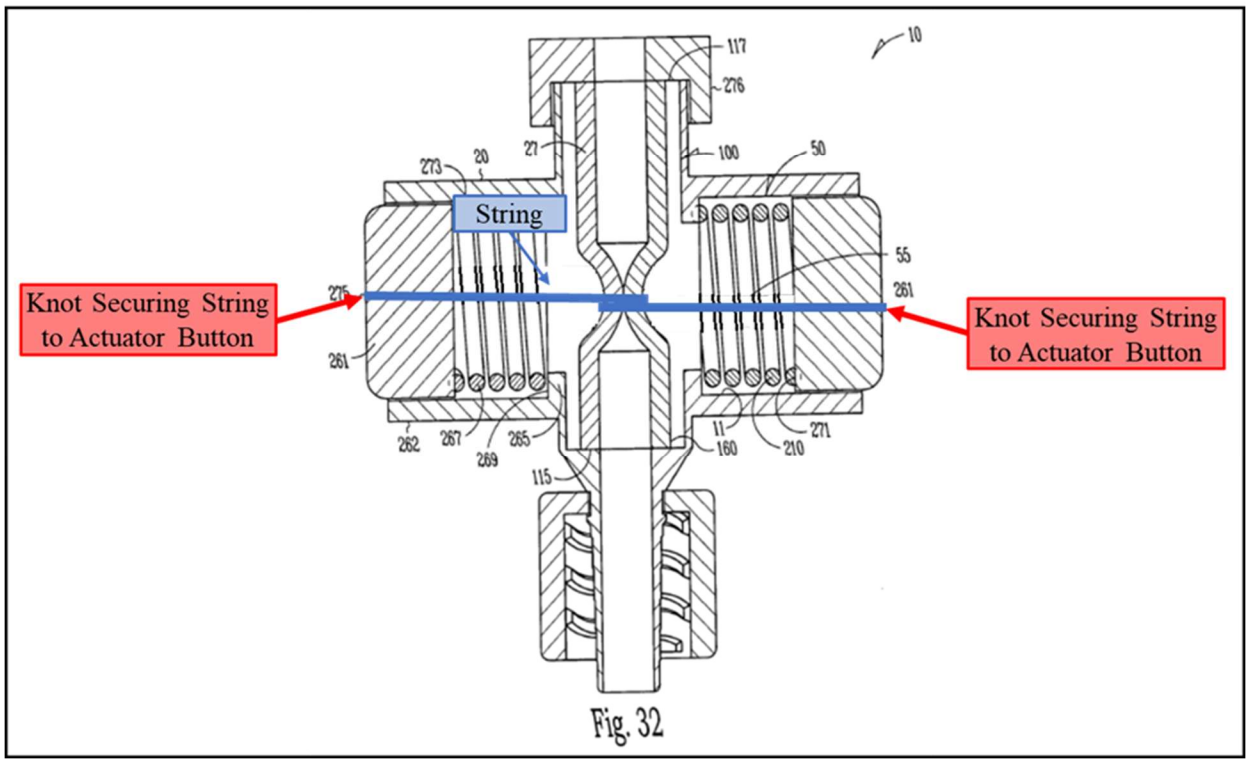

Supra ¶90. The string, comprised of at least first and second filaments, would tighten to collapse and seal the elongate member in a first position and relax to

unseal the elongate member in a second position. As I explained in Claim 1, a person of ordinary skill in the art would have been motivated to substitute Hartley's string for Schaffer's U-shaped actuating members, and reasonably expected success in doing so. *Supra* ¶¶85-94.

154. ***Second***, rather than replace Schaffer's U-shaped actuating members with a single string extending from the first actuator to the second actuator, a person of ordinary skill in the art would have also found it obvious to replace each U-shaped actuating member with a string. Hartley discloses that a string can effectively constrict a tube extending through a hemostasis valve and can perform the same constricting function as the U-shaped actuating members. Ex. 1006 (Hartley) at *abstract*. A person of ordinary skill in the art would have been motivated to substitute Hartley's string for the actuating members, and reasonably expected success in doing so, for several reasons. First, strings would have been readily available to engineers. For example, an engineer in 2017 could have ordered a variety of different strings from almost any hardware store, not to mention online retailers. Further, strings are simple structures that behave predictably. A person of ordinary skill in the art using a string to constrict a tube would have been able to predict how the string would behave. Further, a person of ordinary skill in the art would have had the option of purchasing strings of varying dimensions, strength and stiffness. Additionally, not only could a person of ordinary skill in the art

purchase a large variety of strings off the shelf, but string is typically relatively inexpensive. This would have provided an added benefit for a person of ordinary skill in the art replacing Schaffer's U-shaped actuating members with Hartley's string.

155. Also, in September 2017, a finite number of predictable materials existed for use as actuating members to constrict a tube in a valve. Schaffer discloses two such options, plastic and aluminum. Ex. 1005 (Schaffer) at [0081]. Hartley discloses additional options, a string, suture, or band. Ex. 1006 (Hartley) at [0017]. Likewise, Eller discloses an option, a wire member. Ex. 1007 (Eller) at *abstract*. A person of ordinary skill in the art would have found it obvious to try any of these materials in Schaffer's valve because the materials are commonly used in medical devices, easy to use, predictable, and well known to a person of ordinary skill in the art. In fact, Eller confirms that a person of ordinary skill in the art would have possessed the necessary skill and knowledge to use different materials and configurations to constrict a tube in a valve. Ex. 1007 at 15:61-16:6. Eller explains that a "wire member" can have "any suitable structure and comprise any suitable number of strands and/or fibers that are twisted, or otherwise interconnected to one another." *Id.* at 15:59-65. Eller presumes the person of ordinary skill in the art would possess the knowledge to select the appropriate structure. Similarly, Eller explains that "[s]killed artisans will be able to select a suitable number of wire

members to include in a selective fluid barrier valve device according to a particular embodiment based on various considerations, including the material(s) that forms the sleeve of an embodiment." *Id.* at 16:11-15. Eller's description of the skilled artisan is consistent with my experience. Further, the replacement of Schaffer's actuating members with string would have merely entailed the substitution of one known element (Hartley's string) for another (plastic or aluminum) to yield the predictable results of sealing Schaffer's valve. For all of these reasons, Claim 10 is rendered obvious based on Schaffer combined with Hartley.

3. <u>Eller</u>

156. Eller discloses embodiments having a first wire member, a second wire member, and a third wire member. Ex. 1007 (Eller) at 5:1-6. As discussed above, Eller further explains that its valve "can include any suitable number of wire members" and that "[s]killed artisans will be able to select a suitable number of wire members to include in a selective fluid barrier valve device according to a particular embodiment based on various considerations, including the material(s) that forms the sleeve of an embodiment." *Id.* at 16:7-15. Eller discloses that "[e]xample number of wire members considered suitable to include in a selective fluid barrier valve device include . . . two" wire members. *Id.* at 16:15-19.

157. As I explained above with respect to Hartley, a person of ordinary skill in the art would have found it obvious to use a wire comprised of two filaments

(i.e., strands or fibers) that extend from the first actuator button, loop around the elongate member, and terminate at the second actuator button. Eller expressly explains that each wire member can include two or more strands or fibers. Ex. 1007 (Hartley) at 15:61-16:6. In this configuration, the Hartley wire member would include at least two filaments.

158. Alternatively, a person of ordinary skill in the art would have found it obvious to replace each of Schaffer's U-shaped actuating members with a wire member. A person of ordinary skill in the art would have been motivated to use Eller's wire members in either configuration, and reasonably expected success in doing so, based on the teachings in Eller that broadly describe the available configurations for the wires, because Eller confirms the wires perform the same constricting function as Schaffer's actuating members, and because the wire members are readily available to engineers, predictable, and inexpensive options to incorporate into the valve. Ex. 1007 (Hartley) at 15:61-16:19.

159. Also, as I discussed above when discussing Hartley, a person of ordinary skill in the art would have had a finite number of options for the number of filaments used to constrict the lumen of an elongate member in a valve in September 2017. *Supra* ¶155. Further, the replacement of Schaffer's actuating members with wire members would merely entail substituting one known element (Eller's wire members) for another (plastic or aluminum actuating members) to

yield the predictable results of sealing Schaffer's valve. For all of these reasons, Claim 10 is rendered obvious based on Schaffer combined with Eller.

J. <u>Claim 15</u>

160. Claim 15 recites:

> 15. A valve, comprising:
> an elongate member defining a lumen;
> a filament coupled to the elongate member;
> an actuator coupled to the filament, wherein the actuator is moveable between (a) a first position wherein the lumen is constricted and sealed and (b) a second position wherein the lumen is at least partially open; and
> a biasing member configured to bias the actuator to the first position.

As shown, Claim 15 repeats the limitations found in Claim 1 with two exceptions. First, Claim 15 requires the "filament" to be "coupled to the elongate member" and "coupled to" the actuator, while Claim 1 requires the actuator to be "coupled to the elongate member via a filament." Second, Claim 15 does not require an "active tensioning mechanism" like Claim 1. Schaffer anticipates Claim 15 or renders it obvious, alone or in view of Hartley ***or*** Eller.

161. As explained in my discussion of Claim 1, Schaffer's U-shaped actuating members (filaments) are coupled to the elongate member and the actuators (buttons). *Supra* ¶¶74, 78, 80. This is shown, for example, in Figures 31-34:

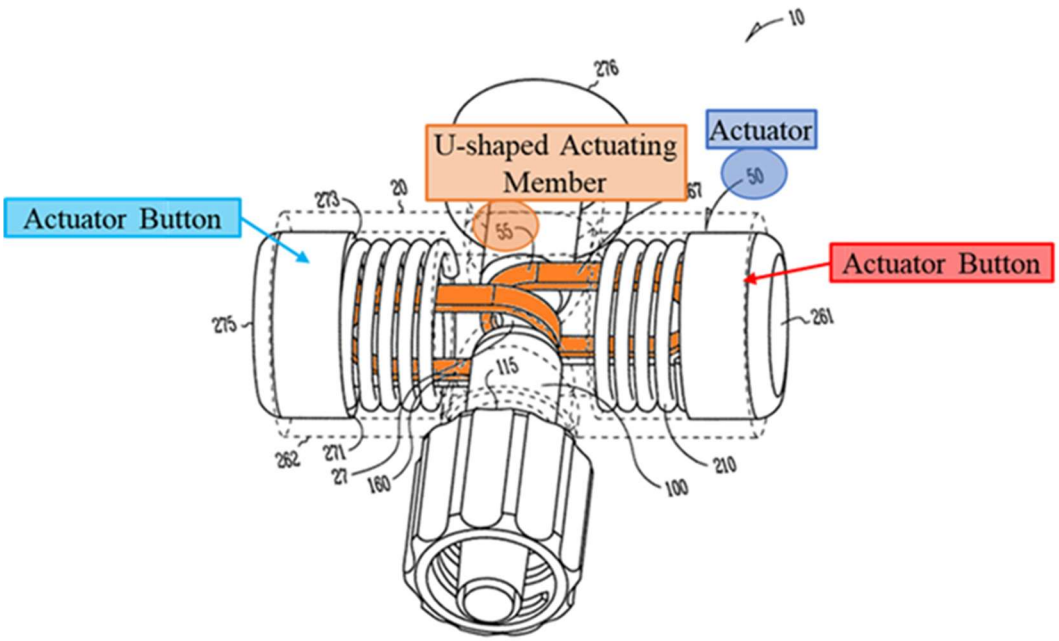

Fig. 31

Ex. 1005 (Schaffer) at Fig. 31.

162. Schaffer discloses the remaining limitations of claim 15 or renders them obvious, both alone or in view of Hartley ***or*** Eller, for the reasons provided in Claim 1. *Supra* ¶¶65-109.

K. <u>Claim 16</u>

163. Claim 16 recites: "The valve of claim 15 wherein the filament extends at least partially around the elongate member." Claim 1 includes this same limitation. Therefore, Schaffer anticipates this claim or renders it obvious, both alone and in view of Hartley ***or*** Eller, for the reasons provided for Claim 1. *Supra* ¶¶80, 83, 97.

L. <u>Claim 17</u>

164. Claim 17 recites: "The valve of claim 16 wherein, in the first position, the actuator pulls the filament to circumferentially constrict the elongate member such that the lumen is constricted and sealed." Claim 9 includes this same limitation. Therefore, Schaffer anticipates this claim or renders it obvious, both alone and in view of Hartley ***or*** Eller, for the reasons provided for Claim 9. *Supra* ¶¶147-148.

M. <u>Claim 18</u>

165. Claim 18 recites: "The valve of claim 15 wherein the elongate member is pliable." Claim 2 included this same limitation. Therefore, Schaffer anticipates this claim or renders it obvious, both alone and in view of Hartley ***or*** Eller, for the reasons provided for Claim 2. *Supra* ¶¶110-111.

N. <u>Claim 20</u>

166. Claim 20 recites: "The valve of claim 15 wherein the actuator is a button that is undepressed in the first position and depressed in the second position, and wherein the button is movable between the first and second positions along a first longitudinal axis, and wherein the first longitudinal axis is orthogonal to the second longitudinal axis." Claim 20 combines the limitations from Claim 4 and Claim 7. Therefore, Schaffer anticipates this claim or renders it obvious, both alone

and in view of Hartley ***or*** Eller, for the reasons provided for Claims 4 and 7. *Supra* ¶¶121-122, 145-146.

O. <u>Claim 21</u>

167. Claim 21 recites:

> 21. A valve, comprising:
> an elongate member defining a lumen;
> a filament coupled to the elongate member; and
> an actuator coupled to the elongate member, wherein the actuator is moveable between (a) a first position in which the actuator pulls the filament to collapse the elongate member such that the lumen is constricted and sealed and (b) a second position wherein the lumen is at least partially open; and
> a biasing member configured to bias the actuator to the first position.

Claim 21 is similar to Claim 15, which two insignificant differences. First, Claim 21 requires an "actuator coupled to the elongate member," while Claim 15 requires "an actuator coupled to the filament." However, Claim 1 requires an "actuator coupled to the elongate member," so I have already addressed this limitation. Second, Claim 21 specifies that the "actuator pulls the filament to collapse the elongate member." Claim 9 requires this same limitation, so I have already addressed this limitation as well.

168. Schaffer's actuators are coupled to the elongate member via the filament for the reasons I provided in Claim 1. *Supra* ¶¶74, 80, 83. Similarly, Schaffer's actuator pulls the filament to collapse the elongate member, regardless of whether the filament comprises Schaffer's actuating members, Hartley's string,

or Eller's wire member, for the reasons I provided in Claim 9. *Supra* ¶¶147-148. Schaffer therefore anticipates claim 21 or renders it obvious, alone or in view of Hartley ***or*** Eller.

P. <u>Claim 22</u>

169. Claim 22 recites: "The valve of claim 21 wherein the elongate member is pliable, and wherein the filament extends at least partially around the elongate member." Claim 22 combines limitations found in Claim 1 and Claim 2. Therefore, Schaffer anticipates this claim or renders it obvious, both alone and in view of Hartley ***or*** Eller, for the reasons provided for Claims 1 and 2. *Supra* ¶¶80, 83, 97, 110-111.

Q. <u>Claim 23</u>

170. Claim 23 recites: "The valve of claim 21 wherein the elongate member is pliable, and wherein the filament is looped around the elongate member." Claim 23 combines the limitations found in Claim 2 and Claim 3. Therefore, Schaffer anticipates this claim or renders it obvious, both alone and in view of Hartley ***or*** Eller, for the reasons provided for Claims 2 and 3. *Supra* ¶¶110-120.

R. <u>Claim 24</u>

171. Claim 24 recites: "The valve of claim 21 wherein the actuator does not substantially pull the filament in the second position such that the elongate member

can expand." Schaffer discloses this limitation and therefore anticipates claim 24 or renders it obvious, alone or in view of Hartley ***or*** Eller.

172. Schaffer discloses that in a second position, shown in Figure 34 below, the actuator buttons are pressed inwardly, compressing the springs and allowing the actuator members to "disengage opposing outer walls 27 of the seal module 100 allowing the portion 108 of the containment structure 160 to retract to an uncollapsed configuration where gasses and fluids can pass therethrough":

Second Position – Actuator Buttons Depressed

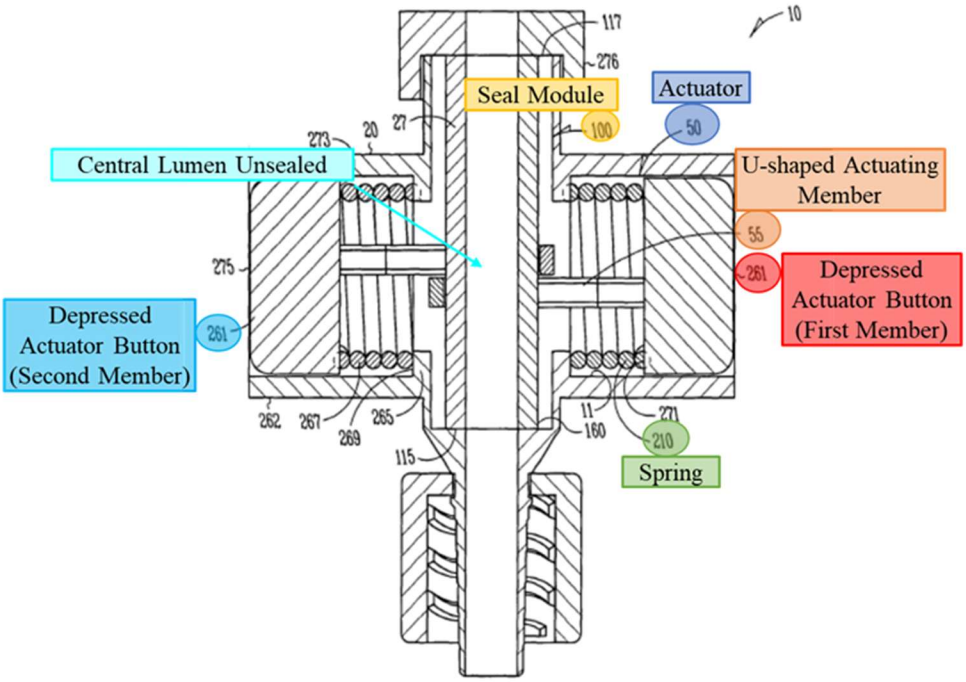

Fig. 34

Ex. 1005 (Schaffer) at [0077], Fig. 34. Accordingly, Schaffer's actuators do not substantially pull the filament when in the second position, allowing the elongate member to expand to an uncollapsed configuration.

173. If Schaffer's actuating members were replaced with Hartley's string or Eller's wire members, pushing the buttons would similarly cause the string/wire member to loosen around the elongate member to permit the elongate member to assume its uncollapsed configuration. *Supra* ¶¶90-94, 103-106.

VII. GROUND 5-7: CLAIMS 1-3, 5-6, 9, 15-18, AND 21-24 OBVIOUS OVER HARTLEY IN COMBINATION WITH ELLER

174. During prosecution of the '921 patent, the examiner found that Hartley discloses every limitation of several claims except "a biasing member configured to bias the actuator to the first position." Ex. 1002 ('921 patent prosecution history) at 25. However, the examiner overlooked that such biasing members were well known in the prior art and would have been obvious to combine with Hartley in September 2017. Moreover, the Examiner did not have Schaffer, which also disclosed a biasing member.

175. As discussed in more detail below, Eller discloses a biasing member for a hemostasis valve in the form of a torsion spring placed between the valve's housing and rotating actuator such that "when no outside forces are applied to the … valve device, the spring positions the actuator" in the closed position. Ex. 1007 (Eller) at 19:22-30. A person of ordinary skill in the art would have recognized that Eller's torsion spring would be well-suited for use with Hartley's rotational actuator, and a person of ordinary skill in the art would have found it obvious to combine Eller's biasing member (e.g., torsion spring) with Hartley's valve.

Therefore, it is my opinion that Hartley combined with Eller renders Claims 1-3, 5-6, 9, 15-18, and 21-24 of the '921 patent obvious.

A. Claim 1

176. Based on my review of the prior art, it is my opinion that Hartley combined with Eller renders Claim 1 obvious.

1. Preamble

177. The preamble of Claim 1 recites: "A valve." If this preamble is limiting, Hartley and Eller disclose this limitation for the reasons provided in Grounds 1-4 (Claim 1). *Supra* ¶¶ 68-69.

2. Elongate Member

178. Claim 1 next recites "an elongate member defining a lumen." Hartley discloses this limitation.

179. Hartley discloses an "access valve which can be controlled to vary the size of the aperture through the valve and be flexible so that a seal may be formed against an instrument or other object inserted through the access valve." Ex. 1006 (Hartley) at [0004]. As shown in Figure 1 below, Hartley's valve includes a "cylindrical housing 6 into which is received a cylindrical elastomeric diaphragm 8 … [that] defines a cylindrical aperture 3 therethrough":

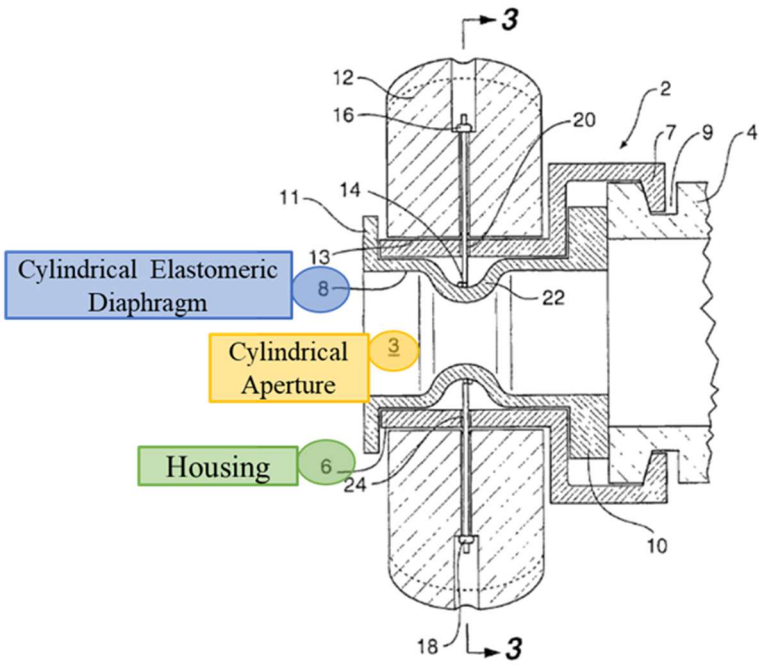

Fig 1

Id. at [0031], Fig. 1. Hartley discloses that "the cylindrical diaphragm can be completely constricted to prevent fluid flow through the valve or can be constricted to the extent that it closes around an instrument, for instance a catheter, passed through the valve." *Id.* at [0006]. Thus, Hartley's cylindrical diaphragm is "an elongate member defining a lumen."

3. <u>Tensioning Mechanism</u>

180. Claim 1 next recites "an active tensioning mechanism including an actuator coupled to the elongate member via a filament extending at least partially around the elongate member, wherein the actuator is movable between (a) a first position wherein the lumen is constricted and sealed and (b) a second position wherein the lumen is at least partially open." Hartley discloses these limitations.

a. <u>Actuator</u>

181. Hartley's valve includes a cylindrical housing that holds a "cylindrical elastomeric diaphragm," and a rotatory actuator mounted onto the housing:

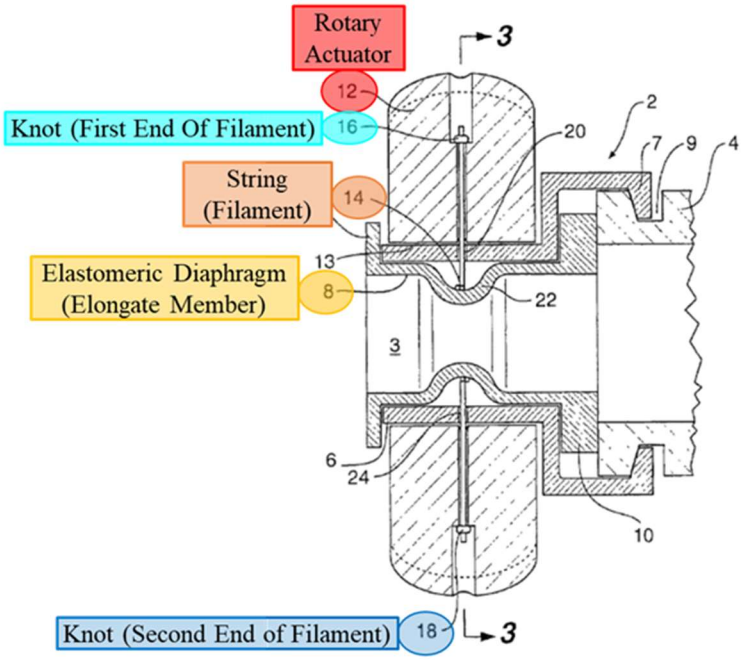

Fig 1

Ex. 1006 (Hartley) at [0031], Fig. 1. Hartley's rotary actuator is coupled to the cylindrical diaphragm (elongate member) via the string 14 (i.e., filament).

182. Hartley's actuator is also "moveable between (a) a first position wherein the lumen is constricted and sealed and (b) a second position wherein the lumen is at least partially open." Hartley discloses that "[r]otation of the rotary actuator 12 with respect to the cylindrical housing 6 will cause the string 14 to be pulled in both directions at once and hence the cylindrical diaphragm 8 to be constricted":

Constricted State

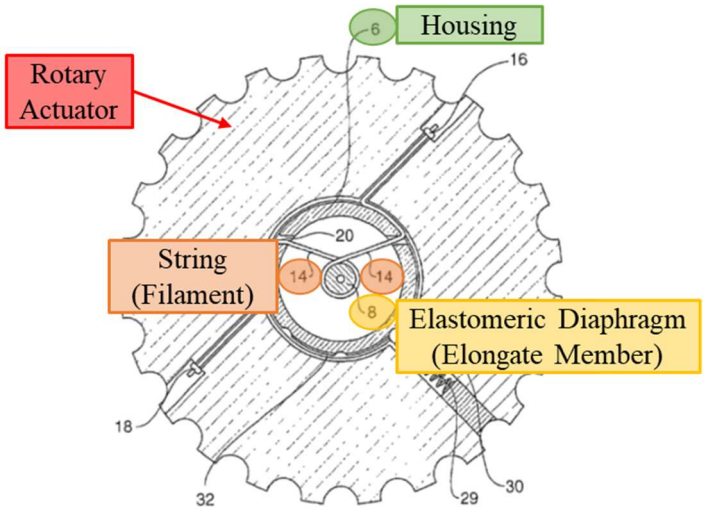

Fig 4

Id. at [0031], [0034], Fig. 4. Hartley further discloses that the "access or construction valve arrangement … will close over a range of diameters of devices passed through the valve or can close completely down to be self sealing." *Id.* at [0037]. Hartley further discloses that "[r]otation of the rotary actuator back to the central position where the detent ball 28 is received in depression 34 will cause the sutures to loosen again so that the resilient cylindrical diaphragm will retain its original shape as shown in FIGS. 1 and 3":

Relaxed State

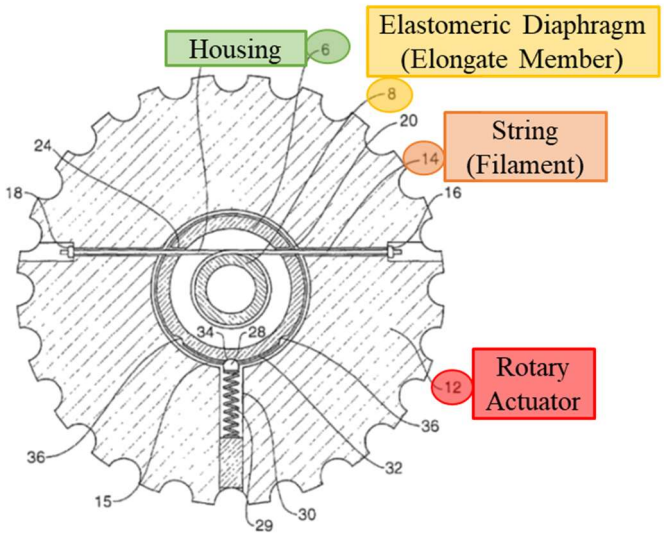

Fig 3

Id. at [0034], Fig. 3.

b. <u>Filament</u>

183. Hartley's valve includes a "flexible member," referred to as a "string" in the Detailed Description section, that is "mounted into the rotary actuator" as illustrated in Figure 1 below:

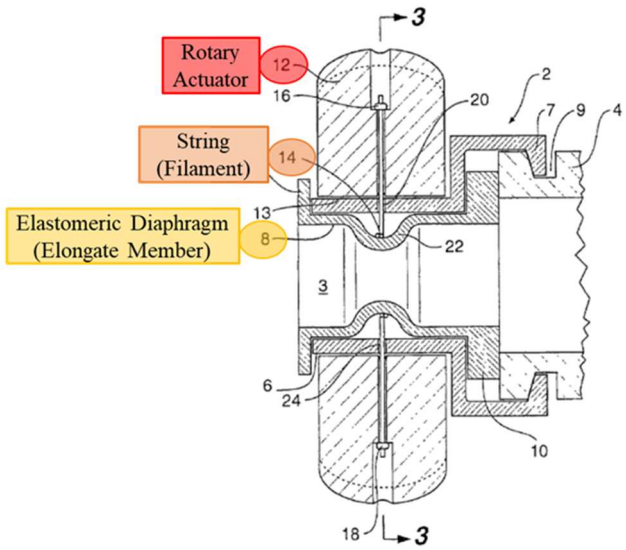

Fig 1

Id. at [0005], [0031], Fig. 1. Hartley also describes that the flexible member "may be a string, suture or band or other suitable material." *Id.* at [0017]. Hartley's flexible member is therefore a "filament" as claimed in the '921 patent. I refer to Hartley's "string" herein; however, a suture or band would also meet the claim limitations as they would be at least a thread, line, cord, rope, ribbon, flat wire, sheet, or tape.

184. Hartley discloses that the "flexible member may be mounted at both of its ends to an actuator arrangement and hence the flexible member can be simultaneously pulled in substantially opposite directions to constrict the valve." Ex. 1006 (Hartley) at [0010]. As illustrated in Figure 3 below, Hartley's string is secured to the rotary actuator at a first end via knot 16 and "then passes through an aperture 20 in the cylindrical housing 6 and then is wound preferably twice around the cylindrical diaphragm 8 … and then passes through a further aperture 24 in the cylindrical housing before being fixed by knot 18 again in the rotary actuator":

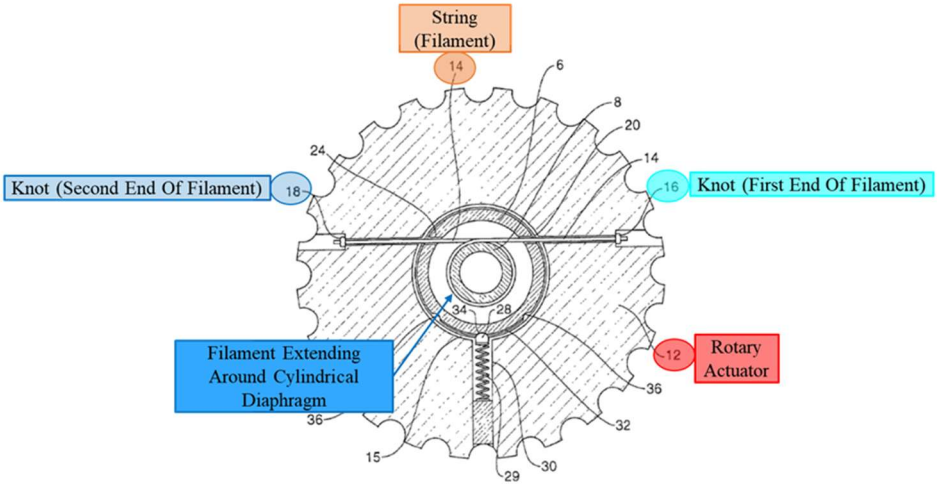

Fig 3

Id. at [0031], Fig. 3. Hartley's string is therefore "extending at least partially around the elongate member" as recited in Claim 1.

4. <u>Biasing Member</u>

185. Claim 1 next recites: "a biasing member configured to bias the actuator to the first position." Eller discloses a biasing member and Hartley in combination with Eller renders Claim 1 requiring the "biasing member" obvious.

186. Eller discloses a hemostasis valve that includes "a housing 16, an actuator 18, a sleeve 20, [and] a first wire member 22":

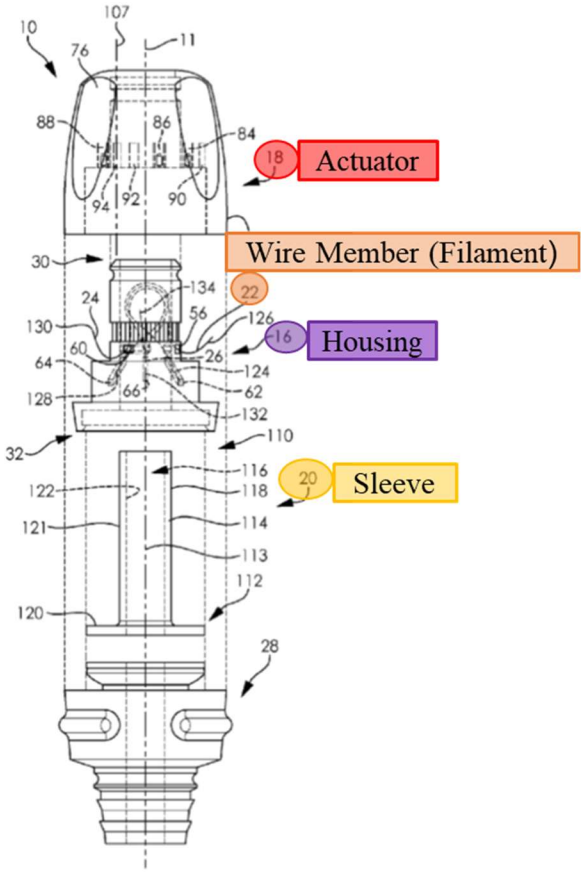

FIG. 2

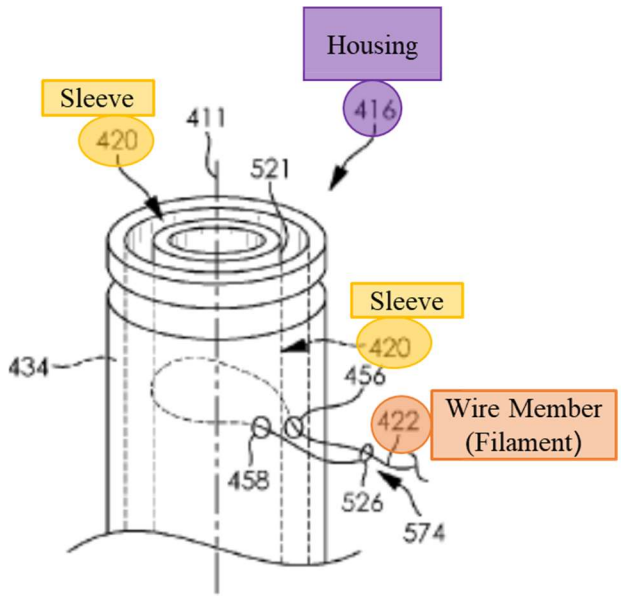

FIG. 16

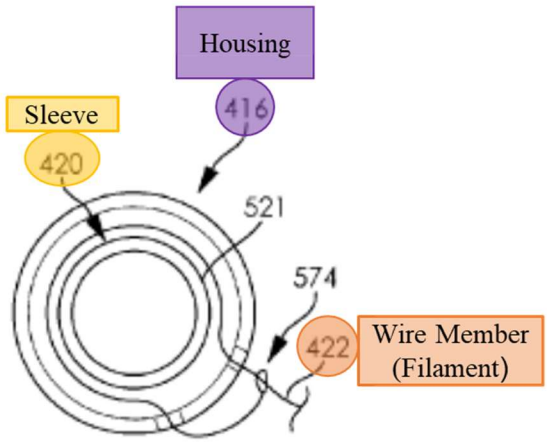

FIG. 17

Ex. 1007 (Eller) at 5:1-5, Figs. 2, 16-17. Eller explains that its valve has two configurations. "In a first configuration, the passageway 116 defined by the sleeve 20 is open such that fluid can pass through the passageway. In the second configuration, the passageway 116 defined by the sleeve 20 is closed such that fluid is prevented from passing through the passageway 116":

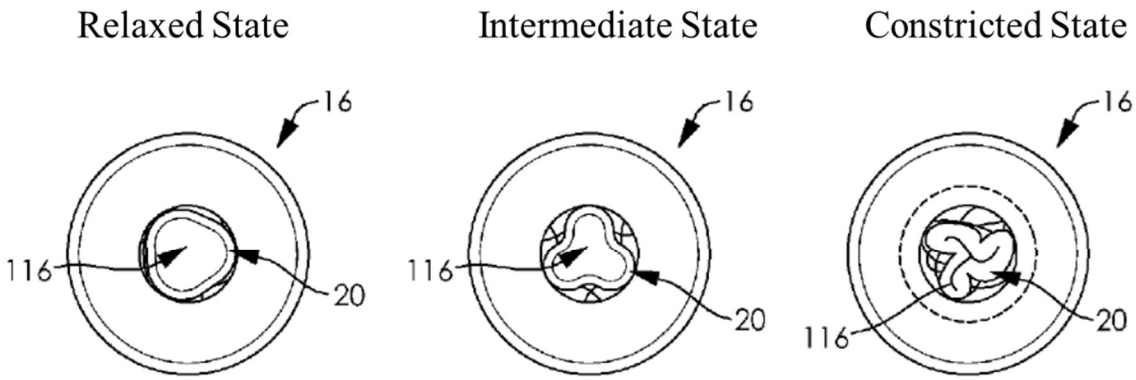

FIG. 10A FIG. 10B FIG. 10C

Id. at 12:13-18, Figs. 10A-10C. Eller further explains that its valve can include a biasing systems for biasing the valve toward the closed configuration:

> Optionally, a selective fluid barrier valve device can be **biased to the second configuration** such that the **actuator is biased to the second position**. This can be accomplished using any suitable structural configuration or component. For example, a **torsion spring** can be positioned between the housing and the actuator and can be attached to the housing and the actuator such that **when no outside forces are applied to the selective fluid barrier valve device, the spring positions the actuator in the second position**.

Id. at 19:22-30 (emphasis added). A person of ordinary skill in the art would have recognized that Eller's exemplary torsion spring biasing member would be particularly suitable for use with a rotary actuator, like that disclosed in Hartley.

187. A person of ordinary skill in the art would have been motivated to combine Eller's torsion spring biasing member with Hartley's valve for several reasons. First, the person of ordinary skill in the art would have recognized that Eller's biasing member would help ensure that Harley's valve is sealed as quickly as possible when a catheter or other tool is removed through the valve during a medical procedure. Specifically, the torsion spring would maintain Hartley's actuator/string in the constricted position as the tool is withdrawn through the valve lumen and would then quickly seal the valve completely once the tool is fully withdrawn from the valve lumen without requiring additional intervention from the operator. This would help to minimize blood loss during the procedure, which is the primary purpose for the hemostasis valve.

188. Second, the person of ordinary skill in the art would have recognized that Eller's biasing member would simplify the use of Hartley's valve and the steps required to seal the valve to prevent blood loss. For example, the torsion spring would eliminate the need for the operator to manually seal the valve before or during the procedure. The valve would be set to the closed position by default, which would minimize the possibility that operator error could allow unwanted blood leakage.

189. Third, the person of ordinary skill in the art would have recognized that adding Eller's biasing member to Hartley's valve would merely entail the combination of known elements (Hartley's valve and Eller's biasing member) according to known methods (positioning a torsion spring between the valve housing and actuator) to yield the predictable result of reducing leakage of fluid through the valve. Combining such known elements in such a predictable manner would have been well within the level of ordinary skill in September 2017.

190. A person of ordinary skill in the art would have reasonably expected success in combining Eller's torsion spring biasing member with Hartley's valve. Hartley and Eller are from the same field of endeavor and share the same objective, which is providing a hemostasis valve that can seal around a range of tools inserted through the valve during intravascular medical procedures to minimize the leakage of blood or other fluids. Ex. 1006 (Hartley) at [0004]; Ex. 1007 (Eller) at Abstract,

12:15-18, 15:21-40, 17:47-18:8. The person of ordinary skill in the art would have therefore naturally turned to Eller when seeking to improve Hartley's hemostasis valve.

191. In addition, the person of ordinary skill in the art would have recognized that Hartley's valve shares many common features with Eller's valve, such as: a housing, a rotational actuator mounted to the housing, a tubular sleeve/diaphragm extending through the actuator, and a constricting string/wire extending circumferentially around the sleeve/diaphragm. *See, e.g.,* Ex. 1006 (Hartley) at [0031], Figs. 1-3; Ex. 1007 (Eller) at 5:1-12, Figs. 1-10. These similarities would have suggested to a person of ordinary skill in the art that Eller's torsion spring biasing member could successfully be added to Hartley's similarly structured valve.

192. In addition, Eller explains that the torsion spring "can be positioned between the housing and the actuator and can be attached to the housing and the actuator such that when no outside forces are applied to the selective fluid barrier valve device, the spring positions the actuator in the second position." Ex. 1007 (Eller) at 19:26-30. A person of ordinary skill in the art would have recognized that a similar arrangement could be used for Hartley's valve. Specifically, the person of ordinary skill in the art would have reasonably expected success in attaching the torsion spring to Hartley's housing 6 and rotational actuator 12 in a position that

would cause the actuator to be biased toward the closed position when no outside force is applied to the actuator:

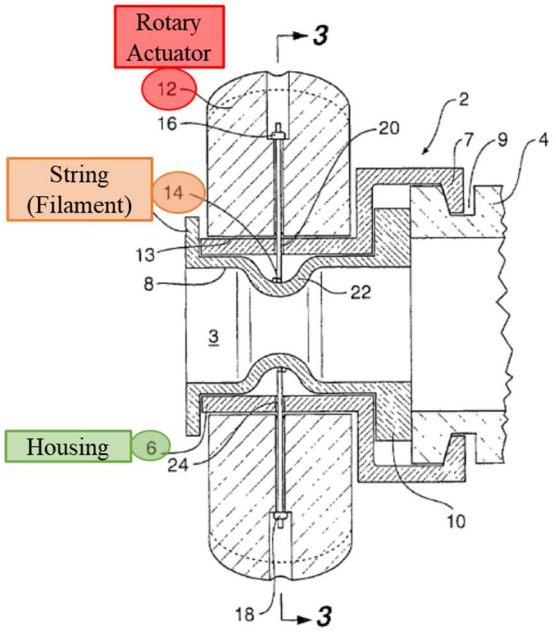

Fig 1

Ex. 1006 (Hartley) at Fig. 5. Therefore, Hartley in combination with Eller renders the "biasing member" recited in claim 1 obvious.

193. In a related IPR, I see that Patent Owner argued that a person of ordinary skill in the art would not have been motivated to combine Eller's torsion spring with Hartley's valve because "that modification would eliminate the object of Hartley's invention." *Imperative Care,* IPR2024-01157, Paper 5 at 48-49. Patent Owner argued that Hartley satisfied its objective (i.e., sealing around instruments) through a "detent arrangement." *Id.* I disagree with Patent Owner and do not believe that Hartley's "object" (i.e., sealing a valve to prevent blood loss) depends on the ball and detent feature. Hartley can seal the valve regardless of whether the

ball and detent feature is present. Hartley makes clear that the ball and detent are optional features, stating that the "rotary actuator ***may*** have a tactile indication of its action by means of a ball or other device acting into detents between the actuator and the cylindrical housing." Ex. 1006 at [0018] (emphasis added). Further, including a torsion spring within Hartley's device would not eliminate the usefulness of the ball and detent feature shown, for example, in Figures 3 and 4, to provide tactile feel of the action of the valve.. The ball and detent would continue to provide "tactile feedback" to the user as the user rotates the actuator to open the valve. This tactile feedback could be useful for determining how "open" the valve is or how quickly the user is opening the valve. For example, there may be situations where the user wants to open the valve slightly to determine if the end of the catheter is plugged with emboli (if the user opened the valve and no blood came through, the user could determine the catheter is plugged). The ball and detent feature would help the user make this determination. Similarly, the user may want to advance or retract a catheter through the valve and would want to loosen the valve slightly to do so. The detent would provide some tactile feedback to the user to know how much the valve had been loosened. For these reasons, I do not agree with Patent Owner's argument that a torsion spring is "not compatible with Hartley's detent system and would render the system inoperable."

B. Claim 2

194. Claim 2 recites: "The valve of claim 1 wherein the elongate member is pliable." Hartley discloses the additional limitations recited in Claim 2, and therefore Hartley combined with Eller renders claim 2 obvious.

195. Hartley discloses that its cylindrical diaphragm (i.e., the elongate member) "may be constructed from a elastomeric material such as silicone rubber." Ex. 1006 (Hartley) at [0016]. Elastomeric materials are pliable. Additionally, Hartley discloses that the cylindrical diaphragm can be constricted and then spring back to its original, open configuration when the constricting element is loosened. *See id.* at [0008] (Hartley disclosing that "[p]referably the cylindrical diaphragm is formed from a resilient material so that after constriction and release of the flexible member the valve reopens"). Thus, Hartley's cylindrical diaphragm is pliable.

C. Claim 3

196. Claim 3 recites: "The valve of claim 1 wherein the filament extends in a loop around the elongate member." Hartley discloses the additional limitations recited in Claim 3, and therefore, Hartley combined with Eller renders claim 3 obvious.

197. Hartley discloses that its string "is wound preferably twice around the cylindrical diaphragm" as illustrated in Figure 3 below:

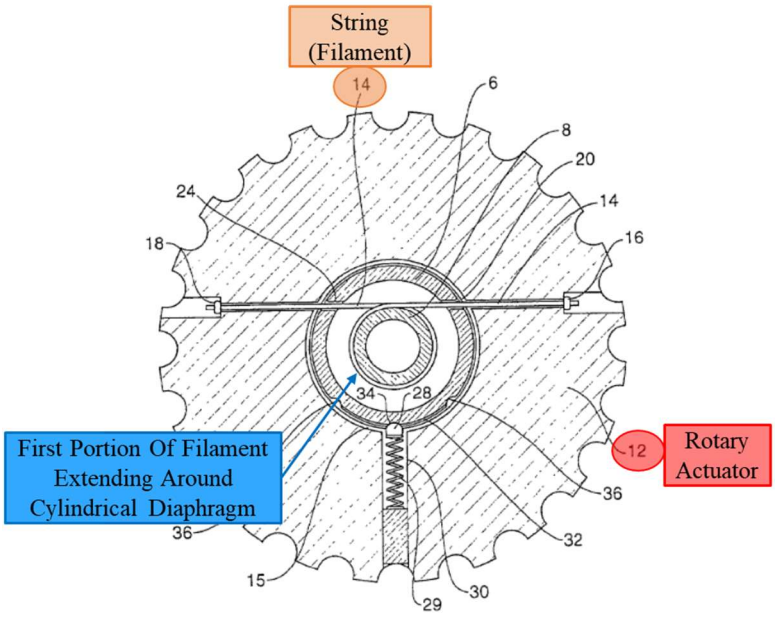

Fig 3

Ex. 1006 (Hartley) at [0031], Fig. 3. Hartley's string therefore "extends in a loop completely around the elongate member." *Id.*

D. <u>Claim 5</u>

198. Claim 5 recites: "The valve of claim 1 wherein, when the actuator is in the first position, the lumen is configured to remain constricted and sealed when a pressure differential exists between (a) a first volume outside the lumen and adjacent to a first end of the elongate member and (b) a second volume outside the lumen and adjacent to a second end of the elongate member." Hartley combined with Eller renders claim 5 obvious.

199. First, as I explained in Grounds 1-4, Claim 5 encompasses ***any*** level of pressure differential between the first and second ends of the tubular member, and a person of ordinary skill in the art would have recognized that such a pressure

differential would necessarily exist between the outside of the first end of a catheter and the second end the catheter during any procedure where the catheter is inserted into a patient's vasculature. *Supra* ¶124.

200. As I further explained in Grounds 1-4, Hartley's valve is intended for use during intravascular procedures, where such a pressure differential will necessarily exist, and Hartley discloses that its valve is intended to "permit[] [a] catheter or other instrument to be passed through the access valve and the valve to form a seal against the walls of the catheter or other instrument to prevent loss of blood or other fluid." Ex. 1006 (Hartley) at [0003]. To do so, Hartley's valve must be configured to maintain the seal in the presence of a pressure differential. *Supra* ¶¶130-132.

201. Hartley also discloses that "[d]epending on how much the flexible member [i.e., string] is pulled radially and/or tangentially the cylindrical diaphragm can be completely constricted to prevent fluid flow through the valve or can be constricted to the extent that it closes around an instrument, for instance a catheter, passed through the valve." Ex. 1006 (Hartley) at [0006]. A person of ordinary skill in the art would have recognized that when Hartley's valve is "completely constricted" or "constricted to the extent that it closes around an instrument, for instance a catheter, passed through the valve," the valve would be configured to

remain constricted and sealed, even in the presence of a pressure differential between the two ends of the valve lumen.

E. <u>Claim 6</u>

202. Claim 6 recites: "The valve of claim 1 wherein, when the actuator is in the first position, the lumen is configured to remain constricted and sealed when vacuum pressure is applied to a volume outside the lumen and adjacent to either a first end or a second end of the elongate member." Hartley combined with Eller renders claim 6 obvious.

203. As I explained previously in Grounds 1-4, a person of ordinary skill in the art in September 2017 would have recognized that some intravascular procedures include suction devices, such as aspiration catheters, which would apply vacuum pressure outside of the lumen of the hemostasis valve. A person of ordinary skill in the art would have understood that a hemostasis valve used with a suction device should be configured to maintain its seal in the presence of a vacuum pressure to effectively prevent air from being drawing into and through the valve during the procedure. *Supra* ¶¶138-144.

204. Accordingly, a person of ordinary skill in the art would have been motivated to ensure that Hartley's valve is configured to remain sealed when the rotary actuator is in the first position, even when a vacuum pressure is applied to a volume outside of the valve's lumen. *See, e.g.,* Ex. 1006 (Hartley) at [0003],

[0006]. A person of ordinary skill in the art would have accomplished such a seal by ensuring that the torsion spring coupled to the rotary actuator was strong enough to resist any forces caused by the negative pressure. The suction force from the aspiration catheter would not be applied in the correct direction to move the string but may, in fact, help to pull the valve inward and even increase the strength of the seal. Thus, Hartley's valve is configured to remain constricted and sealed when vacuum pressure is applied to a volume outside the lumen and adjacent to either a first end or a second end of the tubular member.

205. In addition, the only description in the '921 patent that I see regarding the valve's ability to seal in the presence of vacuum pressure is the following statement: "due to the narrowing shape of the elongate member 132 when the constricting mechanism 141 is in the first configuration, a vacuum applied to the portions of the delivery device 100 distal to the axis 152 draws the elongate member 132 towards the first configuration and can, in some embodiments, increase the strength, robustness, and/or strength of the seal of the valve 104." Ex. 1001 ('921 patent) at 10:50-60. Notably, Hartley's elongate member (i.e., the cylindrical diaphragm 8) also has a "narrowing shape" when the actuator is in the first (i.e., constricted) configuration:

’921 Patent	Hartley
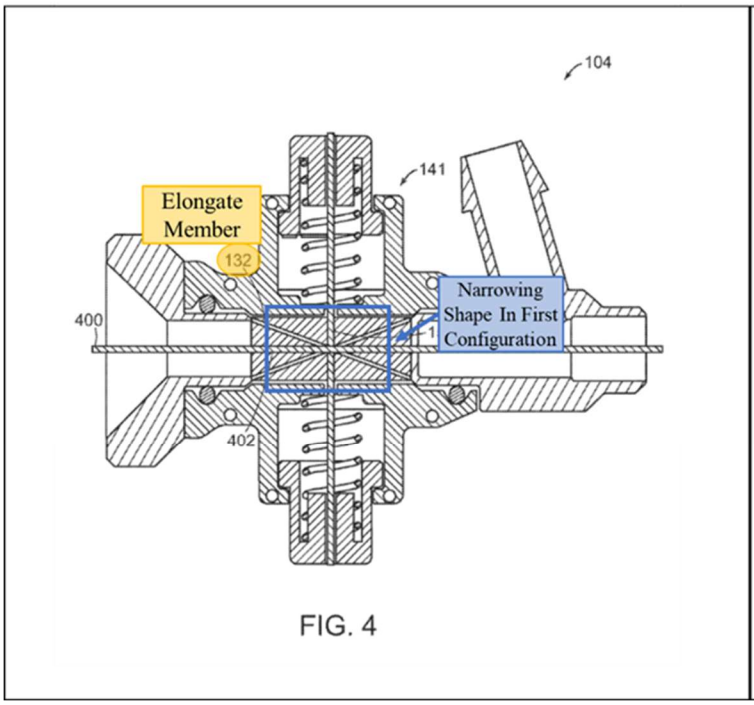	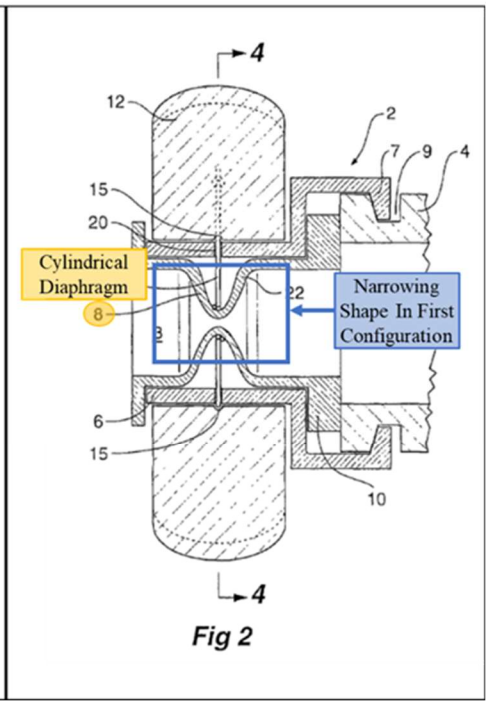

Id. at Fig. 4 (left); Ex. 1006 (Hartley) at [0031], Fig. 2[4] (right). Thus Hartley’s valve has the same structure, features, and function as those that the ’921 patent describes as enabling the valve to seal in the presence of vacuum pressure. A person of ordinary skill would have expected Hartley’s valve to remain closed even when subjected to negative pressure on one side of the valve due to the shape of the valve and due to the elastomeric properties of the diaphragm.

[4] Figure 2 of Hartley shows the valve in a “partially constricted position.” Ex. 1006 (Hartley) [0026]. However, a person of ordinary skill in the art would have recognized that the cylindrical diaphragm would have an even more narrowing shape in the fully constricted position, where the diaphragm is completely constricted. *See id.* at [0037] (Hartley disclosing that the valve “can close completely down to be self sealing”).

206. If Hartley's valve did not maintain its seal under vacuum pressure, it would have been obvious for a person of ordinary skill in the art to adjust Hartley's valve to ensure that it could maintain a seal in the presence of vacuum pressure. For example, the person of ordinary skill in the art could have adjusted the spring strength of the torsion spring added from Eller to apply additional force to seal the valve, they could have adjusted the resilience and compressibility of the cylindrical diaphragm that forms the valve's lumen, and/or they could have adjusted the shape, flexibility, and/or dimensions of the string to more closely conform to the shape of the seal module and any tool(s) inserted through the valve. A person of ordinary skill in the art would have been motivated to do so because the purpose of Hartley's hemostasis valve is to prevent leakage when other devices, or no devices, are inserted, and whether the valve is exposed to positive pressure or vacuum pressure. A person of ordinary skill in the art could have simply adjusted the strength of the torsion spring in several ways, including selecting a different material, modifying its dimensions, or winding the spring more tightly. These simple changes were well within the skill of a person of ordinary skill in the art and these adjustments in material or configuration would have had predictable results. As I explained previously, a person of ordinary skill in the art would have reasonably expected success in selecting an appropriate material for the elongate member in view of the range of suitable materials disclosed in the prior art. *Supra* ¶94. A person of

ordinary skill in the art would have reasonably expected success in adjusting the size, shape, mechanical properties, and/or dimensions of Hartley's string to improve the sealing of the valve lumen. A person of ordinary skill could have adjusted the string in several ways, including selecting a different material or dimensions for the string and/or shortening or lengthening the string to adjust the amount of tension applied by rotation of the actuator. These simple changes were well within the skill of a person of ordinary skill in the art and these adjustments in material or configuration would have had predictable results. Therefore, Hartley in combination with Eller renders claim 6 obvious.

F. <u>Claim 9</u>

207. Claim 9 recites: "The valve of claim 1 wherein, in the first position, the actuator pulls the filament to circumferentially constrict the elongate member such that the lumen is constricted and sealed." Hartley discloses the additional limitations recited in Claim 9, and therefore, Hartley combined with Eller renders claim 9 obvious.

208. Hartley discloses that "[r]otation of the rotary actuator 12 with respect to the cylindrical housing 6 will cause the string 14 to be pulled in both directions at once and hence the cylindrical diaphragm 8 to be constricted":

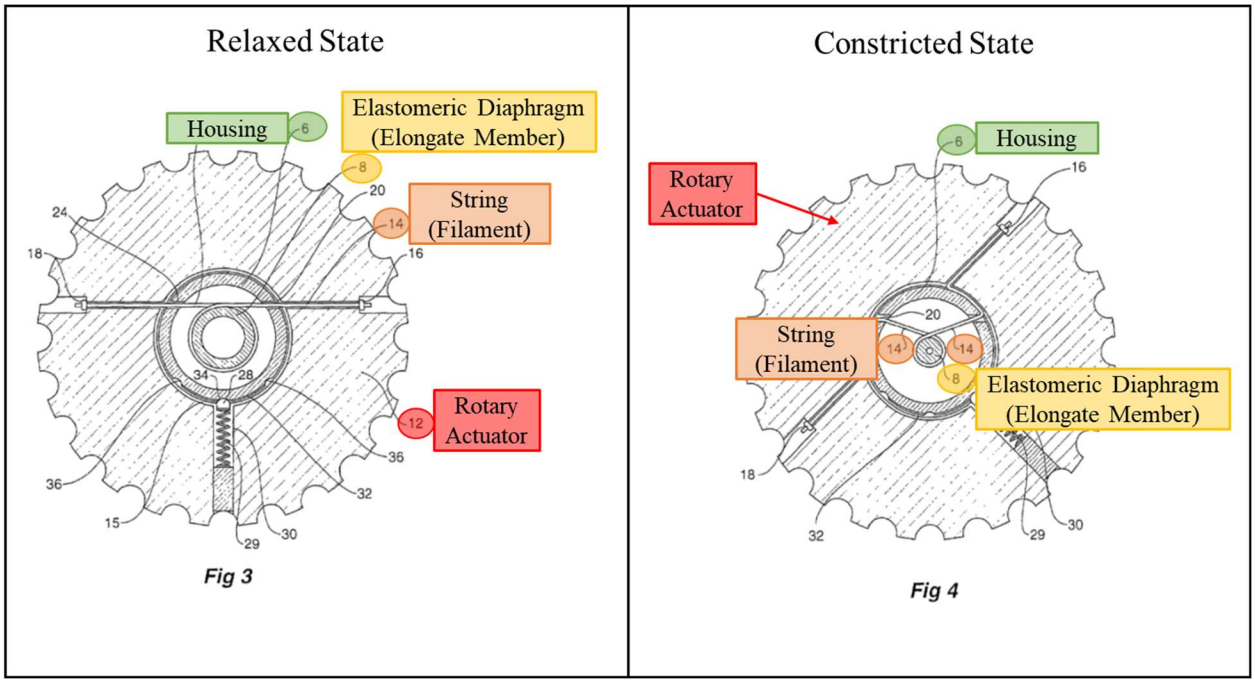

Ex. 1006 (Hartley) at [0031], Figs. 3-4. In other words, when Hartley's actuator is in the in first (i.e., constricted) position, the portions of the actuator that are secured to the string at knots 16 and 18 (i.e., the first and second actuator members) "pull the [string] to circumferentially constrict the tubular member such that the lumen is constricted and sealed." Hartley therefore discloses the additional limitations of Claim 9.

G. <u>Claim 15</u>

209. Claim 15 recites:

> 15. A valve, comprising:
> an elongate member defining a lumen;
> a filament coupled to the elongate member;
> an actuator coupled to the filament, wherein the actuator is moveable between (a) a first position wherein the lumen is constricted and sealed and (b) a second position wherein the lumen is at least partially open; and

a biasing member configured to bias the actuator to the first position.

As shown, Claim 15 repeats the limitations found in Claim 1 with two exceptions. First, Claim 15 requires the "filament" to be "coupled to the elongate member" and "coupled to" the actuator, while Claim 1 requires the actuator to be "coupled to the elongate member via a filament." Second, Claim 15 does not require an "active tensioning mechanism" like Claim 1. Hartley discloses the unique limitations recited in Claim 15, and therefore, Hartley combined with Eller renders claim 15 obvious.

210. As I explained with respect to Claim 1, Hartley's string is coupled to the elongate member (i.e., by wrapping the string around the member) and the actuator (via knots). *Supra* ¶¶183-184. Therefore, Hartley's string is coupled to the elongate member and actuator. Hartley and Eller disclose the other limitations in Claim 15 for the reasons presented in Claim 1.

H. <u>Claim 16</u>

211. Claim 16 recites: "The valve of claim 15 wherein the filament extends at least partially around the elongate member." Claim 1 includes this same limitation. Therefore, Hartley in combination with Eller renders this claim obvious for the reasons provided in Claim 1. *Supra* ¶¶183-184.

I. Claim 17

212. Claim 17 recites: "The valve of claim 16 wherein, in the first position, the actuator pulls the filament to circumferentially constrict the elongate member such that the lumen is constricted and sealed." Claim 9 includes this same limitation. Therefore, Hartley in combination with Eller renders this claim obvious for the reasons provided in Claim 9. *Supra* ¶¶207-208.

J. Claim 18

213. Claim 18 recites: "The valve of claim 15 wherein the elongate member is pliable." Claim 2 included this same limitation. Therefore, Hartley in combination with Eller renders this claim obvious for the reasons provided in Claim 2. *Supra* ¶¶194-195.

K. Claim 21

214. Claim 21 recites:

> 21. A valve, comprising:
> an elongate member defining a lumen;
> a filament coupled to the elongate member; and
> an actuator coupled to the elongate member, wherein the actuator is moveable between (a) a first position in which the actuator pulls the filament to collapse the elongate member such that the lumen is constricted and sealed and (b) a second position wherein the lumen is at least partially open; and
> a biasing member configured to bias the actuator to the first position.

Claim 21 is similar to Claim 15, which two insignificant differences. First, Claim 21 requires an "actuator coupled to the elongate member," while Claim 15 requires

"an actuator coupled to the filament." However, Claim 1 requires an "actuator coupled to the elongate member," so I have already addressed this limitation. Second, Claim 21 specifies that the "actuator pulls the filament to collapse the elongate member." Claim 9 requires this same limitation, so I have already addressed this limitation as well.

215. Hartley's actuators are coupled to the elongate member through the string (filament), which wraps around the elongate member and is attached by knots to the actuators, as explained in Claim 1. *Supra* ¶¶183-184. Hartley's actuator also pulls the filament to collapse the elongate member, as I explained in Claim 9. *Supra* ¶¶207-208. Hartley combined with Eller renders the remaining limitations of claim 21 obvious for the reasons provided in claim 1.

L. <u>Claim 22</u>

216. Claim 22 recites: "The valve of claim 21 wherein the elongate member is pliable, and wherein the filament extends at least partially around the elongate member." Claim 22 combines limitations found in Claim 1 and Claim 2. Therefore, Hartley in combination with Eller renders this claim obvious for the reasons provided in Claims 1 and 2. *Supra* ¶¶183-184, 194-195.

M. <u>Claim 23</u>

217. Claim 23 recites: "The valve of claim 21 wherein the elongate member is pliable, and wherein the filament is looped around the elongate member." Claim

23 combines the limitations found in Claim 2 and Claim 3. Therefore, Hartley in combination with Eller renders this claim obvious for the reasons provided in Claims 2 and 3. *Supra* ¶¶194-197.

N. Claim 24

218. Claim 24 recites: "The valve of claim 21 wherein the actuator does not substantially pull the filament in the second position such that the elongate member can expand." Hartley discloses this limitation and therefore Hartley combined with Eller renders claim 21 obvious.

219. Hartley discloses that "[r]otation of the rotary actuator back to the central position where the detent ball 28 is received in depression 34 will cause the sutures to loosen again so that the resilient cylindrical diaphragm will retain its original shape as shown in FIGS. 1 and 3." Ex. 1007 (Hartley) at [0034]. Accordingly, Hartley's actuators do not substantially pull the filament when in the second position, allowing the elongate member to expand to an uncollapsed configuration.

VIII. SECONDARY CONSIDERATIONS

220. I am not aware of any secondary considerations of nonobviousness relating to the claims of the '921 patent. The devices claimed in the '921 patent are not new, and were invented long before September 2017. Therefore, I am not aware of any long-felt need in the industry, unexpected results, skepticism of the

invention, or teaching away from the invention. I am also not aware of any praise for the alleged inventions or copying of the alleged inventions by other companies.

221. I am aware that Patent Owner argued in the related Litigation that the valve described in the ’921 patent improved on the prior art hemostasis valves because it could be operated with one hand. However, almost all prior art hemostasis valves could be, and often were, operated with one hand. For example, a passive valve required no manipulation by the physician and was always operated with one hand. Similarly, physicians would typically twist the operable portion of a rotating hemostasis valve with one hand to open and close the valve. Simply put, a hemostasis valve that could be operated with one hand was already known and being sold so there was no long-felt need for such a valve. If Patent Owner identifies any alleged evidence of secondary considerations in the future, I reserve the right to respond to that information.

IX. CONCLUSION

222. For the foregoing reasons, it is my opinion that Claims 1-7, 9-10, 15-18, and 20-24 of the ’921 patent are not patentable because they are anticipated by or would have been obvious in view of the prior art discussed above and the knowledge of one of ordinary skill in the art at the time of the alleged claimed inventions.

223. I reserve the right to supplement my opinions in the future to address or respond to any arguments that Patent Owner may raise, as well as new information, including, but not limited to, any claim constructions advanced by Patent Owner or adopted by the Board in the Institution Decision, and respond to any alleged secondary considerations as they become available to me.

224. I declare that the foregoing is true and correct, and further that the foregoing statements were made with the knowledge that willful, false statements and the like so made are punishable by fine or imprisonment, or both, under Section 1001 of Title 18 of the United States Code.

Executed on March 9, 2025 in Glen Ellen, CA.

troy thornton

Troy Thornton