US011554005B2

(12) **United States Patent**
Merritt et al.

(10) **Patent No.: US 11,554,005 B2**
(45) **Date of Patent: Jan. 17, 2023**

(54) **SYSTEM FOR TREATING EMBOLISM AND ASSOCIATED DEVICES AND METHODS**

(71) Applicant: **Inari Medical, Inc.**, Irvine, CA (US)

(72) Inventors: **Ben Merritt**, San Clemente, CA (US); **Jacqueline Macias**, Fullerton, CA (US); **Brian Michael Strauss**, San Clemente, CA (US); **Thomas Tu**, Louisville, KY (US)

(73) Assignee: **Inari Medical, Inc.**, Irvine, CA (US)

(*) Notice: Subject to any disclaimer, the term of this patent is extended or adjusted under 35 U.S.C. 154(b) by 0 days.

(21) Appl. No.: **17/865,280**

(22) Filed: **Jul. 14, 2022**

(65) **Prior Publication Data**

US 2022/0346800 A1 Nov. 3, 2022

Related U.S. Application Data

(63) Continuation of application No. 16/536,185, filed on Aug. 8, 2019.

(Continued)

(51) **Int. Cl.**
A61F 2/01 (2006.01)
A61B 17/12 (2006.01)

(Continued)

(52) **U.S. Cl.**
CPC ***A61F 2/01*** (2013.01); ***A61B 17/12109*** (2013.01); ***A61M 1/815*** (2021.05);

(Continued)

(58) **Field of Classification Search**
CPC A61B 17/12109; A61B 17/221; A61B 2017/22034; A61B 2017/22079;

(Continued)

(56) **References Cited**

U.S. PATENT DOCUMENTS

2,846,179 A 8/1958 Monckton
2,955,592 A 10/1960 Maclean

(Continued)

FOREIGN PATENT DOCUMENTS

AU 2015210338 8/2015
CN 102186427 9/2011

(Continued)

OTHER PUBLICATIONS

European Patent Application No. 13838945.7, Extended European Search Report, 9 pages, dated Apr. 15, 2016.

(Continued)

Primary Examiner — Susan S Su
Assistant Examiner — Eric Rassavong
(74) *Attorney, Agent, or Firm* — Perkins Coie LLP

(57) **ABSTRACT**

Systems and methods for the intravascular treatment of clot material within a blood vessel of a human patient are disclosed herein. A method in accordance with embodiments of the present technology can include, for example, positioning a distal portion of a catheter proximate to the clot material within the blood vessel. The method can further include coupling a pressure source to the catheter via a tubing subsystem including a valve or other fluid control device and, while the valve is closed, activating the pressure source to charge a vacuum. The valve can then be opened to apply the vacuum to the catheter to thereby aspirate at least a portion of the clot material from the blood vessel and into the catheter.

15 Claims, 38 Drawing Sheets

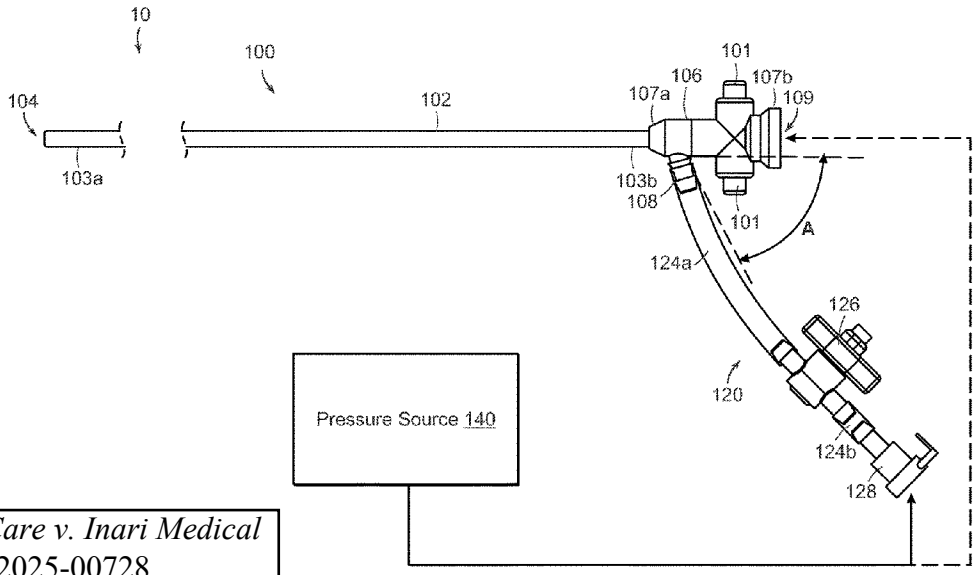

Imperative Care v. Inari Medical
IPR2025-00728
Imperative Care Ex. 1033

Related U.S. Application Data

(60) Provisional application No. 62/718,248, filed on Aug. 13, 2018, provisional application No. 62/718,269, filed on Aug. 13, 2018.

(51) **Int. Cl.**
A61B 17/22 (2006.01)
A61B 17/221 (2006.01)
A61M 1/00 (2006.01)
A61M 25/10 (2013.01)

(52) **U.S. Cl.**
CPC ***A61M 1/84*** (2021.05); *A61B 17/221* (2013.01); *A61B 2017/22034* (2013.01); *A61B 2017/22079* (2013.01); *A61B 2217/005* (2013.01); *A61M 1/79* (2021.05); *A61M 25/10* (2013.01)

(58) **Field of Classification Search**
CPC A61B 2217/005; A61F 2/01; A61M 1/84; A61M 25/10
See application file for complete search history.

(56) **References Cited**

U.S. PATENT DOCUMENTS

3,088,363 A 5/1963 Sparks
3,197,173 A 7/1965 Taubenheim
3,435,826 A 4/1969 Fogarty
3,515,137 A 6/1970 Santomieri
3,892,161 A 7/1975 Sokol
3,923,065 A 12/1975 Nozick et al.
4,030,503 A 6/1977 Clark, III
4,034,642 A 7/1977 Iannucci et al.
4,222,380 A 9/1980 Terayama
4,243,040 A 1/1981 Beecher
4,287,808 A 9/1981 Leonard et al.
4,324,262 A 4/1982 Hall
4,393,872 A 7/1983 Reznik et al.
4,469,100 A 9/1984 Hardwick
4,523,738 A 6/1985 Raftis et al.
4,551,862 A 11/1985 Haber
4,604,094 A 8/1986 Shook
4,643,184 A 2/1987 Mobin-Uddin
4,646,736 A 3/1987 Auth et al.
4,650,466 A 3/1987 Luther
4,776,337 A 10/1988 Palmaz
4,790,812 A 12/1988 Hawkins, Jr. et al.
4,863,440 A 9/1989 Chin et al.
4,870,953 A 10/1989 DonMichael et al.
4,883,458 A 11/1989 Shiber
4,886,062 A 12/1989 Wiktor
4,890,611 A 1/1990 Monfort et al.
4,898,575 A 2/1990 Fischell et al.
4,946,440 A 8/1990 Hall
4,960,259 A 10/1990 Sunnanvader et al.
4,978,341 A 12/1990 Niederhauser
5,059,178 A 10/1991 Ya
5,100,423 A 3/1992 Fearnot
5,127,626 A 7/1992 Hilal et al.
5,129,910 A 7/1992 Phan et al.
5,135,484 A 8/1992 Wright
5,154,724 A 10/1992 Andrews
5,192,274 A 3/1993 Bierman
5,192,286 A 3/1993 Phan et al.
5,192,290 A 3/1993 Hilal
5,197,485 A 3/1993 Grooters
5,329,923 A 7/1994 Lundquist
5,360,417 A 11/1994 Gravener et al.
5,364,345 A 11/1994 Lowery et al.
5,376,101 A 12/1994 Green et al.
5,383,887 A 1/1995 Nadal
5,389,100 A 2/1995 Bacich et al.
5,419,774 A 5/1995 Willard et al.
5,443,443 A 8/1995 Shiber
5,456,667 A 10/1995 Ham et al.
5,476,450 A 12/1995 Ruggio
5,490,859 A 2/1996 Mische et al.
5,496,365 A 3/1996 Sgro
5,527,326 A 6/1996 Hermann et al.
5,549,626 A 8/1996 Miller et al.
5,591,137 A 1/1997 Stevens
5,662,703 A 9/1997 Yurek et al.
5,746,758 A 5/1998 Nordgren et al.
5,749,858 A 5/1998 Cramer
5,769,816 A 6/1998 Barbut et al.
5,782,817 A 7/1998 Franzel et al.
5,800,457 A 9/1998 Gelbfish
5,827,229 A 10/1998 Auth et al.
5,846,251 A 12/1998 Hart
5,860,938 A 1/1999 Lafontaine et al.
5,873,866 A 2/1999 Kondo et al.
5,873,882 A 2/1999 Straub et al.
5,876,414 A 3/1999 Straub
5,895,406 A 4/1999 Gray et al.
5,911,710 A 6/1999 Barry et al.
5,911,733 A 6/1999 Parodi
5,911,754 A 6/1999 Kanesaka et al.
5,941,869 A 8/1999 Patterson et al.
5,947,985 A 9/1999 Imram
5,954,737 A 9/1999 Lee
5,971,938 A 10/1999 Hart et al.
5,972,019 A 10/1999 Engelson et al.
5,974,938 A 11/1999 Lloyd
5,989,233 A 11/1999 Yoon
5,993,483 A 11/1999 Gianotti
6,030,397 A 2/2000 Moneti et al.
6,066,158 A 5/2000 Engelson et al.
6,068,645 A 5/2000 Tu
6,126,635 A 10/2000 Simpson et al.
6,142,987 A 11/2000 Tsugita
6,146,396 A 11/2000 Konya et al.
6,146,403 A 11/2000 St. Germain
6,152,946 A 11/2000 Broome et al.
6,156,055 A 12/2000 Ravenscroft
6,159,230 A 12/2000 Samuels
6,165,196 A 12/2000 Stack et al.
6,168,579 B1 1/2001 Tsugita
6,179,859 B1 1/2001 Bates et al.
6,221,006 B1 4/2001 Dubrul et al.
6,228,060 B1 5/2001 Howell
6,238,412 B1 5/2001 Dubrul et al.
6,245,078 B1 6/2001 Ouchi
6,245,089 B1 6/2001 Daniel et al.
6,254,571 B1 7/2001 Hart
6,258,115 B1 7/2001 Dubrul
6,264,663 B1 7/2001 Cano
6,306,163 B1 10/2001 Fitz
6,322,572 B1 11/2001 Lee
6,350,271 B1 2/2002 Kurz et al.
6,361,545 B1 3/2002 Macoviak et al.
6,364,895 B1 4/2002 Greenhalgh
6,368,339 B1 4/2002 Amplatz
6,383,205 B1 5/2002 Samson et al.
6,402,771 B1 6/2002 Palmer et al.
6,413,235 B1 7/2002 Parodi
6,423,032 B2 7/2002 Parodi
6,432,122 B1 8/2002 Gilson et al.
6,458,103 B1 10/2002 Albert et al.
6,475,236 B1 11/2002 Roubin et al.
6,485,502 B2 11/2002 Don Michael
6,508,782 B1 1/2003 Evans et al.
6,511,492 B1 1/2003 Rosenbluth et al.
6,514,273 B1 2/2003 Voss et al.
6,530,923 B1 3/2003 Dubrul et al.
6,530,935 B2 3/2003 Wensel et al.
6,544,276 B1 4/2003 Azizi
6,544,278 B1 4/2003 Vrba et al.
6,544,279 B1 4/2003 Hopkins et al.
6,551,342 B1 4/2003 Shen et al.
6,564,828 B1 5/2003 Ishida
6,569,181 B1 5/2003 Burns
6,575,995 B1 6/2003 Huter et al.
6,589,263 B1 7/2003 Hopkins et al.

(56) **References Cited**

U.S. PATENT DOCUMENTS

6,596,011	B2	7/2003	Johnson et al.
6,602,271	B2	8/2003	Adams et al.
6,605,074	B2	8/2003	Zadno-azizi et al.
6,605,102	B1	8/2003	Mazzocchi et al.
6,610,077	B1	8/2003	Hancock et al.
6,620,148	B1	9/2003	Tsugita
6,620,179	B2	9/2003	Brook et al.
6,620,182	B1	9/2003	Khosravi et al.
6,623,460	B1	9/2003	Heck
6,635,068	B1	10/2003	Dubrul et al.
6,645,222	B1	11/2003	Parodi et al.
6,660,013	B2	12/2003	Rabiner et al.
6,660,014	B2	12/2003	Demarais et al.
6,663,650	B2	12/2003	Sepetka et al.
6,692,504	B2	2/2004	Kurz et al.
6,699,260	B2	3/2004	Dubrul et al.
6,702,830	B1	3/2004	Demarais et al.
6,719,717	B1	4/2004	Johnson et al.
6,755,847	B2	6/2004	Eskuri
6,767,353	B1	7/2004	Shiber
6,790,204	B2	9/2004	Zadno-azizi et al.
6,800,080	B1	10/2004	Bates
6,824,545	B2	11/2004	Sepetka et al.
6,824,550	B1	11/2004	Noriega et al.
6,824,553	B1	11/2004	Gene et al.
6,830,561	B2	12/2004	Jansen et al.
6,846,029	B1	1/2005	Ragner et al.
6,902,540	B2	6/2005	Dorros et al.
6,939,361	B1	9/2005	Kleshinski
6,942,682	B2	9/2005	Vrba et al.
6,945,977	B2	9/2005	Demarais et al.
6,960,189	B2	11/2005	Bates et al.
6,960,222	B2	11/2005	Vo et al.
7,004,931	B2	2/2006	Hogendijk
7,004,954	B1	2/2006	Voss et al.
7,036,707	B2	5/2006	Aota et al.
7,041,084	B2	5/2006	Fotjik
7,052,500	B2	5/2006	Bashiri et al.
7,056,328	B2	6/2006	Arnott
7,063,707	B2	6/2006	Bose et al.
7,069,835	B2	7/2006	Nishri et al.
7,094,249	B1	8/2006	Thomas et al.
7,179,273	B1	2/2007	Palmer et al.
7,223,253	B2	5/2007	Hogendijk
7,232,432	B2	6/2007	Fulton, III et al.
7,244,243	B2	7/2007	Lary
7,285,126	B2	10/2007	Sepetka et al.
7,300,458	B2	11/2007	Henkes et al.
7,306,618	B2	12/2007	Demond et al.
7,320,698	B2	1/2008	Eskuri
7,323,002	B2	1/2008	Johnson et al.
7,331,980	B2	2/2008	Dubrul et al.
7,534,234	B2	5/2009	Fotjik
7,578,830	B2	8/2009	Kusleika et al.
7,621,870	B2	11/2009	Berrada et al.
7,674,247	B2	3/2010	Fotjik
7,691,121	B2	4/2010	Rosenbluth et al.
7,695,458	B2	4/2010	Belley et al.
7,763,010	B2	7/2010	Evans et al.
7,766,934	B2	8/2010	Pal et al.
7,775,501	B2	8/2010	Kees
7,780,696	B2	8/2010	Daniel et al.
7,905,877	B1	3/2011	Oscar et al.
7,905,896	B2	3/2011	Straub
7,938,809	B2	5/2011	Lampropoulos et al.
7,938,820	B2	5/2011	Webster et al.
7,967,790	B2	6/2011	Whiting et al.
7,976,511	B2	7/2011	Fotjik
7,993,302	B2	8/2011	Hebert et al.
7,993,363	B2	8/2011	Demond et al.
8,043,313	B2	10/2011	Krolik et al.
8,052,640	B2	11/2011	Fiorella et al.
8,057,496	B2	11/2011	Fischer, Jr.
8,057,497	B1	11/2011	Raju et al.
8,066,757	B2	11/2011	Ferrera et al.
8,070,769	B2	12/2011	Broome
8,070,791	B2	12/2011	Ferrera et al.
8,075,510	B2	12/2011	Aklog et al.
8,088,140	B2	1/2012	Ferrera et al.
8,092,486	B2	1/2012	Berrada et al.
8,100,935	B2	1/2012	Rosenbluth et al.
8,109,962	B2	2/2012	Pal
8,118,829	B2	2/2012	Garrison et al.
8,197,493	B2	6/2012	Ferrera et al.
8,246,641	B2	8/2012	Osborne et al.
8,261,648	B1	9/2012	Marchand et al.
8,267,897	B2	9/2012	Wells
8,298,257	B2	10/2012	Sepetka et al.
8,317,748	B2	11/2012	Fiorella et al.
8,337,450	B2	12/2012	Fotjik
RE43,902	E	1/2013	Hopkins et al.
8,357,178	B2	1/2013	Grandfield et al.
8,361,104	B2	1/2013	Jones et al.
8,409,215	B2	4/2013	Sepetka et al.
8,486,105	B2	7/2013	Demond et al.
8,491,539	B2	7/2013	Fotjik
8,512,352	B2	8/2013	Martin
8,535,334	B2	9/2013	Martin
8,545,526	B2	10/2013	Martin et al.
8,568,432	B2	10/2013	Straub
8,574,262	B2	11/2013	Ferrera et al.
8,579,915	B2	11/2013	French et al.
8,585,713	B2	11/2013	Ferrera et al.
8,608,754	B2	12/2013	Wensel et al.
8,657,867	B2	2/2014	Dorn et al.
8,696,622	B2	4/2014	Fiorella et al.
8,715,314	B1	5/2014	Janardhan et al.
8,721,714	B2	5/2014	Kelley
8,771,289	B2	7/2014	Mohiuddin et al.
8,777,893	B2 *	7/2014	Malewicz A61M 39/0613 604/32
8,784,441	B2	7/2014	Rosenbluth et al.
8,784,442	B2	7/2014	Jones et al.
8,795,305	B2	8/2014	Martin et al.
8,795,345	B2	8/2014	Grandfield et al.
8,801,748	B2	8/2014	Martin
8,814,927	B2	8/2014	Shin et al.
8,820,207	B2	9/2014	Marchand et al.
8,826,791	B2	9/2014	Thompson et al.
8,828,044	B2	9/2014	Aggerholm et al.
8,833,224	B2	9/2014	Thompson et al.
8,845,621	B2	9/2014	Fotjik
8,852,226	B2	10/2014	Gilson et al.
8,939,991	B2	1/2015	Krolik et al.
8,945,143	B2	2/2015	Ferrera et al.
8,945,172	B2	2/2015	Ferrera et al.
8,956,384	B2	2/2015	Berrada et al.
8,992,504	B2	3/2015	Castella et al.
9,005,172	B2	4/2015	Chung
9,028,401	B1	5/2015	Bacich et al.
9,101,382	B2	8/2015	Krolik et al.
9,125,683	B2	9/2015	Farhangnia et al.
9,126,016	B2	9/2015	Fulton
9,149,609	B2	10/2015	Ansel et al.
9,155,552	B2	10/2015	Ulm, III
9,161,766	B2	10/2015	Slee et al.
9,173,668	B2	11/2015	Ulm, III
9,186,487	B2	11/2015	Dubrul et al.
9,204,887	B2	12/2015	Cully et al.
9,358,037	B2	1/2016	Farhangnia et al.
9,259,237	B2	2/2016	Quick et al.
9,283,066	B2	3/2016	Hopkins et al.
9,351,747	B2	5/2016	Kugler et al.
9,439,664	B2	9/2016	Sos
9,439,751	B2	9/2016	White et al.
9,456,834	B2	10/2016	Folk
9,463,035	B1	10/2016	Greenhalgh et al.
9,463,036	B2	10/2016	Brady et al.
9,526,864	B2	12/2016	Quick
9,526,865	B2	12/2016	Quick
9,566,424	B2 *	2/2017	Pessin A61M 39/06
9,579,116	B1	2/2017	Nguyen et al.
9,616,213	B2	4/2017	Furnish et al.
9,636,206	B2	5/2017	Nguyen et al.

(56) **References Cited**

U.S. PATENT DOCUMENTS

9,643,035 B2 5/2017 Mastenbroek
9,700,332 B2 7/2017 Marchand et al.
9,717,514 B2 8/2017 Martin et al.
9,717,519 B2 8/2017 Rosenbluth et al.
9,744,024 B2 8/2017 Nguyen et al.
9,757,137 B2 9/2017 Krolik et al.
9,844,386 B2 12/2017 Nguyen et al.
9,844,387 B2 12/2017 Marchand et al.
9,848,975 B2 12/2017 Hauser
9,849,014 B2 12/2017 Kusleika
9,962,178 B2 5/2018 Greenhalgh et al.
9,999,493 B2 6/2018 Nguyen et al.
10,004,531 B2 6/2018 Rosenbluth et al.
10,010,335 B2 7/2018 Greenhalgh et al.
10,016,266 B2 * 7/2018 Hauser A61B 17/221
10,028,759 B2 7/2018 Wallace et al.
10,045,790 B2 8/2018 Cox et al.
10,098,651 B2 10/2018 Marchand et al.
10,130,385 B2 * 11/2018 Farhangnia A61M 25/04
10,226,263 B2 3/2019 Look et al.
10,238,406 B2 3/2019 Cox et al.
10,271,864 B2 * 4/2019 Greenhalgh A61B 10/04
10,327,883 B2 6/2019 Yachia
10,335,186 B2 7/2019 Rosenbluth et al.
10,342,571 B2 7/2019 Marchand et al.
10,349,960 B2 7/2019 Quick
10,383,644 B2 8/2019 Molaei et al.
10,478,535 B2 11/2019 Ogle
10,524,811 B2 1/2020 Marchand et al.
10,588,655 B2 3/2020 Rosenbluth et al.
10,695,159 B2 6/2020 Hauser
10,709,471 B2 7/2020 Rosenbluth et al.
10,799,331 B2 10/2020 Hauser
10,912,577 B2 2/2021 Marchand et al.
11,000,682 B2 * 5/2021 Merritt A61M 39/0613
11,058,445 B2 7/2021 Cox et al.
11,058,451 B2 7/2021 Marchand et al.
11,147,571 B2 10/2021 Cox et al.
11,154,314 B2 10/2021 Quick
11,433,218 B2 9/2022 Quick et al.
2001/0004699 A1 6/2001 Gittings et al.
2001/0041909 A1 11/2001 Tsugita et al.
2001/0049486 A1 12/2001 Evans et al.
2001/0051810 A1 12/2001 Dubrul et al.
2002/0022858 A1 2/2002 Demond et al.
2002/0022859 A1 2/2002 Hogendijk
2002/0026211 A1 2/2002 Khosravi et al.
2002/0032455 A1 3/2002 Boock et al.
2002/0049452 A1 4/2002 Kurz et al.
2002/0095161 A1 7/2002 Dhindsa
2002/0095171 A1 7/2002 Belef
2002/0111648 A1 8/2002 Kusleika et al.
2002/0120277 A1 8/2002 Hauschild et al.
2002/0147458 A1 10/2002 Hiblar et al.
2002/0151918 A1 10/2002 Lafontaine et al.
2002/0156457 A1 10/2002 Fisher
2002/0161392 A1 10/2002 Dubrul
2002/0169474 A1 11/2002 Kusleika
2002/0173819 A1 11/2002 Leeflang et al.
2002/0188276 A1 12/2002 Evans et al.
2003/0083693 A1 5/2003 Daniel et al.
2003/0100919 A1 5/2003 Hopkins et al.
2003/0114875 A1 6/2003 Sjostrom
2003/0116731 A1 6/2003 Hartley
2003/0125663 A1 7/2003 Coleman et al.
2003/0135230 A1 7/2003 Massey et al.
2003/0135258 A1 7/2003 Andreas et al.
2003/0153873 A1 8/2003 Luther et al.
2003/0153973 A1 8/2003 Soun et al.
2003/0168068 A1 9/2003 Poole et al.
2003/0176884 A1 9/2003 Berrada et al.
2003/0191516 A1 10/2003 Weldon et al.
2003/0208224 A1 11/2003 Broome
2003/0216774 A1 11/2003 Larson
2004/0039412 A1 2/2004 Isshiki et al.
2004/0068288 A1 4/2004 Palmer et al.
2004/0073243 A1 4/2004 Sepetka et al.
2004/0098033 A1 5/2004 Leeflang et al.
2004/0122359 A1 6/2004 Wenz et al.
2004/0127936 A1 7/2004 Salahieh et al.
2004/0133232 A1 7/2004 Rosenbluth et al.
2004/0138525 A1 7/2004 Saadat et al.
2004/0138692 A1 7/2004 Phung et al.
2004/0167567 A1 8/2004 Cano et al.
2004/0199201 A1 10/2004 Kellett et al.
2004/0199202 A1 10/2004 Dubrul et al.
2004/0260344 A1 12/2004 Lyons et al.
2004/0267272 A1 12/2004 Henniges et al.
2005/0033172 A1 2/2005 Dubrul et al.
2005/0038468 A1 2/2005 Panetta et al.
2005/0055047 A1 3/2005 Greenhalgh
2005/0085769 A1 4/2005 MacMahon et al.
2005/0085826 A1 4/2005 Nair et al.
2005/0085846 A1 4/2005 Carrison et al.
2005/0085849 A1 4/2005 Sepetka et al.
2005/0119668 A1 6/2005 Teague et al.
2005/0177132 A1 8/2005 Lentz et al.
2005/0187570 A1 8/2005 Nguyen et al.
2005/0283165 A1 12/2005 Gadberry
2005/0283166 A1 12/2005 Greenhalgh et al.
2005/0283186 A1 12/2005 Berrada et al.
2006/0020286 A1 1/2006 Niermann
2006/0042786 A1 3/2006 West
2006/0047286 A1 3/2006 West
2006/0074401 A1 4/2006 Ross
2006/0089533 A1 4/2006 Ziegler et al.
2006/0100662 A1 5/2006 Daniel et al.
2006/0155305 A1 7/2006 Freudenthal et al.
2006/0173525 A1 8/2006 Behl et al.
2006/0195137 A1 8/2006 Sepetka et al.
2006/0200221 A1 9/2006 Malewicz
2006/0224177 A1 10/2006 Finitsis
2006/0229645 A1 10/2006 Bonnette et al.
2006/0247500 A1 11/2006 Voegele et al.
2006/0253145 A1 11/2006 Lucas
2006/0276874 A1 12/2006 Wilson et al.
2006/0282111 A1 12/2006 Morsi
2006/0293696 A1 12/2006 Fahey et al.
2007/0010787 A1 1/2007 Hackett et al.
2007/0038225 A1 2/2007 Osborne
2007/0093744 A1 4/2007 Elmaleh
2007/0112374 A1 5/2007 Paul, Jr. et al.
2007/0118165 A1 5/2007 DeMello et al.
2007/0149996 A1 6/2007 Coughlin
2007/0161963 A1 7/2007 Smalling
2007/0179513 A1 8/2007 Deutsch
2007/0191866 A1 8/2007 Palmer et al.
2007/0198028 A1 8/2007 Miloslavski et al.
2007/0208361 A1 9/2007 Okushi et al.
2007/0208367 A1 9/2007 Fiorella et al.
2007/0213753 A1 9/2007 Waller
2007/0213765 A1 9/2007 Adams et al.
2007/0255252 A1 11/2007 Mehta
2007/0288054 A1 12/2007 Tanaka et al.
2008/0015541 A1 1/2008 Rosenbluth et al.
2008/0088055 A1 4/2008 Ross
2008/0157017 A1 7/2008 Macatangay et al.
2008/0167678 A1 7/2008 Morsi
2008/0183136 A1 7/2008 Lenker et al.
2008/0228209 A1 9/2008 DeMello et al.
2008/0234722 A1 9/2008 Bonnette et al.
2008/0262528 A1 10/2008 Martin
2008/0269798 A1 10/2008 Ramzipoor et al.
2008/0300466 A1 12/2008 Gresham
2009/0018566 A1 1/2009 Escudero et al.
2009/0054918 A1 2/2009 Henson
2009/0062841 A1 3/2009 Amplatz et al.
2009/0069828 A1 3/2009 Martin et al.
2009/0076417 A1 3/2009 Jones
2009/0160112 A1 6/2009 Ostrovsky
2009/0163846 A1 6/2009 Aklog et al.
2009/0182362 A1 7/2009 Thompson et al.
2009/0192495 A1 7/2009 Ostrovsky et al.
2009/0281525 A1 11/2009 Harding et al.

(56) **References Cited**

U.S. PATENT DOCUMENTS

2009/0292307 A1 11/2009 Razack
2009/0299393 A1 12/2009 Martin et al.
2010/0016837 A1 1/2010 Howat
2010/0030256 A1 2/2010 Dubrul et al.
2010/0042136 A1 2/2010 Berrada et al.
2010/0087844 A1 4/2010 Fischer, Jr.
2010/0087850 A1 4/2010 Razack
2010/0114113 A1 5/2010 Dubrul et al.
2010/0121312 A1 5/2010 Gielenz et al.
2010/0137846 A1 6/2010 Desai et al.
2010/0190156 A1 7/2010 Van Wordragen et al.
2010/0204712 A1 8/2010 Mallaby
2010/0217276 A1 8/2010 Garrison et al.
2010/0249815 A1 9/2010 Jantzen et al.
2010/0268264 A1 10/2010 Bonnette et al.
2010/0318178 A1 12/2010 Rapaport et al.
2011/0034987 A1 2/2011 Kennedy
2011/0054405 A1 3/2011 Whiting et al.
2011/0060212 A1 3/2011 Slee et al.
2011/0118817 A1 5/2011 Gunderson et al.
2011/0125181 A1 5/2011 Brady et al.
2011/0144592 A1 6/2011 Wong et al.
2011/0152823 A1 6/2011 Mohiuddin et al.
2011/0152993 A1 6/2011 Marchand et al.
2011/0160742 A1 6/2011 Ferrera et al.
2011/0160763 A1 6/2011 Ferrera et al.
2011/0190806 A1 8/2011 Wittens
2011/0196309 A1 8/2011 Wells
2011/0196414 A1 8/2011 Porter et al.
2011/0213290 A1 9/2011 Chin et al.
2011/0213403 A1 9/2011 Aboytes
2011/0224707 A1 9/2011 Miloslavski et al.
2011/0245807 A1 10/2011 Sakata et al.
2011/0251629 A1 10/2011 Galdonik et al.
2011/0264133 A1 10/2011 Hanlon et al.
2011/0265681 A1 11/2011 Allen et al.
2011/0288529 A1 11/2011 Fulton
2011/0288572 A1 11/2011 Martin
2011/0319917 A1 12/2011 Ferrera et al.
2012/0059309 A1 3/2012 di Palma et al.
2012/0059356 A1 3/2012 di Palma et al.
2012/0083824 A1 4/2012 Berrada et al.
2012/0083868 A1 4/2012 Shrivastava
2012/0089216 A1 4/2012 Rapaport et al.
2012/0101480 A1 4/2012 Ingle et al.
2012/0101510 A1 4/2012 Lenker et al.
2012/0138832 A1 6/2012 Townsend
2012/0143239 A1 6/2012 Aklog et al.
2012/0165919 A1 6/2012 Cox et al.
2012/0179181 A1 7/2012 Straub et al.
2012/0197277 A1 8/2012 Stinis
2012/0232655 A1 9/2012 Lorrison et al.
2012/0271105 A1 10/2012 Nakamura et al.
2012/0271231 A1 10/2012 Agrawal
2012/0277788 A1 11/2012 Cattaneo
2012/0310166 A1 12/2012 Huff
2013/0030460 A1 1/2013 Marks et al.
2013/0035628 A1 2/2013 Garrison et al.
2013/0046332 A1 2/2013 Jones et al.
2013/0066348 A1 3/2013 Fiorella et al.
2013/0092012 A1 4/2013 Marchand et al.
2013/0096571 A1 4/2013 Massicotte et al.
2013/0102996 A1 4/2013 Strauss
2013/0116708 A1 5/2013 Ziniti et al.
2013/0116721 A1 5/2013 Takagi et al.
2013/0126559 A1 5/2013 Cowan et al.
2013/0144326 A1 6/2013 Brady et al.
2013/0165871 A1 6/2013 Fiorella et al.
2013/0184703 A1 7/2013 Shireman et al.
2013/0197454 A1 8/2013 Shibata et al.
2013/0197567 A1 8/2013 Brady et al.
2013/0226196 A1 8/2013 Smith
2013/0281788 A1 10/2013 Garrison
2013/0289608 A1 10/2013 Tanaka et al.
2013/0317589 A1 11/2013 Martin et al.
2013/0345739 A1 12/2013 Brady et al.
2014/0005712 A1 1/2014 Martin
2014/0005713 A1 1/2014 Bowman
2014/0005715 A1 1/2014 Castella et al.
2014/0005717 A1 1/2014 Martin et al.
2014/0025048 A1 1/2014 Ward
2014/0031856 A1 1/2014 Martin
2014/0046133 A1* 2/2014 Nakamura A61B 1/0016 600/114
2014/0046243 A1 2/2014 Ray et al.
2014/0121672 A1 5/2014 Folk
2014/0155830 A1 6/2014 Bonnette et al.
2014/0155980 A1 6/2014 Turjman
2014/0180397 A1 6/2014 Gerberding et al.
2014/0155908 A1 7/2014 Rosenbluth et al.
2014/0188143 A1 7/2014 Martin et al.
2014/0236219 A1 8/2014 Dubrul et al.
2014/0243882 A1 8/2014 Ma
2014/0257253 A1 9/2014 Jemison
2014/0257363 A1 9/2014 Lippert
2014/0276403 A1 9/2014 Follmer et al.
2014/0296868 A1 10/2014 Garrison et al.
2014/0303658 A1 10/2014 Bonnette et al.
2014/0318354 A1 10/2014 Thompson et al.
2014/0324091 A1 10/2014 Rosenbluth
2014/0330286 A1 11/2014 Wallace et al.
2014/0336691 A1 11/2014 Jones et al.
2014/0343593 A1 11/2014 Chin et al.
2014/0364896 A1 12/2014 Consigny
2014/0371779 A1 12/2014 Vale et al.
2015/0005781 A1 1/2015 Lund-Clausen et al.
2015/0005792 A1 1/2015 Ahn
2015/0018859 A1 1/2015 Quick
2015/0018860 A1 1/2015 Quick
2015/0018929 A1 1/2015 Martin et al.
2015/0025555 A1 1/2015 Sos
2015/0032144 A1 1/2015 Holloway
2015/0059908 A1 3/2015 Mollen
2015/0088190 A1 3/2015 Jensen
2015/0127035 A1 5/2015 Trapp et al.
2015/0133990 A1 5/2015 Davidson
2015/0150672 A1 6/2015 Ma
2015/0164523 A1 6/2015 Brady et al.
2015/0164666 A1 6/2015 Johnson et al.
2015/0173782 A1 6/2015 Garrison et al.
2015/0190155 A1 7/2015 Ulm, III
2015/0190156 A1 7/2015 Ulm, III
2015/0196380 A1 7/2015 Berrada et al.
2015/0196744 A1 7/2015 Aboytes
2015/0209058 A1 7/2015 Ferrera et al.
2015/0209165 A1 7/2015 Grandfield et al.
2015/0238207 A1 8/2015 Cox et al.
2015/0250578 A1 9/2015 Cook et al.
2015/0265299 A1 9/2015 Cooper et al.
2015/0305756 A1 10/2015 Rosenbluth
2015/0305859 A1 10/2015 Eller
2015/0352325 A1 12/2015 Quick
2015/0360001 A1 12/2015 Quick
2015/0374391 A1 12/2015 Quick
2016/0022293 A1 1/2016 Dubrul et al.
2016/0058540 A1 3/2016 Don Michael
2016/0074627 A1 3/2016 Cottone
2016/0106448 A1 4/2016 Brady et al.
2016/0106449 A1 4/2016 Brady et al.
2016/0113663 A1 4/2016 Brady et al.
2016/0113664 A1 4/2016 Brady et al.
2016/0113665 A1 4/2016 Brady et al.
2016/0113666 A1 4/2016 Quick
2016/0143721 A1 5/2016 Rosenbluth
2016/0151605 A1 6/2016 Welch et al.
2016/0206344 A1 7/2016 Bruzzi et al.
2016/0008014 A1 8/2016 Rosenbluth
2016/0220741 A1* 8/2016 Garrison A61B 17/22
2016/0228134 A1 8/2016 Martin et al.
2016/0262790 A1 9/2016 Rosenbluth et al.
2016/0287276 A1 10/2016 Cox et al.
2016/0367285 A1 12/2016 Sos
2017/0014560 A1 1/2017 Minskoff et al.
2017/0037548 A1 2/2017 Lee

(56) **References Cited**

U.S. PATENT DOCUMENTS

2017/0042571	A1	2/2017	Levi
2017/0049942	A1	2/2017	Conlan et al.
2017/0056032	A1	3/2017	Look et al.
2017/0058623	A1	3/2017	Jaffrey et al.
2017/0079672	A1	3/2017	Quick
2017/0086864	A1	3/2017	Greenhalgh et al.
2017/0100142	A1	4/2017	Look et al.
2017/0105743	A1	4/2017	Vale et al.
2017/0105745	A1	4/2017	Rosenbluth et al.
2017/0112514	A1	4/2017	Marchand et al.
2017/0112513	A1	7/2017	Marchand et al.
2017/0189041	A1	7/2017	Cox et al.
2017/0196576	A1	7/2017	Long et al.
2017/0233908	A1	8/2017	Kroczynski et al.
2017/0265878	A1	9/2017	Marchand et al.
2017/0303939	A1	10/2017	Greenhalgh et al.
2017/0303942	A1	10/2017	Greenhalgh et al.
2017/0303947	A1	10/2017	Greenhalgh et al.
2017/0303948	A1	10/2017	Wallace et al.
2017/0319221	A1	11/2017	Chu
2017/0325839	A1	11/2017	Rosenbluth et al.
2017/0348014	A1	12/2017	Wallace et al.
2018/0042624	A1	2/2018	Greenhalgh et al.
2018/0042626	A1	2/2018	Greenhalgh et al.
2018/0064453	A1	3/2018	Garrison et al.
2018/0064454	A1	3/2018	Losordo et al.
2018/0070968	A1	3/2018	Wallace et al.
2018/0092652	A1	4/2018	Marchand et al.
2018/0104404	A1	4/2018	Ngo-Chu
2018/0105963	A1	4/2018	Quick
2018/0125512	A1	5/2018	Nguyen et al.
2018/0193043	A1	7/2018	Marchand et al.
2018/0236205	A1	8/2018	Krautkremer et al.
2018/0256178	A1	9/2018	Cox et al.
2018/0296240	A1	10/2018	Rosenbluth et al.
2018/0344339	A1	12/2018	Cox et al.
2018/0361116	A1	12/2018	Quick et al.
2019/0000492	A1	1/2019	Casey et al.
2019/0046219	A1	2/2019	Marchand et al.
2019/0070401	A1	3/2019	Merritt et al.
2019/0117244	A1	4/2019	Wallace et al.
2019/0133622	A1	5/2019	Wallace et al.
2019/0133623	A1	5/2019	Wallace et al.
2019/0133624	A1	5/2019	Wallace et al.
2019/0133625	A1	5/2019	Wallace et al.
2019/0133626	A1	5/2019	Wallace et al.
2019/0133627	A1	5/2019	Wallace et al.
2019/0150959	A1	5/2019	Cox et al.
2019/0231373	A1	8/2019	Quick
2019/0321071	A1	10/2019	Marchand et al.
2019/0336148	A1	11/2019	Greenhalgh et al.
2020/0046368	A1	2/2020	Merritt et al.
2020/0113412	A1	4/2020	Jensen
2021/0113224	A1	4/2021	Dinh
2021/0186541	A1	6/2021	Thress
2021/0290925	A1	9/2021	Merritt et al.
2021/0330344	A1	10/2021	Rosenbluth et al.
2021/0378694	A1	12/2021	Thress et al.
2022/0000505	A1	1/2022	Hauser
2022/0000506	A1	1/2022	Hauser
2022/0000507	A1	1/2022	Hauser
2022/0015798	A1	1/2022	Marchand et al.
2022/0022898	A1	1/2022	Cox et al.
2022/0039815	A1	2/2022	Thress et al.
2022/0125451	A1	4/2022	Hauser
2022/0160381	A1	5/2022	Hauser
2022/0160382	A1	5/2022	Hauser
2022/0160383	A1	5/2022	Hauser
2022/0211400	A1	7/2022	Cox et al.
2022/0211992	A1	7/2022	Merritt et al.
2022/0240959	A1	8/2022	Quick

FOREIGN PATENT DOCUMENTS

CN	103764049		4/2014
CN	103932756		7/2014
CN	104068910		10/2014
CN	108348319		7/2018
CN	110652645		1/2020
CN	111281482		6/2020
DE	102017004383		7/2018
EP	1254634		11/2002
EP	1867290		2/2013
GB	1588072		4/1981
GB	2498349		7/2013
JP	H6190049		7/1994
JP	H07323090	A	12/1995
JP	2001522631		5/1999
JP	2004097807		4/2004
JP	2005-095242		6/2005
JP	2005230132		9/2005
JP	2005323702		11/2005
JP	2006094876		4/2006
JP	2011526820		1/2010
WO	WO1997017889		5/1997
WO	WO9833443		8/1998
WO	WO9838920		9/1998
WO	WO9839053		9/1998
WO	WO9851237		11/1998
WO	WO1999044542		9/1999
WO	WO0032118		6/2000
WO	WO2000053120		9/2000
WO	WO0202162		1/2002
WO	WO03015840		2/2003
WO	WO2004018916		3/2004
WO	WO2004093696		11/2004
WO	WO2005046736		5/2005
WO	WO2006110186		10/2006
WO	WO2007092820		8/2007
WO	WO2009082513		7/2009
WO	WO2009086482		7/2009
WO	WO2009155571		12/2009
WO	WO2010002549		1/2010
WO	WO2010010545		1/2010
WO	WO2010023671		3/2010
WO	WO2010049121		5/2010
WO	WO2010102307		9/2010
WO	WO2011032712		3/2011
WO	WO2011054531		5/2011
WO	WO2011073176		6/2011
WO	WO2012009675		1/2012
WO	WO2012011097		1/2012
WO	WO2012049652		4/2012
WO	WO2012065748		5/2012
WO	WO2012120490		9/2012
WO	WO2012162437		11/2012
WO	WO2014047650		3/2014
WO	WO2014081892		5/2014
WO	WO2015006782		1/2015
WO	WO2015061365		4/2015
WO	WO2015121424		8/2015
WO	WO2015189354		12/2015
WO	WO2015191646		12/2015
WO	WO2017024258		2/2017
WO	WO2017058280		4/2017
WO	WO2017070702		4/2017
WO	WO2017106877		6/2017
WO	WO2017189535		11/2017
WO	WO2017189550		11/2017
WO	WO2017189591		11/2017
WO	WO2017189615		11/2017
WO	WO2017210487		12/2017
WO	WO2018049317		3/2018
WO	WO2018080590		5/2018
WO	WO2018148174		8/2018
WO	WO2019010318		1/2019
WO	WO2019050765		3/2019
WO	WO2019075444		4/2019
WO	WO2019094456		5/2019
WO	WO2019222117		11/2019
WO	WO2019246240		12/2019

(56) **References Cited**

FOREIGN PATENT DOCUMENTS

WO	WO2020036809	2/2020
WO	WO2021067134	4/2021
WO	WO2021076954	4/2021
WO	WO2021127202	6/2021
WO	WO2021248042	12/2021
WO	WO2022032173	2/2022
WO	WO2022103848	5/2022
WO	WO2022109021	5/2022
WO	WO2022109034	5/2022

OTHER PUBLICATIONS

Gibbs, et al., "Temporary Stent as a bail-out device during percutaneous transluminal coronary angioplasty: preliminary clinical experience," British Heart Journal, 1994, 71:372-377, Oct. 12, 1993, 6 pgs.
Gupta, S. et al., "Acute Pulmonary Embolism Advances in Treatment", JAPI, Association of Physicians India, Mar. 2008, vol. 56, 185-191.
International Search Report and Written Opinion for International App. No. PCT/US13/61470, dated Jan. 17, 2014, 7 pages.
International Search Report and Written Opinion for International App. No. PCT/US2014/046567, dated Nov. 3, 2014, 13 pages.
International Search Report and Written Opinion for International App. No. PCT/US2014/061645, dated Jan. 23, 2015, 15 pages.
International Search Report for International App. No. PCT/US13/71101, dated Mar. 31, 2014, 4 pages.
Konstantinides, S. et al., "Pulmonary embolism hotline 2012—Recent and expected trials", Thrombosis and Haemostasis, Jan. 9, 2013:33; 43-50.
Konstantinides, S. et al., "Pulmonary embolism: risk assessment and management", European Society of Cardiology; European Heart Journal, Sep. 7, 2012:33, 3014-3022.
Kucher, N. et al., "Percutaneous Catheter Thrombectomy Device for Acute Pulmonary Embolism: In Vitro and in Vivo Testing", Circulation, Sep. 2005:112:e28-e32.
Kucher, N., "Catheter Interventions in Massive Pulmonary Embolism", Cardiology Rounds, Mar. 2006 vol. 10, Issue 3, 6 pages.
Kucher, N. et al., "Management of Massive Pulmonary Embolism", Radiology, Sep. 2005:236:3 852-858.
Kucher, N. et al., "Randomized, Controlled Trial of Ultrasound-Assisted Catheter-Directed Thrombolysis for Acute Intermediate-Risk Pulmonary Embolism." Circulation, 2014, 129, pp. 9 pages.
Kuo, W. et al., "Catheter-directed Therapy for the Treatment of Massive Pulmonary Embolism: Systematic Review and Meta-analysis of Modern Techniques", Journal of Vascular and Interventional Radiology, Nov. 2009:20:1431-1440.
Kuo, W. et al., "Catheter-Directed Embolectomy, Fragmentation, and Thrombolysis for the Treatment of Massive Pulmonary Embolism After Failure of Systemic Thrombolysis", American College of CHEST Physicians 2008: 134:250-254.
Kuo, W. Md, "Endovascular Therapy for Acute Pulmonary Embolism", Continuing Medical Education Society of Interventional Radiology ("CME"); Journal of Vascular and Interventional Radiology, Feb. 2012: 23:167-179.
Lee, L. et al, "Massive pulmonary embolism: review of management strategies with a focus on catheter-based techniques", Expert Rev. Cardiovasc. Ther. 8(6), 863-873 (2010).
Liu, S. et al, "Massive Pulmonary Embolism: Treatment with the Rotarex Thrombectomy System", Cardiovascular Interventional Radiology; 2011: 34:106-113.
Muller-Hulsbeck, S. et al. "Mechanical Thrombectomy of Major and Massive Pulmonary Embolism with Use of the Amplatz Thrombectomy Device", Investigative Radiology, Jun. 2001:36:6:317-322.
Reekers, J. et al., "Mechanical Thrombectomy for Early Treatment of Massive Pulmonary Embolism", CardioVascular and Interventional Radiology, 2003: 26:246-250.
Schmitz-Rode et al., "New Mesh Basket for Percutaneous Removal of Wall-Adherent Thrombi in Dialysis Shunts," Cardiovasc Intervent Radiol 16:7-10 1993 4 pgs.
Schmitz-Rode et al., "Temporary Pulmonary Stent Placement as Emergency Treatment of Pulmonary Embolism," Journal of the American College of Cardiology, vol. 48, No. 4, 2006 (5 pgs.).
Schmitz-Rode, T. et al., "Massive Pulmonary Embolism: Percutaneous Emergency Treatment by Pigtail Rotation Catheter", JACC Journal of the American College of Cardiology, Aug. 2000:36:2:375-380.
Spiotta, A et al., "Evolution of thrombectomy approaches and devices for acute stroke: a technical review." J NeuroIntervent Surg 2015, 7, pp. 7 pages.
Svilaas, T. et al., "Thrombus Aspiration During Primary Percutaneous Coronary Intervention." The New England Journal of Medicine, 2008, vol. 358, No. 6, 11 pages.
Tapson, V., "Acute Pulmonary Embolism", The New England Journal of Medicine, Mar. 6, 2008:358:2037-52.
The Penumbra Pivotal Stroke Trial Investigators, "The Penumbra Pivotal Stroke Trial: Safety and Effectiveness of a New Generation of Mechanical Devices for Clot Removal in Intracranial Large Vessel Occlusive Disease." Stroke, 2009, 40: p. 9 pages.
Truong et al., "Mechanical Thrombectomy of Iliocaval Thrombosis Using a Protective Expandable Sheath," Cardiovasc Intervent Radiol27-254-258, 2004, 5 pgs.
Turk et al., "Adapt Fast study: a direct aspiration first pass technique for acute stroke thrombectomy." J NeuroIntervent Surg, vol. 6, 2014, 5 pages.
Uflacker, R., "Interventional Therapy for Pulmonary Embolism", Journal of Vascular and Interventional Radiology, Feb. 2001: 12:147-164.
Verma, R., Md et al. "Evaluation of a Newly Developed Percutaneous Thrombectomy Basket Device in Sheep With Central Pulmonary Embolisms", *Investigative Radiology*, Oct. 2006, 41, 729-734.
International Search Report and Written Opinion for International App. No. PCT/US2015/034987 filed Jun. 9, 2015, Applicant: Inceptus Medical, LLC, dated Sep. 17, 2015, 12 pages.
English translation of Japanese Office Action received for JP Application No. 2016-564210, Applicant: Inceptus Medical, LLC, dated Sep. 4, 2017, 4 pages.
Australian Exam Report received for AU Application No. 2015274704, Applicant: Inceptus Medical, LLC, dated Sep. 7, 2017, 3 pages.
European Search Report received for EP Application No. 15805810.7, Applicant: Inceptus Medical, LLC, dated Sep. 4, 2017, 6 pages.
International Search Report and Written Opinion for International App. No. PCT/US2016/067628 filed Dec. 19, 2016, Applicant: Inari Medical, Inc., dated Apr. 10, 2017, 11 pages.
Goldhaber, S. et al. "Percutaneous Mechanical Thrombectomy for Acute Pulmonary Embolism—A Double-Edged Sword," American College of CHEST Physicians, Aug. 2007, 132:2, 363-372.
Goldhaber, S., "Advanced treatment strategies for acute pulmonary embolism, including thrombolysis and embolectomy," Journal of Thrombosis and Haemostasis, 2009: 7 (Suppl. 1): 322-327.
International Search Report and Written Opinion for International App. No. PCT/US2017/029696, Date of Filing: Apr. 26, 2017, Applicant: Inari Medical, Inc., dated Sep. 15, 2017, 19 pages.
International Search Report and Written Opinion for International App. No. PCT/US2016/058536, Date of Filing: Oct. 24, 2016, Applicant: Inari Medical, Inc., dated Mar. 13, 2017, 14 pages.
European First Office Action received for EP Application No. 13838945.7, Applicant: Inari Medical, Inc., dated Oct. 26, 2018, 7 pages.
International Search Report and Written Opinion for International App. No. PCT/US2018/048786, Date of Filing: Aug. 30, 2018, Applicant: Inari Medical, Inc., dated Dec. 13, 2018, 12 pages.
International Search Report and Written Opinion for International App. No. PCT/US2018/055780, Date of Filing: Oct. 13, 2018, Applicant: Inceptus Medical LLC., dated Jan. 22, 2019, 8 pages.
European Search Report for European Application No. 16876941.2, Date of Filing: Dec. 19, 2016, Applicant: Inari Medical, Inc., dated Jul. 18, 2019, 7 pages.

(56) **References Cited**

OTHER PUBLICATIONS

Extended European Search Report for European Application No. 16858462.1, Date of Filing: Oct. 24, 2016, Applicant: Inari Medical, Inc., dated Jun. 3, 2019, 10 pages.
International Search Report and Written Opinion for International App. No. PCT/US2019/045794, Date of Filing: Aug. 8, 2019, Applicant: Inari Medical, Inc., dated Nov. 1, 2019, 17 pages.
Partial Supplementary European Search Report for European Application No. 17864818.4, Date of Filing: May 21, 2019, Applicant: Inari Medical, Inc., dated Apr. 24, 2020, 11 pages.
International Search Report and Written Opinion for International App. No. PCT/US2020/056067, Date of Filing: Oct. 16, 2020; Applicant: Inari Medical, Inc., dated Jan. 22, 2021, 8 pages.
Extended European Search Report for European Application No. 20191581.6, Applicant: Inari Medical, Inc., dated Mar. 31, 2021, 11 pages.
International Search Report and Written Opinion for International App. No. PCT/US2020/055645, Date of Filing: Dec. 17, 2020; Applicant: Inari Medical, Inc., dated Apr. 14, 2021, 12 pages.
Extended European Search Report for European Application No. 18853465.5, Applicant: Inari Medical, Inc., dated May 7, 2021, 2021, 7 pages.
Vorwerk, D. Md, et al., "Use of a Temporary Caval Filter to Assist Percutaneous Iliocaval Thrombectomy: Experimental Results." SCVIR, 1995, 4 pages.
Wikipedia; Embolectomy; retrieved from the internet: https://en.wikipedia.org/wiki/Embolectomy; 4 pgs.; retrieved/printed: Mar. 24, 2016.
O'Sullivan; Thrombolysis versus thrombectomy in acute deep vein thrombosis; Interventional Cardiology; 3(5); pp. 589-596; Oct. 2011.
Capture Vascular Systems; (company website); retrieved from the internet: http://www.capturevascular.com; 3 pgs.; retrieved/printed: Mar. 24, 2016.
Edwards Lifesciences; Fogarty® Occlusion Catheters (product brochure); retrieved from the internet: http://web.archive.org/web/20150228193218/http://www.edwards.com/products/vascular/atraumaticocclusion/pages/occlusioncatheter.aspx; © 2011; 2 pgs.; retrieved/printed: Mar. 24, 2011.
Boston Scientific; Fetch(TM) 2 Aspiration Catheter (product information);retrieved from the internet: http://www.bostonscientific.com/en-US/products/thrombectomy-systems/fetch2-aspiration-catheter.html; 2 pgs.; retrieved/printed: Mar. 24, 2016.
Penumbra, Inc.; Indigo® System (product information); retrieved from the internet: http://www.penumbrainc.com/peripherallpercutaneous-thromboembolectomy/indigo-system; 7 pgs.; retrieved/printed: Mar. 24, 2016.
YouTube; Merci Retrieval System X Series Animation; uploaded Mar. 16, 2009 (product information); posted on May 7, 2009 by SSMDePAUL, time 1:09, retrieved from the internet: https://www.youtube.com/watch?v=MGX7deuFkhc; 3 pgs.; retrieved/printed: Mar. 24, 2016.
Covidien; Solitaire(TM) AS Neurovascular Remodeling Device (product information); retrieved from the internet: http://www.ev3.net/neuro/intl/remodeling-devices/solitaire-ab. htm; © 2015; 2 pgs.; retrieved/printed: Mar. 24, 2016.
International Search Report and Written Opinion for International App. No. PCT/US21/35965, Date of Filing: Jun. 4, 2021, Applicant: Inari Medical, Inc., dated Sep. 28, 2021, 12 pages.
International Search Report and Written Opinion for International App. No. PCT/US21/45072 Date of Filing: Aug. 6, 2021, Applicant: Inari Medical, Inc., dated Jan. 20, 2022, 10 pages.
International Search Report and Written Opinion for International App. No. PCT/US21/58793; Date of Filing: Nov. 10, 2021, Applicant: Inari Medical, Inc., dated Mar. 16, 2022, 13 pages.
International Search Report and Written Opinion for International App. No. PCT/US21/59718; Date of Filing: Nov. 17, 2021, Applicant: Inari Medical, Inc., dated Mar. 22, 2022, 13 pages.
International Search Report and Written Opinion for International App. No. PCT/US21/59735; Date of Filing: Nov. 17, 2021, Applicant: Inari Medical, Inc., dated Mar. 22, 2022, 11 pages.

* cited by examiner

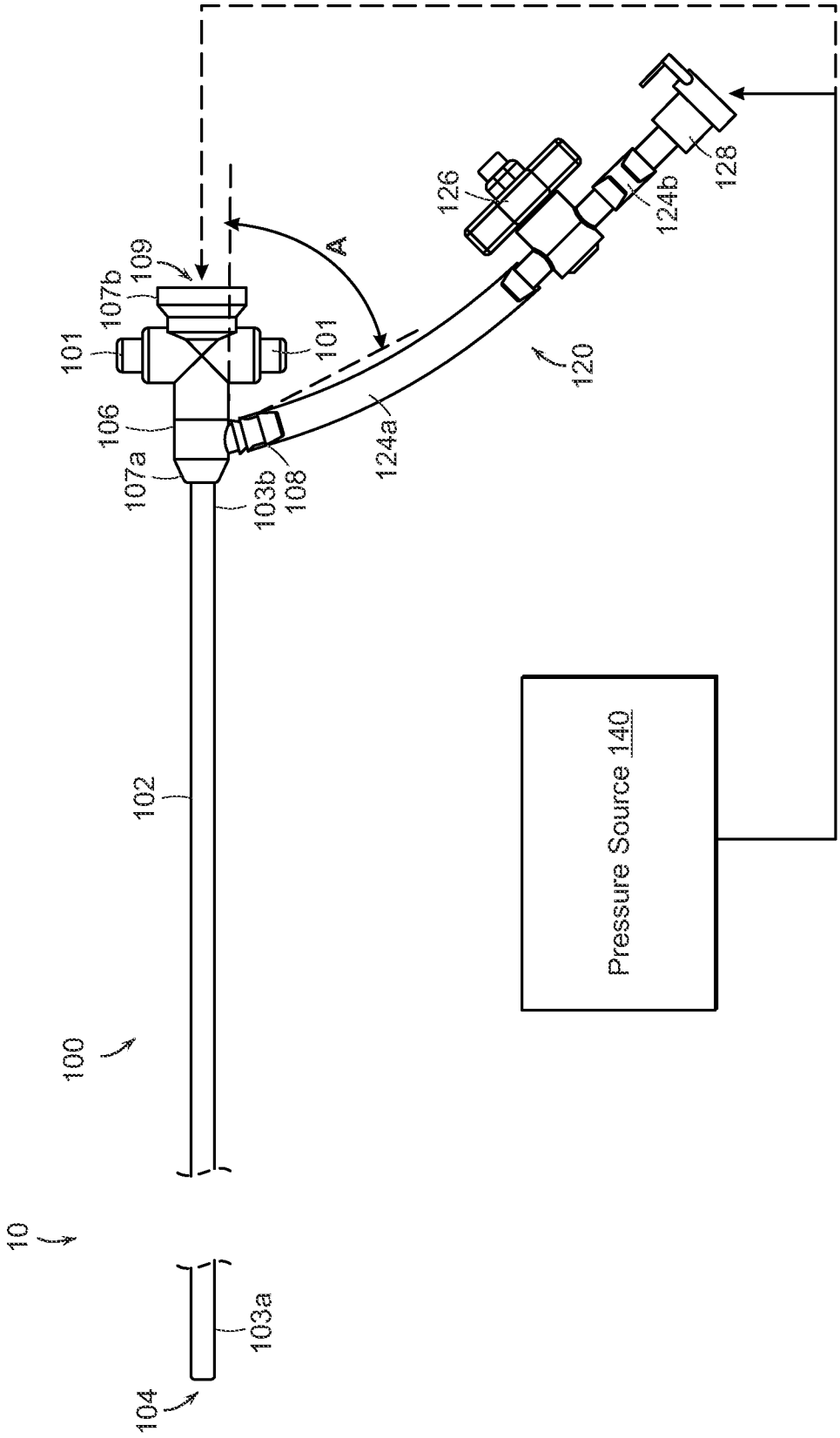

109
107b
101
101
106
107a
103b
108
124a
120
126
124b
128
A
102
100
10
103a
104
Pressure Source 140

FIG. 1

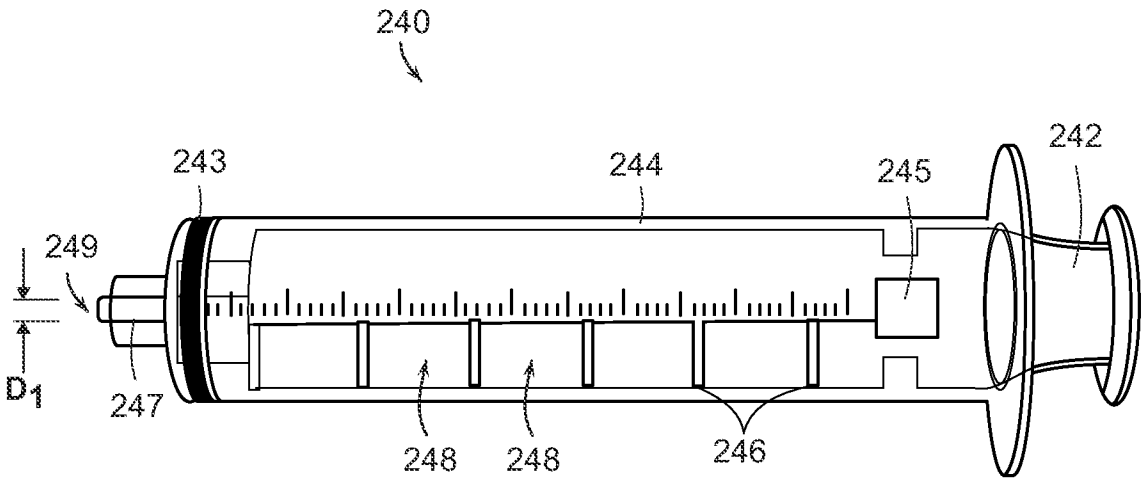
240
243
244
245
242
249
D_1
247
248
248
246

FIG. 2

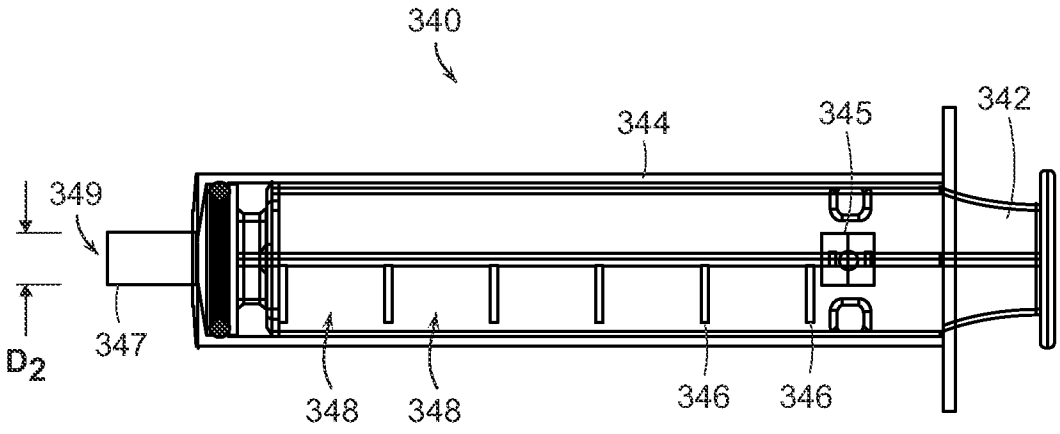
340
344
345
342
349
D_2
347
348
348
346
346

FIG. 3A

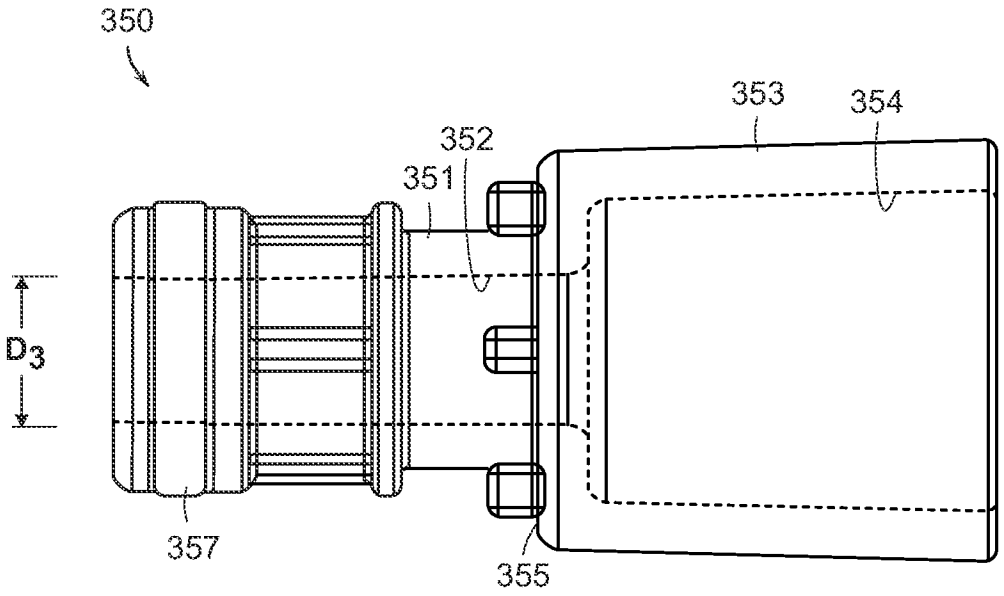

FIG. 3B

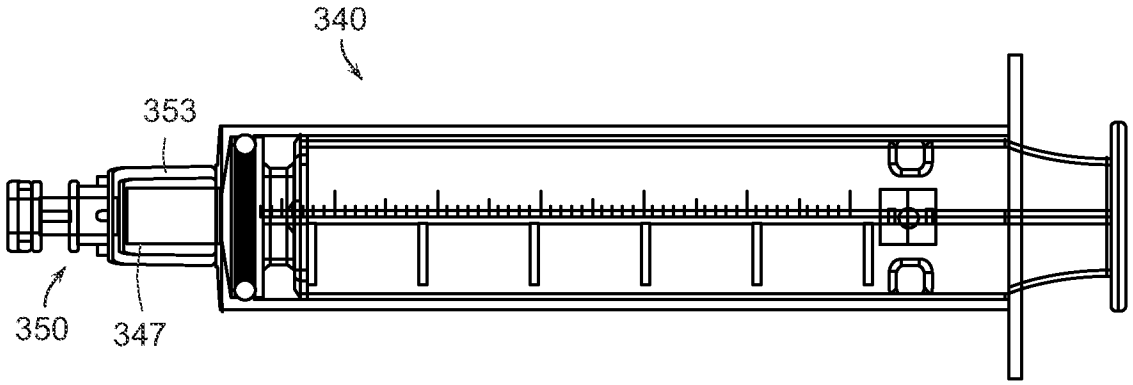

FIG. 3C

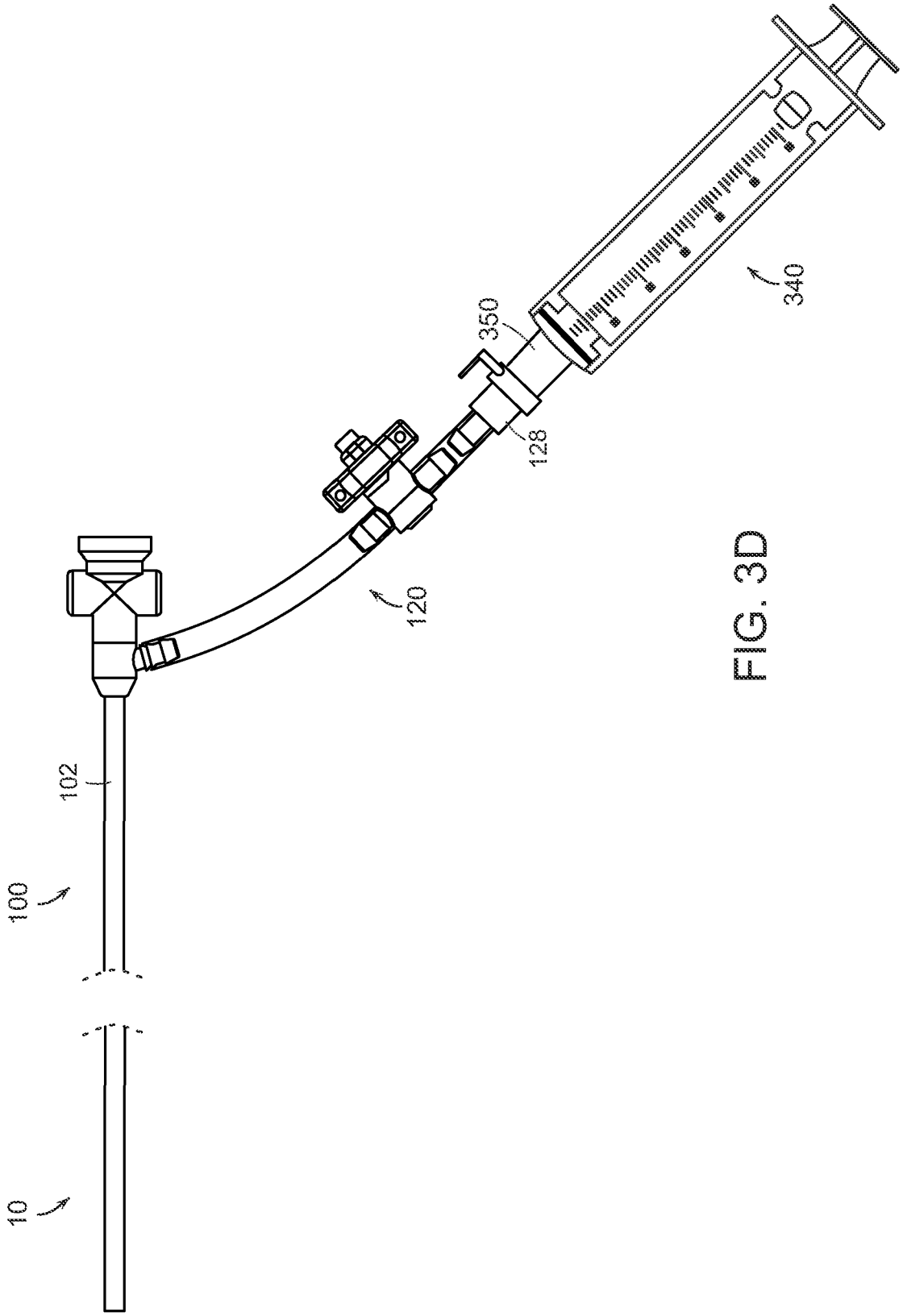

FIG. 3D

FIG. 4A

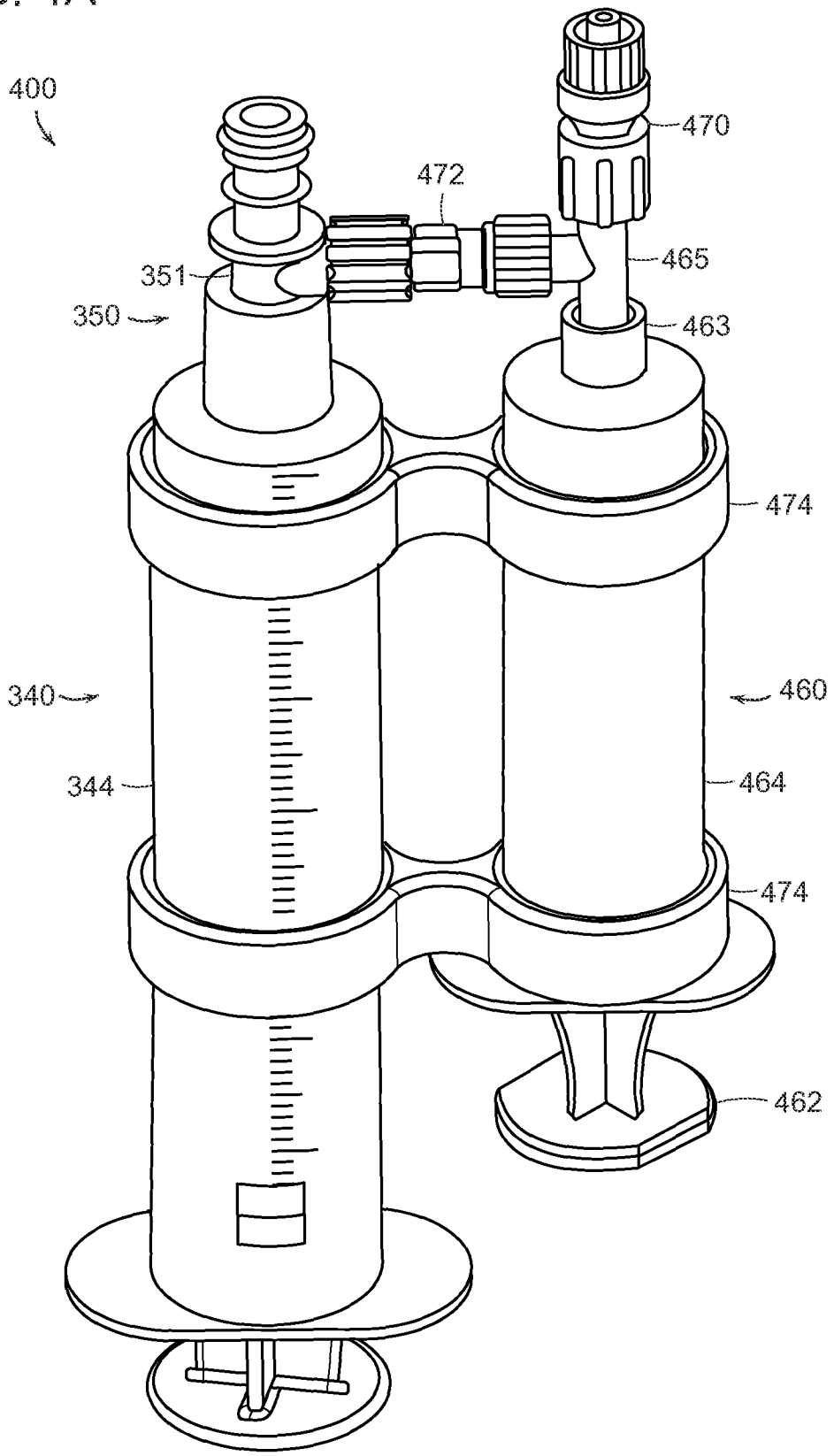

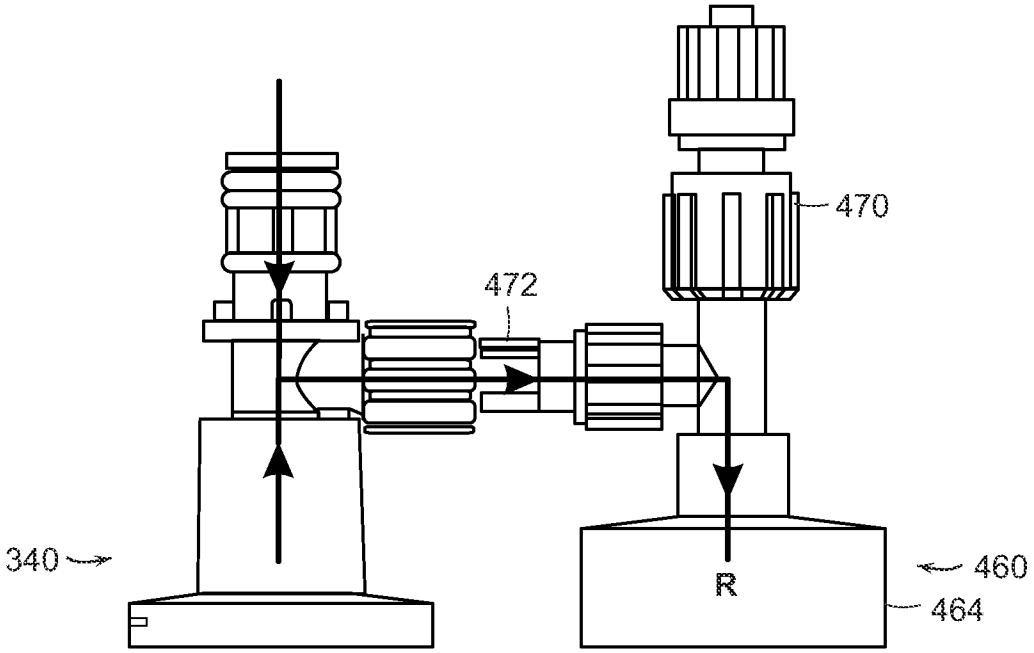

FIG. 4B

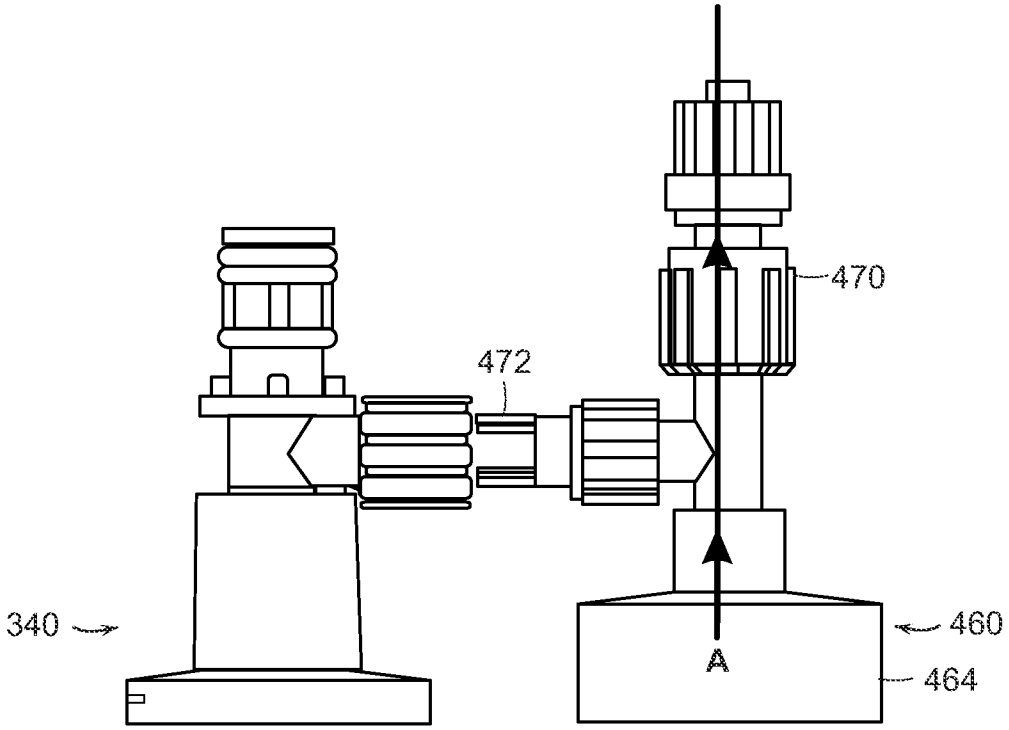

FIG. 4C

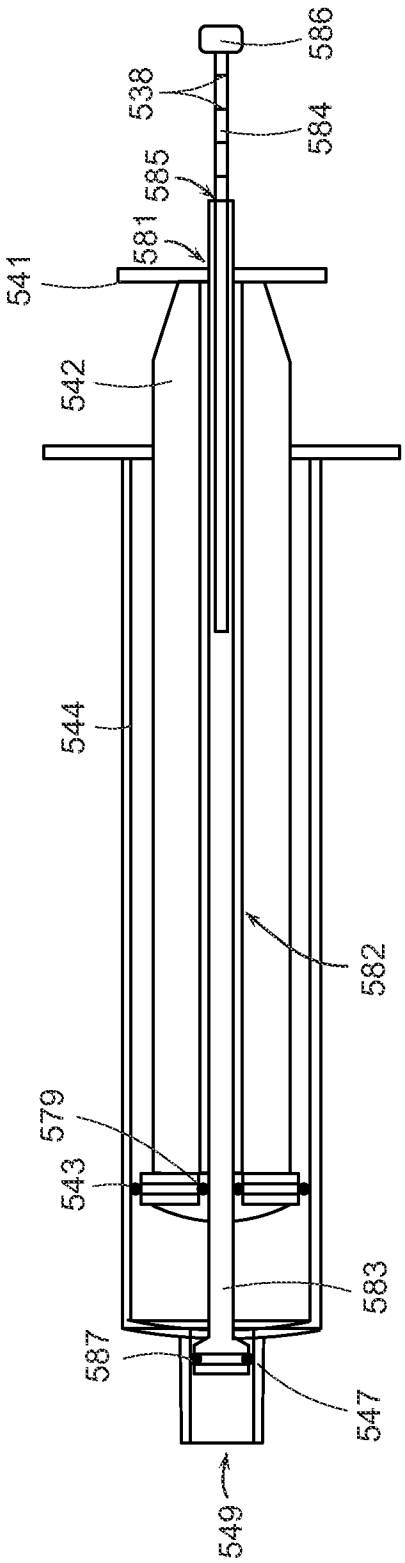

FIG. 5

FIG. 6

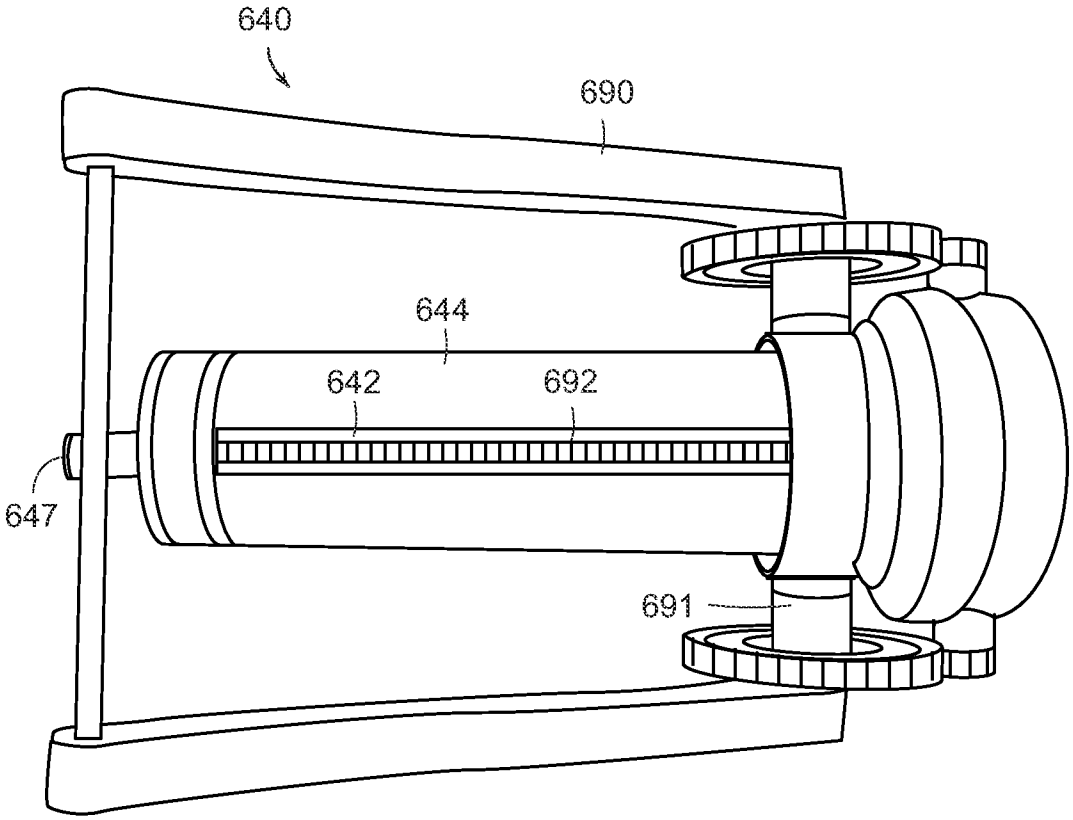

FIG. 7

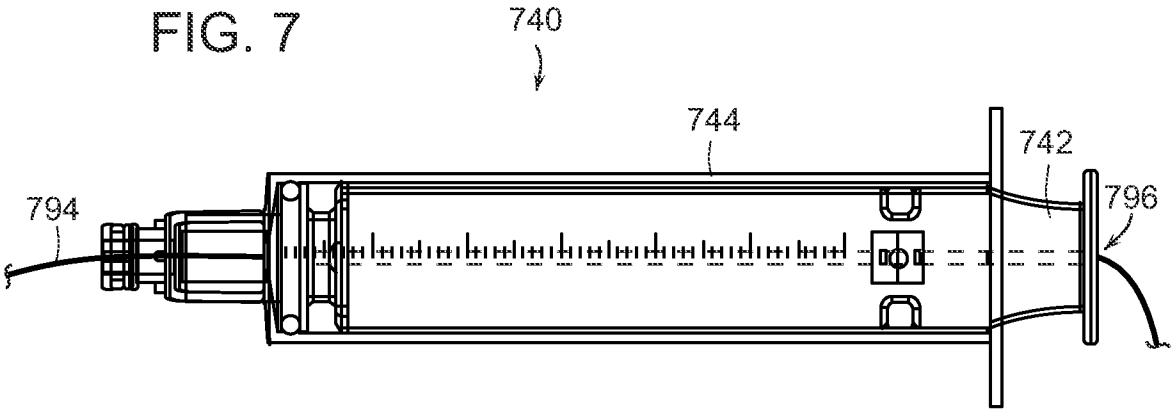

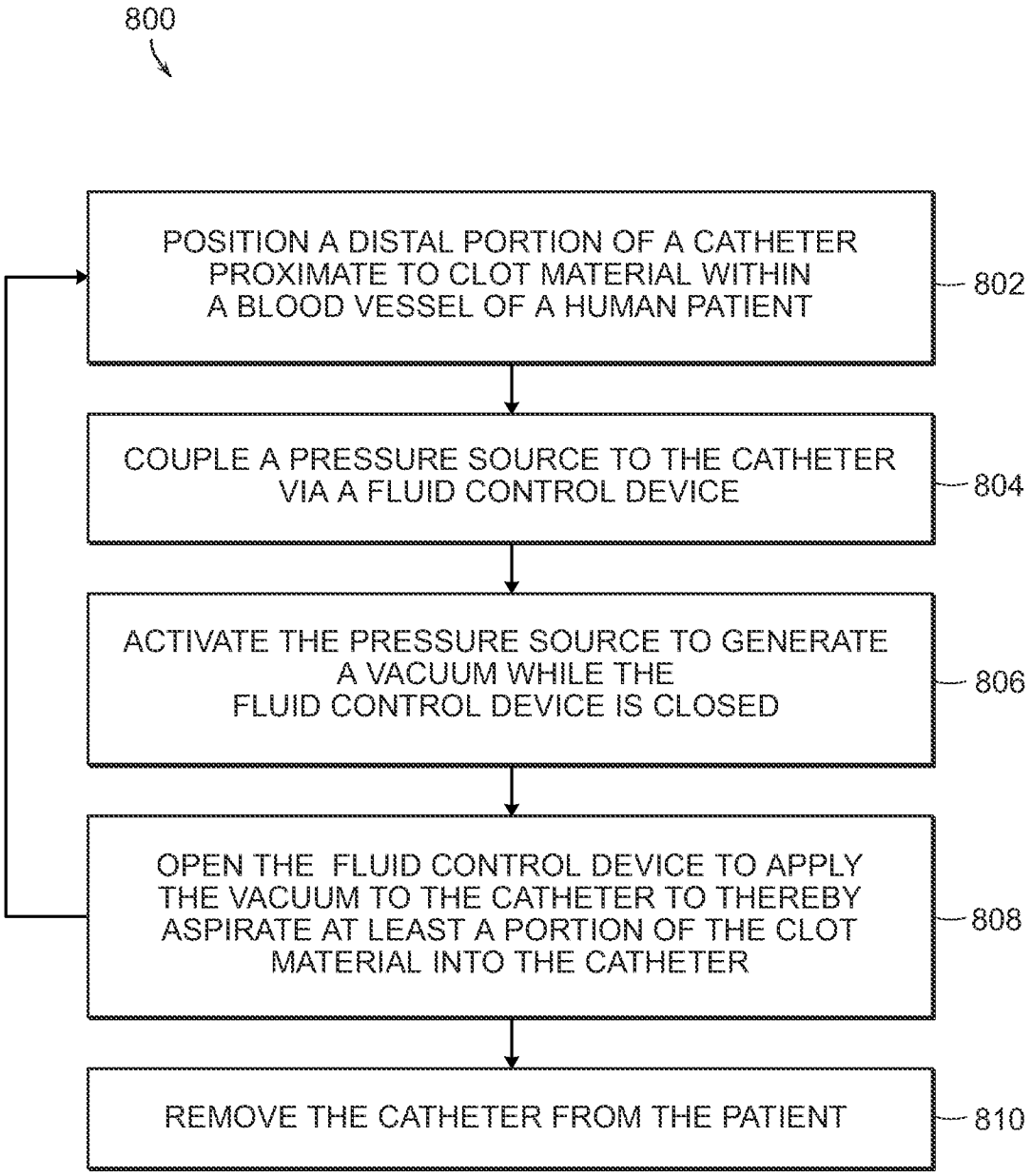
800
POSITION A DISTAL PORTION OF A CATHETER PROXIMATE TO CLOT MATERIAL WITHIN A BLOOD VESSEL OF A HUMAN PATIENT
802
COUPLE A PRESSURE SOURCE TO THE CATHETER VIA A FLUID CONTROL DEVICE
804
ACTIVATE THE PRESSURE SOURCE TO GENERATE A VACUUM WHILE THE FLUID CONTROL DEVICE IS CLOSED
806
OPEN THE FLUID CONTROL DEVICE TO APPLY THE VACUUM TO THE CATHETER TO THEREBY ASPIRATE AT LEAST A PORTION OF THE CLOT MATERIAL INTO THE CATHETER
808
REMOVE THE CATHETER FROM THE PATIENT
810

FIG. 8

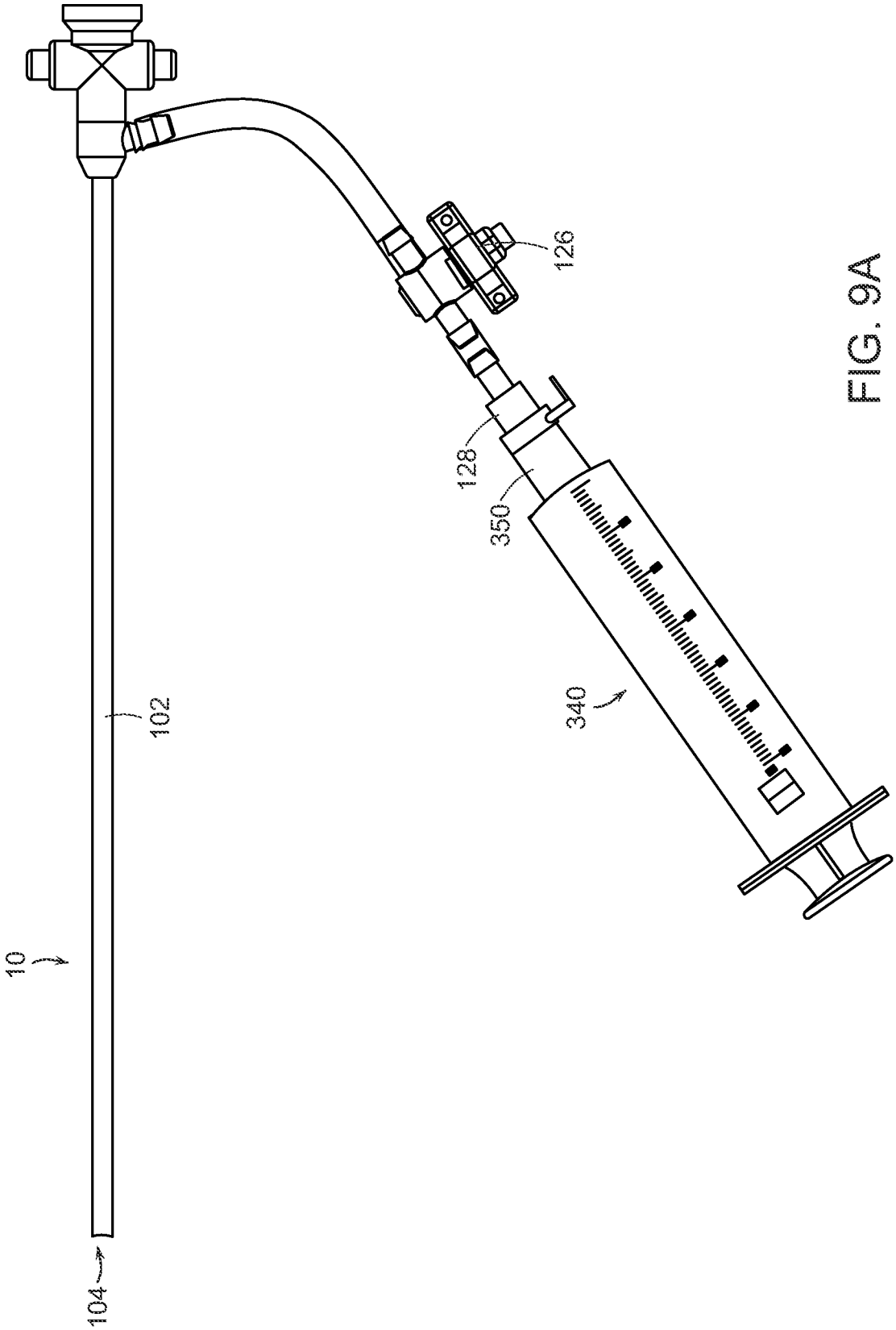

FIG. 9A

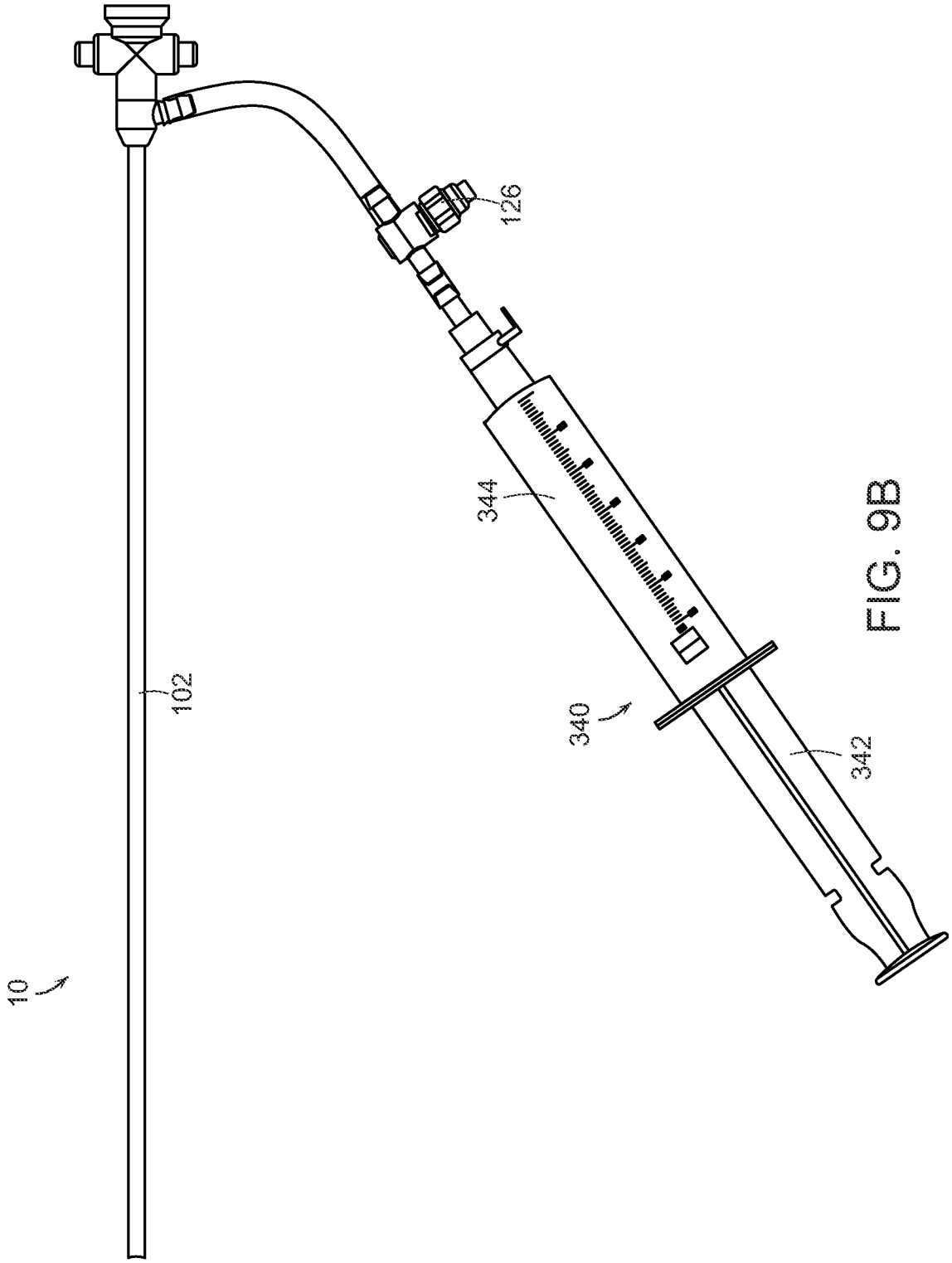

FIG. 9B

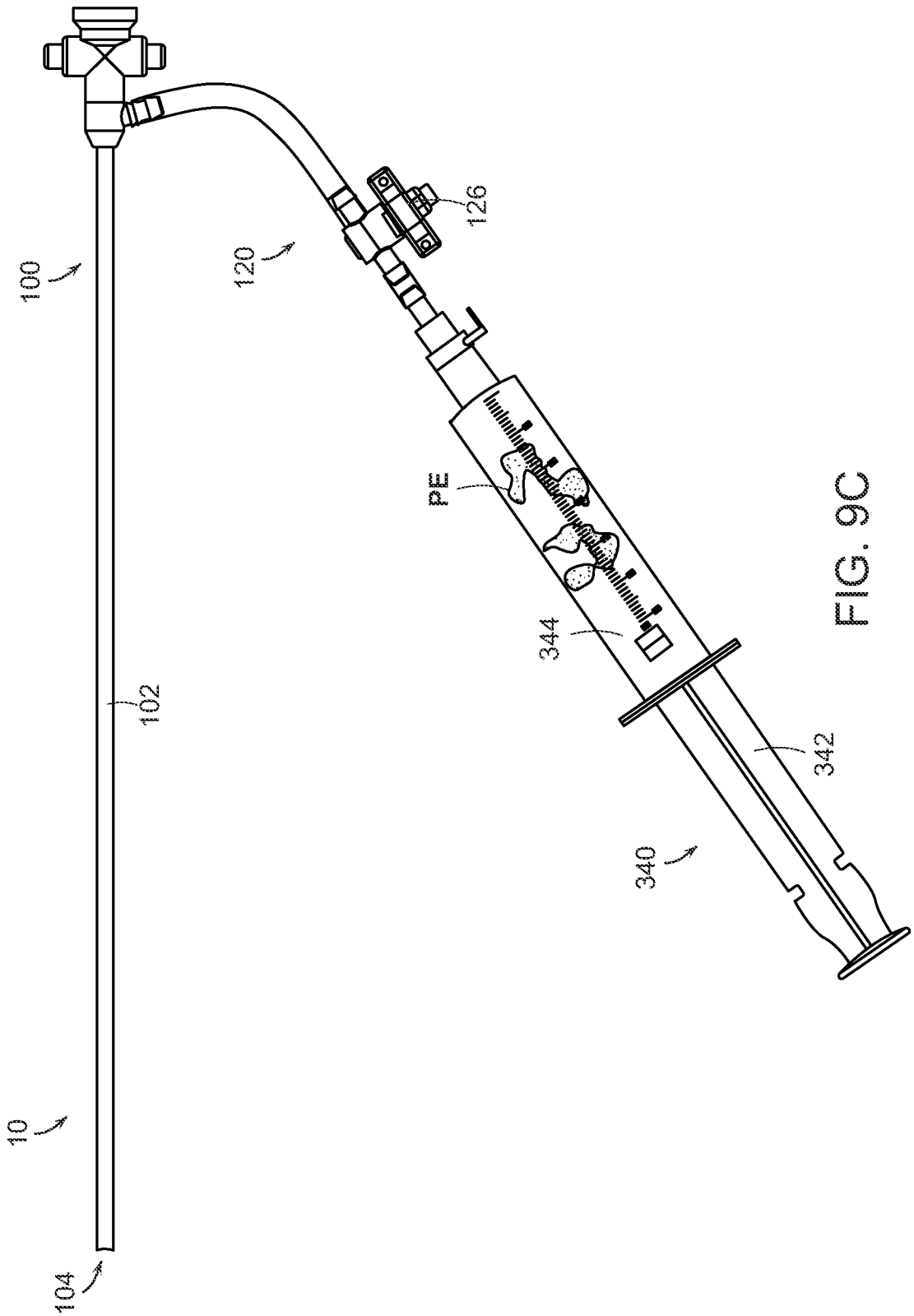

FIG. 9C

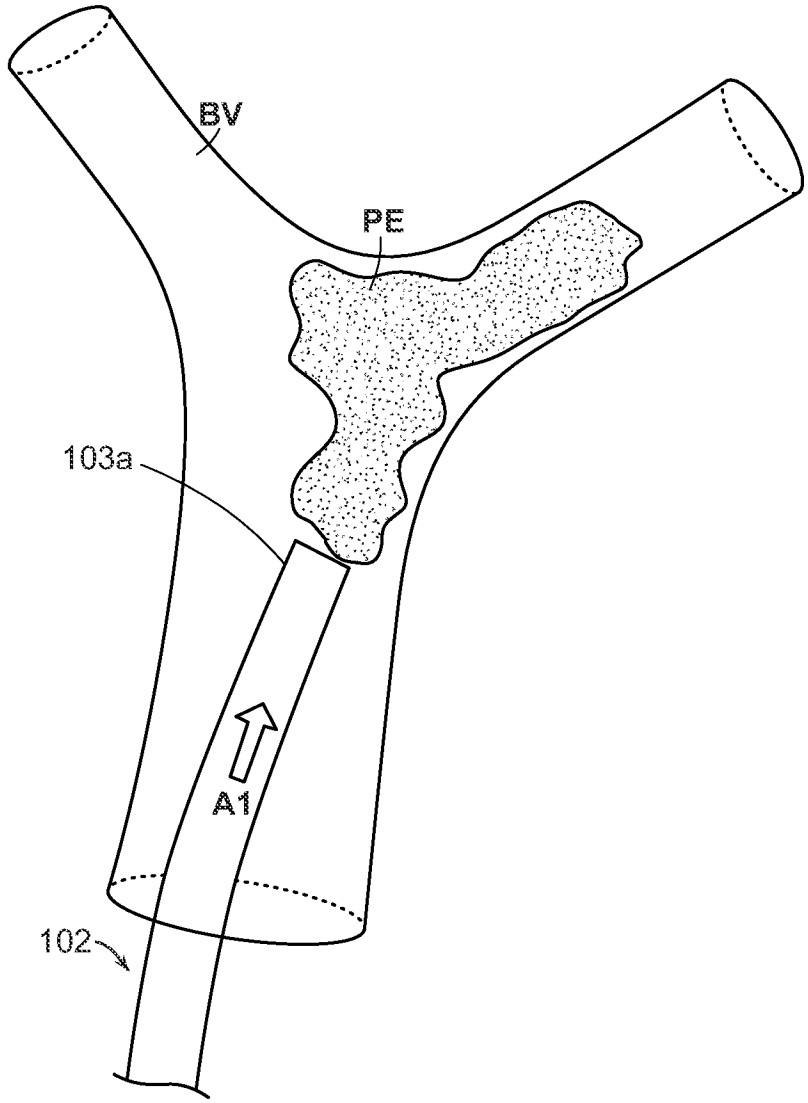

FIG. 10A

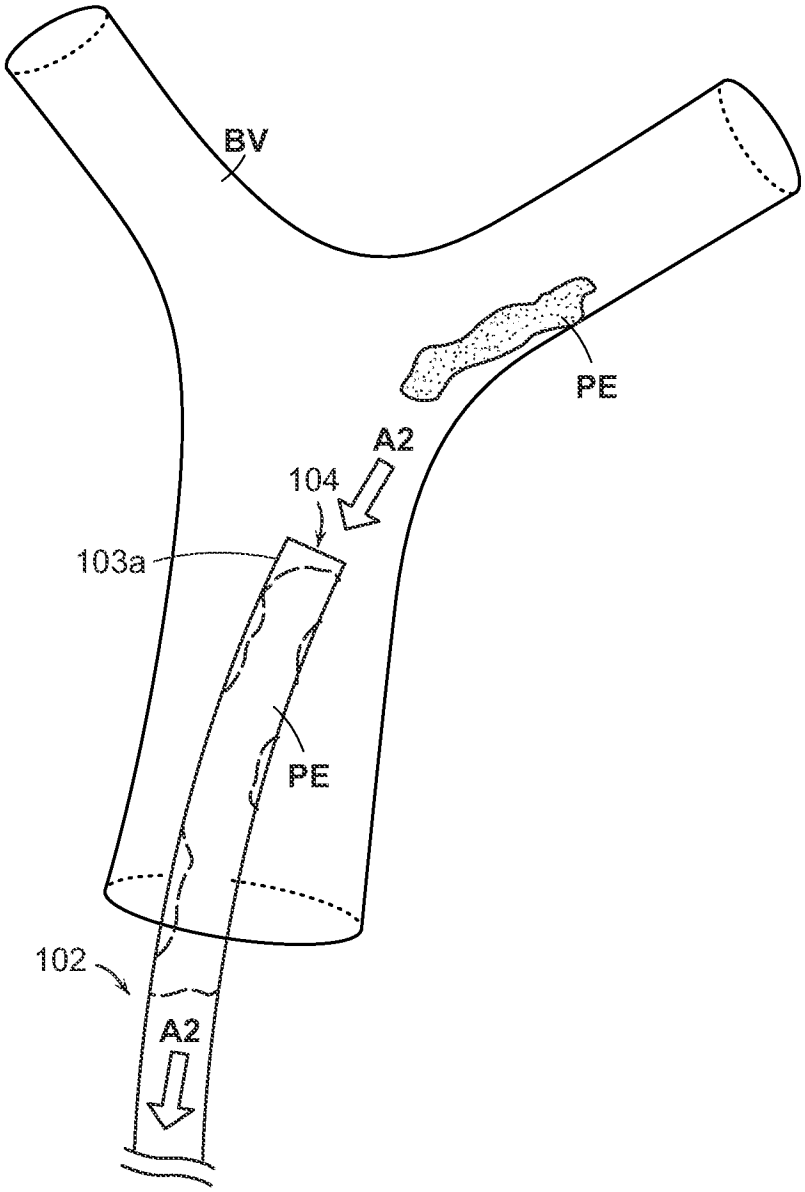

FIG. 10B

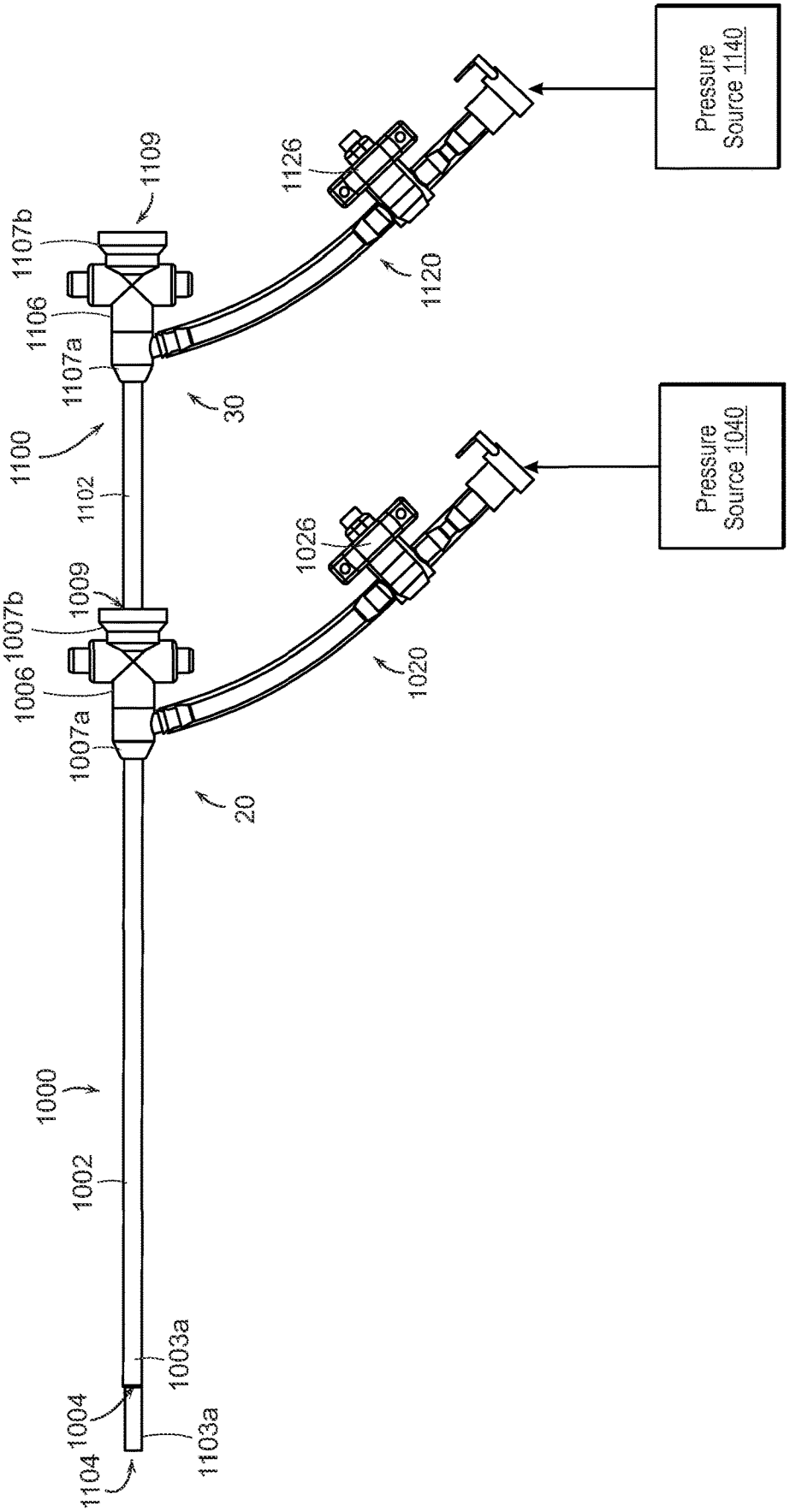
Pressure Source 1140
Pressure Source 1040
1109
1126
1107b
1120
1106
1107a
30
1100
1102
1026
1009
1007b
1020
1006
1007a
20
1000
1002
1003a
1004
1103a
1104

FIG. 11

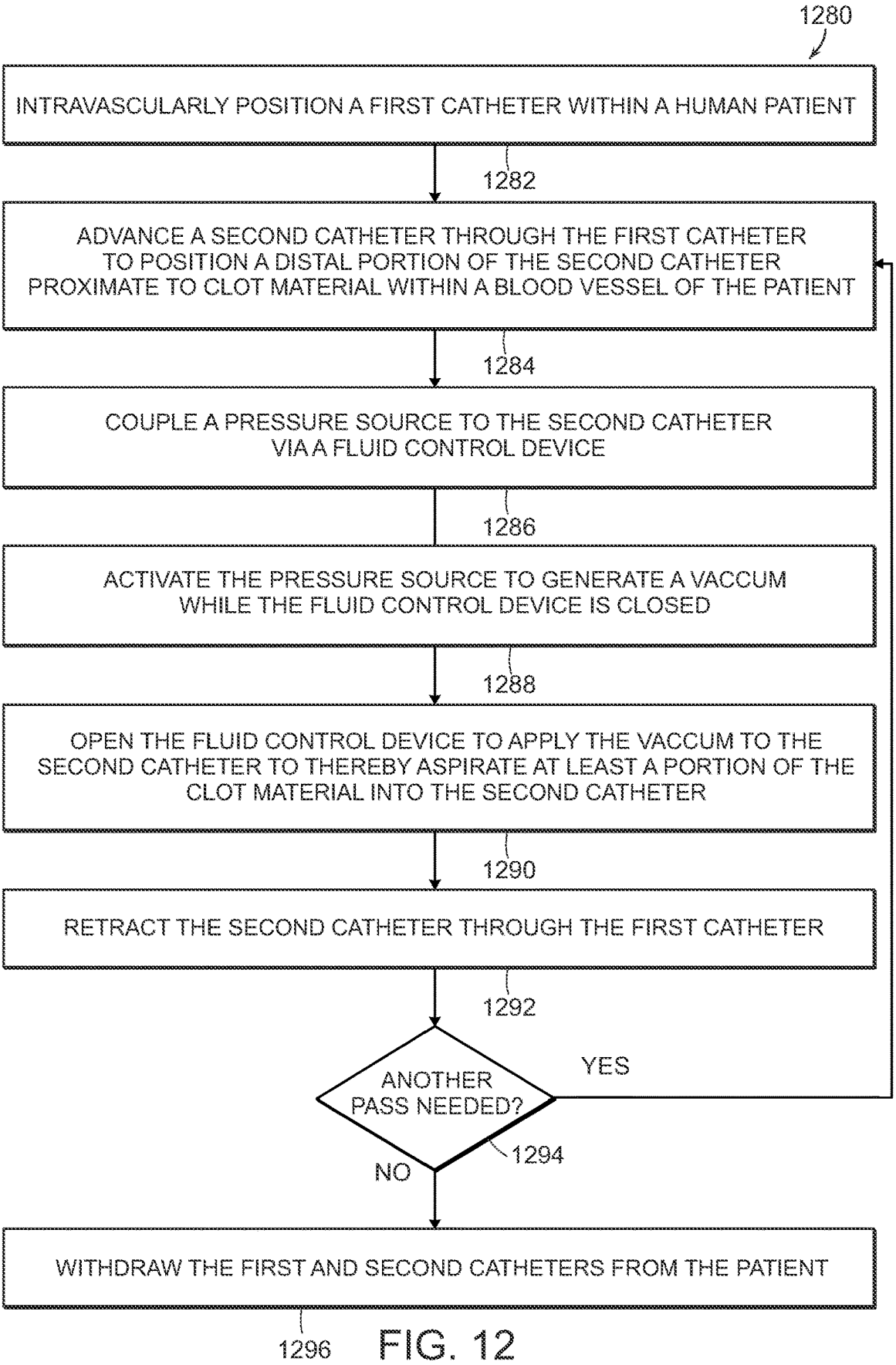
1280
INTRAVASCULARLY POSITION A FIRST CATHETER WITHIN A HUMAN PATIENT
1282
ADVANCE A SECOND CATHETER THROUGH THE FIRST CATHETER TO POSITION A DISTAL PORTION OF THE SECOND CATHETER PROXIMATE TO CLOT MATERIAL WITHIN A BLOOD VESSEL OF THE PATIENT
1284
COUPLE A PRESSURE SOURCE TO THE SECOND CATHETER VIA A FLUID CONTROL DEVICE
1286
ACTIVATE THE PRESSURE SOURCE TO GENERATE A VACCUM WHILE THE FLUID CONTROL DEVICE IS CLOSED
1288
OPEN THE FLUID CONTROL DEVICE TO APPLY THE VACCUM TO THE SECOND CATHETER TO THEREBY ASPIRATE AT LEAST A PORTION OF THE CLOT MATERIAL INTO THE SECOND CATHETER
1290
RETRACT THE SECOND CATHETER THROUGH THE FIRST CATHETER
1292
ANOTHER PASS NEEDED?
YES
1294
NO
WITHDRAW THE FIRST AND SECOND CATHETERS FROM THE PATIENT
1296

FIG. 12

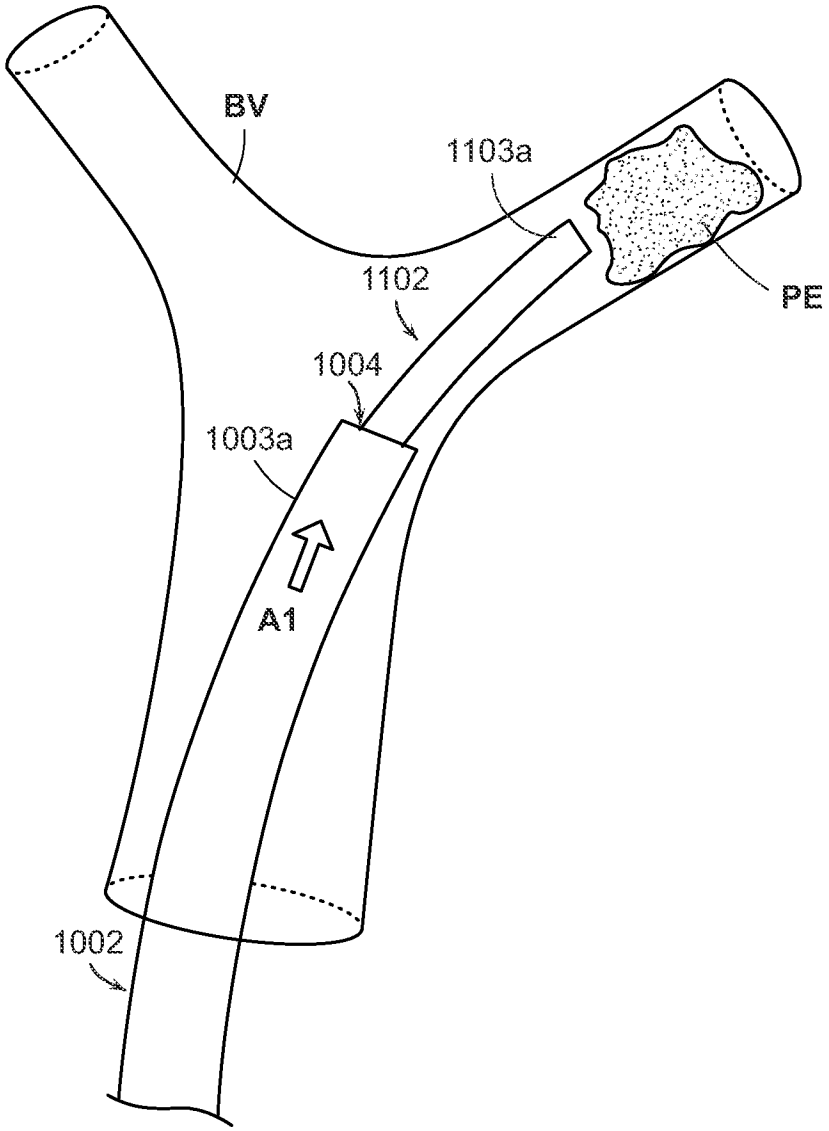

FIG. 13A

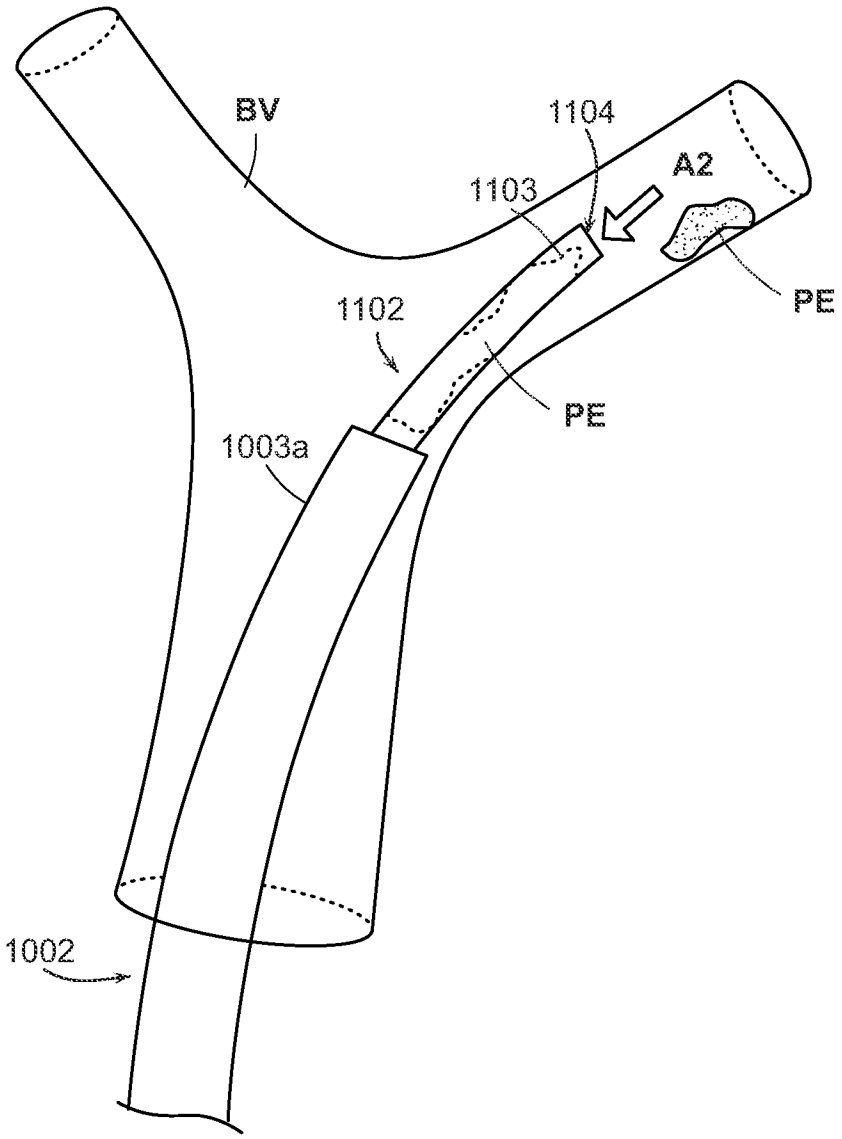

FIG. 13B

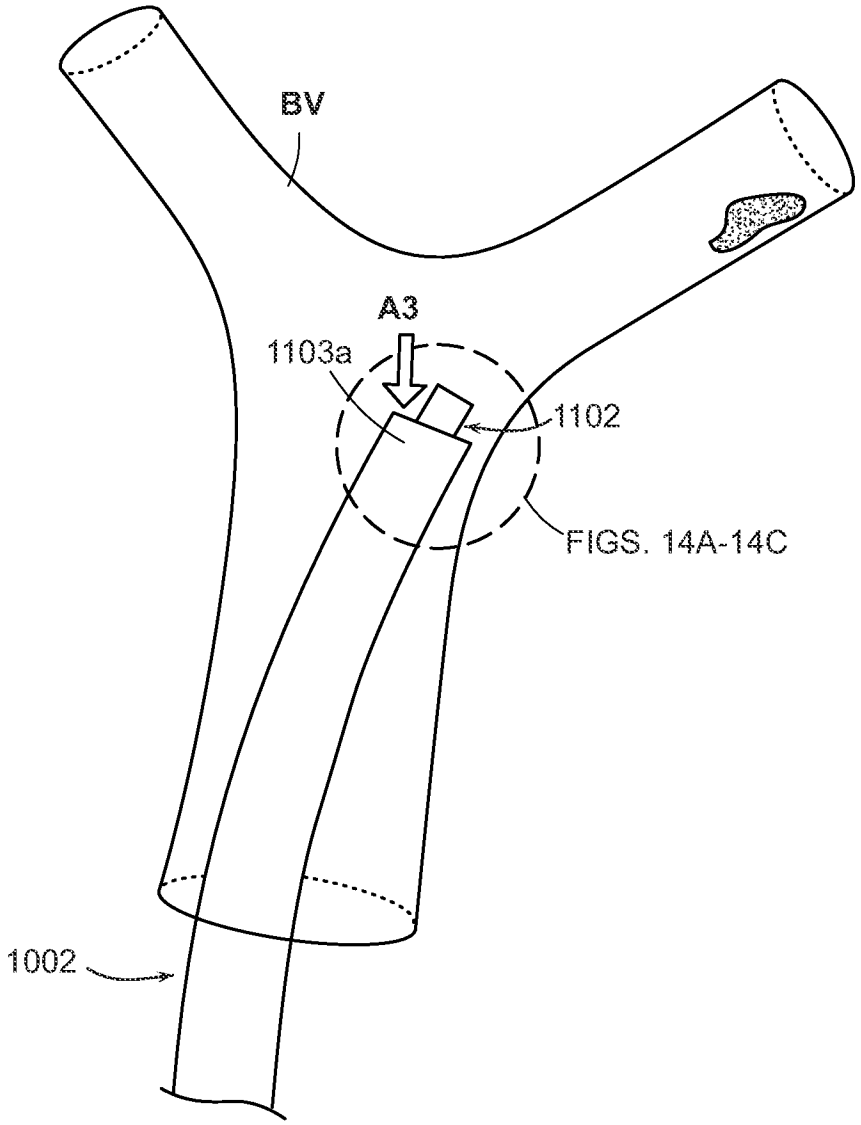

FIG. 13C

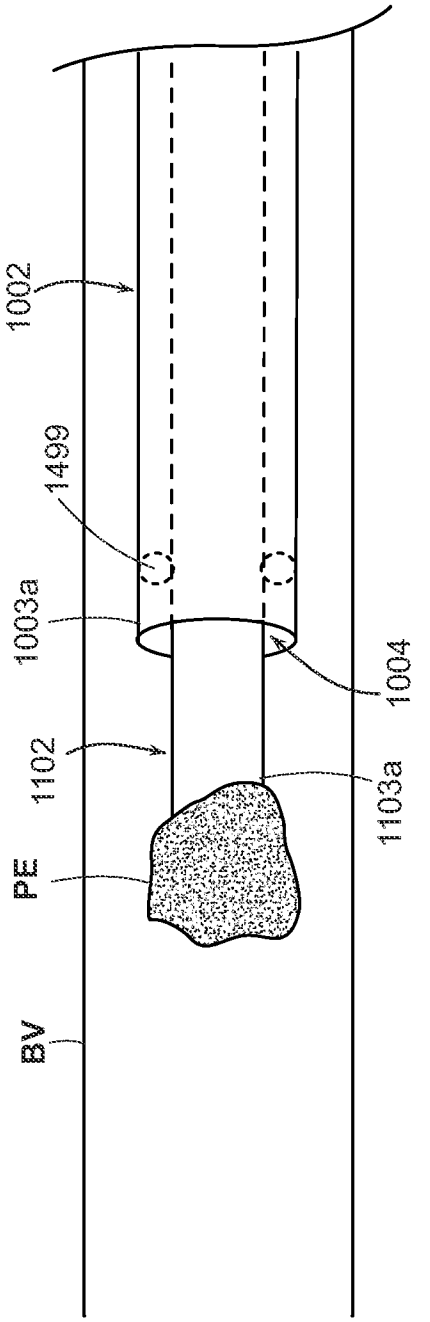

FIG. 14A

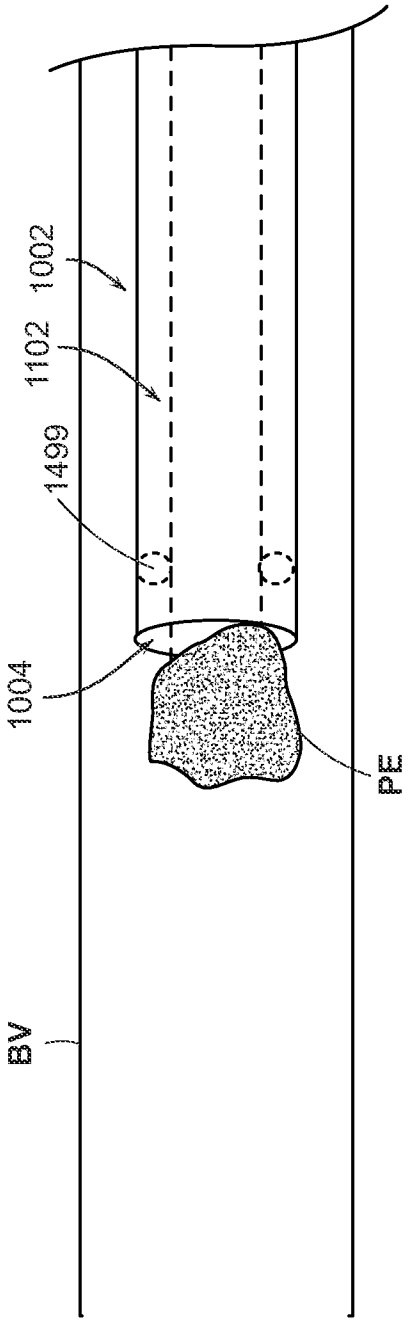

FIG. 14B

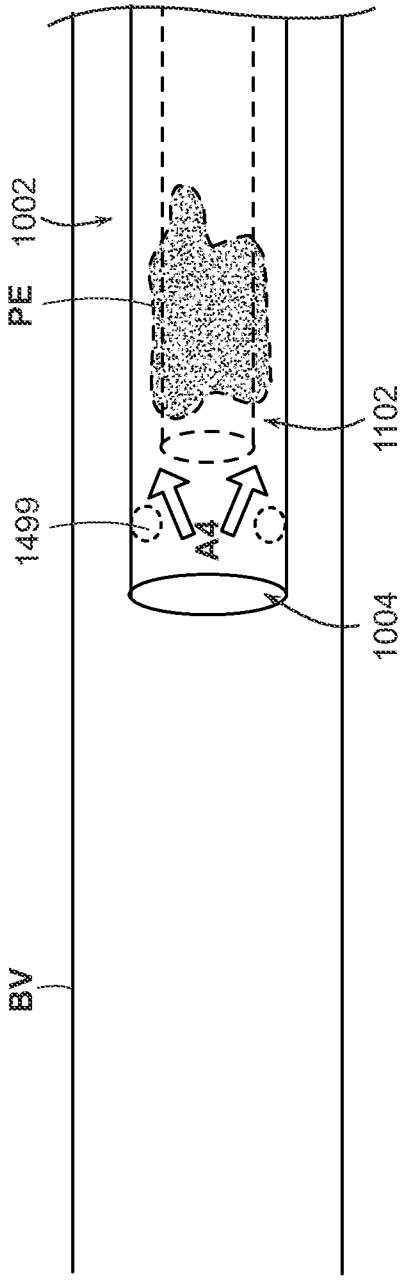

FIG. 14C

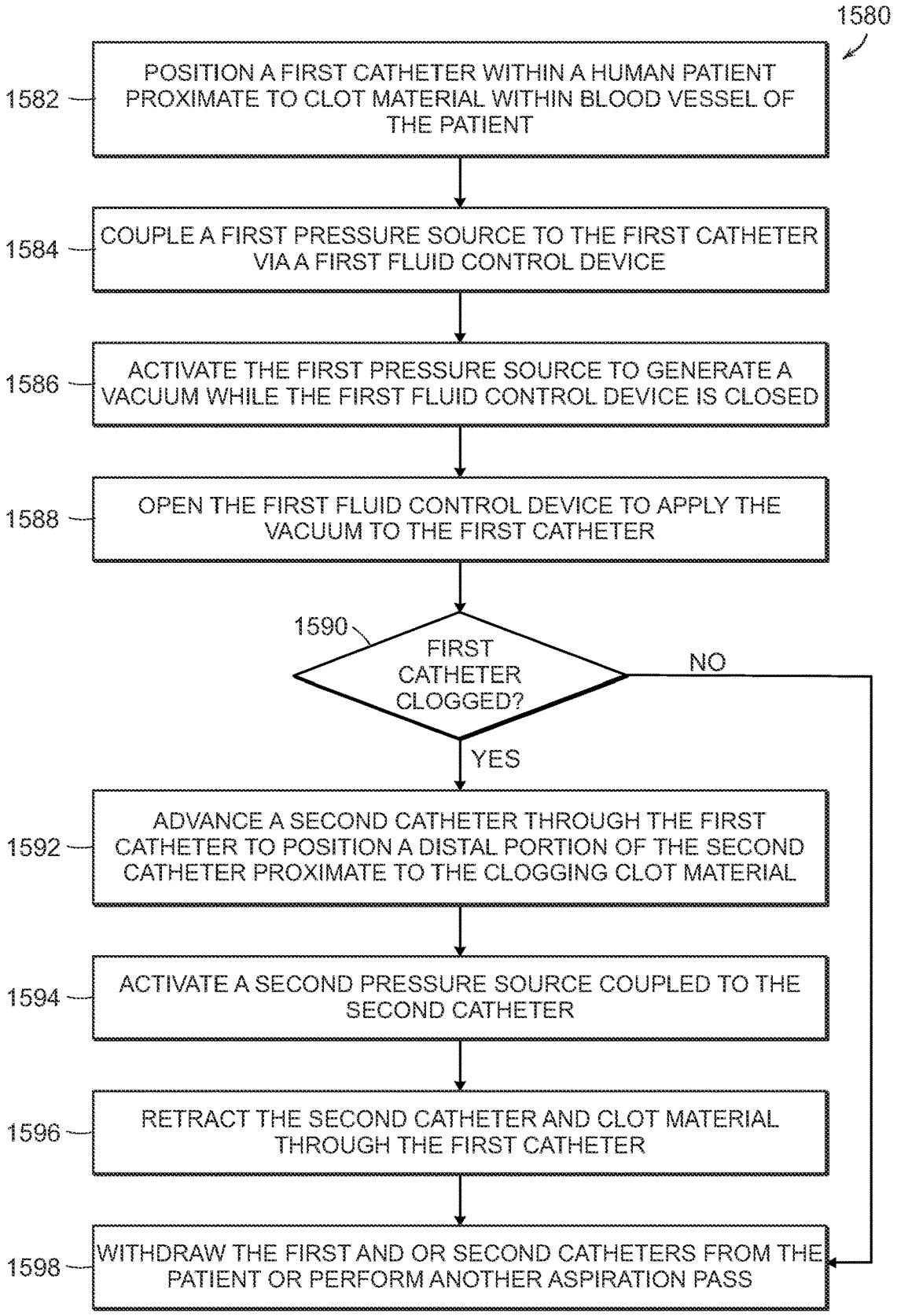
1580
1582
POSITION A FIRST CATHETER WITHIN A HUMAN PATIENT PROXIMATE TO CLOT MATERIAL WITHIN BLOOD VESSEL OF THE PATIENT
1584
COUPLE A FIRST PRESSURE SOURCE TO THE FIRST CATHETER VIA A FIRST FLUID CONTROL DEVICE
1586
ACTIVATE THE FIRST PRESSURE SOURCE TO GENERATE A VACUUM WHILE THE FIRST FLUID CONTROL DEVICE IS CLOSED
1588
OPEN THE FIRST FLUID CONTROL DEVICE TO APPLY THE VACUUM TO THE FIRST CATHETER
1590
FIRST CATHETER CLOGGED?
NO
YES
1592
ADVANCE A SECOND CATHETER THROUGH THE FIRST CATHETER TO POSITION A DISTAL PORTION OF THE SECOND CATHETER PROXIMATE TO THE CLOGGING CLOT MATERIAL
1594
ACTIVATE A SECOND PRESSURE SOURCE COUPLED TO THE SECOND CATHETER
1596
RETRACT THE SECOND CATHETER AND CLOT MATERIAL THROUGH THE FIRST CATHETER
1598
WITHDRAW THE FIRST AND OR SECOND CATHETERS FROM THE PATIENT OR PERFORM ANOTHER ASPIRATION PASS

FIG. 15

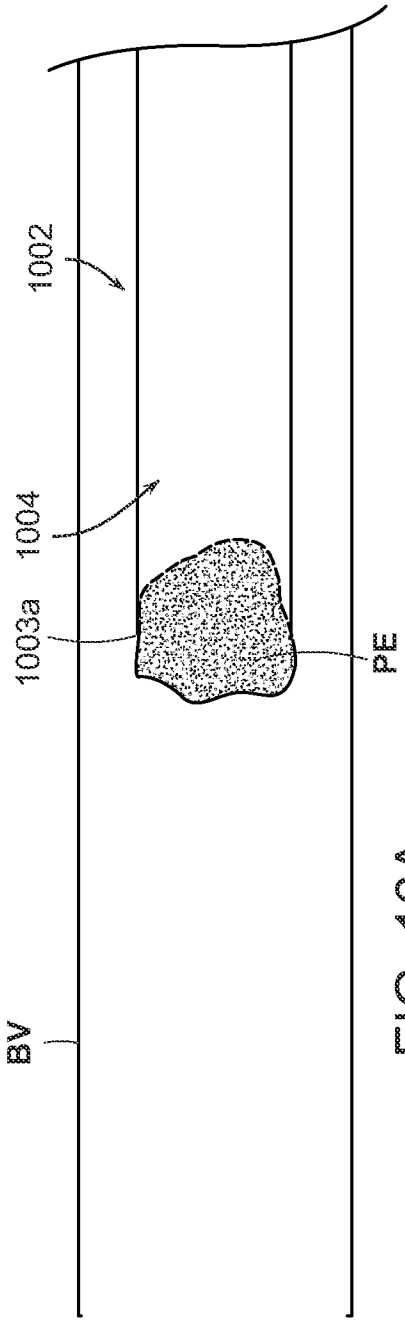

FIG. 16A

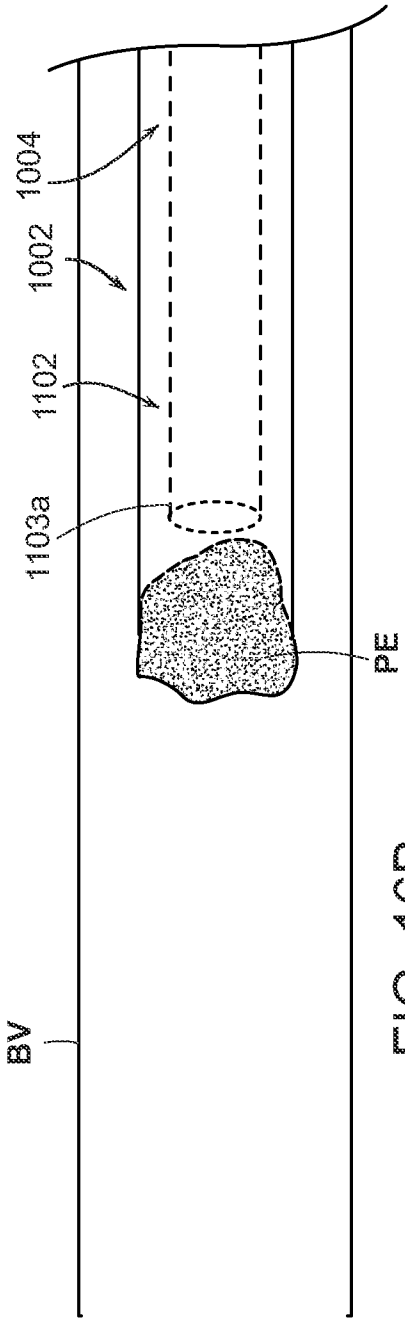

FIG. 16B

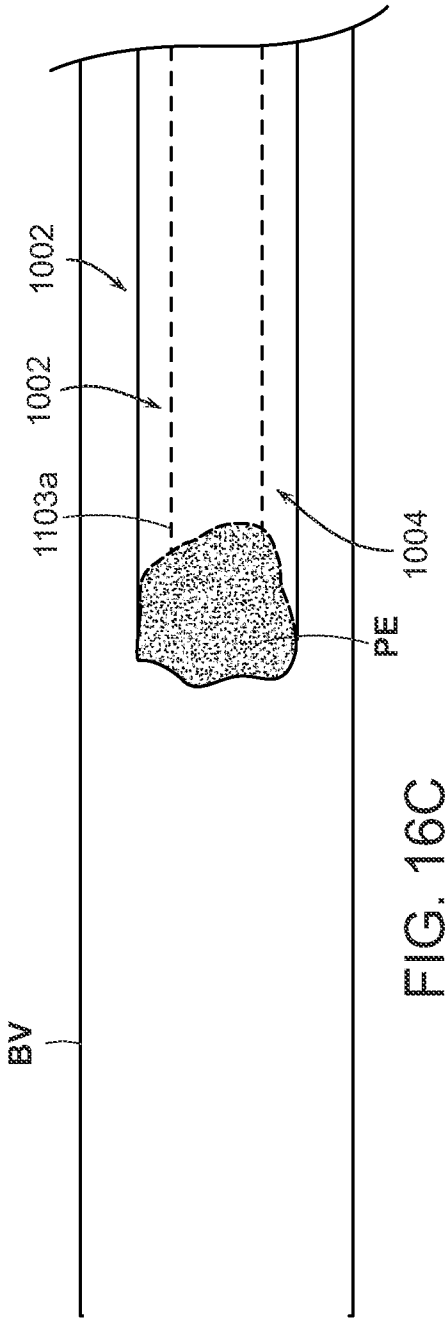

FIG. 16C

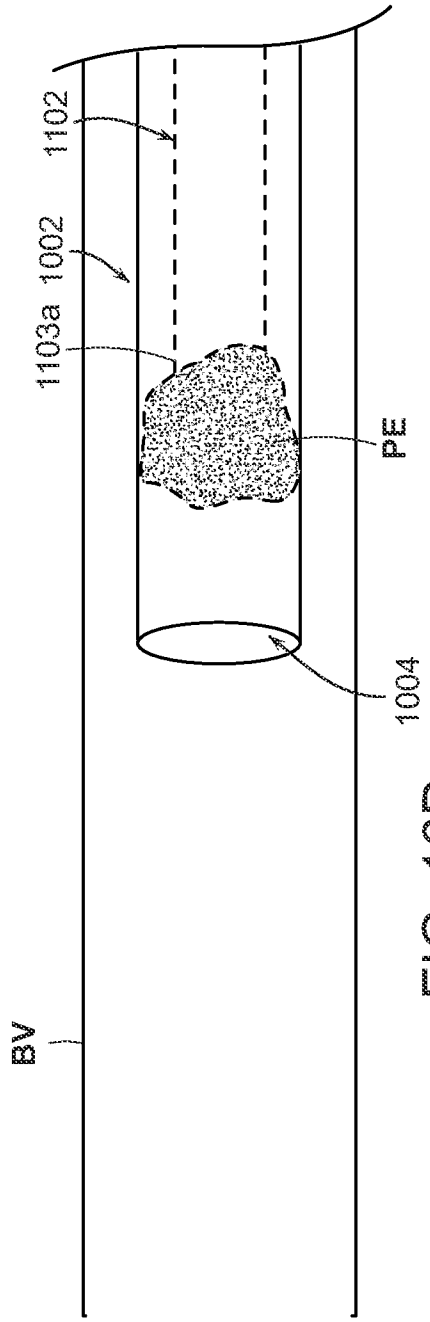

FIG. 16D

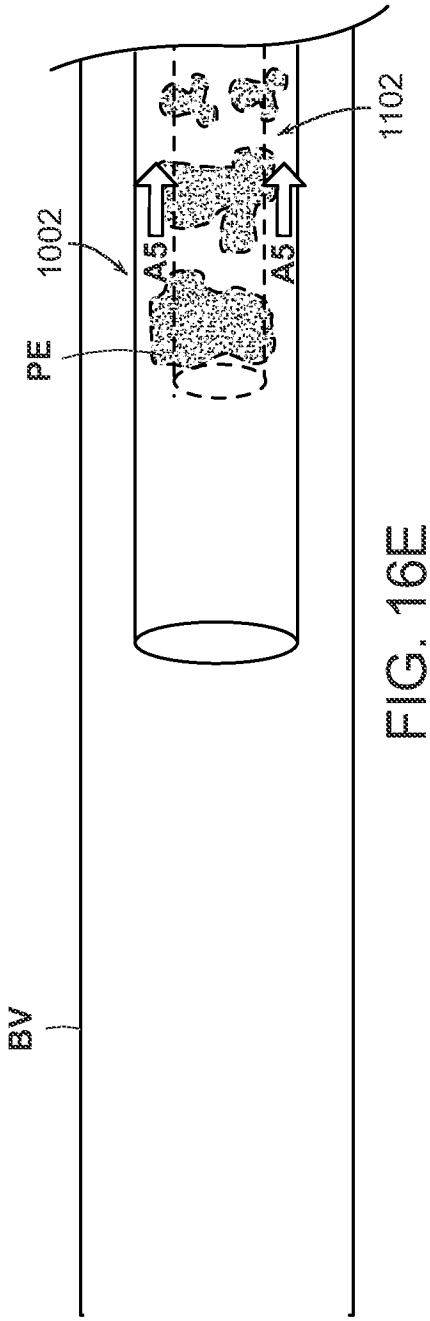

FIG. 16E

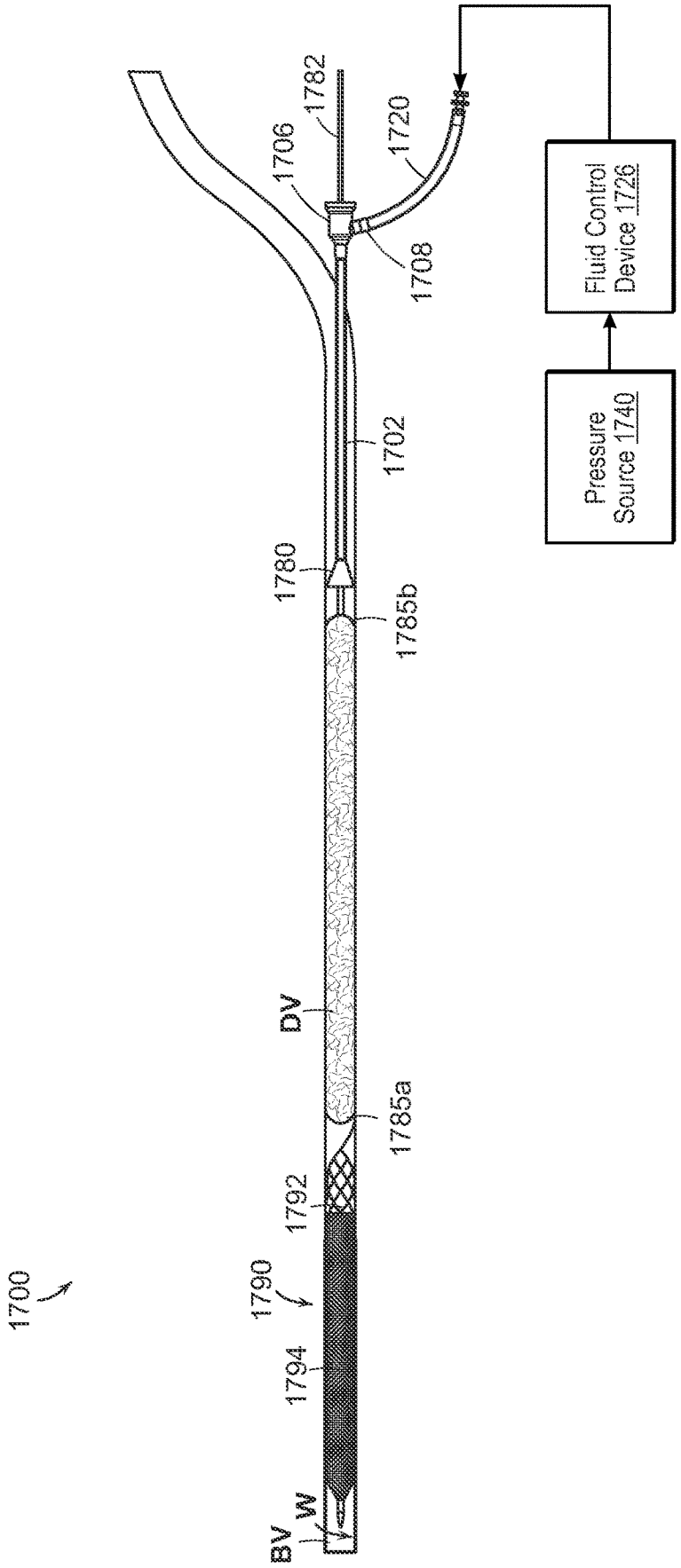
1700
1782
1706
1720
1708
1702
1780
1785b
DV
1785a
1792
1790
1794
BV
W
Fluid Control Device 1726
Pressure Source 1740

FIG. 17

FIG. 18A

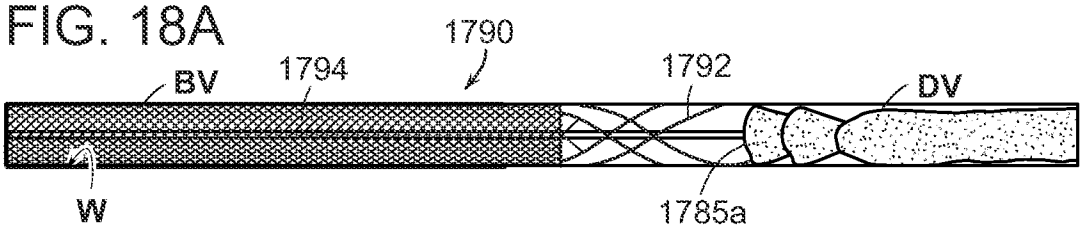

FIG. 18B

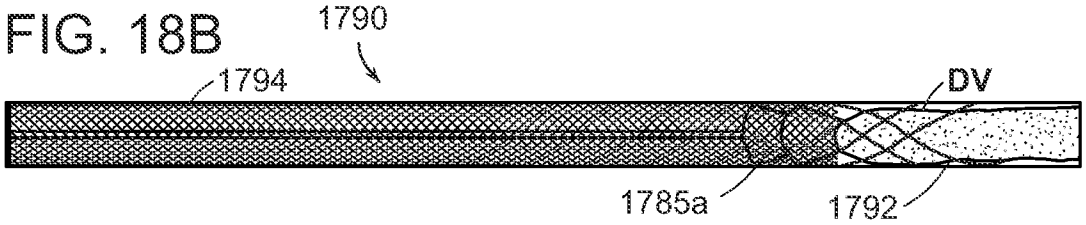

FIG. 18C

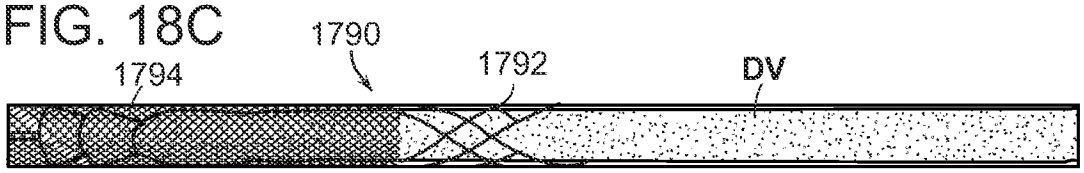

FIG. 18D

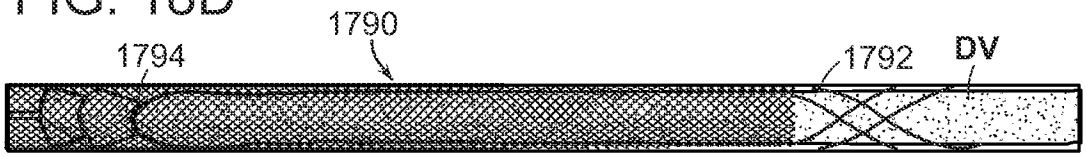

FIG. 18E

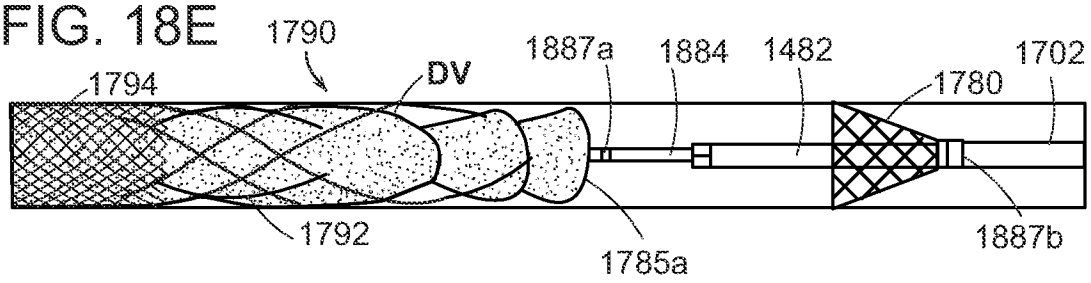

FIG. 18F

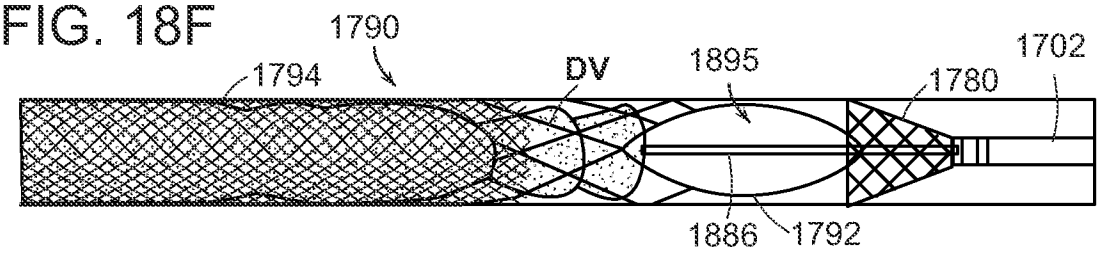

FIG. 18G

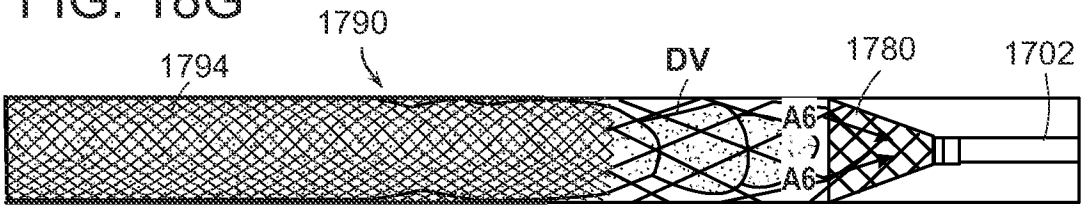

FIG. 18H

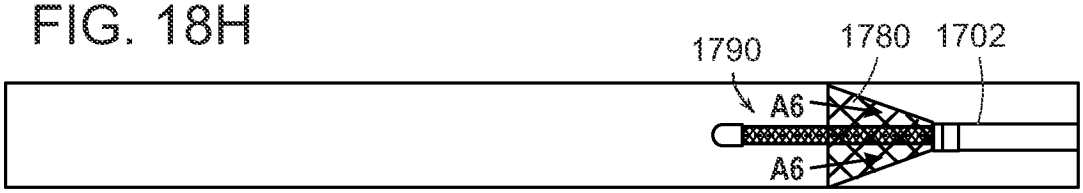

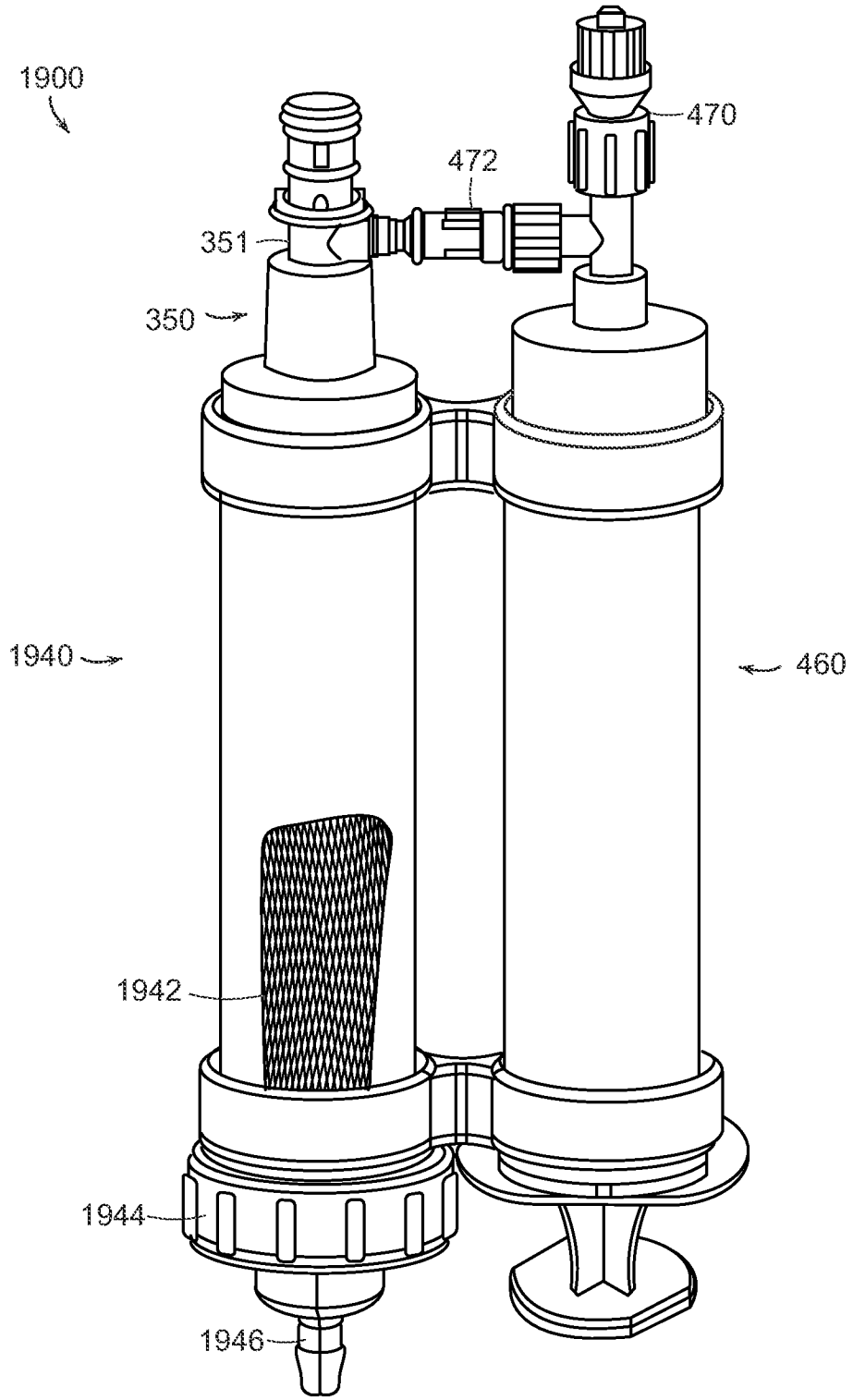

FIG. 19

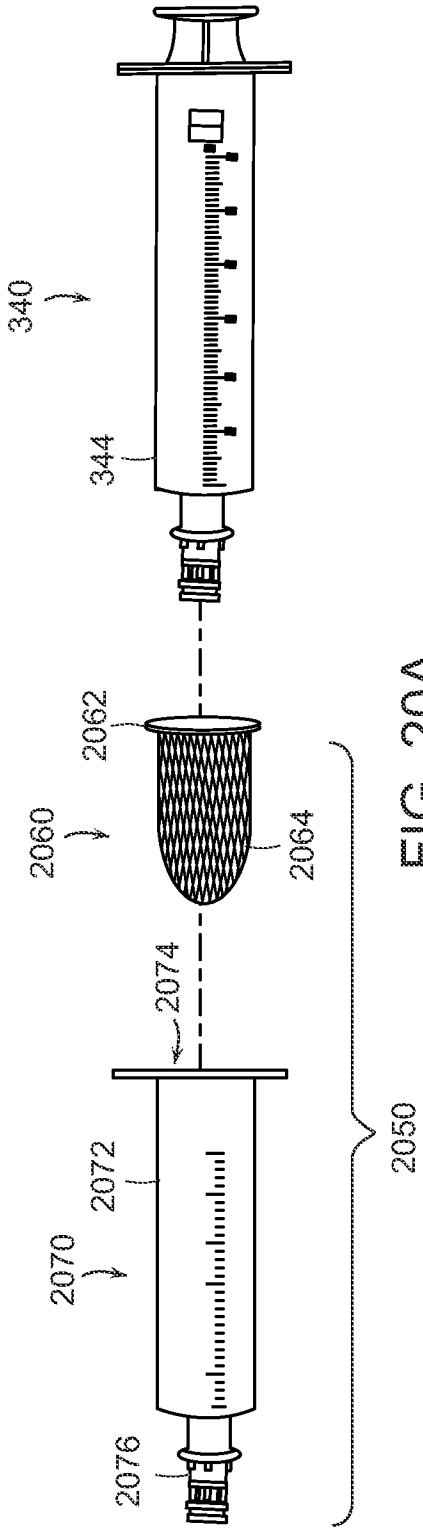

FIG. 20A

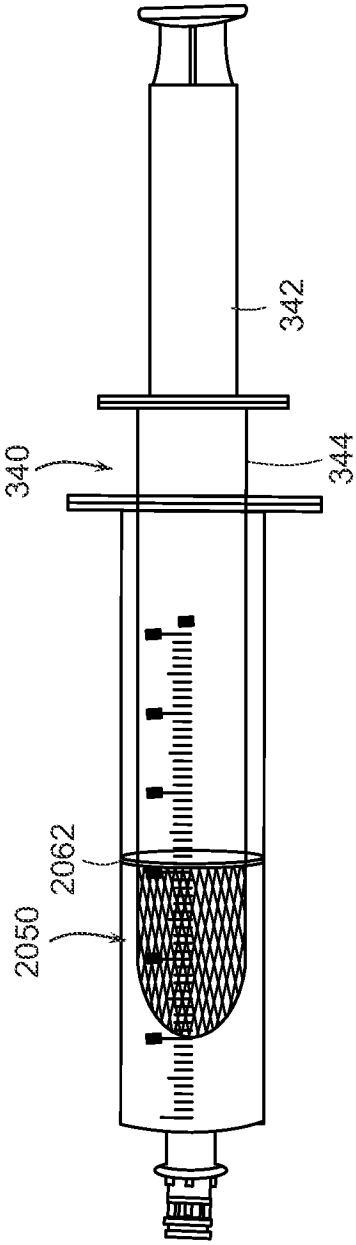

FIG. 20B

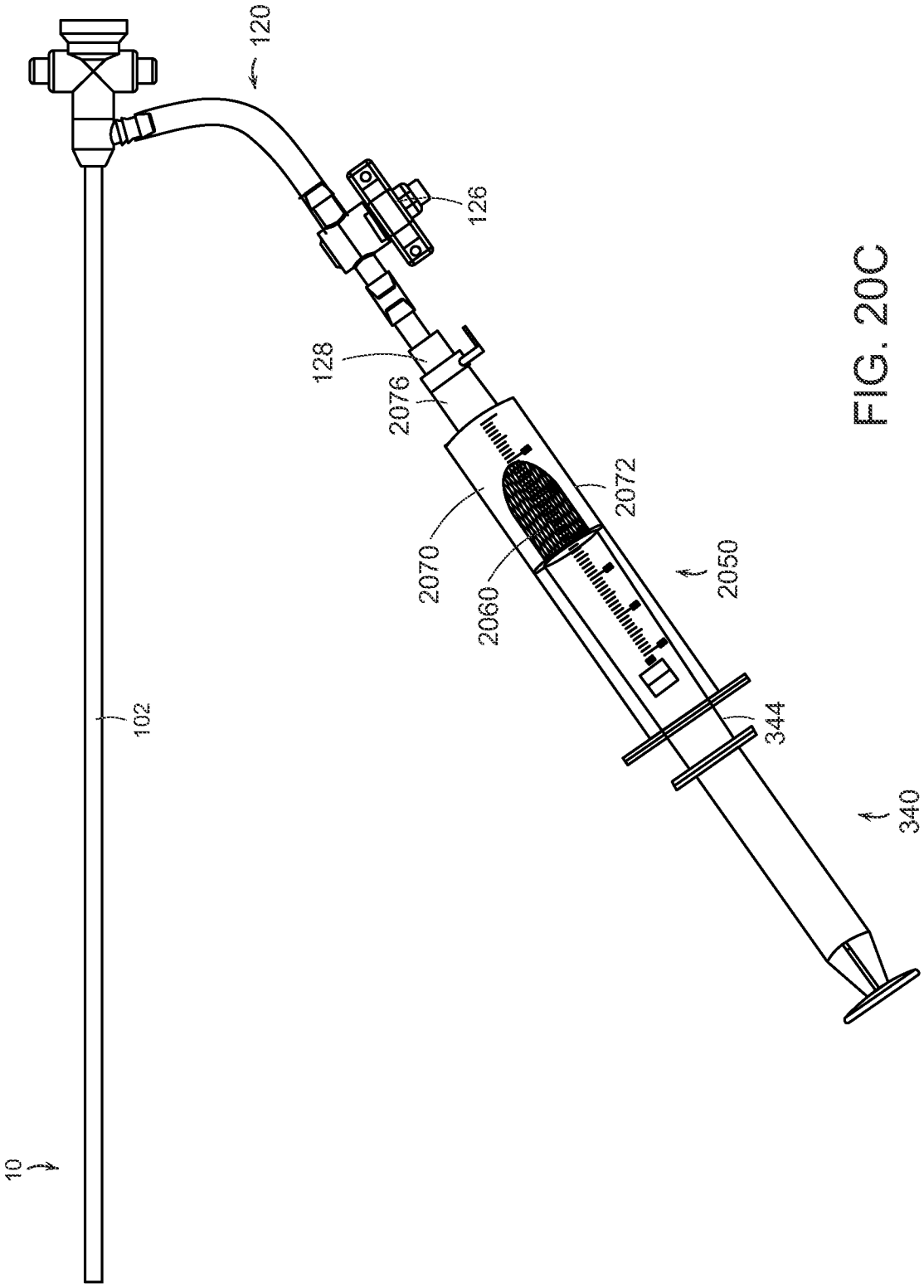

FIG. 20C

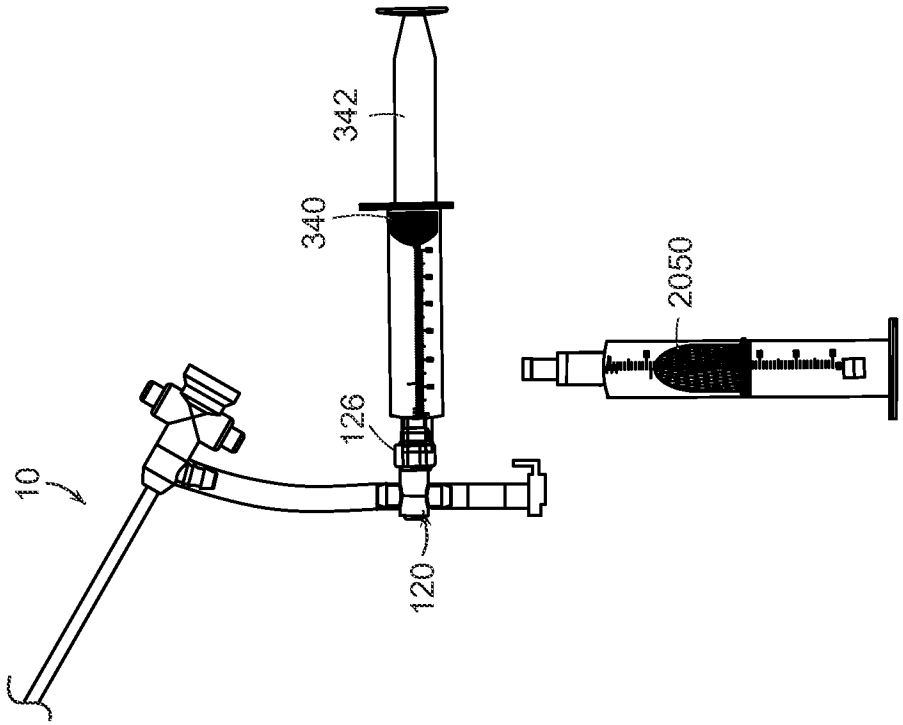

FIG. 20E

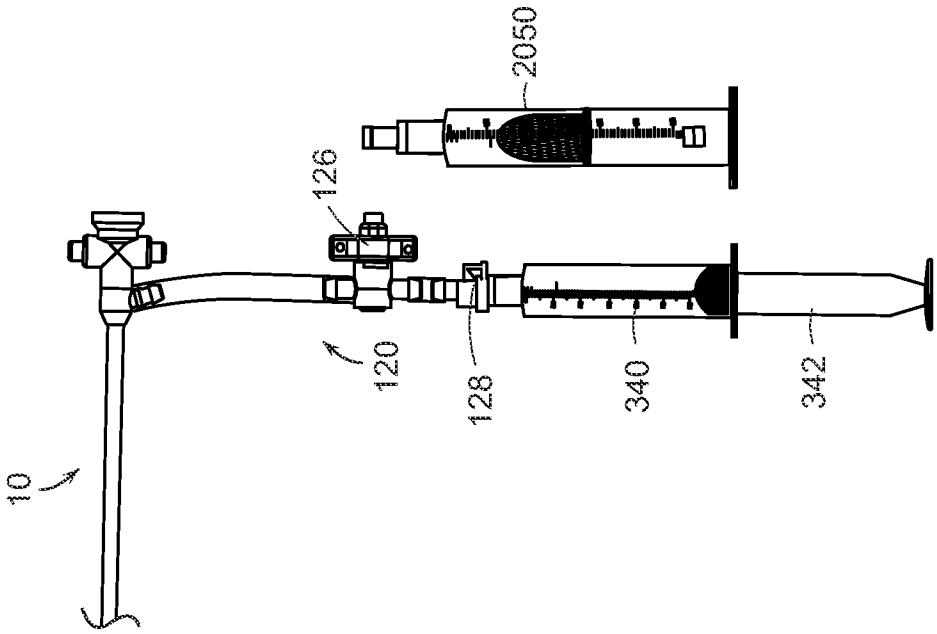

FIG. 20D

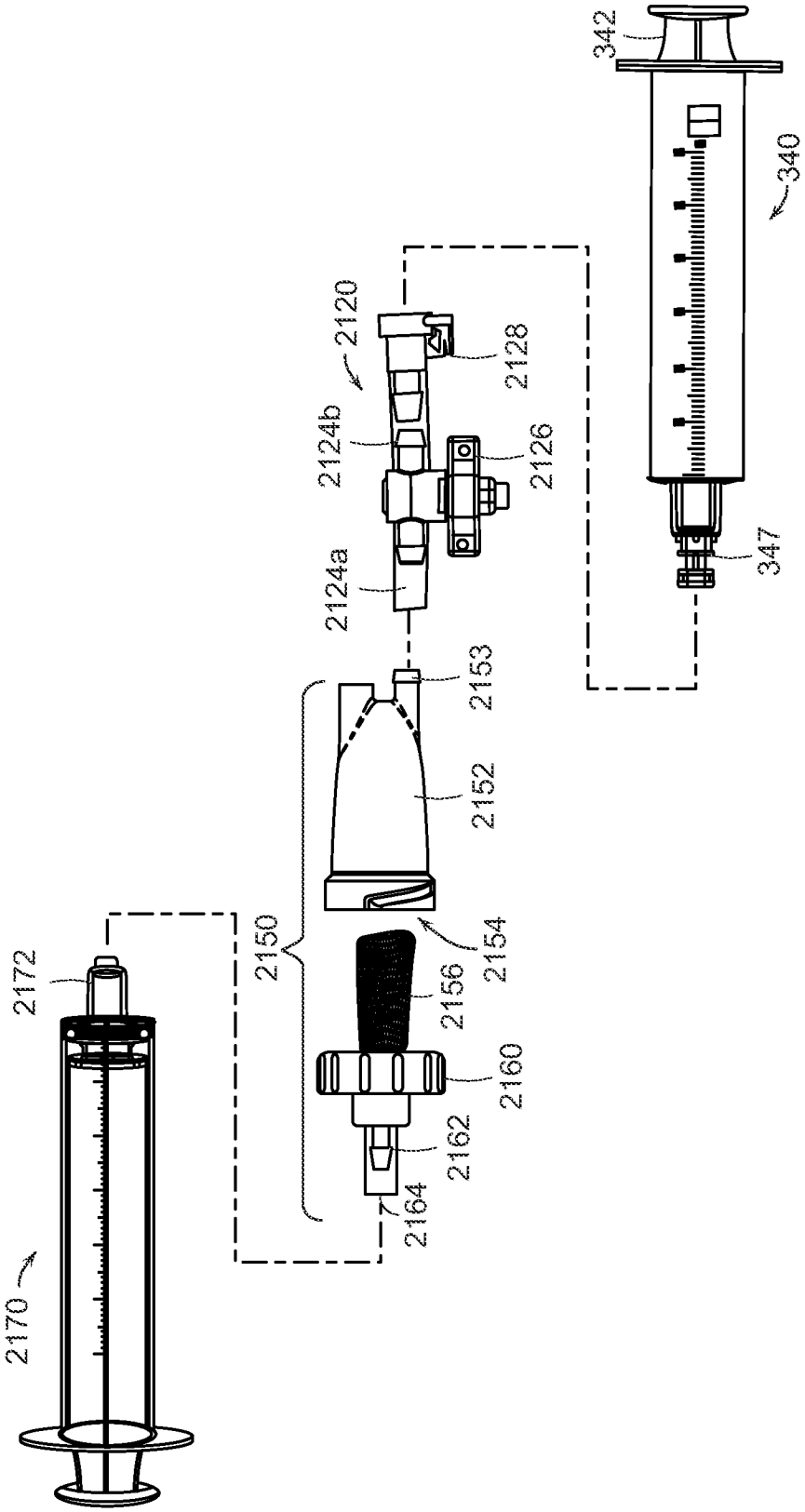
342
340
347
2120
2128
2124b
2126
2124a
2153
2152
2150
2154
2156
2160
2162
2164
2172
2170

FIG. 21A

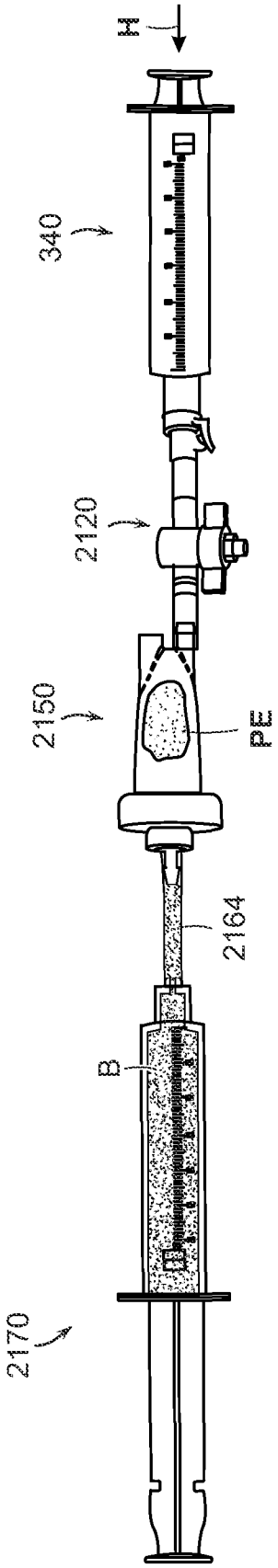

FIG. 21B

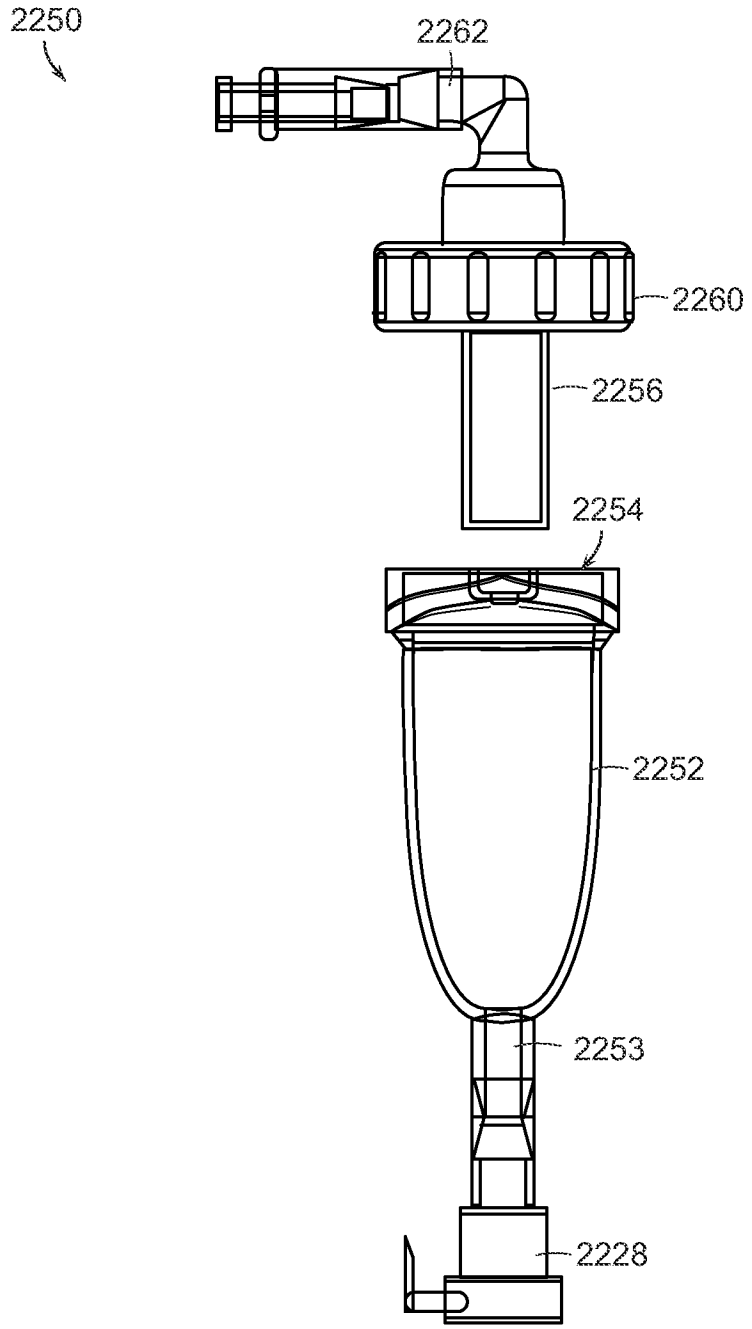

FIG. 22

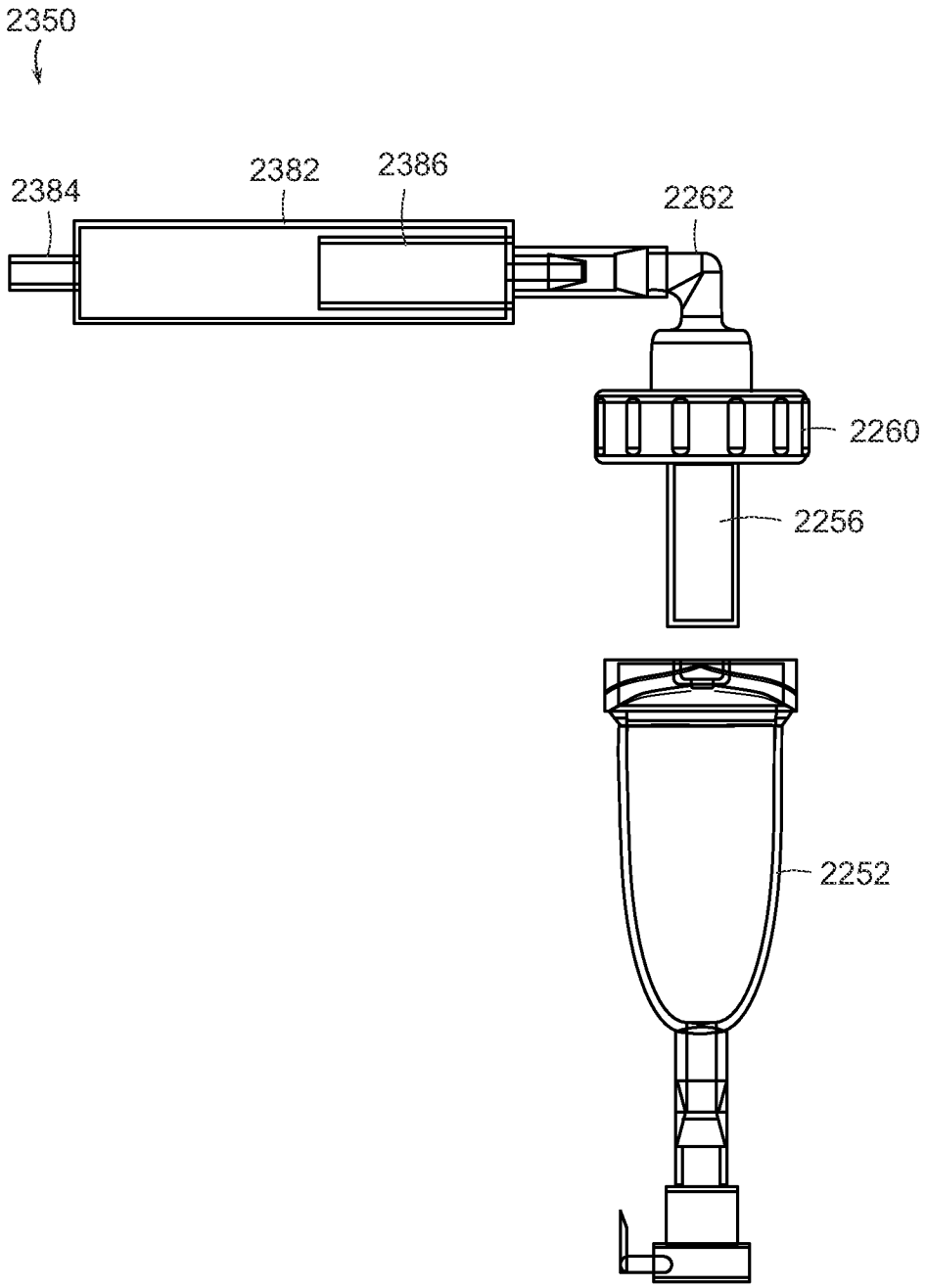

FIG. 23

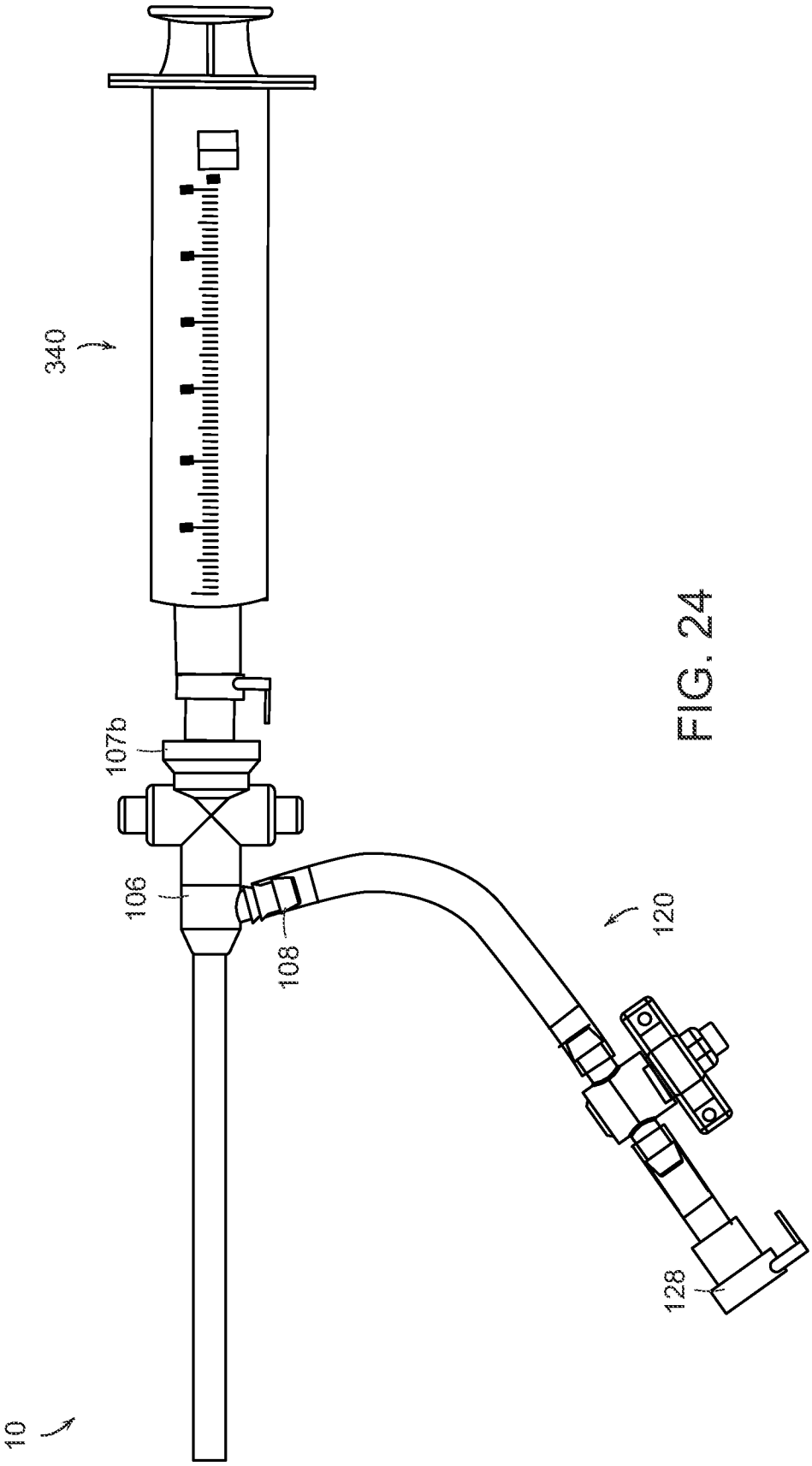

FIG. 24

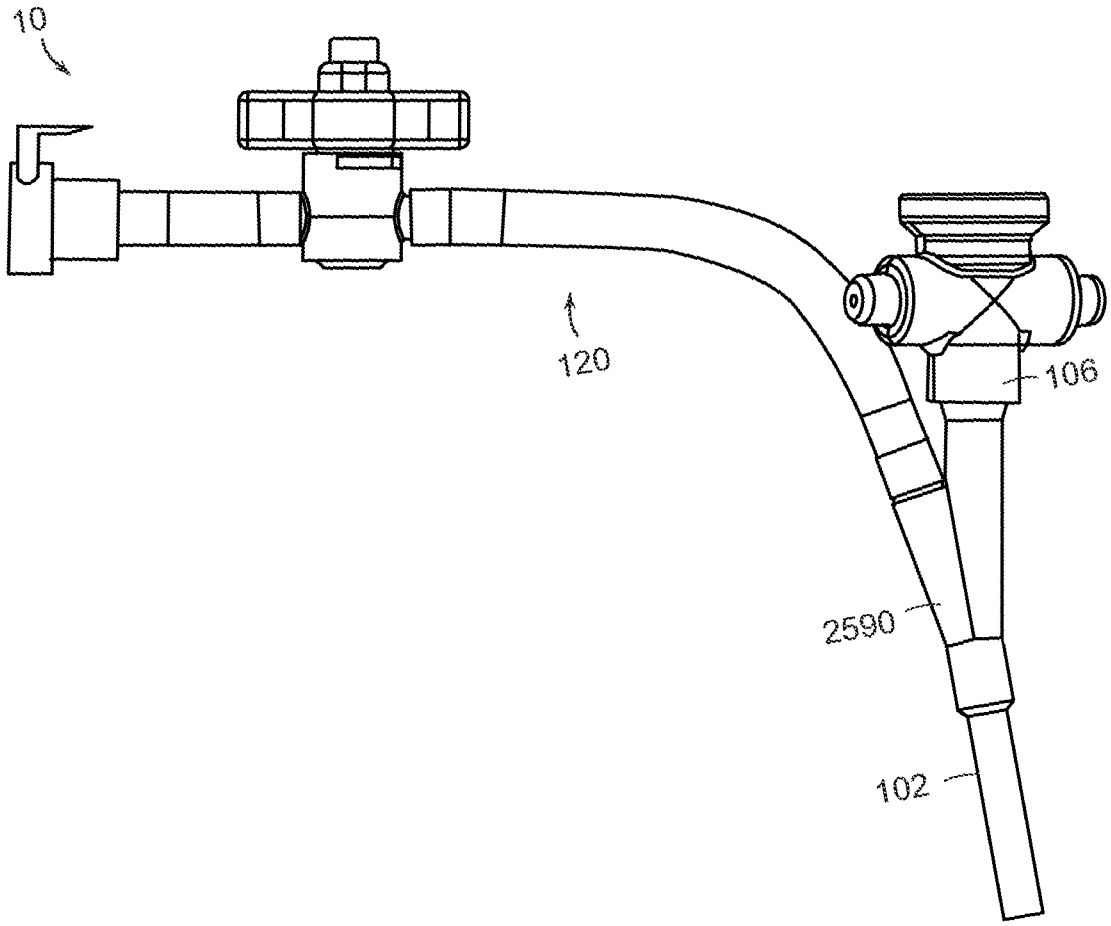

FIG. 25

SYSTEM FOR TREATING EMBOLISM AND ASSOCIATED DEVICES AND METHODS

CROSS-REFERENCES TO RELATED APPLICATIONS

This application is a continuation of U.S. patent application Ser. No. 16/536,185, filed Aug. 8, 2019, which claims the benefit of U.S. Provisional Patent Application No. 62/718,269, filed on Aug. 13, 2018, and U.S. Provisional Patent Application No. 62/718,248, filed on Aug. 13, 2018, each of which is herein incorporated by reference in its entirety.

TECHNICAL FIELD

The present technology relates generally to systems, methods, and devices for the intravascular treatment of emboli and/or thrombi within a blood vessel of a human patient. In particular, some embodiments of the present technology relate to systems for releasing stored vacuum pressure to aspirate clot material from a blood vessel.

BACKGROUND

Thromboembolic events are characterized by an occlusion of a blood vessel. Thromboembolic disorders, such as stroke, pulmonary embolism, heart attack, peripheral thrombosis, atherosclerosis, and the like, affect many people. These disorders are a major cause of morbidity and mortality.

When an artery is occluded by a clot, tissue ischemia develops. The ischemia will progress to tissue infarction if the occlusion persists. However, infarction does not develop or is greatly limited if the flow of blood is reestablished rapidly. Failure to reestablish blood flow can accordingly lead to the loss of limb, angina pectoris, myocardial infarction, stroke, or even death.

In the venous circulation, occlusive material can also cause serious harm. Blood clots can develop in the large veins of the legs and pelvis, a common condition known as deep venous thrombosis (DVT). DVT commonly occurs where there is a propensity for stagnated blood (e.g., long distance air travel, immobility, etc.) and clotting (e.g., cancer, recent surgery, such as orthopedic surgery, etc.). DVT can obstruct drainage of venous blood from the legs leading to swelling, ulcers, pain and infection. DVT can also create a reservoir in which blood clots can collect and then travel to other parts of the body including the heart, lungs, brain (stroke), abdominal organs, and/or extremities.

In the pulmonary circulation, the undesirable material can cause harm by obstructing pulmonary arteries—a condition known as pulmonary embolism. If the obstruction is upstream, in the main or large branch pulmonary arteries, it can severely compromise total blood flow within the lungs, and therefore the entire body. This can result in low blood pressure and shock. If the obstruction is downstream, in large to medium pulmonary artery branches, it can prevent a significant portion of the lung from participating in the exchange of gases to the blood resulting in low blood oxygen and buildup of blood carbon dioxide.

There are many existing techniques to reestablish blood flow through an occluded vessel. Embolectomies, for example, are a surgical technique involving incising a blood vessel and placing a balloon-tipped device (such as the Fogarty catheter) at the location of the occlusion. The balloon is then inflated at a point beyond the clot and used to withdraw the obstructing material back to the point of incision. The obstructing material is then removed by the surgeon. Although such surgical techniques have been useful, exposing a patient to surgery may be traumatic and best avoided when possible. Additionally, the use of a Fogarty catheter may be problematic due to the possible risk of damaging the interior lining of the vessel as the catheter is being withdrawn.

Percutaneous methods are also utilized for reestablishing blood flow. A common percutaneous technique is referred to as balloon angioplasty where a balloon-tipped catheter is introduced to a blood vessel (e.g., typically through an introducing catheter). The balloon-tipped catheter is then advanced to the point of the occlusion and inflated to dilate the stenosis. Balloon angioplasty is appropriate for treating vessel stenosis, but it is generally not effective for treating acute thromboembolisms as none of the occlusive material is removed and restenosis regularly occurs after dilation. Another percutaneous technique involves placing a catheter near the clot and infusing streptokinase, urokinase, or other thrombolytic agents to dissolve the clot. Unfortunately, thrombolysis typically takes hours to days to be successful. Additionally, thrombolytic agents can cause hemorrhage, and in many patients the thrombolytic agents cannot be used at all.

Various devices exist for performing a thrombectomy or removing other foreign material. However, such devices have been found to have structures which are either highly complex, cause trauma to the treatment vessel, or lack the ability to be appropriately fixed against the vessel. Furthermore, many of the devices have highly complex structures that lead to manufacturing and quality control difficulties as well as delivery issues when passing through tortuous or small diameter catheters. Less complex devices may allow the user to pull through the clot, particularly with inexperienced users, and such devices may not completely capture and/or collect all of the clot material.

Thus, there exists a need for improved systems and methods for embolic extraction.

BRIEF DESCRIPTION OF THE DRAWINGS

Many aspects of the present technology can be better understood with reference to the following drawings. The components in the drawings are not necessarily to scale. Instead, emphasis is placed on illustrating clearly the principles of the present disclosure.

FIG. **1** is a partially schematic side view of a clot removal system configured in accordance with the present technology.

FIG. **2** is a side view of a locking syringe configured in accordance with the present technology.

FIG. **3**A is a side view of a locking syringe configured in accordance with the present technology.

FIG. **3**B is a side view of an adaptor for connecting the locking syringe of FIG. **3**A to the clot removal system of FIG. **1** configured in accordance with the present technology.

FIG. **3**C is a side view of the adaptor of FIG. **3**B coupled to the locking syringe of FIG. **3**A.

FIG. **3**D is a side view of the locking syringe of FIG. **3**A coupled to the clot removal system of FIG. **1** via the adaptor of FIG. **3**B.

FIG. **4**A is a perspective side view of another pressure source configured in accordance with the present technology, and FIGS. **4**B and **4**C are enlarged schematic side views of the pressure source of FIG. **4**A during operation.

FIG. **5** is a cross-sectional side view of an automatic release syringe configured in accordance with the present technology.

FIG. **6** is a perspective top view of a syringe configured in accordance with the present technology.

FIG. **7** is a side view of an over-wire locking syringe configured in accordance with the present technology.

FIG. **8** is a flow diagram of a process or method for operating a clot removal system in accordance with the present technology.

FIGS. **9**A-**9**C are side views of a proximal portion of the clot removal system of FIG. **1** during a clot removal procedure using the locking syringe of FIG. **3** in accordance with the present technology.

FIGS. **10**A and **10**B are schematic illustrations of a distal portion of the clot removal system of FIG. **1** during a clot removal procedure in accordance with the present technology.

FIG. **11** is a partially schematic side view of another clot removal system configured in accordance with the present technology.

FIG. **12** is a flow diagram of another process or method for operating a clot removal system in accordance with the present technology.

FIGS. **13**A-**14**C are schematic illustrations of a distal portion of the clot removal system of FIG. **11** during a clot removal procedure in accordance with the present technology.

FIG. **15** is a flow diagram of another process or method for operating a clot removal system in accordance with the present technology.

FIGS. **16**A-**16**E are schematic illustrations of a distal portion of the clot removal system of FIG. **11** during a clot removal procedure in accordance with the present technology.

FIG. **17** is a partially schematic side view of another clot removal system configured in accordance with the present technology.

FIGS. **18**A-**18**H are side views of a distal portion of the clot removal system shown of FIG. **17** during a clot removal procedure in accordance with the present technology.

FIG. **19** is a perspective side view of a pressure source for filtering blood from aspirated clot material during a clot removal procedure configured in accordance with the present technology.

FIG. **20**A is a partially-exploded side view of a filter device and pressure source configured in accordance with the present technology.

FIG. **20**B is a perspective side view of the syringe of FIG. **20**A coupled to the filter device of the FIG. **20**A.

FIG. **20**C is a side view of the filter device and syringe of FIG. **20**B coupled to the clot removal system of FIG. **1**.

FIGS. **20**D and **20**E are side views of the syringe of FIG. **20**A coupled to the clot removal system of FIG. **1** for reintroducing blood to a patient.

FIG. **21**A is a partially-exploded side view of a filter device, a pressure source, and a reinfusion syringe configured in accordance with the present technology.

FIG. **21**B is a perspective side view of the filter device of FIG. **21**A coupled to the pressure source and the reinfusion syringe of FIG. **21**A.

FIG. **22** is a partially-exploded side view of a filter device configured in accordance with the present technology.

FIG. **23** is a partially-exploded side view of a filter device configured in accordance with the present technology.

FIG. **24** is an enlarged isometric view of the clot removal system of FIG. **1** configured in accordance with the present technology.

FIG. **25** is an enlarged isometric view of the clot removal system of FIG. **1** configured in accordance with the present technology.

DETAILED DESCRIPTION

The present technology is generally directed to methods and systems for removing clot material from a blood vessel of a human patient. In some embodiments, a catheter can be intravascularly positioned within a blood vessel such that a distal portion (e.g., a distal opening) of the catheter is positioned proximate to clot material within the blood vessel. The catheter can be fluidly coupled to a pressure source via a valve or other fluid control device positioned outside of the patient. With the valve closed, the pressure source can be activated to charge a vacuum chamber of the pressure source with a vacuum. The valve can then be opened to apply the vacuum to the catheter to thereby aspirate at least a portion of the clot material from the blood vessel into the catheter. In some embodiments, an interventional device can be delivered through the catheter and used to engage the clot material before and/or after the vacuum is applied to the catheter.

In one aspect of the present technology, the pressure source is configured to generate a vacuum and store the vacuum before the pressure source is fluidly connected to the catheter. Therefore, opening the fluid control device can instantaneously or nearly instantaneously apply the stored vacuum pressure to the catheter, thereby generating suction throughout the catheter. In particular, the suction is applied at the distal portion of the catheter proximate to the clot material. Pre-charging or storing the vacuum before applying the vacuum to the catheter can generate greater suction forces (and corresponding fluid flow velocities) at and/or near the distal portion of the catheter compared to, for example, simply activating the pressure source while it is fluidly connected to the catheter. The greater suction forces generated by application of the stored vacuum can be used to aspirate or otherwise remove clot material from within a blood vessel of a human patient.

Although many of the embodiments are described below with respect to devices, systems, and methods for treating a pulmonary embolism, other applications and other embodiments in addition to those described herein are within the scope of the technology (e.g., intravascular procedures other than the treatment of emboli, intravascular procedures for treating cerebral embolism, intravascular procedures for treating deep vein thrombosis (DVT), etc.). Additionally, several other embodiments of the technology can have different configurations, states, components, or procedures than those described herein. Moreover, it will be appreciated that specific elements, substructures, advantages, uses, and/or other features of the embodiments described with reference to FIGS. **1**-**25** can be suitably interchanged, substituted or otherwise configured with one another in accordance with additional embodiments of the present technology. Furthermore, suitable elements of the embodiments described with reference to FIGS. **1**-**25** can be used as standalone and/or self-contained devices. A person of ordinary skill in the art, therefore, will accordingly understand that the technology can have other embodiments with additional elements, or the technology can have other embodiments without several of the features shown and described below with reference to FIGS. **1**-**25**.

With regard to the terms "distal" and "proximal" within this description, unless otherwise specified, the terms can reference a relative position of the portions of a catheter subsystem with reference to an operator and/or a location in the vasculature. Also, as used herein, the designations "rearward," "forward," "upward," "downward," etc. are not meant to limit the referenced component to use in a specific orientation. It will be appreciated that such designations refer to the orientation of the referenced component as illustrated in the Figures; the systems of the present technology can be used in any orientation suitable to the user.

The headings provided herein are for convenience only and should not be construed as limiting the subject matter disclosed.

I. Selected Embodiments of Clot Removal Systems

FIG. **1** is a partially schematic side view of a clot treatment or clot removal system comprising an aspiration assembly **10** ("assembly **10**") configured in accordance with an embodiment of the present technology. In the illustrated embodiment, the assembly **10** includes a catheter subsystem **100**, a tubing subsystem **120**, and a pressure source **140**. The catheter subsystem **100** includes a catheter **102** (e.g., an aspiration catheter) comprising an elongated shaft defining a lumen **104** and having a distal portion **103***a* and a proximal portion **103***b*. The catheter subsystem **100** further includes a valve **106** that can be integral with or coupled to the proximal portion **103***b* of the catheter **102**.

In the illustrated embodiment, the valve **106** includes a distal portion **107***a*, a proximal portion **107***b*, and a lumen **109** extending therethrough from the distal portion **107***a* to the proximal portion **107***b*. The valve **106** further includes a flow controller (obscured in FIG. **1**) in the lumen **109**. In some embodiments, the valve is a hemostasis valve that is configured to maintain hemostasis during a clot removal procedure by preventing fluid flow in the proximal direction through the valve **106** as various components such as delivery sheaths, pull members, guidewires, interventional devices, other aspiration catheters (e.g., as described in detail with reference to FIGS. **11-16**E), etc., are inserted through the valve **106** to be delivered through the catheter **102** to a treatment site in a blood vessel. The valve **106** further includes a branch or side port **108** positioned distally of the flow controller in the lumen **109** and configured to fluidly couple the lumen **104** of the catheter **102** to the tubing subsystem **120**. In the illustrated embodiment, the valve **106** includes buttons **101** that can be actuated (e.g., depressed) to open a conduit within the lumen **109**. In some embodiments, the valve **106** can be a valve of the type disclosed in U.S. patent application Ser. No. 16/117,519, filed Aug. 30, 2018, and titled "HEMOSTASIS VALVES AND METHODS OF USE," which is incorporated herein by reference in its entirety. In some embodiments, the proximal portion **107***b* of the valve **106** is further configured to be detachably coupled (e.g., via a snap-fit arrangement) to a retraction/aspiration device for aspirating the lumen **104** of the catheter **102** and/or for retracting an interventional device, catheter, delivery sheath, catheter, etc., positioned within the lumen **104**. Specific details of such retraction/aspiration devices and associated methods are disclosed in U.S. Pat. No. 9,526,864, filed Jun. 9, 2015, and titled "RETRACTION AND ASPIRATION DEVICE FOR TREATING EMBOLISM AND ASSOCIATED SYSTEMS AND METHODS," which is incorporated herein by reference in its entirety.

The tubing subsystem **120** fluidly couples the catheter subsystem **100** to the pressure source **140**. More specifically, the tubing subsystem **120** can include one or more tubing sections **124** (individually labeled as a first tubing section **124***a* and a second tubing section **124***b*), at least one fluid control device **126** (e.g., a valve), and at least one connector **128** for fluidly coupling the tubing subsystem **120** to the pressure source **140** and/or other suitable components. More specifically, in the illustrated embodiment, the fluid control device **126** is a stopcock that is fluidly coupled to (i) the side port **108** of the valve **106** via the first tubing section **124***a* and (ii) the connector **128** via the second tubing section **124***b*. In some embodiments, the fluid control device **126** can define a lumen having a diameter (or other cross-sectional dimension) that is greater than or equal to a diameter of the lumen **104** of the catheter **102**, a diameter of the first tubing section **124***a*, and/or a diameter of the second tubing section **124***b*.

The fluid control device **126** is externally operable by a user to regulate the flow of fluid therethrough and, specifically, from the lumen **104** of the catheter **102** to the pressure source **140**. In other embodiments, the fluid control device **126** can be a clamp that can be actuated (e.g., compressed or squeezed by the hand of a user) to partially or fully restrict fluid flow through the tubing section **124***a* and/or the tubing section **124***b*. In yet other embodiments, the fluid control device **126** can be omitted and its functionality incorporated into the pressure source **140** (e.g., as described in detail below with reference to FIG. **5**). In some embodiments, the fluid control device **126** can include a quick-release mechanism (e.g., a spring-loaded apparatus) for rapidly opening, unclamping, etc., the fluid control device **126** to (e.g., instantaneously or nearly instantaneously) fluidly connect the pressure source **140** and the catheter **102**. In some embodiments, the fluid control device **126** can be opened/closed automatically (e.g., by a motor, switch, etc.). When the pressure source **140** is pre-charged with a vacuum, as described in detail below, such a quick-release fluid control device **126** can reduce the time needed for pressure in the assembly **10** to equalize after opening of the fluid control device **126**, and can thereby increase suction forces generated at the distal portion **103***a* of the catheter **102**.

In some embodiments, the connector **128** is a quick-release connector (e.g., a quick disconnect fitting) that enables rapid coupling/decoupling of the catheter **102** and the fluid control device **126** to/from the pressure source **140**. In other embodiments, the tubing subsystem **120** can have more or fewer tubing sections, connectors, and/or fluid control devices, and can have other suitable configurations. In some embodiments, one or more of the components can be permanently connected and/or integrally formed.

The pressure source **140** is configured to generate (e.g., form, create, charge, build-up, etc.) a vacuum (e.g., negative relative pressure) and store the vacuum for subsequent application to the catheter subsystem **100**. Further details of suitable pressure sources are described in detail below with reference to FIGS. **2-7**. During operation of the assembly **10**, a user can first close the fluid control device **126** before activating the pressure source **140** to build up vacuum pressure within the pressure source **140** (e.g., a vacuum chamber of the pressure source **140**). In some embodiments, the user can control or select the volume of the generated vacuum. In this manner, a vacuum is charged within the pressure source **140** before the pressure source **140** is fluidly connected to the catheter subsystem **100**. To aspirate the lumen **104** of the catheter **102**, the user can open the fluid control device **126** to fluidly connect the pressure source **140** to the catheter subsystem **100** and thereby apply or release the vacuum stored in the pressure source **140** to the lumen

104 of the catheter 102. Opening of the fluid control device 126 instantaneously or nearly instantaneously applies the stored vacuum pressure to the tubing subsystem 120 and the catheter 102, thereby generating suction throughout the catheter 102. In particular, the suction is applied at the distal portion 103*a* of the catheter 102. In one aspect of the present technology, pre-charging or storing the vacuum before applying the vacuum to the lumen 104 of the catheter 102 is expected to generate greater suction forces (and corresponding fluid flow velocities) at and/or near the distal portion 103*a* of the catheter 102 compared to simply activating the pressure source 140 while it is fluidly connected to the catheter 102. As described in detail below, the suction forces generated by application of the stored vacuum can be used to aspirate or otherwise remove clot material from within a blood vessel of a human patient.

II. Selected Embodiments of Pressure Sources for Use with Clot Removal Systems

As described in detail above with reference to FIG. 1, the assembly 10 of the present technology includes a pressure source (e.g., a vacuum source, negative pressure source, etc.) configured to charge a vacuum that can be applied to the catheter subsystem 100 to generate suction forces for aspirating clot material from within a blood vessel. In general, the pressure source can be any suitable source or combination of sources for generating and/or storing negative pressure. In some embodiments, the pressure source can be a pump (e.g., an electric pump coupled to a vacuum chamber) while, in other embodiments, the pressure source can include one or more syringes that can be actuated or otherwise activated by a user of the assembly 10 to generate and store a vacuum therein.

FIG. 2 is a side view of a pressure source 240 comprising a vacuum-pressure locking syringe ("syringe 240") configured in accordance with the present technology. In some embodiments, the syringe 240 can be of the kind sold under the trademark "VacLok" by Merit Medical System, Inc. In the illustrated embodiment, the syringe 240 includes a plunger 242 slidably and rotatably positioned within a chamber or barrel 244. The barrel 244 is shown as transparent in FIG. 2 for the sake of clarity. The plunger 242 includes a seal 243 and a plurality of index members 246 defining slots 248 between adjacent pairs thereof. A tab member 245 projects inwardly from the interior surface of the barrel 244 and is configured to be removably positioned in the slots 248 for locking the plunger 242 in position relative to the barrel 244. In some embodiments, the barrel 244 can be made of a transparent material that permits a user to visualize material (e.g., clot material) within the barrel 244 and to visualize the relative position between the slots 248 and tab member 245 for locking the syringe 240.

Referring to both FIGS. 1 and 2 together, the syringe 240 further includes a tip 247 for coupling the syringe 240 to the tubing subsystem 120. In the illustrated embodiment, the tip 247 is a standard luer connector that can be coupled to the connector 128 via one or more suitable adaptors. The tip 247 further defines a lumen or bore 249 having an inner diameter D_1. In some embodiments, the diameter D_1 is about 0.103", or about 0.080" to about 0.200", or about 0.100" to about 0.150", or about 0.100" to about 0.110". In some embodiments, the inner diameter D_1 is about 14 French.

During operation of the assembly 10, a user can first close the fluid control device 126 and then grip the plunger 242 and/or the barrel 244 to withdraw (e.g., retract) the plunger 242 at least partially out of the barrel 244 to thereby generate a vacuum in the barrel 244. Once the user has withdrawn the plunger 242 to a sufficient or desired volume, the user can lock the plunger 242 by rotating the plunger 242 relative to the barrel 244 such that the tab member 245 is positioned within a corresponding one of the slots 248. In other embodiments, the syringe 240 may not be a locking syringe, and the user can instead hold the plunger 242 in position relative to the barrel 244. Moreover, the user can control the volume of the vacuum—by withdrawing the plunger 242 more or less—to provide a desired amount or level of suction/aspiration upon opening of the fluid control device 126. In some embodiments, the syringe has a volume of about 60 cc or less than about 60 cc.

FIG. 3A is a side view of a pressure source 340 comprising a vacuum-pressure locking syringe ("syringe 340") configured in accordance with the present technology. The syringe 340 can have some features generally similar to the features of the syringe 240 described above with reference to FIG. 2. For example, the syringe 340 includes a plunger 342 slidably and rotatably positioned within a barrel 344, and the plunger 342 includes a plurality of index members 346 defining slots 348 between adjacent pairs thereof. The barrel 344 is shown as transparent in FIG. 3A (and FIG. 3C) for the sake of clarity. While withdrawing the plunger 342, a user can lock the plunger 342 at a specified volume by rotating the plunger 342 relative to the barrel 344 such that a tab member 345 on the interior surface of the barrel 344 is positioned within a corresponding one of the slots 348. In some embodiments, the syringe 340 has a maximum volume of about 60 cc or greater than 60 cc.

In the illustrated embodiment, the syringe 340 includes a large-bore tip 347, such as a Toomey tip, defining an inner lumen or bore 349. In some embodiments, the bore 349 can have an inner diameter D_2 that is greater than or equal to the largest inner diameter of the assembly 10 (e.g., of the catheter 102 and tubing subsystem 120). In certain embodiments, the tip 347 can be about 26 French or greater. Accordingly, referring to FIGS. 2 and 3A together, the diameter D_2 can be greater than the dimension D_1. For example, the dimension D_2 can be about two, three, four, or more times greater than the diameter D_1.

FIG. 3B is a side view of an adaptor 350 for connecting the syringe 340 to the catheter subsystem 100 configured in accordance with the present technology. FIG. 3C is a side view of the adaptor 350 coupled to the syringe 340, and FIG. 3D is a side view of the syringe 340 coupled to the tubing subsystem 120 via the adaptor 350. The adaptor 350 is shown as partially transparent in FIG. 3C for the sake of illustration. Referring to FIG. 3B, the, the adaptor 350 includes (i) a first portion 351 defining a first lumen or bore 352 having an inner diameter D_3, (ii) a second portion 353 defining a second lumen or bore 354, and (iii) a stepped surface or interface 355 between the first and second portions 351, 353. The first portion 351 can further include a seal 357 such as an O-Ring around an exterior surface thereof.

Referring to FIGS. 3A-3D together, the second bore 354 of the adaptor 350 is configured to removably receive the tip 347 of the syringe 340 therein. In some embodiments, the tip 347 can be snuggly received in the second bore 354 via an interference fit. In some embodiments, a seal (e.g., an O-ring) can be positioned between an exterior surface of the tip 347 and an interior surface of the second bore 354. In other embodiments, the syringe 340 can be permanently coupled or integrally formed with the adaptor 350. The first portion 351 of the adaptor 350 is configured to be removably positioned within the connector 128 of the tubing subsystem

120 to fluidly couple the syringe **340** to the tubing subsystem **120**. In some embodiments, the first portion **351** of the adaptor **350** can be pushed into the connector **128** until the interface **355** abuts the connector **128**. When the first portion **351** of the adaptor **350** is positioned within the connector **128**, the seal **357** seals the interface between the connector **128** and the adaptor **350**.

The diameter D_3 of the first bore **352** of the adaptor **350** can be selected to be about the same as or greater than the greatest inner diameter of the assembly **10** (e.g., of the catheter **102** and the tubing subsystem **120**). For example, the catheter **102** can be about 9 French or greater, and the diameter D_3 can be selected to be larger than the size of the catheter **102**. Accordingly, when the fluid control device **126** is open, the continuous lumen between the catheter **102** and the syringe **340** can have a generally constant diameter and/or does not contain any narrowing at the interface between the syringe **340** and the tubing subsystem **120**. That is, the adaptor **350** can connect the syringe **340** and the tubing subsystem **120** without any restriction or narrowing of the fluid path. In contrast, a standard luer connector (e.g., the syringe **240**) can only provide a continuous lumen for catheters of about 8 French or smaller. Any narrowing of the fluid pathway between the catheter **102** and the syringe **340** can reduce the volumetric flow rate (e.g., suction forces and fluid velocities) that can be generated when a vacuum stored in the syringe **340** is applied to the catheter **102**.

In general, the syringe **340** and the adaptor **350** can reduce the fluid resistance in the assembly **10** and therefore facilitate a more rapid pressure equalization in the assembly **10** when the fluid control device **126** is opened to apply the charged vacuum to the catheter **102**. In some embodiments, for example, when the syringe **240** (FIG. **2**) is charged with a 60 cc vacuum and the fluid control device **126** is opened, the pressure in the assembly **10** can take about 1-2 seconds to equalize. In contrast, when the syringe **340** is charged with a 60 cc vacuum and the fluid control device **126** is opened, the pressure in the assembly **10** can take less than about 1 second (e.g., about 0.5 seconds) to equalize. More specifically, Table 1 illustrates representative pressure equalization times and associated flow rates when the syringe **240** is coupled to a 20 French catheter (i.e., the catheter **102**). Table 2 illustrates representative pressure equalization times and associated flow rates when the syringe **340** and the adaptor **350** are coupled to a 20 French catheter (i.e., the catheter **102**).

TABLE 1

Pressure Equalization Time (seconds)	Flow Rate (cc/sec)
2.0	30.0
1.9	31.6
1.8	33.3
1.7	35.3
1.6	37.5
1.5	40.0
1.4	42.9
1.3	46.2

TABLE 2

Pressure Equalization Time (seconds)	Flow Rate (cc/sec)
0.9	66.7
0.8	75.0

TABLE 2-continued

Pressure Equalization Time (seconds)	Flow Rate (cc/sec)
0.7	85.7
0.6	100.0
0.5	120.0
0.4	150.0
0.3	200.0
0.2	300.0
0.1	600.0

In each instance, the syringe **340** provides for relatively faster equalization times and correspondingly greater flow rates. It is expected that the more rapid pressure equalization and flow rates provided by the syringe **340** will provide correspondingly greater suction forces at the distal portion **103***a* of the catheter **102**. That is, in general, it is expected that increasing the bore size of a syringe used to provide vacuum pressure will provide greater suction forces over a smaller period of time (e.g., will provide a larger vacuum impulse). In some embodiments, the greater suction forces can facilitate the removal of clot material from a blood vessel of a patient even where the clot material is strongly lodged or attached within the blood vessel (e.g., a chronic clot).

Moreover, as shown in FIG. **3**D, the adaptor **350** can couple the syringe **340** to the connector **128** without the need for any intervening tubing sections or additional adaptors. This arrangement can minimize the total length, volume, etc., of the components fluidly coupling the catheter **102** to the syringe **340**. It is expected that the magnitude of suction forces generated at the distal portion **103***a* of the catheter **102**—e.g., when a vacuum charged in the syringe **340** is applied to the catheter **102** by opening of the fluid control device **126**—is proportional to the length of the fluid path between the pressure source **340** and catheter **102**. Thus, operation of the assembly **10** with the syringe **340** and adaptor **350** is expected to increase the suction forces generated at the distal portion **103***a* of the catheter **102**. In some embodiments, the greater suction forces can facilitate the removal of clot material from a blood vessel of a patient even where the clot material is strongly lodged or attached within the blood vessel (e.g., a chronic clot).

FIG. **4**A is a side perspective view a pressure source **400** including the syringe **340** ("primary syringe **340**") shown in FIGS. **3**A-**3**D and a secondary syringe **460** configured in accordance with the present technology. The secondary syringe **460** can include a plunger **462** slidably positioned within a chamber or barrel **464**. The primary and secondary syringes **340**, **460** can have the same volume or different volumes. In the illustrated embodiment, a tip **463** of the secondary syringe **460** is coupled to a first one-way valve (e.g., a check valve) **470** via a coupling member **465**, such as a tube. The first one-way valve **470** is configured to fluidly connect the secondary syringe **460** to the ambient environment or another device coupled to the first one-way valve **470**. A second one-way valve (e.g., a check valve) **472** spans between and is configured to fluidly connect the primary syringe **340** to the secondary syringe **460**. More specially, in the illustrated embodiment the second one-way valve **472** is connected between the first portion **351** of the adaptor **350** and the coupling member **465**. In other embodiments, the second one-way valve **472** can couple the primary and secondary syringes **340**, **460** in different manners. For example, the second one-way valve **472** can span between and directly connect the barrels **344**,**464**. The primary and

secondary syringes **340**, **460** can be coupled or fastened together via one or more connectors **474** that fix the positions of the barrel **344**, **464** relative to one another.

In some embodiments, the second one-way valve **472** is a normally-open check valve configured to (i) permit fluid (e.g., air) flow from the primary syringe **340** and the adaptor **350** to the secondary syringe **460** and (ii) inhibit fluid flow in the opposite direction from the secondary syringe **460** into the primary syringe **340**. In some embodiments, the second one-way valve **472** has a cracking (e.g., opening) pressure of about 0 psi. In one aspect of the present technology, this arrangement maximizes the magnitude of the vacuum that can be charged within the primary syringe **340**. That is, the cracking pressure of the second one-way valve **472** does not reduce the effective vacuum within the primary syringe **340**. In other embodiments a normally-closed or other type of valve could be used for the second one-way valve **472**. However, in such embodiments the vacuum efficiency of the pressure source **400** would be reduced by the cracking pressure of the second one-way valve **472**. Similarly, the first one-way valve **470** can be a check valve configured to (i) permit fluid flow from the secondary syringe **460** to the ambient environment (or other device) and (ii) inhibit fluid flow in the opposite direction from the ambient environment into the secondary syringe **460**.

FIGS. **4**B and **4**C are enlarged schematic side views of the pressure source **400** during operation. More specifically, FIGS. **4**B and **4**C illustrate fluid flow paths through the first and second one-way valves **470**, **472** during retraction and advancement, respectively, of the plunger **462** through the barrel **464** of the secondary syringe **460**. Referring first to FIGS. **4**A and **4**B together, during retraction/withdrawal of the plunger **462**, (i) the first one-way valve **470** is closed to inhibit fluid from flowing into the secondary syringe **460** while (ii) the second one-way valve is open **472** to permit fluid to flow from the primary syringe **340**, the catheter subsystem **100** (FIG. **1**), and/or the tubing subsystem **120** (FIG. **1**) into the secondary syringe **460**. This flow path is indicated by the arrows R in FIG. **4**B. Referring to FIGS. **4**A and **4**C together, during advancement of the plunger **462**, (i) the first one-way valve **470** is open to permit fluid flow (e.g., fluid expulsion) from the secondary syringe **460** to the ambient environment (or other device) while (ii) the second one-way valve **472** is closed to inhibit fluid flow from the secondary syringe **460** into (e.g., back into) the primary syringe **360**, the catheter subsystem **100**, and/or the tubing subsystem **120**. This flow path is indicated by the arrows A in FIG. **4**C.

Referring to FIGS. **1** and **3**A-**4**C together, the pressure source **400** can be coupled to the tubing subsystem **120** by coupling the primary syringe **340** to the connector **128** (e.g., as shown in FIG. **3**D). When the pressure source is coupled to the tubing subsystem **120**, retraction of the plunger **462** of the secondary syringe **460** evacuates an evacuatable volume of the assembly **10**. For example, when the fluid control device **126** is closed, retraction of the plunger **462** of the secondary syringe **460** evacuates fluid, through the second one-way valve **472**, from (i) the primary syringe **340** (e.g., from the barrel **344**, the tip **347**, and/or the adaptor **350**) and (ii) the portion of the tubing subsystem **120** between the fluid control device **126** and the primary syringe **340**. This can enable a greater charged/stored vacuum to be generated for subsequent application to the catheter subsystem **100** for aspirating clot material. In some embodiments, the plunger **462** of the secondary syringe **460** can be withdrawn/advanced (e.g., "cycled") one or more times before withdrawing the plunger **342** of the primary syringe **340** to evacuate air from (i) the tip **347** of the primary syringe **340** and/or (ii) the portion of the tubing subsystem **120** between the fluid control device **126** and the tip **347**. In other embodiments, the plunger **462** of the secondary syringe **460** can alternatively or additionally be withdrawn after withdrawing the plunger **342** of the primary syringe **340** to further evacuate the barrel **344** of the primary syringe **340**. In some embodiments, the plunger **462** can be cycled when the fluid control device **126** is open to, for example, facilitate the removal of clot material stuck or clogged within the catheter subsystem **100**. That is, cycling the secondary syringe **460** when the fluid control device **126** is open can generate vacuum pressure and suction in the catheter **102** to aid in the aspiration/removal of clot material.

In some embodiments, the volumes of the primary and secondary syringes **340**, **460** can be selected based on one or more desired characteristics of a clot removal procedure using the pressure source **400**. For example, the secondary syringe **460** can have a larger volume than the primary syringe **340** to permit a high vacuum to be charged within the primary syringe **340** while also limiting blood loss from the patient.

In one aspect of the present technology, the pressure source **340** permits a greater vacuum to be generated without increasing the volume of the primary syringe **340**. For example, the vacuum generated by the primary syringe **340** alone is directly proportional to the volume of the primary syringe **340**. Thus, to generate a greater vacuum using the primary syringe **340** alone, the volume of the primary syringe **340** must be increased. In contrast, inclusion of the secondary syringe **460** in the pressure source **400** and the configuration of the first and second one-way valves **470**, **472** allows the (e.g., maximum) generated vacuum to be independent of the volume of the primary syringe **340**. Therefore, for example, the generated vacuum can be increased without correspondingly increasing the volume of blood withdrawn from the patient when applying the vacuum to the catheter subsystem **100**.

In some embodiments, (e.g., as described in greater detail below with reference to FIG. **19**), the primary syringe **340** of the pressure source **400** can be replaced with a simple pressure vessel or other volume, such as a canister, barrel, tube, etc. In such embodiments, a vacuum can be generated in the canister simply by cycling the secondary syringe **460** one or more times. In some embodiments, the secondary syringe **460** can comprise a pump or vacuum source other than a syringe. Likewise, the secondary syringe **460** or other vacuum source can be fluidly coupled to the primary syringe **340** in other manners (e.g., via a different arrangement of check valves) to produce the same or similar flow patterns as shown in FIGS. **4**B and **4**C. Moreover, in some embodiments the first and second one-way valves **470**, **472** can be other types of flow control devices that are mechanically activated/deactivated (e.g., opened and closed) rather than passively operated via pressure differentials within the pressure source **400**. For example, the flow control devices **470**, **472** can be mechanically coupled to the plunger **462** of the secondary syringe **460** such that cycling the plunger **462** activates/deactivates the flow control devices **470**, **472** to operate the pressure source **400** in the manner illustrated in FIGS. **4**B and **4**C.

FIG. **5** is a side cross-sectional view of a pressure source **540** comprising an automatic release syringe ("syringe **540**") configured in accordance with the present technology. In general, the syringe **540** is configured to automatically apply a charged vacuum of a selected volume to the catheter subsystem **100** without requiring the actuation of an inter-

vening fluid control device, such as the fluid control device **126** shown in FIG. **1**. The syringe **540** can have some features generally similar to the features of the syringes **240**, **340** described in detail above with reference to FIGS. **2** and **3**A-**3**D. For example, the syringe **540** includes a first plunger **542** slidably positioned within a chamber or barrel **544**. The first plunger **542** further includes a first seal **543** that engages an interior surface of the barrel **544** such that a vacuum is formed within the barrel **544** as the first plunger **542** is withdrawn through the barrel **544**. Likewise, referring to both FIGS. **1** and **5** together, the syringe **540** includes a tip **547** (e.g., a Toomey tip) for coupling the syringe **540** to the tubing subsystem **120** (e.g., via a Toomey tip adaptor) and defining a bore **549**. In some embodiments, the bore **549** has a relatively large diameter selected to provide rapid pressure equalization in the assembly **10** after a vacuum stored in the syringe **540** is released.

The first plunger **542** can further include (i) a grip portion **541** configured to be engaged by a user for retracting the first plunger **542** and (ii) a lumen **581** extending lengthwise therethrough. In the illustrated embodiment, a plunger assembly **582** is slidably positioned within and extends through the lumen **581** of the first plunger **542**. The plunger assembly **582** includes (i) a second plunger **583** and (ii) a release member **584** slidably and/or rotatably positioned within a lumen **585** of the second plunger **583**. The release member **584** includes an engagement member **586** configured to engage the grip portion **541** of the first plunger **542** when the first plunger **542** is withdrawn from the barrel **544**. The second plunger **583** includes a second seal **587** configured to engage and seal an interior surface of the bore **549** of the syringe **540** to enable a vacuum to be formed in the barrel **544** as the first plunger **542** is withdrawn through the barrel **544**. That is, the second seal **587** can seal (e.g., fluidly disconnect) the barrel **544** of the syringe from the tubing subsystem **120** and the catheter subsystem **100**. In some embodiments, the syringe **540** can further include an O-ring **579** or other suitable component for sealing an interface between the first and second plungers **542**, **582** to maintain the vacuum formed within the barrel **544**, while also permitting the first plunger **542** to move (e.g., translate) relative to the second plunger **583**.

The plunger assembly **582** further includes a locking mechanism (not shown) configured to permit/inhibit the release member **584** from moving longitudinally relative to the second plunger **583**. In some embodiments, for example, rotation of the release member **584** in a first direction relative to the second plunger **583** can lock the two components in position, while rotation of the release member **584** in a second direction relative to the second plunger **583** can unlock the two components so that the release member **584** can be withdrawn or pushed into the lumen **585** of the second plunger **583**. In other embodiments, the release member **584** and the second plunger **583** can be integrally formed or permanently locked together.

The plunger assembly **582** enables (i) a user of the syringe **540** to select a desired volume for a vacuum to be formed in the syringe **540** and (ii) the automatic release or application of a generated vacuum via opening (e.g., unplugging) of the bore **549**. Specifically, during operation of the syringe **540**, a user can first unlock the release member **584** and slide the release member **584** to a position corresponding to a desired vacuum volume. For example, the release member **584** can have tick marks **588** or other indicia along its length that correspond to a volume of the syringe **540** (e.g., a vacuum chamber volume). After selecting a desired volume, the user can lock the release member **584** relative to the second plunger **583** (e.g., by rotating the release member **584**) to inhibit relative movement of the two components. After locking the release member **584**, the user can grasp the grip portion **541** to retract the first plunger **542** relative to the barrel **544** and the plunger assembly **582** to generate a vacuum within the barrel **544** between the first and second seals **543**, **587**. When the first plunger **542** has been retracted to the desired volume, the grip portion **541** engages the engagement member **586** of the release member **584** such that further retraction of the first plunger **542** simultaneously retracts the plunger assembly **582**. As the plunger assembly **582** is retracted, the second seal **587** of the second plunger **583** is pulled out of the bore **549**, thereby releasing the vacuum stored in the barrel **544**. In this manner, the syringe **540** provides for the automatic release of charged vacuum pressure at a specified volume and with a single retraction of the first plunger **542**. Put differently, the syringe **540** has a built-in fluid control device and thus eliminates the need for a separate fluid control device **126** and/or an additional step for opening the fluid control device **126**.

FIG. **6** is a top perspective view of a pressure source **640** comprising a syringe ("syringe **640**") configured in accordance with the present technology. The syringe **640** can include some features generally similar to the features of the syringes **240**, **340**, and **540** described in detail above with reference to FIGS. **2**-**3**D and **5**. For example, the syringe **640** includes a plunger **642** slidably positioned within a barrel **644**, and a tip **647** (e.g., a large-bore tip). In the illustrated embodiment, the syringe **640** further includes a lever or handle **690** operably coupled to the plunger **642**. The handle **690** provides mechanical leverage for withdrawing the plunger **642** to create a vacuum within the barrel **644**. More specifically, the handle **690** can be coupled to a crossbar **691** that rotates relative to the plunger **642** via actuation (e.g., rotation) of the handle **690**. The crossbar **691** can be coupled to a gear (obscured in FIG. **6**) configured to engage a track **692** on the plunger **642**. Accordingly, rotation of the handle **690** in a first direction retracts the plunger **642** relative to the barrel **644** to charge a vacuum in the barrel **644**. And, rotation of the handle **690** in a second (e.g., opposite) direction advances the plunger **642** into the barrel **644** to, for example, expel fluid, material, etc., from the barrel **644**.

In one aspect of the present technology, the handle **690** provides additional mechanical leverage relative to a standard syringe, and can thus reduce the force (e.g., strain, energy, etc.) required by a user of the syringe **640** to form a vacuum in the syringe **640**. Therefore, use of the syringe **640** can reduce the time needed to remove clot material with the assembly **10**. In some embodiments, the syringe **640** can have a volume greater than 60 cc (e.g., greater than 80 cc, greater than 100 cc, greater than 120 cc, greater than 140 cc, etc.). In a particular embodiment, for example, the syringe **640** can have a volume of about 140 cc. With such large volumes, it may be difficult for some users to manually retract the plunger **642** without the additional mechanical leverage provided by the handle **690**. Thus, the syringe **640** can enable the use of larger volume syringes that can generate correspondingly greater suction forces in the catheter subsystem **100**.

Referring again to FIG. **1**, it is expected that less tortuous (e.g., more linear) fluid paths between the pressure source **140** and the catheter subsystem **100** will produce greater suction forces and corresponding fluid velocities at the distal portion **103***a* of the catheter **102** when stored vacuum pressure is applied to the catheter subsystem **100**. Accordingly, in some embodiments the side port **108** of the valve **106** can be formed to have an angle A that is less than about

90°, less than about 75°, less than about 60°, less than about 45°, less than about 30°, less than about 15° etc. Reducing the relative angle between the side port **108** and the lumen **109** of the valve **106** (and thus the lumen **104** of the catheter **102**) reduces the tortuosity of the fluid path between the pressure source **140** and the catheter **102**. Moreover, in some embodiments, the pressure source **140** can be coupled to the proximal portion **107***b* of the valve **106** instead of or in addition to the side port **108** to provide a more linear fluid path between the pressure source **140** and the catheter **102**. For example, FIG. **24** is an enlarged isometric view of the assembly **10** showing the pressure source **340** coupled directly to the proximal portion **107***b* of the valve rather than to the connector **128** of the tubing subsystem **120** and the side port **108** of the valve **106**. Although the pressure source **340** is illustrated in FIG. **24**, any of the pressure sources described in detail above with reference to FIGS. **2-6** can be configured to be coupled to the proximal portion **107***b* of the valve **106** rather than the side port **108**. In other embodiments, the side port **108** can be omitted and the valve **106** and the tubing subsystem **120** can be coupled to the catheter **102** via a Y-connector. For example, FIG. **25** is an enlarged isometric view of the assembly **10** showing the valve **106** and the tubing subsystem **120** coupled to the catheter **102** via a Y-connector **2590**. In yet other embodiments, the tubing system **120** is linearly coupled to the catheter **102**, and the valve **106** protrudes at an angle from the catheter **102**.

In some embodiments, however, a guidewire or other component is positioned within the valve **106** during the duration of a clot removal procedure (e.g., for delivering interventional devices to a treatment site within a patient). Accordingly, in some embodiments, to facilitate coupling of the pressure source **140** to the proximal portion **107***b* of the valve **106**—even when a guidewire is inserted therethrough—the pressure source **140** can be a syringe configured for over-wire delivery. For example, FIG. **7** is a side view of a pressure source **740** comprising a vacuum-pressure locking syringe ("syringe **740**") configured in accordance with the present technology for delivery and operation over a guidewire **794**. The syringe **740** can have some features generally similar to the features of the syringe **340** described in detail above with reference to FIG. **3**. For example, the syringe **740** includes a plunger **742** slidably and rotatably positioned within a barrel **744**. The barrel **744** is shown as transparent in FIG. **7** for the sake of clarity. In the illustrated embodiment, the plunger **742** includes a lumen **796** (shown in broken lines) extending longitudinally therethrough. The guidewire **794** can be inserted through the lumen **796** of the plunger **742** such that the syringe **740** can be advanced over the guidewire **794** for attachment to the proximal portion **107***b* of the valve **106**. The syringe **740** can further include one or more sealing components (e.g., valves, O-rings, etc.; not shown) for maintaining a seal between the guidewire **794** and the plunger **742** to permit build-up and storage of a vacuum in the barrel **744**.

In general, one skilled in the art will understand that the various embodiments of pressure sources disclosed herein may be combined to, for example, include multiple pressure sources or pressure sources having different components or combinations of components. For example, in some embodiments the secondary syringe **460** (FIGS. **4**A-**4**C) can be coupled via one or more one-way valves to the syringes **240**, **540**, **640** or **740** (FIGS. **2** and **5-7**, respectively) to generate additional vacuum. In some embodiments, multiple pressure sources can be coupled to the catheter **102** via the tubing subsystem **120** and/or via the valve **106**. Moreover, the individual pressure sources can be the same or different, and can be coupled to the catheter subsystem **100** via a single fluid control device, such as the fluid control device **126**, or can be coupled to the catheter subsystem **100** via separate fluid control devices. Therefore, the profile of the vacuum applied to the catheter **102** can be selected or adjusted by using multiple different pressure sources. For example, a specific vacuum profile can depend at least on (i) the individual characteristics of the multiple pressure sources (e.g., volume, bore-size, etc.), (ii) the manner in which the pressure sources are coupled to the catheter subsystem **100** (e.g., via individual valves, via the same valve, etc.), and (iii) the timing of the application or release of the vacuum of each pressure source to the catheter subsystem **100** (e.g., staggered release, simultaneous release, etc.). As one example, in some embodiments, the syringe **240** (FIG. **2**) and the syringe **340** (FIG. **3**) can both be coupled to the tubing subsystem **120** via, for example, a Y-connector. After charging both syringes **240**, **340** with vacuum pressure, opening the fluid control device **126** can simultaneously apply the combined vacuum to the catheter **102**. The larger-bored syringe **340** can provide a short but powerful impulse of vacuum pressure, while the smaller-bored syringe **240** can provide a longer and more sustained vacuum pull. This combination can apply a large, fast-acting suction force to dislodge and capture clot material in the catheter **102**, and simultaneously apply a more sustained suction force to capture more clot material.

III. Selected Embodiments of Methods of Clot Removal

FIG. **8** is a flow diagram of a process or method **800** for operating a clot removal system including the assembly **10** to remove clot material from within a blood vessel (e.g., a pulmonary blood vessel) of a human patient in accordance with the present technology. FIGS. **9**A-**9**C are side views of a proximal portion of the assembly **10**, and FIGS. **10**A and **10**B are schematic illustrations of a distal portion of the assembly **10**, during a clot removal procedure in accordance with embodiments of the present technology. In particular, FIGS. **9**A-**9**C are side views of the assembly **10** including the syringe **340** and adaptor **350** (FIGS. **3**A-**3**D), and FIGS. **10**A and **10**B are side views of the catheter **102** with the distal portion **103***a* of the catheter **102** positioned proximate to an embolism or clot material PE within a blood vessel BV (e.g., a pulmonary blood vessel). Although some features of the method **800** are described in the context of the embodiments shown in FIGS. **1**, **3**A-**3**D, and **9**A-**10**B for the sake of illustration, one skilled in the art will readily understand that the method **800** can be carried out using other suitable systems and/or devices described herein. In particular, although described in the context of the syringe **340**, the method **800** can be carried out using any one or combination of the pressure sources described in detail above with reference to FIGS. **2-7**.

At block **802**, the method **800** includes positioning the distal portion **103***a* of the catheter **102** proximate to clot material within a blood vessel of a human patient (e.g., at a treatment site). For example, in the embodiment illustrated in FIG. **10**A, a distal terminus of the distal portion **103***a* of the catheter **102** is positioned proximate to a proximal portion of the clot material PE. It is expected that reducing the distance between the distal terminus of the catheter **102** and the proximal portion of the clot material PE—without contacting the clot material PE with the catheter **102**—will maximize the suction forces on the clot material PE when the fluid control device **126** is opened. It is also expected that

reducing the distance (e.g., clearance) between the inner diameter of the blood vessel BV and the outer diameter of the catheter will maximize the suction forces on the clot material PE. However, in other embodiments, the distal terminus of the catheter **102** can be positioned at least partially within the clot material PE, or the distal terminus of the catheter **102** can be positioned distal of the clot material PE.

Access to the pulmonary vessels can be achieved through the patient's vasculature, for example, via the femoral vein. In some embodiments, the catheter subsystem **100** can include an introducer (e.g., a Y-connector with a hemostasis valve; not shown) that can be partially inserted into the femoral vein. A guidewire (not shown) can be guided into the femoral vein through the introducer and navigated through the right atrium, the tricuspid valve, the right ventricle, the pulmonary valve, and into the main pulmonary artery. Depending on the location of the embolism, the guidewire can be guided to one or more of the branches of the right pulmonary artery and/or the left pulmonary artery. In some embodiments, the guidewire can be extended entirely or partially through the clot material PE. In other embodiments, the guidewire can be extended to a location just proximal of the clot material PE. After positioning the guidewire, the catheter **102** can be placed over the guidewire and advanced (e.g., as indicated by arrow A**1**) to a position proximate to the clot material PE as illustrated in FIG. **10**A.

In some embodiments, to confirm the position of the distal portion **103***a* of the catheter **102**, a contrast agent can be injected through the catheter **102** and viewed using fluoroscopic imaging techniques, as is known in the art. In some embodiments, the valve **106** can be opened to determine the position of the distal portion **103***a* of the catheter **102** relative to the clot material PE. For example, the activation buttons **101** can be depressed to open the lumen **109** of the valve **106**. If there is substantially no back-bleeding through the valve **106**, the operator can determine that the distal portion **103***a* of the catheter **102** is fully engaged with the clot material PE. Conversely, if there is some back-bleeding through the valve **106**, the operator can determine that the distal portion **103***a* of the catheter is not fully engaged with the clot material PE. Accordingly, to locate the distal portion **103***a* of the catheter **102** just proximal of the clot material PE, the operator can (i) first determine that distal portion **103***a* of the catheter is fully engaged with the clot material PE by activating the valve **106** and detecting no back-bleeding and (ii) then reposition the catheter **102** (e.g., by withdrawing the catheter **102** proximally) and activate the valve **106** until back-bleeding is detected—thereby confirming that the distal portion **103***a* of the catheter **102** is positioned proximal of the clot material PE. In some embodiments, the valve **106** can be opened during retraction of the catheter **102** until back-bleeding is detected. In other embodiments, the valve **106** can be closed during retraction of the catheter **102**, and the catheter **106** can be retracted a set (e.g., predetermined) distance before the valve **106** is opened again. In one aspect of the present technology, determining the position of the distal portion **103***a* of the catheter **102** via activation of the valve **106** can be used when it is difficult to determine the position of the catheter **102** via radiographic techniques. In contrast, many conventional hemostasis valves cannot be activated in this manner.

In some embodiments, the guidewire can then be withdrawn while, in other embodiments, the guidewire can remain and can be used to guide other catheters (e.g., delivery catheters, additional aspiration catheters, etc.), interventional devices, etc., to the treatment site. It will be understood, however, that other access locations into the venous circulatory system of a patient are possible and consistent with the present technology. For example, the user can gain access through the jugular vein, the subclavian vein, the brachial vein, or any other vein that connects or eventually leads to the superior vena cava. Use of other vessels that are closer to the right atrium of the patient's heart can also be advantageous as it reduces the length of the instruments needed to reach the pulmonary embolism.

At block **804**, the method **800** includes coupling a pressure source (e.g., the syringe **340**) to the catheter **102** via the fluid control device **126**. For example, in the embodiment illustrated in FIG. **9**A, the tip **347** (shown in FIGS. **3**A and **3**C but obscured in FIG. **9**A) of the syringe **340** can be coupled to the connector **128** via the adaptor **350**. Once the syringe **340** is coupled to the catheter **102**, (i) opening the fluid control device **126** fluidly connects the syringe **340** to the lumen **104** of the catheter **102**, and (ii) closing the fluid control device **126** fluidly disconnects the syringe **340** from the lumen **104** of the catheter **102**. The fluid control device **126** is in an open position in FIG. **9**A.

At block **806**, the method **800** includes activating the syringe **340** to generate a vacuum while the fluid control device **126** is closed. For example, as shown in FIG. **9**B, the user can first actuate the fluid control device **126** to close the fluid control device **126**, and then retract the plunger **342** to generate a vacuum in the barrel **344** of the syringe **340**. The user can subsequently lock the plunger **342** relative to the barrel **344**, as described in detail above, to store or maintain a vacuum of known volume in the syringe **340**. In this manner, the syringe **340** can be pre-charged with a vacuum before the vacuum is applied to the catheter **102**. In contrast, many conventional aspiration techniques include activating a negative pressure source (e.g., a pump, a syringe, etc.) while the pressure source is fluidly connected to a lumen to be aspirated. In some embodiments, when the pressure source **400** with the secondary syringe **460** (FIGS. **4**A-**4**C) is used with the primary syringe **340**; the secondary syringe **460** can be cycled one or more times before or after retracting the plunger **342** to increase the vacuum pressure.

At block **808**, the method **800** includes opening the fluid control device **126** to apply the vacuum to the lumen **104** of the catheter **102**. For example, with reference to FIG. **9**C, the user can actuate (e.g., twist a handle of) the fluid control device **126** to open the fluid control device **126** and apply the vacuum stored in the syringe **340** to the catheter subsystem **100**. As shown in FIG. **10**B, application of the vacuum causes suction at the distal tip **103***a* of the catheter **102** (e.g., as indicated by arrow A**2**) that aspirates at least a portion of the clot material PE from the blood vessel BV and into the lumen **104** of the catheter **102**. In some embodiments, opening the fluid control device **126** instantaneously or nearly instantaneously generates suction at the distal portion **103***a* of the catheter **102**. In certain embodiments, application of the vacuum can generate suction for less than about 1 second (e.g., about 0.5 second), substantially less than about 1 second (e.g., about 0.3 second, about 0.1 second, etc.) less than about 2 seconds, or greater than about 2 seconds—until the pressure in the assembly **10** equalizes. In some embodiments, depending on the volume of the vacuum chamber formed in the syringe **340** and the dimensions of the catheter subsystem **100** and the tubing subsystem **120** (e.g., where the syringe **340** has a volume that is greater than or about equal to a volume of the catheter subsystem **100**), at least some of the clot material PE can be aspirated entirely through the lumen **104** of the catheter **102** and into the barrel **344** of the syringe **340**. In some such embodiments, the user

can determine whether subsequent steps for treating the clot material PE are necessary or desirable by visualizing the amount of clot material collected in the syringe **340**. FIG. **9**C, for example, illustrates the syringe **340** and the tubing subsystem **120** after the fluid control device **126** has been opened to apply the vacuum stored in the syringe **340** to the catheter **102**. In the illustrated embodiment, some of the clot material PE is visible in the syringe **340**.

In some embodiments, the fluid control device **126** or another fluid control device can be intermittently operated to provide discrete bursts of suction. For example, the fluid control device **126** can be quickly opened and closed to provide a first burst of suction (e.g., vacuum release) without fully equalizing the pressure in the assembly **10**. The fluid control device **126** can then be opened again to provide a second burst of suction, or opened and closed repeatedly to provide a desired suction pattern. In some embodiments, the assembly **10** can be specifically configured to facilitate the application of multiple bursts of suction. For example, (i) the fluid control device **126** can be spring-loaded, electronically controlled, etc., to rapidly open and close the valve, and/or (ii) the pressure source **140** can have a large vacuum chamber and/or small bore size to increase the time required for pressure in the assembly **10** to equalize (e.g., to increase a discharge time of the pressure source **140**).

Sometimes, as shown in FIG. **10**B, discharging the vacuum stored in the pressure source to aspirate the lumen **104** of the catheter **102** may not remove all of the clot material PE (or a desired amount of the clot material PE) from the blood vessel BV. That is, a single aspiration may not adequately remove the clot material PE from the blood vessel BV. In such instances, the user of the assembly **10** may wish to again apply vacuum pressure (conduct an "aspiration pass") to remove all or a portion of the remaining clot material PE in the blood vessel BV. In such instances, the pressure source can be disconnected from the tubing subsystem **120** and drained (e.g., aspirated clot removal removed) before the method **800** returns to block **802**. For example, the adaptor **350** and the syringe **340** can be decoupled from the connector **128**, and the plunger **342** can be pushed into the barrel **344** to expel the clot material PE and associated fluid from the barrel **344** via the tip **347**. With the distal portion of the catheter **102** positioned proximate to the remaining clot material PE (e.g., unmoved relative the last aspiration pass), the pressure source can then be re-coupled to the connector **128** (block **804**), primed again (block **806**), and the vacuum pressure discharged (block **808**) to aspirate all or a portion of the remaining clot material PE.

Blocks **802-808** can be repeated until a desired amount of clot material is removed from the patient or until the catheter **102** becomes clogged. In some embodiments, to check for clogging of the catheter **102**, the fluid control device **126** and/or the valve **106** can be opened to check for back bleeding. A lack of back bleeding can indicate that the catheter **102** is likely clogged. Similarly, if the barrel **344** of the syringe **340** contains mostly air and relatively little blood and clot material (e.g., less than 5-10 cc) after aspiration of the catheter **102** (block **808**), it can indicate that the catheter **102** is likely clogged. When the catheter **102** is clogged or a sufficient amount of clot material PE has been removed from the patient, the method **800** can proceed to block **810** and the catheter **102** can be removed from the patient. When the catheter **102** is clogged, the catheter **102** can be flushed and cleared prior to reentry into the patient (block **802**). In other embodiments, a different (e.g., new, unused, etc.) catheter can be inserted into the patient and positioned to remove the remaining clot material PE from the patient.

In some embodiments, rather than removing the catheter **102** from the patient if the catheter **102** is clogged, the syringe **340** can be recharged and used to apply one or more subsequent vacuum pulses to the catheter **102**. More specifically, the fluid control device **126** can be closed and the syringe **340** can be removed from the connector **128** and evacuated to remove the clot material and blood therein. Then, blocks **804-808** can be repeated to apply another pulse of vacuum to the catheter **102**. That is, rather than removing the catheter **102** after a clog is detected, the syringe **340** can be "cycled" until the vacuum force on the clot material PE overcomes the forces between the clot material PE and the catheter **102** and sucks the clot material PE into the syringe **340**. In some embodiments, when the pressure source **400** with the secondary syringe **460** (FIGS. **4**A-**4**C) is used with the primary syringe **340**, the secondary syringe **460** can be cycled one or more times to increase the vacuum in the assembly **10** (e.g., in the catheter **102**) and thus increase the suction force exerted against the clot material PE. That is, rather than removing the catheter **102** after a clog is detected, the secondary syringe **460** can be cycled until the vacuum force on the clot material PE overcomes the forces between the clot material PE and the catheter **102** and sucks the clot material PE into the syringe **340**. In some embodiments, as described in detail below with reference to FIGS. **15-16**E, a second clot removal assembly can be telescoped through the first assembly **10** to facilitate removal of the clogged clot material PE.

In some embodiments, an interventional device such as a clot removal and/or clot treatment device can be delivered to the treatment site through the catheter **102** for engaging and facilitating clot removal before and/or after application of a stored vacuum to the catheter **102**. Suitable interventional devices and associated methods are disclosed in U.S. Pat. No. 9,526,864, filed Jun. 9, 2015, and titled "RETRACTION AND ASPIRATION DEVICE FOR TREATING EMBOLISM AND ASSOCIATED SYSTEMS AND METHODS," and U.S. Pat. No. 8,784,434, filed Mar. 15, 2013, and titled "METHODS AND APPARATUS FOR TREATING EMBOLISM," both of which are incorporated herein by reference in their entireties. In some embodiments, for example, the user can first advance an interventional device to the treatment site and at least partially engage the clot material PE with the interventional device to loosen (e.g., scour) the clot material PE. Such loosening of the clot material PE can facilitate the removal of the clot material PE upon a subsequent aspiration pass. Likewise, in some embodiments, the user can use an interventional device to engage residual clot material PE (FIG. **10**B) after a first aspiration pass.

IV. Selected Embodiments of Telescoping Clot Removal Systems and Associated Methods of Clot Removal

FIG. **11** is a partially schematic side view of another clot treatment or clot removal system configured in accordance with the present technology. In the illustrated embodiment, the clot removal system includes a first aspiration assembly **20** and a second aspiration assembly **30**. The first and second aspiration assemblies **20**, **30** ("assemblies **20**, **30**") can include some features generally similar to the features of the aspiration assembly **10** described in detail above with reference to FIGS. **1-10**B. For example, the first aspiration assembly **20** includes (i) a first catheter subsystem **1000**

having a first catheter **1002** and a first valve **1006**, (ii) a first tubing subsystem **1020** having a first fluid control device **1026** (e.g., a stopcock), and (iii) a first pressure source **1040** that can be fluidly coupled to the first catheter subsystem **1000** via the first tubing subsystem **1020**. Likewise, the second aspiration assembly **30** includes (i) a second catheter subsystem **1100** having a second catheter **1102** and a second valve **1106**, (ii) a second tubing subsystem **1120** having a second fluid control device **1126** (e.g., a stopcock), and (iii) a second pressure source **1140** that can be fluidly coupled to the second catheter subsystem **1100** via the second tubing subsystem **1120**.

The first and second catheters **1002**, **1102** each comprise an elongated shaft defining a lumen **1004**, **1104** and having a distal portion **1003***a*, **1103***a*, respectively. The first and second valves **1006**, **1106** each include (i) a distal portion **1007***a*, **1107***a*, (ii) a proximal portion **1007***b*, **1107***b*, (iii) a lumen **1009**, **1109** extending therethrough, and (iv) a flow controller (obscured in FIG. **10**) in the lumen **1009**, **1109**, respectively. The first fluid control device **1026** is operable to regulate or control fluid flow between (e.g., fluidly connect or disconnect) the first pressure source **1040** and the first catheter subsystem **1000**. The second fluid control device **1126** is operable to regulate or control fluid flow between (e.g., fluidly connect or disconnect) the second pressure source **1140** and the second catheter subsystem **1100**.

In the illustrated embodiment, the second catheter **1102** has a smaller cross-sectional dimension (e.g., diameter) than the first catheter **1002** so that the second catheter **1102** can be inserted through the first valve **1006** and into the lumen **1004** of the first catheter **1002**. In some embodiments, the second catheter **1102** can be telescoped through the lumen **1004** of the first catheter **1002** until the distal portion **1103***a* of the second catheter **1102** extends beyond a distal terminus of the first catheter **1002**. Accordingly, the second catheter **1102** can be longer than the first catheter **1002**. In some embodiments, the second catheter **1102** can have a size of 16 French or smaller and the first catheter **1002** can have a size of 20 French or greater. The first valve **1006** can provide a hemostatic seal that inhibits fluid flow (e.g., blood flow) through the first valve **1006** and from the first catheter subsystem **1000** when the second catheter **1102** is positioned within the first catheter **1002**. In some embodiments (e.g., as described in detail below with reference to FIGS. **14**A-**14**C), a sealing member **1499** can be positioned between the first catheter **1002** and the second catheter **1102** for sealing the lumen **1004** of the first catheter **1002** when the second catheter **1102** is advanced distally past the sealing member.

In some embodiments, the first and second pressure sources **1040**, **1140** ("pressure sources **1040**, **1140**") are separate sources each configured to generate and store a vacuum for subsequent application to the first and second catheter subsystems **1000**, **1100**, respectively, as described in detail above with reference to FIGS. **1**-**10**B. In other embodiments, one or both of the pressure sources **1040**, **1140** can be configured to provide sustained negative pressure rather than a charge or burst of stored vacuum pressure. In yet other embodiments, one of the pressures sources **1040**, **1140** can be omitted, or the pressure sources **1040**, **1140** can be fluidly coupled and/or integrally formed.

FIG. **12** is a flow diagram of a process or method **1280** for operating a clot removal system including the assemblies **20** and **30** to remove clot material from within a blood vessel (e.g., a pulmonary blood vessel) of a human patient in accordance with the present technology. FIGS. **13**A-**13**C are schematic illustrations of a distal portion of the assemblies **20**, **30** during a clot removal procedure in accordance with the present technology. FIGS. **14**A-**14**C are schematic side views of a distal portion of the assemblies **20**, **30** during a clot removal procedure and including an optional sealing member in accordance with the present technology. Although some features of the method **1280** are described in the context of the embodiments shown in FIGS. **11** and **13**A-**14**C for the sake of illustration, one skilled in the art will readily understand that the method **1280** can be carried out using other suitable systems and/or devices.

At block **1282**, the method **1280** includes intravascularly positioning the first catheter **1002** within a human patient. FIG. **13**A, for example, illustrates the first catheter **1002** after it has been advanced (e.g., as indicated by arrow A**1**) to a position within a blood vessel BV (e.g., a pulmonary blood vessel). More specifically, the first catheter **1002** can be advanced within the blood vessel BV until the distal portion **1003***a* of the first catheter **1002** is positioned proximal to clot material PE within the blood vessel BV. In some embodiments, the position of the distal portion **1003***a* of the first catheter **1002** relative to the clot material PE can be determined by activating the first valve **1006** and determining whether there is back-bleeding through the first valve **1006**, as described in detail above. In the illustrated embodiment, the clot material PE is located within a branch (e.g., a reduced diameter portion) of the blood vessel BV. In some embodiments, access to the blood vessel BV can be achieved using an introducer and guidewire as described in detail above with reference to FIG. **8**.

At block **1284**, the method **1280** includes advancing the second catheter **1102** through the first catheter **1002** until the distal portion **1103***a* of the second catheter **1102** is positioned proximate to the clot material PE within the blood vessel BV (e.g., at a treatment site). To advance the second catheter **1102** through the first catheter **1002**, the user can first insert the distal portion **1103***a* of the second catheter **1102** through the first valve **1006** before advancing the second catheter **1102** (e.g., as indicated by the arrow A**1**) through the lumen **1004** of the first catheter **1002**. In some embodiments, the first valve **1006** can be actuated (e.g., by depressing one or more buttons) to open the lumen **1009** of the first valve **1006** so that the second catheter **1102** can be inserted therethrough. In some embodiments, the position of the distal portion **1103***a* of the second catheter **1102** relative to the clot material PE can be determined by activating the second valve **1106** and determining whether there is back-bleeding through the second valve **1106**, as described in detail above. In other embodiments, the (smaller) second catheter **1102** can be intravascularly positioned proximate to the clot material PE before intravascularly positioning the (larger) first catheter **1002**. In such embodiments, the second catheter **1102** can act as a guide or rail for guiding the advancement of the first catheter **1002** to the treatment site.

FIG. **13**A illustrates the second catheter **1102** after it has been advanced through the first catheter **1002** and past a distal terminus of the first catheter **1002** to position a distal terminus of the second catheter **1102** proximate to a proximal portion of the clot material PE. In other embodiments, the distal terminus of the second catheter **1102** can be positioned at least partially within the clot material PE, or the distal terminus of the second catheter **1102** can be positioned distal of the clot material PE. In one aspect of the present technology, because the second catheter **1102** has a smaller cross-sectional dimension than the first catheter **1002**, the second catheter **1102** can be advanced to narrower (e.g., more distal) treatment sites within the blood vessel BV. In the embodiment illustrated in FIG. **13**A, for example, the

first catheter **1002** may be too large to be positioned within the branch of the blood vessel BV, while the second catheter **1102** can be positioned within the branch proximate to or within the clot material PE.

At block **1286**, the method **1280** includes coupling the second pressure source **1140** to the second catheter **1102** via the second fluid control device **1126**. For example, any one or combination of the pressure sources described in detail above with reference to FIGS. **2-7** can be coupled to the second catheter **1102** via the second tubing subsystem **1120**. Once the second pressure source **1140** is coupled to the second catheter **1102**, (i) opening of the second fluid control device **1126** fluidly connects the second pressure source **1140** to the lumen **1104** of the second catheter **1102**, and (ii) closing of the second fluid control device **1126** fluidly disconnects the second pressure source **1140** from the lumen **1104** of the second catheter **1102**. In some embodiments, the method **1280** can further include coupling the first pressure source **1040** to the first catheter **1002** (e.g., via the first tubing subsystem **1020**).

At block **1288**, the method **1280** includes activating the second pressure source **1140** to generate a vacuum while the second fluid control device **1126** is closed. In particular, the second pressure source **1140** can be activated to build-up or pre-charge a vacuum for subsequent application to the second catheter **1102**. In some embodiments, the first pressure source **1040** can also be activated to generate and store a vacuum for subsequent application to the first catheter **1002**.

At block **1290**, the method **1280** includes opening the second fluid control device **1126** to apply the vacuum stored in second pressure source **1140** to the lumen **1104** of the second catheter **1102**. As shown in FIG. **13**B, application of the vacuum causes suction (e.g., as indicated by arrow A**2**) that aspirates at least a portion of the clot material PE from the blood vessel BV and into the lumen **1104** of the second catheter **1102**. In some embodiments, opening the second fluid control device **1126** instantaneously or nearly instantaneously generates suction at the distal portion **1103***a* of the second catheter **1102**. In one aspect of the present technology, pre-charging or storing the vacuum before applying the vacuum to the lumen **1104** of the second catheter **1102** is expected to generate greater suction forces (and corresponding fluid flow velocities) at and/or near the distal portion **1103***a* of the second catheter **1102** compared to simply activating the second pressure source **1140** while it is fluidly connected to the second catheter **1102**.

In some embodiments, where the first pressure source **1040** is also activated to generate and store a vacuum (e.g., at block **1288**), the method **1280** can further comprise opening the first fluid control device **1026** to generate suction at the distal portion **1003***a* of the first catheter **1002**. One skilled in the art will understand that the suction profile in the blood vessel BV can be selected or modified based on the characteristics of the pressure sources **1040**, **1140** (e.g., volume, bore size, etc.) and the timing of the opening of the first and second fluid control devices **1026**, **1126**. For example, the first fluid control device **1026** can be opened at the same time as the second fluid control device **1126** to generate a combined and relatively large suction force in the blood vessel BV. In other embodiments, the first fluid control device **1026** can be opened after the second fluid control device **1126** to generate staggered or stepped suction forces in the blood vessel BV. For example, the first fluid control device **1026** can be opened after the second fluid control device **1126** to aspirate any of the clot material PE (i) remaining in the blood vessel BV after aspiration of the second catheter **1102** and/or (ii) stuck to or extending from the second catheter **1102**. In other embodiments, the first pressure source **1040** can be a pump or other source for providing sustained negative pressure—rather than a built-up charge of negative pressure—and thus can generate sustained (e.g., constant) suction at the distal portion **1003***a* of the first catheter **1002**. In some such embodiments, the first fluid control device **1026** can remain open during the clot removal procedure to provide sustained suction throughout the procedure.

In some embodiments, an interventional device can be delivered through the second catheter **1102** and used to engage the clot material PE before and/or after the vacuum is applied to the second catheter **1102**. Specific details of suitable interventional devices and associated methods of use are disclosed in, for example, provisional U.S. patent application Ser. No. 16/258,344, filed Jan. 25, 2019, and titled "SINGLE INSERTION DELIVERY SYSTEM FOR TREATING EMBOLISM AND ASSOCIATED SYSTEMS AND METHODS," which is incorporated herein by reference in its entirety.

At block **1292**, the method **1280** includes retracting the second catheter **1102** proximally through the first catheter **1002**. In some embodiments, multiple aspiration passes can be performed with the second catheter **1102** before retracting the second catheter **1102**. In some embodiments, as shown in FIG. **13**C, the first pressure source **1040** or another pressure source coupled to the first catheter **1002** can be activated to generate suction (e.g., as indicated by arrow A**3**) at the distal portion **1003***a* of the first catheter **1002** during retraction of the second catheter **1102**. The suction can be constant or provided in one or more bursts, as described in detail above. In some embodiments, the second catheter **1102** can be fully withdrawn from the patient and disposed of or cleaned (e.g., flushed with a sterile liquid) for reuse.

Sometimes, the clot material PE is not fully pulled into the second catheter **1102** when the vacuum is applied to the second catheter **1102** (block **1290**) and can therefore stick to or dangle from the distal portion **1103***a* of the second catheter **1102**. FIG. **14**A, for example, is an enlarged view of the distal portion of the assemblies **20**, **30** shown in FIG. **13**C and illustrating a portion of the clot material PE stuck to or dangling from the distal portion **1103***a* of the second catheter **1102**. In the illustrated embodiment, an optional seal **1499** is disposed between the first and second catheters **1002**, **1102** to facilitate the removal of such dangling clot material PE. More specifically, the seal **1499** (shown in cross-section) can be disposed between an outer surface of the second catheter **1102** and an inner surface of the first catheter **1002**. The seal **1499** can be an O-ring, grommet, or other suitable component that fluidly disconnects the lumen **1004** of the first catheter **1002** from the blood vessel BV when the second catheter **1102** is positioned therethrough (e.g., when the distal terminus of the second catheter **1102** is positioned distally of the seal **1499**).

FIGS. **14**B and **14**C are enlarged views of the distal portion of the assemblies **20**, **30** and illustrating further retraction of the second catheter **1102** (and the dangling clot material PE) into the lumen **1004** of the first catheter **1002**. In some embodiments, the first pressure source **1040** can be activated to charge a vacuum in the lumen **1004** of the first catheter **1002**. For example, after the second catheter **1102** is advanced through the first catheter **1002** and past the seal **1499** (e.g., block **1284**)—thereby sealing the lumen **1004** of the first catheter **1002**—the operator can open the first fluid control device **1026** and activate the first pressure source **1040** to build up the vacuum in the lumen **1004** of the first

catheter **1002**. Referring to FIG. **14**C, when the distal terminus of the second catheter **1102** is retracted proximally past the seal **1499**, the lumen **1004** of the first catheter **1002** becomes fluidly connected to the blood vessel BV and the vacuum is instantaneously or nearly instantaneously released to generate suction (e.g., as indicated by arrows A**4**). In the illustrated embodiment, the suction acts to separate or otherwise dislodge the clot material PE from the second catheter **1102** and pull the clot material PE proximally through the lumen **1004** of the first catheter **1002**. In this manner, a second burst of suction is automatically applied via the first catheter **1002** during retraction of the second catheter **1102**. In one aspect of the present technology, the user does not need to take any additional step to release the vacuum stored in the first catheter **1002**—as release is automatically triggered by retraction of the second catheter **1102**.

At block **1294**, the user can determine whether it is necessary or desirable to redeploy the second catheter **1102** or another catheter through the first catheter **1002** in order to remove any residual clot material PE that was not removed during the first aspiration pass and/or any clot material located elsewhere in the blood vessel BV (e.g., to initiate a second aspiration pass). In some embodiments, the operator can visualize the amount of clot material PE collected in the first pressure source **1040** and/or the second pressure source **1140** to at least partially determine whether another aspiration pass is needed. In other embodiments, the operator can rely on imaging (e.g., fluoroscopic imaging) of the blood vessel BV or other techniques known in the art to determine whether an additional aspiration pass is necessary or desirable.

If another pass is not needed (e.g., the clot material PE was adequately removed), the user can elect to fully withdraw the assemblies **20**, **30** from the patient at block **1296**. If clot material PE remains in the vessel, the method can return to block **1284**. In particular, the same second catheter **1102** can be cleaned (e.g., flushed with saline) and advanced again through the first catheter **1002** until the distal portion **1103***a* of the second catheter **1102** is positioned proximate to the remaining clot material PE within the blood vessel BV. In some embodiments, a new second catheter **1102** can be used for each pass to reduce the likelihood of contamination (e.g., reintroduction of clot material PE). In some embodiments, the first catheter **1002** can be aspirated (e.g., via the first pressure source **1040**) prior to redeployment of the second catheter **1102** to, for example, remove any clot material PE that may be in the first catheter **1002** to inhibit its reintroduction into the blood vessel BV as the second catheter **1102** is advanced therethrough during another pass. Once the desired amount of clot material PE has been removed from the patient, the assemblies **20**, **30** may be fully withdrawn from the patient (block **1294**).

In one aspect of the present technology, the method **1280** provides for an aspiration catheter to be deployed multiple times without requiring that the first catheter **1002** be removed after each deployment. Accordingly, the present technology allows for only a single insertion of a guide catheter during a procedure including multiple passes to remove clot material—increasing the speed of the procedure and reducing trauma to the patient since the guide catheter does not need to be reintroduced (e.g., advanced through the vasculature and past the heart) before each pass. Moreover, in certain embodiments, the present technology can enable the first catheter **1002** to be relocated to an alternate treatment site within the patient without removing the first catheter **1002** from the patient and, therefore, without reintroducing the first catheter **1002** through the heart. For example, the first catheter **1002** can be relocated to another treatment site within the lungs including a treatment site in the opposite lung. More specifically, (i) a dilator can be reintroduced into the first catheter **1002**, (ii) the first catheter **1002** can be withdrawn into the main pulmonary artery, (iii) a guidewire can be redirected to the new treatment site, (iv) the first catheter **1002** can be advanced over the guidewire to the new treatment site, and (v) the dilator can be removed.

FIG. **15** is a flow diagram of another process or method **1580** for operating a clot removal system including the assemblies **20**, **30** (FIG. **1**) to remove clot material from within a blood vessel (e.g., a pulmonary blood vessel) of a human patient in accordance with the present technology. FIG. **16**A is an enlarged side view of a distal portion of the first assembly **20**, and FIGS. **16**B-**16**E are side views of a distal portion of the assemblies **20**, **30** during a clot removal procedure in which clot material clogs the first assembly **20** in accordance with the present technology. Although some features of the method **1580** are described in the context of the embodiments shown in FIGS. **11** and **16**A-**16**E for the sake of illustration, one skilled in the art will readily understand that the method **1580** can be carried out using other suitable systems and/or devices.

Some features of the method **1580** are generally similar to those of the methods **880** and/or **1280** described in detail above with reference to FIGS. **8** and **12**, respectively. For example, at block **1582** the method includes intravascularly positioning the first catheter **1002** of the first assembly **20** within a human patient. At block **1584**, the method **1580** includes coupling the first pressure source **1040** to the first catheter **1002** via the first fluid control device **1026**. For example, any one or combination of the pressure sources described in detail above with reference to FIGS. **2**-**7** can be coupled to the second catheter **1002** via the first tubing subsystem **1020**. At block **1586**, the method **1580** includes activating the first pressure source **1040** to generate a vacuum while the first fluid control device **1026** is closed. In particular, the first pressure source **1040** can be activated to build-up or pre-charge a vacuum for subsequent application to the first catheter **1002**. At block **1588**, the method **1580** includes opening the first fluid control device **1026** to apply the vacuum stored in the first pressure source **1040** to the lumen **1004** of the first catheter **1002**. As described in detail above, opening the first fluid control device **1026** instantaneously or nearly instantaneously generates suction at the distal portion **1003***a* of the first catheter **1002**.

Sometimes, however, clot material is not fully pulled into the first catheter **1002** and/or clogs the first catheter **1002** when the vacuum is applied to the first catheter **1002** (block **1588**). FIG. **16**A, for example, is an enlarged view of the distal portion of the first assembly **20** illustrating a portion of clot material PE that extends beyond from the distal portion **1003***a* of the first catheter **1002** and blocks/clogs the lumen **1004** of the first catheter **1002**. As such, a portion of the clot material PE is not within the first catheter **1002**. Accordingly, at block **1590**, the method **1580** can include determining whether the first catheter **1002** is clogged. In some embodiments, the operator can determine that the first catheter **1002** is clogged based on the vacuum chamber of the first pressure source **1040** containing little to no clot material PE and blood. For example, since the clot material PE clogs the first catheter **1002**, the vacuum chamber of the first pressure source **1040** cavitates when the first fluid control device **1026** is opened. If the first catheter **1002** is not clogged, the method **1580** can proceed to block **1598** and the first catheter **1002** can be withdrawn from the patient or the

operator can perform another aspiration pass (e.g., as described in detail above with reference to blocks **808** and **810** of the method **800** shown in FIG. **8**).

If the first catheter **1002** is clogged, the method **1580** can proceed to block **1592** which includes advancing the second catheter **1102** through the first catheter **1002** until the distal portion **1103***a* of the second catheter **1102** is positioned in or proximate to the clogging clot material PE. For example, FIG. **16**B illustrates the second catheter **1102** after it has been advanced to a position within the first catheter **1002** in which the distal terminus of the second catheter **1102** is at or proximate to the clogging clot material PE. To advance the second catheter **1102** through the first catheter **1002**, the user can first insert the distal portion **1103***a* of the second catheter **1102** through the first valve **1006** (FIG. **11**) before advancing the second catheter **1102** through the lumen **1004** of the first catheter **1002**.

At block **1594**, the method **1580** includes activating the second pressure source **1140** (FIG. **11**) coupled to the second catheter **1102**. More specifically, the second pressure source **1140** (e.g., any one or combination of the pressure sources described in detail above with reference to FIGS. **2-7**) can be coupled to the second catheter **1102** via the second fluid control device **1126** (FIG. **11**), and the second pressure source **1140** can be activated to build-up or pre-charge a vacuum while the second fluid control device **1126** is closed. The second fluid control device **1126** can then be actuated to apply the vacuum stored in the second pressure source **1140** to the lumen **1104** of the second catheter **1102**. In other embodiments, the second pressure source **1140** can simply provide a sustained vacuum rather than an instantaneous release of vacuum. That is, in some embodiments the second pressure source **1140** is not pre-charged with a vacuum.

Applying the vacuum to second catheter **1102** can aspirate at least a portion of the clogging clot material PE into the second catheter **1102** and/or suck the clot material PE against the distal terminus of the second catheter **1102**. FIG. **16**C, for example, illustrates a portion of the clot material PE stuck to or extending from the distal portion **1103***a* of the second catheter **1102** after aspirating the second catheter **1102**. In the embodiment illustrated in FIG. **16**C, the added vacuum pressure generated through the second catheter **1102** is still not enough to break apart the clot material PE such that it can be fully aspirated through the first and/or second catheters **1002**, **1102**. That is, the clot material PE clogs the lumen **1004** of the first catheter **1002**. In other embodiments, the added vacuum pressure from the second pressure source **1140** is sufficient to break apart the clot material PE such that it is aspirated into, for example, the vacuum chambers of the first and/or second pressure sources **1040**, **1140**.

At block **1596**, the method can include retracting the second catheter **1102** and the clot material PE through the lumen **1004** of the first catheter **1002**. For example, FIG. **16**D illustrates retracting the second catheter **1102**, which in turn retracts the attached clot material PE, through the lumen **1004** of the first catheter **1002**. In some embodiments, the second catheter **1102** and clot material PE can be fully withdrawn through the first catheter **1002**. In other embodiments, retracting the clot material PE through the first catheter **1002** causes the clot material PE to break apart and be aspirated into the vacuum chambers of the first and/or second pressure sources **1040**, **1140**. FIG. **16**E, for example, illustrates the clot material PE breaking apart as the vacuum of the first and/or second pressure sources **1040**, **1140** is instantaneously or nearly instantaneously released to suck the clot material PE proximally (e.g., as indicated by arrows A**5**).

At block **1598**, the first and second catheters **1002**, **1102** can be withdrawn from the patient or the operator can perform another aspiration pass using one or both of the first and second catheters **1002**, **1102**.

In one aspect of the present technology, the method **1580** removes clot material even when a first aspiration pass clogs the first catheter **1002**. More particularly, the second catheter **1102** can be used to remove clogged clot material PE without requiring the first catheter **1002** and the clogged clot material PE to be withdrawn through the blood vessel BV.

V. Additional Selected Embodiments of Clot Removal Systems and Associated Methods of Clot Removal

From the foregoing, it will be appreciated that specific embodiments of the present technology have been described herein for purposes of illustration, but that various modifications may be made without deviating from the scope of the present technology. For example, in many of the embodiments described above, stored vacuum pressure can be used to aspirate or suck clot material from a blood vessel and into a catheter without the need to engage an interventional device with the clot material. However, one skilled in the art will understand that the aspiration devices and techniques disclosed herein can be used in conjunction with any suitable interventional device and/or during a clot removal procedure utilizing an interventional device. In some embodiments, for example, a clot removal system can be configured to apply stored vacuum pressure to a guide catheter to generate a burst of suction while an interventional device is retracted into and/or through the guide catheter.

FIG. **17**, for example, is a partially schematic view of a clot removal system **1700** ("system **1700**") configured in accordance with the present technology. The system **1700** includes some features generally similar to the features of the clot removal system described in detail above with reference to FIG. **1**. For example, the system **1700** includes a catheter or sheath **1702** comprising an elongated shaft, and a valve **1706** coupled to a proximal portion of the sheath **1702**. The valve **1706** has a side port **1708** that fluidly couples a lumen of the sheath **1702** to a tubing subsystem **1720** and a pressure source **1740** (shown schematically). A fluid control device **1726** (e.g., a stopcock or clamp; shown schematically) is operable to fluidly disconnect or connect the pressure source **1740** from/to the lumen of the sheath **1702**. The pressure source **1740** can be any suitable pressure source for generating and storing vacuum pressure, as described in detail above.

In the illustrated embodiment, the system **1700** further includes (i) a self-expanding (e.g., mesh) funnel **1780** coupled to a proximal portion of the sheath **1702** and (ii) an interventional device (e.g., a thrombus extraction device) **1790**. In the illustrated embodiment, the interventional device **1790** includes an expandable coring element (e.g., a first portion) **1792** coupled to an expandable cylindrical element (e.g., a second portion) **1794**. In some embodiments, the interventional device **1790** is configured to self-expand from a compressed delivery state to an expanded deployed state. The interventional device **1790** is shown in the deployed state in FIG. **17**. An elongated shaft **1782** and/or one or more shafts positioned within the elongated shaft **1782** (e.g., an intermediate shaft **1884** and an inner shaft **1886** as shown in FIGS. **18**E and **18**F, respectively) are coupled to the interventional device **1790** and configured to retract, advance, and/or manipulate (e.g., move between the

delivery and deployed states) the interventional device **1790**. In some embodiments, the system **1700** can be generally the same as or similar to any of the clot removal systems disclosed in U.S. Patent Application Publication No. 2018/0193043, filed Apr. 26, 2017, and titled "DEVICES AND METHODS FOR TREATING VASCULAR OCCLUSION," which is incorporated herein by reference in its entirety.

In the illustrated embodiment, the system **1700** is shown intravascularly positioned within a blood vessel BV of a human patient and proximate to clot material DV (e.g., a deep vein thrombus) within the blood vessel BV. Specifically, FIG. **17** shows the system **1700** after (i) advancing the sheath **1702** to a position proximate to a proximal portion **1785***b* of the clot material DV, (ii) deploying the funnel **1780**, (iii) deploying the interventional device **1790** from the sheath **1702** (e.g., by advancing the interventional device **1790** through the valve **1706** and the sheath **1702** to a position distal of a distal portion **1785***a* of the clot material DV), and (iv) expanding the interventional device **1790** from the compressed delivery state to the deployed state.

FIGS. **18**A-**18**H are enlarged views of a distal portion of the system **1700** during a clot removal procedure in accordance with the present technology. In general, FIGS. **18**A-**18**H illustrate the proximal retraction of the interventional device **1790** through the clot material DV to capture at least a portion of the clot material DV, and the subsequent joint retraction of the interventional device **1790** and the captured clot material DV into the funnel **1780** and the sheath **1702**. In one aspect of the present technology, charged vacuum pressure generated in the vacuum source **1740** can be applied to the sheath **1702** at one or more times during the illustrated process to generate suction for aspirating the captured clot material DV through the sheath **1702** and/or to inhibit clogging of the sheath **1702**.

Referring first to FIG. **18**A, proximal retraction of the interventional device **1790** causes the coring element **1792** to separate and/or core the distal end portion **1785***a* of the clot material DV from the walls W of the blood vessel BV. As shown in FIG. **18**B, continued proximal retraction of the interventional device **1790** through the clot material DV causes the cylindrical element **1794** to capture the distal end portion **1785***a* of the clot material therein. FIGS. **18**C-**18**E illustrate further proximal retraction of the interventional device **1790** which causes further separation, coring, and/or capture of the clot material DV. As seen in FIG. **18**E, the proximal end portion **1785***b* of the clot material DV is cored and captured as the interventional device **1790** is proximally retracted toward the funnel **1780** and the sheath **1702**. As further shown in FIG. **18**E, a first radiopaque marker **1887***a* can be positioned on a distal end portion of the inner shaft **1884** and a second radiopaque marker **1887***b* can be positioned on a distal end portion of the sheath **1702**.

In some embodiments, as shown in FIG. **18**F, the interventional device **1790** can be proximally retracted until a portion of the coring element **1792** is contained (e.g., positioned) within the funnel **1780**. More specifically, the interventional device **1790** can be proximally retracted until a mouth **1895** of the coring element **1792** is contained within the funnel **1780**. In some embodiments, the containment of the mouth **1895** within the funnel **1780** can be fluoroscopically verified by visualization of the radiopaque markers **1887** (FIG. **18**E). In some embodiments, for example, the mouth **1895** can be determined as wholly contained within the funnel **1780** via fluoroscopic monitoring based on the alignment of the distal end portion of the inner shaft **1884** (e.g., the first radiopaque marker **1885***a*) relative to the distal end portion of the sheath **1702** (e.g., the second radiopaque marker **1885***b*). In some embodiments, when the mouth **1895** of the coring element **1792** is positioned within the funnel **1780**, the interventional device **1790** can be moved or transformed from the expanded deployed state to the compressed delivery state to compress and secure the clot material DV captured by the interventional device **1790**. In some embodiments, for example, the intermediate shaft **1884** can be unlocked and/or decoupled from the inner shaft **1886** (e.g., via user actuation of a plunger or other device) such that the inner shaft **1886** can be advanced distally relative to the intermediate shaft **1884** to collapse or compress the interventional device **1790**.

After the interventional device **1790** has been collapsed, the interventional device **1790** can be proximally retracted through the funnel **1780** and into the sheath **1702** as depicted in FIG. **18**G. As shown in FIG. **18**H, the interventional device **1790** can continue to be proximally retracted until the interventional device **1790** and the captured clot material DV are fully contained within the sheath **1702**. In some embodiments, the interventional device **1790** and the captured clot material DV can then be withdrawn through the sheath **1702** and the valve **1706** (FIG. **17**), and from the patient's body.

In some embodiments, the collapse of the interventional device **1790** and/or the retraction of the interventional device **1790** into the funnel **1780** and/or the sheath **1702** can result in one or more portions of the clot material DV breaking away from the clot material DV contained in the interventional device **1790**. For example, all or a portion of the captured clot material DV can be extruded through pores of the (e.g., mesh) cylindrical element **1794** as the interventional device **1790** collapses. In some embodiments, any such clot material can be captured by the funnel **1780**. Referring to FIG. **17**, in some embodiments, the pressure source **1740** can be activated to charge a vacuum, and the fluid control device **1726** can subsequently be opened to apply the charged vacuum to the sheath **1702** (as described in detail above). The vacuum can be applied to the sheath **1702** at any point during retraction of the interventional device **1790**. As shown in FIGS. **18**G and **18**H, application of the vacuum can generate instantaneous or nearly instantaneous suction (e.g., as indicated by arrows A**6**) at the distal end portion the sheath **1702** that can aspirate the extruded portions and/or other portions of the clot material DV into and/or through the sheath **1702**. In particular, the generated suction can aspirate some or all of the clot material DV captured by the funnel **1780**. Moreover, in some embodiments, application of a vacuum from the pressure source **1740** can facilitate smooth retraction of the captured clot material DV through the sheath **1702**. For example, a burst of suction generated by application of the vacuum can help inhibit clogging of the sheath **1702**, and/or help resolve (e.g., break apart) a clog formed in the sheath **1702** during retraction.

VI. Selected Embodiments of Clot Removal Systems Having Filters and Associated Methods of Clot Removal

The systems and methods for clot removal described herein can include applying a pre-charged vacuum to generate suction for aspirating clot removal from the blood vessel of a patient. In one aspect of the present technology, aspiration of the clot material also aspirates blood from the patient. It can be advantageous to reintroduce the aspirated blood to the patient to lessen the trauma to the patient—

especially where the removal procedure may comprise multiple aspiration passes that can together withdraw a significant amount of blood. However, the aspirated blood is often mixed with clot material and is therefore not suitable for reintroduction into the patient. FIGS. **19-20**E illustrate various devices for filtering aspirated blood from removed clot material to reintroduce the aspirated blood into the patient without reintroducing a significant amount of clot material.

For example, FIG. **19** is a perspective side view of a pressure source **1900** for filtering blood from aspirated clot material during a clot removal procedure configured in accordance with the present technology. The pressure source **1900** is generally similar to the pressure source **400** described in detail above with reference to FIGS. **4**A-**4**C. For example, the pressure source **1900** includes the secondary syringe **460** ("syringe **460**") and the first and second one-way valves **470** and **472**. However, the secondary syringe **460** is coupled to a canister **1940** rather than the primary syringe **340** (FIGS. **4**A-**4**C). The canister **1940** includes a tip (obscured) coupled to the adaptor **350** and is configured to be removably positioned within the connector **128** of the tubing subsystem **120** (FIG. **1**) to fluidly couple the canister **1940** to the tubing subsystem **120**. Because the canister **1940** does not include a plunger or other component for changing a volume thereof, the syringe **460** is the only vacuum source for evacuating the canister **1940** (e.g., via repeated cycling of the secondary syringe **460**).

In the illustrated embodiment, the canister **1940** further includes a filter **1942**. The canister **1940** is shown as transparent in FIG. **19** for the sake of clarity. The filter **1942** is coupled to and/or covers a removable end cap **1944** having a blood separation port **1946**. In operation, when blood and clot material are aspirated into the canister **1940** (e.g., via any of the methods described in detail above), the filter **1942** separates the blood from the clot material within the canister **1940**. The filtered blood can be removed via the blood separation port **1946**. For example, a syringe (not shown) or other device can be fluidly coupled to the blood separation port **1946** and used to draw the blood through the filter **1942** and out of the canister **1940**. The filtered blood can then be reintroduced to the patient via, for example, the fluid control device **126** and/or the connector **128** of the tubing subsystem **120**. Once the blood is removed from the canister **1940**, the end cap **1944** can be removed from the canister **1940** (e.g., by unscrewing the end cap **1944** from the body of the canister **1940**) for removing the captured clot material. In some embodiments, the filter **1942** is attached to the end cap **1944** such that removing the end cap **1944** removes the filter **1942** and permits clot material to be dumped, scooped, or otherwise removed from the canister **1940**.

FIGS. **20**A-**20**E illustrate a filter device **2050** for filtering blood from aspirated clot material during a clot removal procedure configured in accordance with the present technology. The filter device **2050** is configured as an in-line filter for use with, for example, one or more of the pressure sources described in detail above with reference to FIGS. **2**-**7**. For example, FIG. **20**A is a partially-exploded side view of the filter device **2050** and the pressure source **340** (FIGS. **3**A-**3**D). In the illustrated embodiment, the filter device **2050** comprises a filter portion **2060** that is removably positionable within a barrel portion **2070**. In the illustrated embodiment, the barrel portion **2070** includes a barrel **2072** that defines a chamber **2074**, and a large bore tip **2076** configured to fluidly couple the chamber **2074** to external components, such as the tubing subsystem **120** (e.g., as shown in FIG. **20**C). The filter portion **2060** includes a seal **2062** configured to engage (i) an interior surface of the barrel **2072** when the filter portion **2060** is positioned within the chamber **2074** of the barrel portion **2070** and (ii) an exterior surface of the syringe **340** (e.g., an exterior surface of the barrel **344**) when the syringe **340** is inserted into the filter device **2050**. In other embodiments, the filter portion **2060** can be permanently attached to or integrally formed with the barrel portion **2070**. The filter portion **2060** further includes a filter (e.g., a mesh) **2064** configured (e.g., sized and shaped) to inhibit clot material from passing therethrough. In some embodiments, the filter **2064** can be configured to inhibit clots larger than about 100 μm (e.g., larger than about 110 μm) from passing therethrough.

FIG. **20**B is a perspective side view of the syringe **340** coupled to the filter device **2050**. The barrel **2072** of the barrel portion **2070** is shown as transparent in FIG. **20**B (and FIGS. **20**C-**20**E) for the sake of clarity. In the illustrated embodiment, the seal **2062** is positioned between the exterior surface of the barrel **344** of the syringe **340** and the interior surface of the barrel **2072** of the barrel portion **2070**. The filter **2064** is positioned around (e.g., covers) the tip **347** of the syringe **340** to inhibit clot material from entering the barrel **344** of the syringe **340** during operation.

FIG. **20**C is a side view of the filter device **2050** and syringe **340** coupled to the tubing subsystem **120** of the assembly **10**. More specifically, the tip **2076** can be inserted into the connector **128** of the tubing subsystem **120** as described in detail above. When the filter device **2050** and the syringe **340** are coupled to the tubing subsystem **120**, the filter device **2050** is positioned in-line (e.g., in series) with the syringe **340**. In the embodiment illustrated in FIG. **20**C, the plunger **342** of the syringe **340** has been withdrawn to generate negative pressure in the combined volume of the barrels **2072** and **344**. As described in detail above, opening the fluid control device **126** nearly instantaneously applies the negative pressure to the catheter **102** to generate suction therein. When clot material and blood are aspirated through the catheter **102** and the tubing subsystem **120**, the filter portion **2060** inhibits the clot material from entering the barrel **344** of the syringe **340**. Thus, aspirated blood is collected in the barrel **344** of the syringe **340** while the aspirated clot material is collected in the barrel **2072** of the barrel portion **2070** of the filter device **2050**. In this manner, clot material and blood can be separated during aspiration.

In one aspect of the present technology, separating the blood from the clot material such that the blood is within the syringe **340** permits the blood to be easily reintroduced to the patient. For example, FIGS. **20**D and **20**E are side views of the syringe **340** coupled to the tubing subsystem **120** of the assembly **10** for reintroducing blood to a patient. In some embodiments, as shown in FIG. **20**D, the syringe **340** can be decoupled from the filter device **2050** and directly coupled to the connector **128**. With the fluid control device **126** in an open position, the blood can then be reintroduced to the patient through the assembly **10** by depressing the plunger **342** of the syringe **340**. In some embodiments, as shown in FIG. **20**E, the syringe **340** can be decoupled from the filter device **2050** and directly coupled to a port on the fluid control device **126**. With the fluid control device **126** in a closed position, the blood can then be reintroduced to the patient through the assembly **10** by depressing the plunger **342** of the syringe **340**. Referring to FIGS. **20**A-**20**E together, after or before reintroducing filtered blood to the patient, the filter portion **2060** of the filter device **2050** can be removed from the barrel portion **2070** so that the collected clot material can be removed and the filter device **2050** cleaned. In some embodiments, the filter device **2050** and a coupled pressure source can be used to filter blood

from clot material after—as opposed to during—an aspiration pass. For example, the filter device **2050** and coupled pressure source could be used to withdraw blood and clot material collected in the canister **1940** of the pressure source **1900** (e.g., where the canister **1940** does not include the filter **1942**).

FIGS. **21**A and **21**B illustrate a filter device **2150** for filtering blood from aspirated clot material during a clot removal procedure configured in accordance with the present technology. The filter device **2150** is configured for use with, for example, one or more of the pressure sources described in detail above with reference to FIGS. **2-7**. For example, FIG. **21**A is a partially-exploded side view of the filter device **2150** and the pressure source **340** (FIGS. **3**A-**3**D). In the illustrated embodiment, the filter device **2150** includes a housing **2152** defining a chamber **2154**, a filter **2156** configured to be positioned within the housing **2152**, and a cap assembly **2160** configured to be releasably coupled to the housing **2152** (e.g., via a threaded connection, snap-fit connection, etc.). In some embodiments, the filter **2156** can have a porosity of between about 50-200 microns.

The housing **2152** can include a port **2153** configured to be removably, fluidly coupled to the pressure source **340** via a tubing subsystem **2120**. In the illustrated embodiment, the tubing subsystem **2120** includes tubing sections **2124** (individually labeled as a first tubing section **2124***a* and a second tubing section **2124***b*), a fluid control device **2126** (e.g., a valve, stop cock, clamp, etc.), and a connector **2128** (e.g., a large bore connector) for fluidly coupling the tubing subsystem **2120** to the pressure source **340**. In the illustrated embodiment, the cap assembly **2160** includes a fluid connector **2162** (e.g., a standard Luer or large bore connector) configured to be connected to a receiving/reinfusion syringe **2170** via, for example, a tubing section **2164**. In some embodiments, the cap assembly **2160** can include a valve (e.g., a one-way valve, a check valve, etc.) that provides for one-way fluid flow through filter assembly **2150**.

In operation, during a clot removal procedure, the pressure source **340** can be decoupled from the connector **128** (FIG. **1**) after an aspiration pass and when the pressure source **340** is full of blood and clot material. After connecting the filter device **2150** to the receiving syringe **2170**, the pressure source **340** can be coupled to the filter device **2150**. For example, FIG. **21**B is a perspective side view of the filter device **2150** coupled to (i) the pressure source **340** via the tubing subsystem **2120** and (ii) the reinfusion syringe **2170** via the tubing section **2164**. More specifically, referring to FIGS. **21**A and **21**B together, the tip **347** of the pressure source **340** can be coupled to the connector **2128** of the tubing subsystem **2120**, and a tip **2172** of the reinfusion syringe **2170** can be coupled to the tubing section **2164**. In other embodiments, the filter device **2150** can be coupled to the pressure source **340** and/or the reinfusion syringe **2170** in other manners (e.g., directly such that the all or part of the tubing subsystem **120** is omitted). Alternatively, the filter device **2150** can be directly attached to the side port **108** (FIG. **1**), an IV line (not shown), or another suitable connection point for reintroducing blood to the patient.

After coupling the pressure source **340** to the filter device **2150**, the fluid control device **2128** can be opened to fluidly connect the pressure source **340** to the filter device **2150**. Then, the operator can depress the plunger **342** of the pressure source **340** to drive the blood and clot material from the pressure source **340** into and/or through the filter device **2150**. The filter **2156** of the filter device **2150** filters the blood from the clot material such that the blood flows into the reinfusion syringe **2170** and the clot material remains in the chamber **2154** of the filter device **2150**. For example, as shown in FIG. **21**B, blood B fills the reinfusion syringe **2170** and clot material PE remains within the chamber **2154** of the filter device **2150** after depressing the plunger **342** of the pressure source **340** in the direction indicated by the arrow H.

Next, the reinfusion syringe **2170** can be decoupled from the filter device **2150** so that the blood B can be reintroduced to the patient. For example, the reinfusion syringe **2170** could be directly coupled to a port on the fluid control device **126** (FIG. **1**). The cap assembly **2160** can be decoupled from the housing **2152** of the filter device **2150** to, for example, permit an operator to remove the clot material PE collected in the housing **2152** and thereby clean and prepare the filter device **2150** for another use.

FIG. **22** is a partially-exploded side view of a filter device **2250** for filtering blood from aspirated clot material during a clot removal procedure configured in accordance with the present technology. The filter device **2250** is configured for use with, for example, one or more of the pressure sources described in detail above with reference to FIGS. **2-7**. In general, the filter device **2250** is generally similar to the filter device **2150** described in detail with reference to FIGS. **21**A and **21**B. For example, the filter device **2250** includes a housing **2252** defining a chamber **2254**, a filter **2256** configured to be positioned within the housing **2252**, and a cap assembly **2260** configured to be releasably coupled to the housing **2252**. However, in the illustrated embodiment the filter device **2250** includes a port **2253** that is directly connected to a connector **2228** configured to be coupled to a pressure source (e.g., the pressure source **340** shown in FIGS. **3**A-**3**D). The cap assembly **2260** includes a fluid connector **2162** (e.g., a standard Luer or large bore connector) configured to be connected to a reinfusion syringe, a sheath, an IV line, etc., (not shown). In some embodiments, the fluid connector **2262** is angled relative to the filter **2260** and/or the housing **2252**. For example, the fluid connector **2262** is formed to have an approximately right angle in FIG. **22**. In one aspect of the present technology, this arrangement makes the filter device more ergonomic during use.

FIG. **23** is a partially-exploded side view of a filter device **2350** for filtering blood from aspirated clot material during a clot removal procedure configured in accordance with the present technology. The filter device **2350** is configured for use with, for example, one or more of the pressure sources described in detail above with reference to FIGS. **2-7**. The filter device **2350** is generally identical to the filter device **2250** described in detail with reference to FIG. **22**— including, for example, the housing **2252** ("a first housing **2252**"), the filter **2256** ("a first filter **2256**"), and the cap assembly **2260** including the fluid connector **2262** ("a first fluid connector **2262**"). However, in the illustrated embodiment a second housing **2382** and a second filter **2386** are fluidly connected to the fluid connector **2262**. The second housing **2382** includes a second fluid connector **2384** that can be fluidly connected to a reinfusion syringe, a sheath, an IV line, etc., (not shown). The second filter **2386** is configured to provide a second stage of filtration. For example, in some embodiments the first filter **2256** has a larger porosity than the second filter **2386**. For example, the first filter **2256** can have a porosity of between about 50-200 microns and the second filter **2386** can have a porosity of between about 50-170 microns.

In general, one skilled in the art will understand that the various embodiments of filter devices disclosed herein may have different components or combinations of components. For example, the filter devices **2050**,**2150**,**2250**, and/or **2350**

("the filter devices") could be utilized with any of several different pressure sources other than the syringe **340** (e.g., those shown in FIGS. **2** and **4-7**). In some embodiments, the filter devices can be formed as a component of the tubing subsystem **120** (FIG. **1**). Moreover, the filter devices can include any number of filters and/or housings to provide any number of filtration stages.

Conclusion

The above detailed descriptions of embodiments of the technology are not intended to be exhaustive or to limit the technology to the precise form disclosed above. Although specific embodiments of, and examples for, the technology are described above for illustrative purposes, various equivalent modifications are possible within the scope of the technology as those skilled in the relevant art will recognize. For example, although steps are presented in a given order, alternative embodiments may perform steps in a different order. The various embodiments described herein may also be combined to provide further embodiments.

From the foregoing, it will be appreciated that specific embodiments of the technology have been described herein for purposes of illustration, but well-known structures and functions have not been shown or described in detail to avoid unnecessarily obscuring the description of the embodiments of the technology. Where the context permits, singular or plural terms may also include the plural or singular term, respectively.

Moreover, unless the word "or" is expressly limited to mean only a single item exclusive from the other items in reference to a list of two or more items, then the use of "or" in such a list is to be interpreted as including (a) any single item in the list, (b) all of the items in the list, or (c) any combination of the items in the list. Additionally, the term "comprising" is used throughout to mean including at least the recited feature(s) such that any greater number of the same feature and/or additional types of other features are not precluded. It will also be appreciated that specific embodiments have been described herein for purposes of illustration, but that various modifications may be made without deviating from the technology. Further, while advantages associated with some embodiments of the technology have been described in the context of those embodiments, other embodiments may also exhibit such advantages, and not all embodiments need necessarily exhibit such advantages to fall within the scope of the technology. Accordingly, the disclosure and associated technology can encompass other embodiments not expressly shown or described herein.

We claim:

1. A vacuum aspiration system, comprising:
- a housing;
- a flow path extending through the housing;
- an on-off control in the flow path;
- a first catheter in fluid communication with the flow path and a connector configured to place a source of aspiration in communication with the flow path;
- a clot cannister fluidly coupled to the flow path; and
- a hemostasis valve in the housing configured to receive a second catheter and direct the second catheter through the first catheter, wherein the hemostasis valve comprises:
  - a tubular member defining a lumen configured to slidably receive the second catheter;
  - a constricting mechanism including a filament and an actuator coupled to the filament, the filament comprising a first portion extending around at least a portion of the tubular member and a second portion having a first end extending from the first portion in one direction and a second end extending from the first portion in another direction, and the actuator comprises a first member coupled to the first end of the filament and a second member couped to the second end of the filament, wherein the first member and the second member of the actuator are moveable between (a) a first position wherein the filament circumferentially constricts the lumen to create a seal and (b) a second position wherein the filament is moved to at least partially open the lumen; and
  - a biasing system configured to bias the first member and the second member to the first position.

2. The vacuum aspiration system of claim **1** wherein the tubular member is pliable.

3. The vacuum aspiration system of claim **1** wherein the first portion of the filament extends in a loop completely around the tubular member.

4. The vacuum aspiration system of claim **1** wherein the first member of the actuator comprises a first button and the second member of the actuator comprises a second button, wherein the first button and the second button are undepressed in the first position, and wherein the first button and the second button are depressed in the second position.

5. The vacuum aspiration system of claim **1** wherein, when the first member and the second member of the actuator are in the first position, the lumen of the tubular member is configured to remain constricted and sealed when a pressure differential exists between (a) a first volume outside the lumen and adjacent to a first end of the tubular member and (b) a second volume outside the central lumen and adjacent to a second end of the tubular member.

6. The vacuum aspiration system of claim **1** wherein, when the first member and the second member of the actuator are in the first position, the lumen of the tubular member is configured to remain constricted and sealed when vacuum pressure is applied to a volume outside the lumen and adjacent to either a first end or a second end of the tubular member.

7. The vacuum aspiration system of claim **1** wherein the lumen of the tubular member extends a long a first longitudinal axis, wherein the first member and the second member of the actuator are movable between the first and second positions along a second longitudinal axis, and wherein the first longitudinal axis is orthogonal to the second longitudinal axis.

8. The vacuum aspiration system of claim **1** wherein the biasing system comprises a first compression spring coupled to the first member and a second compression spring coupled to the second member.

9. The vacuum aspiration system of claim **1** wherein, in the first position, the first member and the second member of the actuator pull the filament to circumferentially constrict the tubular member such that the lumen is constricted and sealed.

10. A vacuum aspiration system, comprising:
- a housing;
- a flow path extending through the housing;
- an on-off control in the flow path;
- a first catheter in fluid communication with the flow path and a connector configured to place a source of aspiration in communication with the flow path;
- a clot cannister fluidly coupled to the flow path; and
- a hemostasis valve in the housing configured to receive a second catheter and direct the second catheter through the first catheter, wherein the hemostasis valve comprises

(a) a support;

(b) an actuator having a least a first member movably coupled to the support;

(c) a collapsible tubular sidewall defining a lumen carried by the support;

(d) a filament formed in a loop around the tubular sidewall, the filament having at least a first end portion extending away from the loop to the first member; and

(e) a first spring configured to move the first member in a direction that pulls the first end portion such that a diameter of the lumen decreases in response to reducing a diameter of the loop.

11. The vacuum aspiration system of claim **10**, further comprising a second member movably coupled to the support.

12. The vacuum aspiration system of claim **11** wherein the filament further comprises a second end portion extending away from the loop to the second member.

13. The vacuum aspiration system of claim **12** first end portion, the loop, and the second end portion are one continuous filament.

14. The vacuum aspiration system of claim **12** wherein first member and the second member are biased in a direction that places the first end portion and the second end portion under sufficient tension to reduce the diameter of the lumen and provide a seal around a device extending through the lumen.

15. The vacuum aspiration system of claim **12** wherein the first member and the second member are biased in a direction that places the first end portion and the second end portion under sufficient tension to close the lumen.

* * * * *