Trials@uspto.gov
571-272-7822

Paper 36
Date: June 9, 2026

UNITED STATES PATENT AND TRADEMARK OFFICE

BEFORE THE PATENT TRIAL AND APPEAL BOARD

IMPERATIVE CARE, INC.,
Petitioner,

v.

INARI MEDICAL, INC.,
Patent Owner.

IPR2025-00289
Patent 11,697,012 B2

Before JEFFREY N. FREDMAN, ERIC C. JESCHKE, and TIMOTHY G. MAJORS, *Administrative Patent Judges.*

MAJORS, *Administrative Patent Judge*.

JUDGMENT
Final Written Decision
Determining All Challenged Claims Unpatentable
35 U.S.C. § 318(a)

Imperative Care v. Inari Medical
IPR2025-00728
Imperative Care Ex. 1049

I. INTRODUCTION

Imperative Care, Inc. ("Petitioner") filed a Petition (Paper 1, "Pet.") requesting *inter partes* review of claims 1–15 of U.S. Patent No. 11,554,005 B2 (Ex. 1001, "the '005 patent"). Pet. 1, 20. Inari Medical, Inc. ("Patent Owner") filed a Preliminary Response (Paper 5).

We instituted trial on June 18, 2025. Paper 10 ("Inst. Dec."). During trial, Patent Owner filed a Patent Owner Response. Paper 16 ("PO Resp."). Petitioner filed a Reply (Paper 21 ("Pet. Reply")) and Patent Owner filed a Sur-reply (Paper 26 ("PO Sur-reply")). We held an oral hearing on April 16, 2026, and a transcript of that hearing is of record. Paper 35 ("Tr.").

We have jurisdiction under 35 U.S.C. § 6(b). After considering the full record through trial, we determine that Petitioner has proved by a preponderance of the evidence that the challenged claims are unpatentable. *See* 35 U.S.C. § 316(e). Our reasoning is explained below, and we issue this Final Written Decision under 35 U.S.C. § 318(a).

II. BACKGROUND

A. Real Parties-in-Interest

Petitioner identifies itself as the real party-in-interest. Pet. 109. Patent Owner identifies itself as the real party-in-interest and states that it is a wholly-owned subsidiary of Stryker Corporation. Paper 7, 2.

B. Related Matters

The parties identify several related IPR proceedings. Pet. 109; Paper 7, 2–4. The related matters include the following: IPR2024-01157 (Final Written Decision entered Jan. 16, 2026, finding all challenged claims unpatentable; notice of appeal filed); IPR2024-01257 (institution denied); IPR2025-00156 (Final Written Decision entered Apr. 7, 2026 (Ex. 1050), finding all challenged claims unpatentable); IPR2025-00728 (instituted and

pending); IPR2025-00989 (instituted and pending); IPR2025-01021 (instituted and pending) IPR2025-01025 (instituted and pending); IPR2025-01264 (instituted and pending); IPR2025-01562 (instituted and pending).

The parties also identify the following lawsuit involving assertion of the '005 patent (and other related and unrelated patents): *Inari Medical Inc. v. Imperative Care, Inc.*, No. 24-cv-3117 (N.D. Cal.). Pet. 109; Paper 7, 2.[1] That district court lawsuit is now stayed. Ex. 1049.[2]

C. The '005 Patent (Ex. 1001)

The '005 patent is titled "System For Treating Embolism and Associated Devices and Methods." Ex. 1001, code (54). The patent issued January 17, 2023, from an application filed July 14, 2022, and claims the priority benefit of two provisional applications filed August 13, 2018. *Id.* at codes (22), (45), (60).

According to the '005 patent, "[t]he present technology relates generally to systems, methods, and devices for the intravascular treatment of emboli and/or thrombi within a blood vessel of a human patient." *Id.* at 1:17–20. Figure 20C (reproduced below) is a side view of an illustrative clot removal system of the '005 patent, with annotations added by Petitioner.

---

[1] Patent Owner further states that *Inari Medical, Inc. v. Inquis Medical, Inc.*, No. 24-1023-CFC (D. Del.) "may involve related issues." Paper 7, 2.

[2] If there is any perceived inconsistency between our determinations in this Decision and the district court's order on a motion for preliminary injunction on a related patent, we point the reader to our discussion on that issue in related proceedings, which we adopt here. Ex. 1050, 3–4 ("[T]here is no unexplained inconsistency . . . ."); IPR2024-01157, Paper 35 at 3–4; *see also* Ex. 1037 (order denying Patent Owner's motion for preliminary injunction).

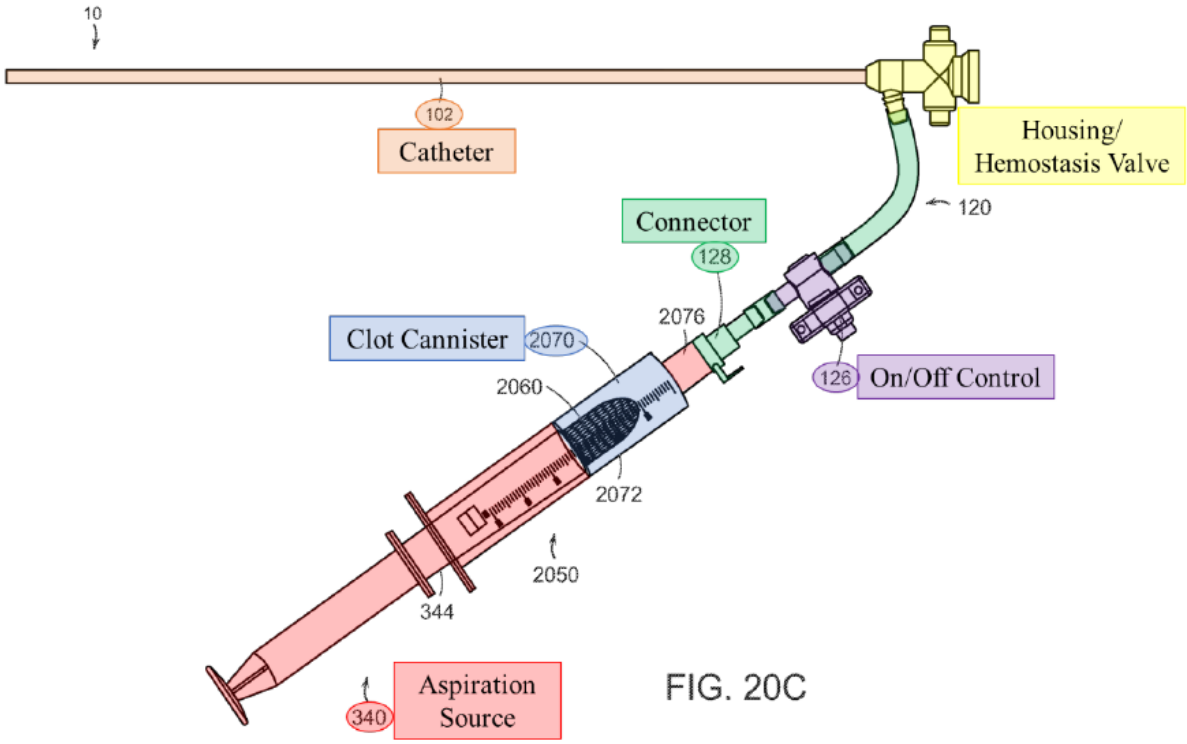

FIG. 20C

Pet. 2 (citing Ex. 1001, Fig. 20C). As shown in the figure above, aspiration assembly 10 includes catheter 102 (orange), syringe 340 (red and annotated as "Aspiration Source"), filter 2060 within barrel 2070 (blue and annotated "Clot Cannister"), connector 128 (green), fluid control device 126 (purple and annotated "On/Off Control"), and a hemostasis valve (unnumbered in Fig. 20C, yellow, and annotated "Housing/Hemostasis Valve"). Ex. 1001, 31:51–32:43; *see also id.* at Fig. 1, 5:18–6:16 (describing features of related Fig. 1, including hemostasis valve 106).

With respect to hemostasis valves, the '005 patent states, *inter alia*:

> In some embodiments, the valve 106 can be a valve of the type disclosed in U.S. patent application Ser. No. 16/117,519, filed Aug. 30, 2018, and titled "HEMOSTASIS VALVES AND METHODS OF USE," which is incorporated herein by reference in its entirety.

Id. at 5:49–54. Further disclosures about the hemostasis valves are found in U.S. Application No. 16/117,519 ("the '519 Application" (Ex. 1017)), which we discuss below.[3] For this Decision, we treat those disclosures as having been incorporated by reference into the '005 patent.

The '519 Application explains that, "[i]n minimally invasive surgery, small incisions are created through a blood vessel [into] which one or several catheters are inserted." Ex. 1017 ¶ 3. "These catheters are moved to a position proximate to tissue, nerves, or other body structures targeted by the surgery, and then tools for performing the procedure are inserted through the lumens of some or all of these catheters." *Id.* "To minimize blood loss, prevent delivery of air into the vasculature, and to facilitate maintenance of sterility within the patient's body . . . , these catheters are equipped with hemostasis valves." *Id.* ¶ 4.

The '519 Application discloses that "[t]he [hemostasis] valve can include a tubular [elongate] member that can be constricted, collapsed, and/or sealed by one or several tensioning mechanisms." Ex. 1017 ¶ 6. Further, "[t]he tensioning mechanism can include at least one filament that extends around at least a portion of the tubular member" and such "filament

[3] The '519 Application is a parent application to the patents challenged in the 1157 and 156 IPRs. *See, e.g.*, IPR2024-01157, Ex. 1001, codes (21), (63) (indicating the '519 Application is a grandparent application to the application that issued as the challenged '011 patent).

can interact with the tubular member to constrict, collapse, and/or seal the tubular member via manipulation of the tensioning mechanism(s)." *Id.* (disclosing that such valve, by action of the tensioning mechanism and filament, "can seal around a wide range of tool sizes and shapes, as well as multiple tools of differing sizes simultaneously" passed through the tubular member). According to the '519 Application, the tensioning mechanism includes an actuator coupled to the filament, which actuator controls movement of the filament from a first position (where the central lumen is constricted and sealed) to a second position (where the central lumen is un-constricted and open). *Id.* ¶ 9. Moreover, an actuator can be biased toward the first or second positions. *Id.*

We reproduce below the '519 Application's Figure 2, including Petitioner's annotations and additional annotation by the Board.

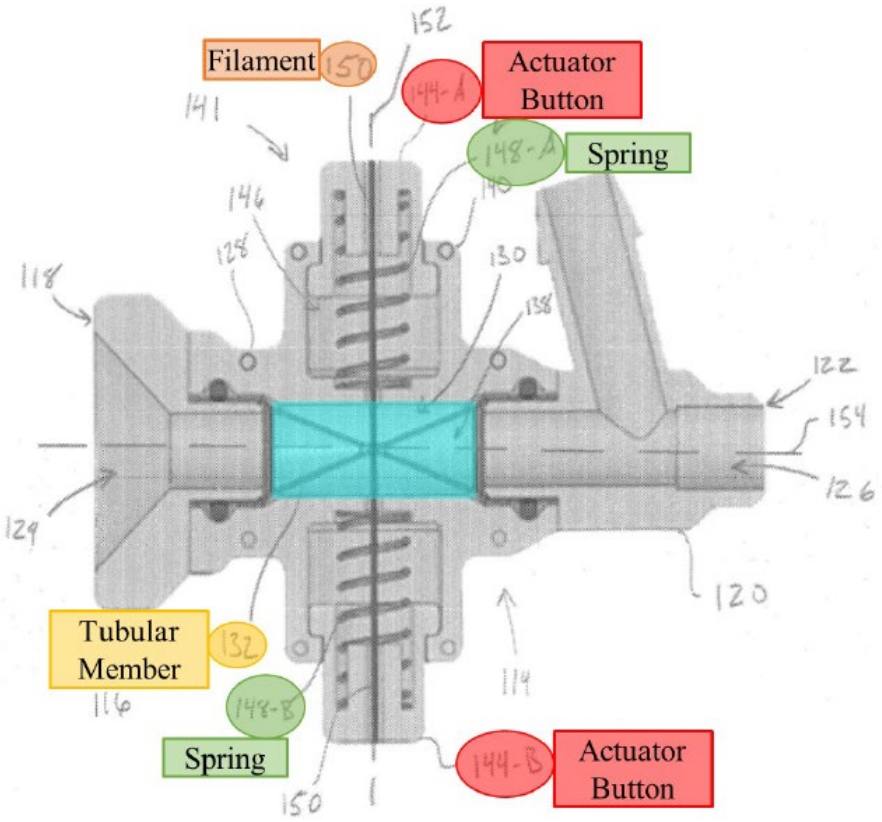

Figure 2

Pet. 3 (blue highlight added by Board); Ex. 1017, Fig. 2.[4] Figure 2, above, is a side cross-sectional view of a hemostasis valve that includes housing 128, elongate tubular member 132 (yellow) defining a central lumen 138 and having a central axis 154, constricting mechanism 141, filament 150 (orange highlights), and oppositely disposed actuator buttons 144-A and 144-B (red highlights). Ex. 1017 ¶¶ 41–45. In this embodiment, the filament is disposed around the elongate member and coupled to both actuator buttons (which are undepressed); the buttons are biased towards a first (closed) configuration by a bias feature (e.g., springs 148A, 148B (green highlights)) wherein the elongate member is collapsed and sealed in the region highlighted blue (central lumen 138) when tension is applied to the filament. *Id.* ¶¶ 44–45. Although not shown in the figure above, when the buttons are depressed, the constricting mechanism moves to a second (open) configuration where the filament is loosened, allowing expansion of the elongate member and unsealing of the central lumen. *Id.* ¶ 50, Fig. 3 (showing open configuration).

The '519 Application discloses that the "filament 150 can be arranged in a variety of configurations." Ex. 1017 ¶ 66. The filament can comprise a "single loop 604 that can extend around the elongate member 132 and/or through which the elongate member 132 can be received as shown in

[4] Patent Owner provides (as Exhibit 2004) replacement drawings submitted during the '519 Application's prosecution. Those cleaned-up drawings are substantially the same as drawings cited and annotated by the parties from the '011 and '012 patents challenged in the related 1157 and 156 IPRs, respectively. *See, e.g.*, IPR2025-00156, Paper 6 at 5 (annotated version of Fig. 2 of the '012 patent).

Figure 6." *Id.* Alternatively, the filament may comprise one or more "U-shaped section[s]" or "bight[s]" like shown in Figures 8 and 9. *Id.* ¶ 67 (disclosing "filament 150 can be configured to form a bight 800, which bight 800 can be a single bight or multiple bights" and, "[a]s used herein, a 'bight' refers to a U-shaped section between the two ends of the filament 150"). Moreover, the "filament can be made from a variety of materials including, for example, a polymer, a synthetic, and/or a metal." *Id.* ¶ 47.

Figures 6–9 of the '519 Application are reproduced below.

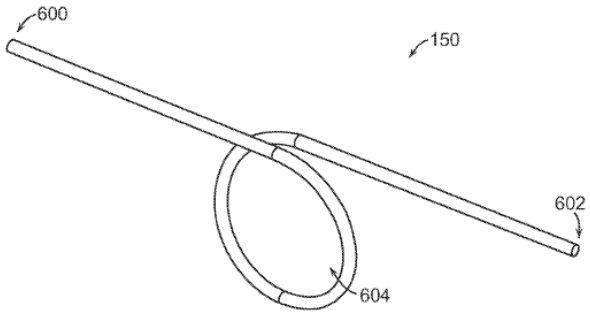

FIG. 6

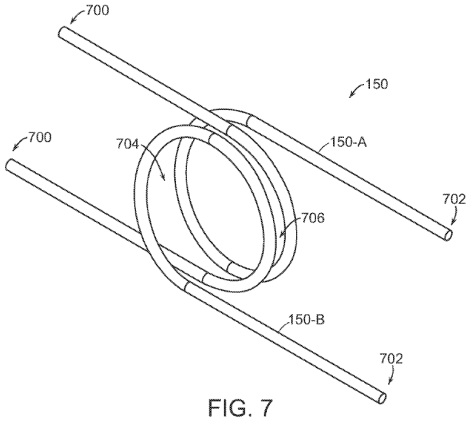

FIG. 7

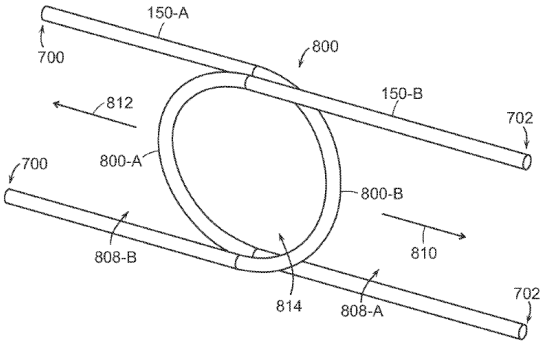

FIG. 8

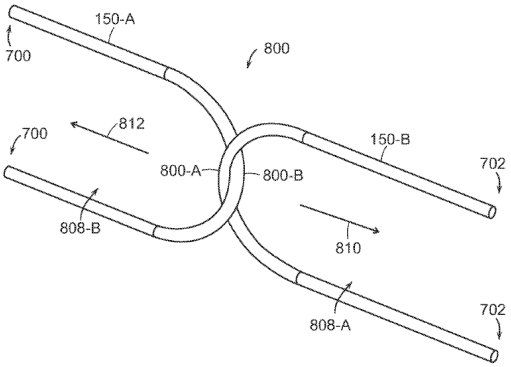

FIG. 9

Ex. 2004, Figs. 6–9. Figures 6–9 above show various filament configurations: "single loop" (Fig. 6), "multiple loops" (Fig. 7), or multiple "bights" (Figs. 8 and 9). Ex. 1017 ¶ 66 (describing "single loop 604" and "multiple loops" (704, 706) embodiments as depicted in Figs. 6 and 7, respectively), ¶ 67 ("As used herein, a 'bight' refers to a U-shaped section

between two ends of the filament 150" as depicted in Figures 8 and 9). The '519 Application discloses that "the filament 150 can comprise multiple filaments . . . as shown in Figures 7 through 9." *Id.* ¶ 65.

The '519 Application discloses that, in "loop" embodiments like Figures 6 and 7, a filament can be configured to form a "loop" (or "loops") "that can extend around the elongate member 132 [(not shown)] and/or through which the elongate member can be received." Ex. 1017 ¶ 66. Further, "a diameter or size of the loop 604, or of the loops 704, 706 can decrease when the constricting mechanism 141 is moved from the second configuration to the first configuration." *Id.*

Figures 8 and 9 above depict a filament comprising first and second interlocking "bights" 800A, 800B for receiving and extending around respective portions of an elongate member. Ex. 1017 ¶ 67. The "bights" 800A and 800B define an "encircled area 814" into which the elongate member can be received. *Id.* ¶ 69. Movement of those bights in the directions indicated by arrows 812 and 810 "decreases the size of the encircled area 814 and constricts, collapses, and/or seals the elongate member 132 extending through the encircled area." *Id.*

D. Illustrative Claims

Petitioner challenges claims 1–15. Claims 1 and 10 are the only independent claims. Those claims are reproduced below:

1. A vacuum aspiration system, comprising:
    a housing;
    a flow path extending through the housing;
    an on-off control in the flow path;
    a first catheter in fluid communication with the flow path and a connector configured to place a source of aspiration in communication with the flow path;
    a clot cannister fluidly coupled to the flow path; and

a hemostasis valve in the housing configured to receive a second catheter and direct the second catheter through the first catheter, wherein the hemostasis valve comprises:

a tubular member defining a lumen configured to slidably receive the second catheter;

a constricting mechanism including a filament and an actuator coupled to the filament, the filament comprising a first portion extending around at least a portion of the tubular member and a second portion having a first end extending from the first portion in one direction and a second end extending from the first portion in another direction, and the actuator comprises a first member coupled to the first end of the filament and a second member coupled to the second end of the filament, wherein the first member and the second member are moveable between (a) a first position wherein the filament circumferentially constricts the lumen to create a seal and (b) a second position wherein the filament is moved to at least partially open the lumen; and

a biasing system configured to bias the first member and the second member to the first position.

Ex. 1001, 35:49–36:13.

10. A vacuum aspiration system, comprising:

a housing;

a flow path extending through the housing;

an on-off control in the flow path;

a first catheter in fluid communication with the flow path and a connector configured to place a source of aspiration in communication with the flow path;

a clot cannister fluidly coupled to the flow path; and

a hemostasis valve in the housing configured to receive a second catheter and direct the second catheter through the first catheter, wherein the hemostasis valve comprises

(a) a support;

(b) an actuator having at least a first member movably coupled to the support;

(c) a collapsible tubular sidewall defining a lumen carried by the support;
(d) a filament formed in a loop around the tubular sidewall, the filament having at least a first end portion extending away from the loop to the first member; and
(e) a first spring configured to move the first member in a direction that pulls the first end portion such that the diameter of the lumen decreases in response to reducing a diameter of the loop.

Id. at 36:56–37:13.

E. Prior Art and Asserted Grounds

Petitioner asserts that claims 1–15 are unpatentable based on the following grounds:

Grounds	Claims Challenged	35 U.S.C. §[5]	Reference(s)/Basis
1	1–12, 14, 15	103	Garrison,[6] Schaffer[7]
2	1–15	103	Garrison, Schaffer, Hartley[8]

[5] The Leahy-Smith America Invents Act ("AIA"), Pub. L. No. 112–29, 125 Stat. 284, 285–88 (2011), revised 35 U.S.C. §§ 102, 103 effective March 16, 2013. Based on the uncontested assertion that August 13, 2018, is the earliest possible priority date for the '005 patent, we apply the AIA versions of §§ 102 and 103 in this Decision. Pet. 15.

[6] Garrison et al., US 2015/0173782 A1, published June 25, 2015 (Ex. 1011, ("Garrison")).

[7] Schaffer et al., US 2003/0225379 A1, published Dec. 4, 2003 (Ex. 1005 ("Schaffer")).

[8] Hartley, US 2003/0116731 A1, published June 26, 2003 (Ex. 1006 ("Hartley")).

3	1–15	103	Garrison, Schaffer, Eller[9]
4	1–3, 5, 6, 9–15	103	Garrison, Hartley, Eller

Petitioner also relies on testimony from Troy L. Thornton in support of its challenge. Exs. 1003, 1040. In response, Patent Owner relies on testimony from Paul J. Zalesky, Ph.D. Ex. 2026; Ex. 2032 (Supplemental Zalesky Declaration from IPR2025-00156).

Deposition testimony from Mr. Thornton and Dr. Zalesky is also of record. Exs. 1038, 1039, 1042 (Zalesky transcripts); Exs. 2005, 2028, 2029, 2031, 2033, 2036 (Thornton transcripts).

III. ANALYSIS

A. Legal Standards

"In an [*inter partes* review], the petitioner has the burden from the onset to show with particularity why the patent it challenges is unpatentable." *Harmonic Inc. v. Avid Tech., Inc.*, 815 F.3d 1356, 1363 (Fed. Cir. 2016) (citing 35 U.S.C. § 312(a)(3)).

A claim is unpatentable under 35 U.S.C. § 103 if the differences between the claimed invention and the prior art are such that the claimed invention as a whole would have been obvious before the effective filing date of the claimed invention[10] to a person having ordinary skill in the

[9] Eller, US 9,980,813 B2, issued May 29, 2018 (Ex. 1007 ("Eller")). Petitioner notes that Eller published October 29, 2015. Pet. 21; *see* Ex. 1007, code (65).

[10] Although *KSR* addressed pre-AIA § 103, which set the timing of the obviousness inquiry at the time the invention was made, *KSR* and other pre-AIA obviousness precedents cited herein still apply.

relevant art. *KSR Int'l Co. v. Teleflex Inc.*, 550 U.S. 398, 406 (2007). The question of obviousness is resolved on the basis of underlying factual determinations including: (1) the scope and content of the prior art; (2) any differences between the claimed subject matter and the prior art; (3) the level of ordinary skill in the art; and (4) secondary considerations (i.e., objective indicia) of nonobviousness when presented.[11] *Graham v. John Deere Co.*, 383 U.S. 1, 17–18 (1966). To show unpatentability based on a combination of teachings, "[a]n obviousness determination [also] requires finding both that a skilled artisan would have been motivated to combine the teachings of the prior art references to achieve the claimed invention, and that the skilled artisan would have had a reasonable expectation of success in doing so." *CRFD Rsch., Inc. v. Matal*, 876 F.3d 1330, 1340 (Fed. Cir. 2017) (internal quotation marks omitted).

B. Level of Ordinary Skill in the Art

Petitioner contends that the person of ordinary skill in the art ("POSA") in August 2018 "would have had an undergraduate degree in mechanical engineering or a related engineering discipline and 2–4 years of catheter design experience." Pet. 17 (citing Ex. 1003 ¶ 35).

Although Patent Owner states that it "disagrees" with Petitioner's POSA definition, Patent Owner nevertheless applies that definition in this case. PO Resp. 32–33; *see* Tr. 22:23–23:5 (Patent Owner is "not disputing" Petitioner's definition, asserting the definition "doesn't make any difference in this case").

[11] Petitioner states that it is not aware of any objective indicia of nonobviousness (Pet. 107) and Patent Owner does not provide argument about any objective indicia. *See generally* PO Resp.; Ex. 2026 ¶ 210 (indicating no opinions on secondary considerations).

We apply Petitioner's undisputed POSA definition in this Decision.[12]

C. Claim Construction

In *inter partes* review, we construe claims using the same claim construction standard used to construe claims in a civil action before the courts under 35 U.S.C. § 282(b), including construing claim language in accordance with its ordinary and customary meaning as understood by the POSA, in view of the patent's specification and considering the patent's prosecution history. 37 C.F.R. § 42.100(b). We need only construe terms where the parties dispute the terms' meanings and only to the extent needed to resolve the controversy. *Realtime Data, LLC v. Iancu*, 912 F.3d 1368, 1375 (Fed. Cir. 2019).

Petitioner proposes an express claim construction for the term "filament," which appears in each challenged claim. *See supra* Section II.D (claim 1 reciting, *inter alia*, a hemostasis valve comprising "a constricting mechanism including a *filament*" that extends around a tubular member and has end portions attached, respectively, to first and second members of an actuator, such that movement of the actuators causes the filament to "circumferentially constrict the lumen [defined by the tubular member] to create a seal"); *see also id.* (claim 10 reciting, *inter alia*, a hemostasis valve comprising "a *filament* formed in a loop around the tubular member" such that, when an end of the filament is pulled by a spring-activated actuating

[12] We adopted a slightly modified version of the POSA definition in the related 1157 and 156 IPRs. *See, e.g.*, Ex. 1050, 13–14 (requiring an undergraduate degree in mechanical engineering (or related discipline) and 2–4 years of experience related to products in the field of the invention (including, e.g., catheters and hemostasis valves)). Our determination in this Decision would not change if that alternative definition applied.

member, "a diameter of the lumen decreases in response to reducing a diameter of the loop"). Petitioner contends a "filament" means "at least 'one or more threads, lines, cords, ropes, ribbons, flat wires, sheets, or tapes.'" Pet. 17. According to Petitioner, this interpretation is supported by the intrinsic record. *Id.* at 17–18 (citing, e.g., Ex. 1017 ¶ 47).

Patent Owner counters that the claimed "filament" should be accorded its plain and ordinary meaning, which a POSA would understand as "a thin, flexible length of material formed by one or more strands of material." PO Resp. 24. Patent Owner argues its interpretation is supported by the claims and Specification, as well as the extrinsic evidence including dictionary definitions and the testimony and patent filings of Petitioner's own expert, Mr. Thornton. *Id.* at 25–32 (citing, e.g., Ex. 1017 ¶ 67 (describing action of loops formed by the filament, requiring flexibility); Ex. 2002, 467 (defining filament as "a single thread or a thin flexible threadlike object, process, or appendage"); Ex. 2005 (Thornton Tr.), 123:1–3 (testifying "in the ordinary meaning of filament, it has flexibility"); Ex. 2030 (Thornton patent), 8:7–9 (equating a "filament" to a "thread-like element"). Patent Owner argues we should reject Petitioner's interpretation because it omits any requirement that a filament be flexible. PO Resp. 24; PO Sur-reply 6–8.

The parties' core dispute about the claimed filament is whether it must be flexible. This dispute is especially relevant to Ground 1, where Petitioner relies on the U-shaped actuating members in Schaffer's valve as disclosing a filament yet, Patent Owner argues, those actuating members are "rigid" and do not satisfy the filament term. *See, e.g.*, PO Resp. 40–49. Conversely, for Grounds 2–4, which further rely on Hartley or Eller, there is no dispute that a "filament" is disclosed in both Hartley and Eller. *See, e.g.*, Pet. 49–50 (citing Hartley's "string" as the alleged filament (Ex. 1006 ¶ 31, Fig. 3

(depicting string 14)); Ex. 1006 ¶ 17 ("The flexible member may be a string, suture or band or other suitable material.")).

We have construed the "filament" term in multiple related proceedings and agreed with Patent Owner that the claimed filament requires flexibility. *See* Ex. 1050 (Final Written Decision in 156 IPR); IPR2024-01157, Paper 35 (Final Written Decision) at 15–24. Specifically, we determined that the evidence supports Patent Owner's position that "a POSA would have understood the plain and ordinary meaning of the claimed 'filament' as a flexible length of material (e.g., one or more string(s), wire(s), tape(s))." *See, e.g.*, Ex. 1050, 23. We maintain that construction in this Decision for the reasons given by Patent Owner (*see* PO Resp. 24–32; PO Sur-reply 6–8), we disagree with Petitioner's argument to the contrary (Pet. Reply 27–31), and we incorporate our analysis concerning the meaning of the filament term from the related proceedings identified above, which applies equally here.[13] Ex. 1050 (Final Written Decision in 156 IPR); IPR2024-01157, Paper 35 (Final Written Decision) at 15–24. The parties agreed at the oral hearing that there is no additional argument or evidence

[13] Although the '005 patent is not directly related to the patents at issue in the 1157 and 156 IPRs, the '519 Application that the '005 patent purports to incorporate for providing all relevant disclosures about the filament term is a parent application to the challenged patents in the 1157 and 156 IPRs (*see supra* n.3). *SightSound Techs., LLC v. Apple Inc.*, 809 F.3d 1307, 1316 (Fed. Cir. 2015) ("Where multiple patents derive from the same parent application and share many common terms, we must interpret the claims consistently across all asserted patents.") (internal quotation marks omitted). We also construed the filament term consistently in other ongoing proceedings on related patents. *See, e.g.*, Ex. 1045 (Institution Decision in the 728 IPR), 12–18; Ex. 1046 (Institution Decision in the 989 IPR), 13–21.

about the construction of a filament in this case that the Board has not already addressed in those related matters. Tr. 6:13–23, 23:19–26.

To the extent that the parties may disagree about the meaning or application of any other claim terms, we address such disagreement below when analyzing the mapping of the prior art to the claims.

D. Asserted References

Petitioner asserts, and Patent Owner does not dispute, that Schaffer, Hartley, Eller, and Garrison are each prior art under 35 U.S.C. § 102(a)(1). Pet. 20.

In applying Schaffer, Petitioner also cites certain drawings submitted during prosecution of the Schaffer application due to those drawings' improved clarity versus the versions of the drawings that appear in Schaffer as published. Ex. 1008 (drawings dated June 18, 2003, submitted during Schaffer's prosecution); Pet. 6 n.1. In this Decision, we may likewise cite the prosecution drawings in Exhibit 1008 because those drawings are clearer than the comparable drawings in Exhibit 1005.

1. Schaffer (Ex. 1005)

Schaffer is a U.S. patent application that published December 4, 2003. Ex. 1005, code (43). Schaffer is titled "Composite Stasis Valve" and describes a "valve for blocking the flow of gas or fluid with or without an instrument in place within the gas/fluid path." *Id.* at Abstr.; *see also id.* ¶¶ 2–3 (disclosing that Schaffer "relates to catheters, in particular to composite fluid-stasis valves for use with catheters" and "[f]luid stasis mechanisms are commonly used to prevent loss of fluids from the insertion site of a catheter").

An embodiment of Schaffer's fluid-stasis valve, including Petitioner's uncontested annotations, is shown below.

First Position – Actuator Buttons Undepressed

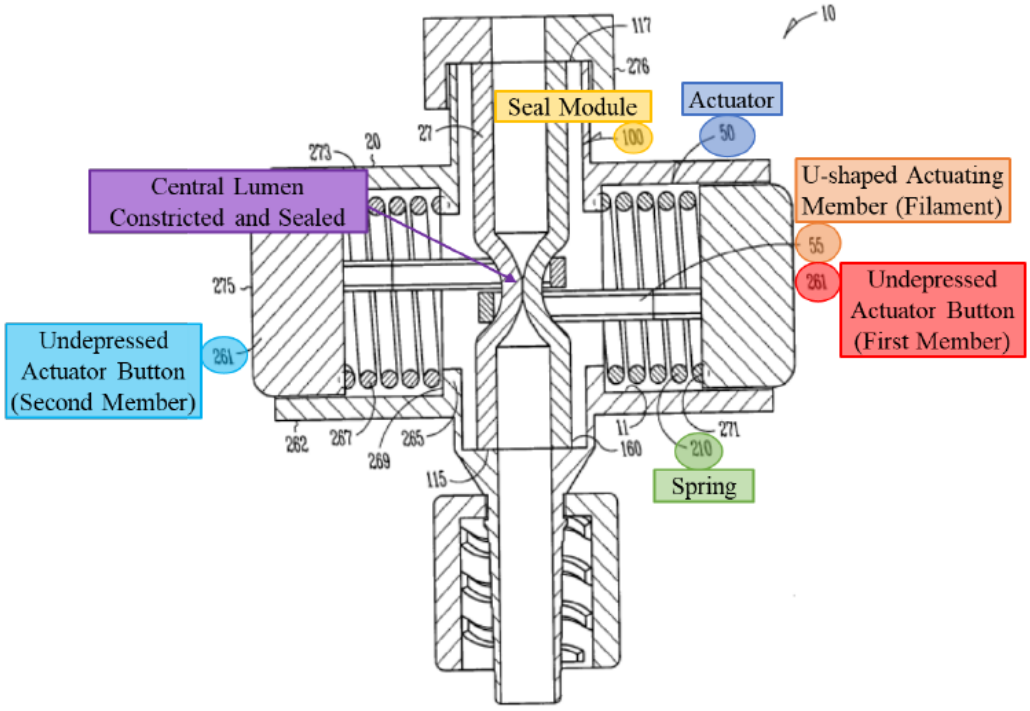

Fig. 32

Pet. 42 (Ex. 1008, Fig. 32 (annotated)); Ex. 1005, Fig. 32, ¶ 75 ("FIGS. 30–34 illustrate one embodiment of valve 10 including a seal module 100 having a lumen sized to allow the passage of fluids or gases."); Ex. 1008, 16–19 (Figs. 30–34). Schaffer's Figure 32, above, is a cross-sectional view of a stasis valve 10 in a "first position," where actuator button(s) 261 (red highlight) are undepressed, allowing seal module 100 (yellow highlight) to take on a collapsed configuration such that a valve lumen (purple highlight) is at least partially collapsed/constricted and sealed by a compressive force provided by spring(s) (green highlight), which force is applied to actuating member(s) 55 (orange highlight) and transferred to a central portion of seal module 100. Ex. 1005, Fig. 32, ¶¶ 75–77; Ex. 1008, 17. Schaffer discloses that actuator 50 (dark blue highlight) "include[s] an actuating member 55 which, in one option, is U-shaped" (orange highlight). Ex. 1005 ¶ 76; *see*

also Ex. 1008, 18 (perspective view of valve 10, showing valve with two U-shaped actuating members 55). Schaffer discloses that, in the first position, the actuating members 55 "are, in one option, disposed at least partially circumferencially [*sic*] disposed about" the seal module "depressing and at least partially collapsing a portion 108 of the containment structure 160 by a compressive force 67 (e.g., by a spring 210)." Ex. 1005 ¶ 77. Schaffer teaches that actuating members may optionally comprise aluminum or plastic. *Id.* ¶¶ 81, 82 (actuating members and buttons may, for example, be machined from aluminum).

Although not shown in Figure 32 above, when the actuator buttons of this illustrated embodiment are pressed, the stasis valve takes on a "second [open or unsealed] position." Ex. 1005 ¶ 77, Fig. 34 (showing the valve with both buttons depressed such that central portion of the valve lumen/seal module retracts to an unsealed configuration). According to Schaffer:

> In the second position, the actuators 50 are disposed away from a portion 108 of the seal module 100 by a compressive force 67 (e.g., by depressing the distal end 275 of the actuator button 261). As each actuator button 261 is depressed, each actuator 50 slides along the cylindrical interior wall 11 of the housing 20. The proximal end 273 of each actuator button 261 compresses the distal end 271 of each resilient member 267 which in turn, the proximal end 269 of each resilient member 267 compresses against the inner flange wall 265 of the housing 20. Such movement allows each engaged actuating member 55 to forcibly disengage opposing outer walls 27 of seal module 100 allowing the portion 108 of the containment structure 160 to retract to an uncollapsed configuration where gases and fluids can pass therethrough.

Id. ¶ 77, Fig. 34.

2. Hartley (Ex. 1006)

Hartley is a U.S. patent application that published June 26, 2003. Ex. 1006, code (43). Hartley is titled "Access Valve" and, in general, relates to an access valve for laparoscopic or intralumenal deployment devices. *Id.* at Abstr., code (54); *see also id.* ¶ 3 ("The invention will be discussed in . . . relation to fluid flow prevention and access valves in medical applications for instance where it is desired to seal around a catheter or other instrument . . . to prevent loss of blood or other fluid.").

Hartley's Figure 5 is reproduced below.

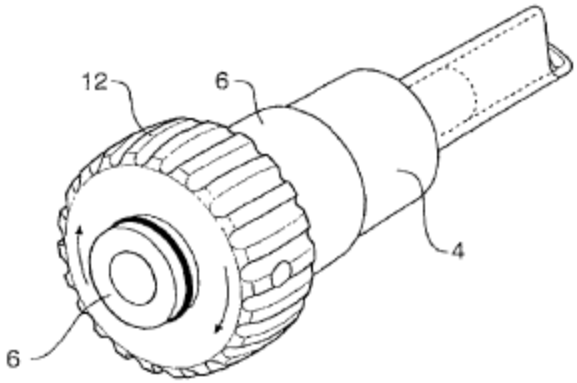

Fig 5

Ex. 1006, Fig. 5. Figure 5 above is a perspective view of an illustrative delivery catheter and constriction valve described in Hartley. *Id.* ¶ 29. The valve includes, *inter alia*, catheter body 4, cylindrical housing 6, and rotary actuator 12. *Id.* ¶ 31.

The action of Hartley's valve is more clearly seen in Figures 3 and 4, reproduced side-by-side below.

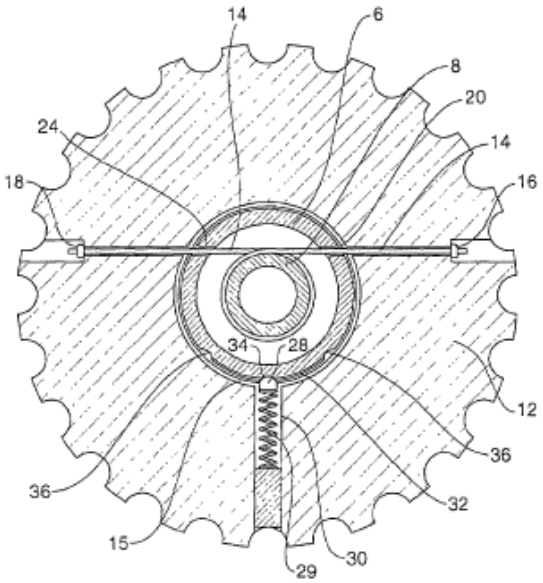

Fig 3

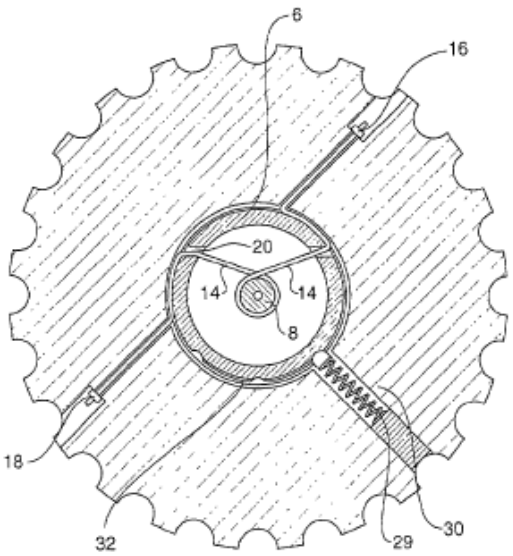

Fig 4

Ex. 1006, Figs. 3–4. Figures 3 and 4 of Hartley are top, cross-sectional views of a constriction valve, showing, respectively, the valve in an open and closed configuration. *Id.* ¶¶ 27–28, 31–34. In the open configuration (above left), rotary actuator 12 is mounted to cylindrical housing 6, and a string 14 mounted to portions of rotary actuator with knots 16, 18. *Id.* ¶ 31. String 14 (or another suitable flexible member) is wound around a cylindrical elastomeric diaphragm 8. *Id.*; *see also id.* ¶¶ 16–17 ("The flexible member may be a string, suture or band or other suitable material").

Hartley teaches that "[r]otation of the rotary actuator 12 with respect to the cylindrical housing 6 will cause the string 14 to be pulled in both directions at once and hence the cylindrical diaphragm 8 to be constricted" and sealed as shown in Figure 4 (above right). *Id.* ¶¶ 31, 34. According to Hartley, its invention provides "an access or constriction valve arrangement which will close over a range of diameters of devices passed through the valve or can close completely down to be self[-]sealing." *Id.* ¶ 37.

3. Eller (Ex. 1007)

Eller is a U.S. patent that issued May 29, 2018, and indicates a publication date of October 29, 2015. Ex. 1007, codes (45), (65). Eller relates, in general, to "[s]elective fluid barrier valve devices" and methods of treatment using such medical devices. *Id.* at Abstr., 1:13–16.

Eller discloses that "[a]n embodiment of a selective fluid barrier device comprises a housing, an actuator, a sleeve, a wire member, and a connector." *Id.* at Abstr. "The sleeve defines a passageway that extends through the [valve]" and [t]he actuator is movable between a first position and a second position" where the first position allows fluid to pass through the sleeve and, in the second position, fluid is prevented from passing. *Id.*

An embodiment of Eller's selective fluid barrier valve device is shown in Figure 15 below.

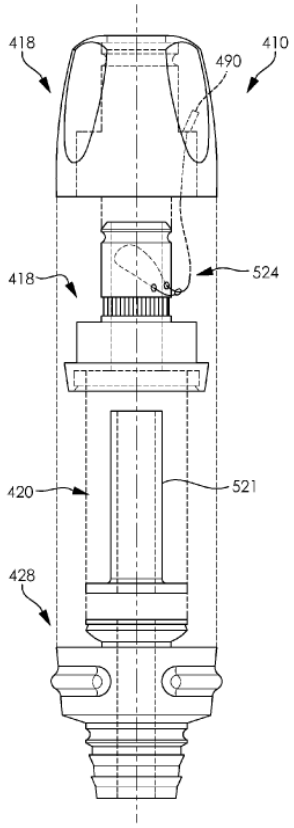

FIG. 15

Ex. 1007, Fig. 15; *see also id.* at Figs. 1–2 (perspective and exploded views of similar valve device). Figure 15, reproduced above, is an exploded view of an illustrative selective fluid barrier valve of Eller. The valve device 410 includes, among other features, actuator 418, sleeve 420, and a wire member 422 (not labeled) with a first end 524 attached to actuator 418 within cavity 490. *Id.* at 21:37–22:24 ("wire member can be positioned such that it extends at least one full revolution around the outer surface of the sleeve"); *see also id.* at Figs. 16–17 (showing wire 422 looped around sleeve 420 within housing 416). As disclosed in Eller, movement (e.g., rotation) of the actuator from its first position to its second position pulls the wire member to constrict and close sleeve 420. *See, e.g.*, *id.* at 22:25–31, 1:55–2:6 (disclosing that, in the second configuration, "the sleeve passageway is closed and prevents fluid from passing"). Eller further teaches that the valve device can "be biased to the second [(closed)] configuration" by, for example, using a spring. *Id.* at 19:22–30.

Eller teaches that its disclosure can be applied to many types of actuators and is not limited to rotary actuators. *Id.* at 8:27–44. According to Eller, "while a rotatable member 29 has been illustrated, a selective fluid barrier valve device can include any suitable actuator capable of moving . . . between a first configuration and a second configuration. Skilled artisans will be able to select a suitable actuator" and "[e]xample actuators . . . include rotatable actuators, linear actuators, slidable actuators . . . and any other actuator considered suitable for a particular embodiment." *Id.*

Eller discloses that a "wire member . . . can have any suitable structure and comprise any suitable number of strands and/or fibers that are twisted, or otherwise interconnected to one another." *Id.* at 15:61–16:6 (teaching "wire member can comprise a suture or a cable"). Eller further

discloses that "[a]ttachment between a wire member and a housing and/or an actuator can be accomplished using any suitable method or technique" including, for example, "adhesives, welding, [or] fusing." *Id.* at 14:37–53.

4. Garrison (Ex. 1011)

Garrison is a U.S. patent application that published on June 25, 2015. Ex. 1011, code (43). Garrison is titled "Methods and Systems for Treatment of Acute Ischemic Stroke" and relates to a system for treating an artery, especially cerebral arteries. *Id.* at Abstr., code (54); *see also id.* ¶ 2 ("[T]he present disclosure relates to methods and systems for transcarotid access of the cerebral arterial vasculature and treatment of cerebral occlusions."), ¶ 7 ("Disclosed are methods and devices that enable safe, rapid and relatively short transcarotid access to the cerebral and intracranial arteries to treat acute ischemic stroke . . . [and] include one or more transcarotid access devices, catheters, and thrombectomy devices to remove the occlusion.").

Garrison discloses embodiments having "aspiration and flow control elements configured to be used with an arterial access device, a guide catheter, and/or a catheter of the disclosed system." *Id.* ¶ 130. An embodiment of Garrison's system is shown in Figure 34 below, which figure includes Petitioner's added labeling and color-coding. Pet. 25 (citing Ex. 1011, Fig. 34 (annotated by Petitioner)); Ex. 1011, Fig. 34.

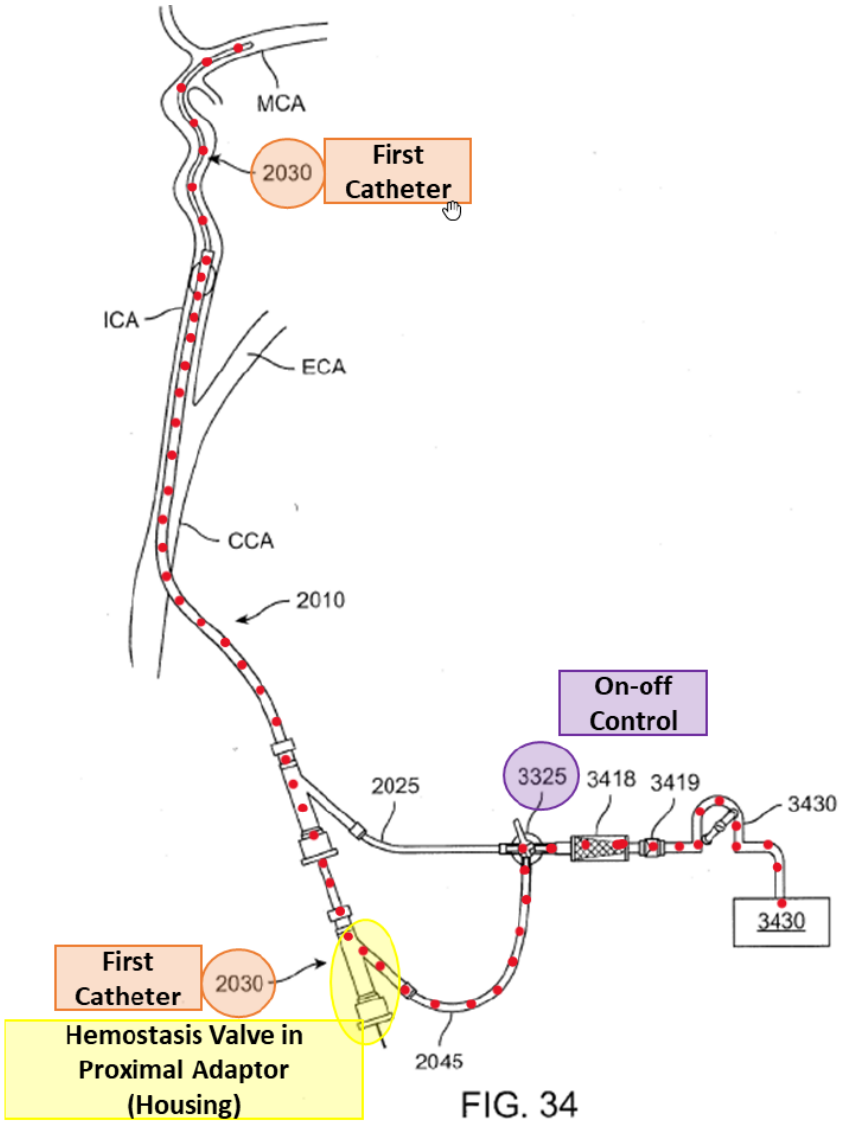

FIG. 34

Garrison's Figure 34, above, is a side perspective view of a system for treating an artery with active aspiration. Ex. 1011 ¶ 29. The system includes, among other features, catheter 2030 (highlighted orange), flow lines 2025 and 2045, control valve 3325 (highlighted purple and labeled "On-off Control"), filter 3418, and aspiration source 3430. *Id.* ¶¶ 131–132. The system includes a hemostasis valve (highlighted yellow and labeled "Hemostasis Valve in Proximal Adaptor (Housing)"). *See id.* ¶ 61 ("The hemostasis valve 226 [(as numbered in Fig. 6)] can be a static seal-type passive valve, or an adjustable-opening valve such as a Tuohy-Borst valve

227 or rotating hemostasis valve (RHV) (see FIG. 6)."); *see also id.* ¶ 53 (disclosing system includes hemostasis valves "to allow introduction of devices while preventing or minimizing blood loss during the procedure"). The system of Figure 34 also includes, according to Petitioner, a flow path for aspirated fluid, which flow path is illustrated by the dashed red line in the annotated version of the figure above. Pet. 23–25; Ex. 1011 ¶¶ 59, 130, 133.

E. Ground 1: Obviousness over Garrison and Schaffer

We begin with Petitioner's contentions against claim 1. Petitioner argues that Garrison teaches all of claim 1's limitations, except the specific features of claim 1's hemostasis valve, including the recited "filament" and the "biasing system." Pet. 21–61. Petitioner relies on Schaffer as teaching or suggesting those features. *Id.* at 38–49, 60–61.

Petitioner argues that Garrison discloses claim 1's preamble (if limiting), as well as the housing, flow path, on-off control, first catheter, connector, and clot cannister limitations. Pet. 21–33 (citing, e.g., Ex. 1011 ¶¶ 7, 29, 48, 59, 62, 65, 67, 98, 130–133, 142, Figs. 9, 32–35).[14]

Petitioner contends that, although Garrison's systems include one or more hemostasis valves, Garrison does not disclose a hemostasis valve having all the features required in claim 1. Pet. 35 (noting Garrison teaches, for example, adjustable or rotating hemostasis valves may be used (citing Ex. 1011 ¶¶ 62, 65, 98)). Petitioner therefore turns to Schaffer and its

[14] In addition to the "filament" term, Patent Owner disputes that the combination of Garrison and Schaffer teaches claim 1's limitation of an "on-off control in the flow path." PO Resp. 33–40. We address Patent Owner's contentions about that "flow path" limitation under Section III.F. Beyond those limitations, Patent Owner does not contest that the combined art under Grounds 1–3 teaches or suggests the limitations of claim 1.

teaching of an adjustable-opening "fluid stasis valve" that includes two actuator buttons, each coupled to a U-shaped actuating member (those two members "collectively" forming the alleged "filament") that are disposed about a seal module and that constrict the seal module/tubular member, thereby allowing the valve to open and close as required by claim 1. Pet. 38–49 (citing, e.g., Ex. 1005 ¶¶ 2, 46, 49, 55, 58, 75–77, 81, Figs. 12, 31–32, 34). Petitioner also contends that Schaffer's hemostasis valve includes resilient springs that bias the actuator buttons to a first (i.e., closed) position and, thus, satisfy claim 1's recited "biasing system." *Id.* at 60–61 (citing Ex. 1005 ¶¶ 76–77, Fig. 32).

Petitioner argues that a POSA would have been motivated to use Schaffer's hemostasis valve in Garrison's aspiration system for several reasons. Pet. 35–37. Petitioner contends that Garrison discloses that adjustable-opening hemostasis valves may be used, that Schaffer suggests its adjustable-opening valve may be used with catheters like described in Garrison, and that a skilled artisan would have recognized that Schaffer's valve, with its features biasing the valve to a closed position, could simplify operation of conventional hemostasis valves like described in Garrison by avoiding a need to manually close/seal such valves during procedures. *Id.* (citing Ex. 1003 ¶¶ 95–99).

We determine that the preponderance of the evidence of record does not support Petitioner's argument that claim 1 would have been obvious over the combination of Garrison and Schaffer. As explained below, we agree with Patent Owner that neither Garrison nor Schaffer discloses a "filament" as claimed. PO Resp. 40–45.

The claimed filament requires flexibility. *See supra* Section III.C. We find that Schaffer does not describe this claimed feature, and Petitioner

does not rely on Garrison as teaching or suggesting a filament as we have construed that term. *See generally* Pet.

Patent Owner argues, and we agree, a POSA would more likely have understood the two U-shaped actuating members described in Schaffer as being substantially "rigid." *See, e.g.*, PO Resp. 40–42 (noting, e.g., that Schaffer discloses that its actuators and actuating members can be made by machining pre-existing amounts of metals and/or plastics); Ex. 1005 ¶ 82; Ex. 2026 ¶¶ 94–105 (testifying, *inter alia*, a POSA would have recognized that machined parts like described in Schaffer would be rigid members).

The Petition provides no persuasive evidence to support the notion that a POSA would have understood Schaffer's U-shaped members as being "flexible."[15] Petitioner also implicitly admits that Schaffer's U-shaped members are rigid when Petitioner asserts that actuation of those members to constrict the seal module could create gaps and routes for possible leakage compared to alternative uses of the flexible string or wire member disclosed in Hartley and Eller (e.g., under Grounds 2 and 3). PO Resp. 34 (citing Pet. 40–46). Indeed, Mr. Thornton's opinion in support of Petitioner's other grounds, that, "if a tool did not ***fit the size*** of Schaffer's U-shaped members, small gaps could form," is more consistent with a determination that those members are inflexible and, thus, unable to dynamically change their size or

[15] The Petition, although acknowledging Patent Owner's argument in related proceedings that Schaffer's actuating members are "rigid," states only that "PO's arguments are inconsistent with Schaffer." Pet. 44 (citing Ex. 1003 ¶ 113). This threadbare contention, undeveloped in the Petition, does not demonstrate that Schaffer discloses a flexible filament. *SmithKline Beecham Corp. v. Apotex Corp.*, 439 F.3d 1312, 1320 (Fed. Cir. 2006) ("A skeletal argument, really nothing more than an assertion, does not preserve a claim.") (internal quotation marks omitted).

shape to conform to the dimensions of an inserted tool when actuated. Ex. 1003 ¶ 138 (emphasis added).

We credit Dr. Zalesky's interpretation of Schaffer on whether the POSA would have understood Schaffer as describing *rigid* actuating members. Dr. Zalesky testifies, for example, that a POSA would have understood from Schaffer's disclosures about the actuating members being "machined" from metal or plastic, that such actuating members would be rigid. Ex. 2026 ¶ 101 (explaining "machining is a manufacturing process in which the desired part . . . is created using the controlled removal of bulk material" to produce a "rigid material"); Ex. 1005 ¶ 82 ("The actuating member 55 and the actuating button 261 is machined from aluminum" and "[i]n another example, the actuating member 55 and the actuating button 261 are machined from plastic"); Ex. 2026 ¶¶ 102–103 (testifying the disclosed valve assembly technique in Schaffer (Ex. 1005 ¶ 83) also indicates that "rigid" actuating members are used).

Mr. Thornton opines (without citation to any persuasive supporting disclosure) that a POSA "would have understood that Schaffer's U-shaped actuating members would have preferably been formed from a thin, flexible material." Ex. 1003 ¶ 113. But, at deposition, Mr. Thornton conceded that machined plastics and aluminum, like disclosed in Schaffer, are rigid. Ex. 2005, 168:2–6 ("Q. And you said that plastic that would be machined would be rigid, correct? A. I think that's a fair statement."). Although Mr. Thornton opines that Schaffer's actuating members would "preferably"

have been flexible, he identifies no disclosure or example in Schaffer—preferred or unpreferred—where that is shown.[16]

Petitioner also argues in its Reply that the U-shaped actuating members in Schaffer's Figures 31 and 32 "would be flexible" because those actuating members have "a thickness substantially less than their length." Pet. Reply 20–21 (citing Ex. 1005, Figs. 31, 32; Ex. 1040 ¶¶ 17–26). Petitioner's argument is unavailing. A steel beam or a plastic broom handle are longer than they are wide and yet conventionally rigid. And, specific to the subject matter here, as Mr. Thornton admits, machining the valve's actuating members from plastic or metal, which Schaffer describes, would produce rigid members. Ex. 2005, 168:2–6; *see also* Ex. 2028, 152:8–10 (testifying a flexible aluminum wire would ***not*** be made from machining aluminum). Moreover, considering Schaffer's cited drawings—Figure 32, in particular—the drawings do not show the actuating members changing shape or dynamically conforming to the outer surface of the seal module that those members are compressing, which, had that been shown, might indicate flexibility. Maybe the absence of any dynamic conformance of the surface of the actuating members is an unintended limitation or artifact of the

[16] Although Petitioner contends that other manufacturing techniques were available that could have produced flexible members and suggests a POSA could have simply purchased pre-made flexible sheets or ribbons, Petitioner did not adequately develop this position or submit prior art under Ground 1 to persuasively support it. *See* Pet. 48–49 (citing Ex. 1003 ¶ 118); Pet. Reply 23–24 (citing Ex. 1040 ¶ 23). Thus, Petitioner does not show that the combination of asserted art under Ground 1 teaches or suggests all claim 1's limitations. Insofar as Petitioner argues under Grounds 2 and 3 that it would have been obvious to modify Schaffer's valve to use the flexible string/wire in Hartley and Eller, we discuss below when addressing those grounds.

drawing. Or maybe not, and what is shown is a rigid structure consistent with Schaffer's other disclosures as already explained.

Ultimately, on whether Schaffer discloses rigid or flexible U-shaped actuating members, Dr. Zalesky's interpretation of the reference is more plausible and consistent with the record. Notwithstanding Mr. Thornton's testimony in his rebuttal declaration that a POSA reading Schaffer would have understood that flexible actuating members are described (*see* Ex. 1040 ¶¶ 16–20), his testimony on cross-examination was equivocal—he admitted "[i]t's not clear" whether Schaffer's U-shaped actuating members are flexible or rigid. Ex. 2028, 115:16–23 (testifying "[t]he material properties of the U-shaped actuating members are not clearly defined in the Shafer [*sic*] application"). Dr. Zalesky, in contrast, has consistently testified that a POSA would have understood that Schaffer describes rigid actuating members. *See, e.g.*, Ex. 2026 ¶¶ 94–104 (citing, *inter alia*, Schaffer's illustrations of the valve in operation, and the disclosed manufacturing and assembly methods as indicating that "the actuating members 55 are rigid rather than flexible").

For the reasons above, Petitioner has not established that the claimed "filament" is disclosed in the combination of Garrison and Schaffer and, thus, Petitioner has not shown by a preponderance of the evidence that claim 1 would have been obvious over Garrison and Schaffer.

Petitioner's challenge to independent claim 10 (and the claims that depend from claim 1 and claim 10) fails for similar reasons. Each of the challenged claims requires a "filament" and, given our construction of that term and our findings above that Schaffer does not teach or suggest the claimed filament, Petitioner has not proved by a preponderance of the

evidence that claims 2–12, 14, and 15 would have been obvious over Garrison and Schaffer.

F. Grounds 2 & 3: Obviousness over Garrison, Schaffer and Hartley, or Garrison, Schaffer and Eller

Petitioner argues that claims 1–15 would have been obvious over the combinations of Garrison, Schaffer, and Hartley (Ground 2), or Garrison, Schaffer, and Eller (Ground 3). *See, e.g.*, Pet. 21–61 (analysis for claim 1), 61–88 (analysis for remaining claims); *see also id.* 49–55 (analysis regarding combination of elements of Hartley and Schaffer valves), 55–60 (analysis regarding combination of elements of Eller and Schaffer valves).

Because of the overlap in Petitioner's arguments for Grounds 2 and 3, as well as the overlap in Patent Owner's rebuttal arguments for those grounds, our discussion below addresses both grounds together, and we focus on claim 1 as illustrative.

The parties' remaining dispute for Grounds 2 and 3 centers on three issues: (1) whether the combined art teaches an "on-off control in the flow path"; (2) whether a POSA would have had sufficient reasons for combining the teachings of Schaffer with Hartley or Eller in the manner proposed; and (3) whether a POSA would have had reasons for using Schaffer's hemostasis valve, as modified by Hartley or Eller, in Garrison's aspiration system. *See, e.g.*, PO Resp. 33–40 (argument related disputed issue (1)), 50–76 (argument related to disputed issue (2)), 76–77 (argument on disputed issue (3)).[17]

[17] Petitioner's analysis under Grounds 2 and 3 relies on significant portions of Petitioner's analysis under Ground 1 concerning the combined teachings of Garrison and Schaffer, most of which is undisputed by Patent Owner.

1. Petitioner's Contentions

Petitioner argues that Garrison teaches or suggests claim 1's "housing" and "a hemostasis valve in the housing" insofar as Garrison describes a system that includes an aspiration catheter connected to a "proximal adaptor" (the alleged housing) and Garrison's teaching that a hemostasis valve may be "attached" or "integral to the catheter proximal adaptor." Pet. 22–23 (citing Ex. 1011, Fig. 32, ¶ 98; Ex. 1003 ¶ 71).

Petitioner further argues that Garrison teaches claim 1's recited limitations of "a flow path extending through the housing" and "an on-off control in the flow path" as seen in Garrison's Figure 34 below (annotated).

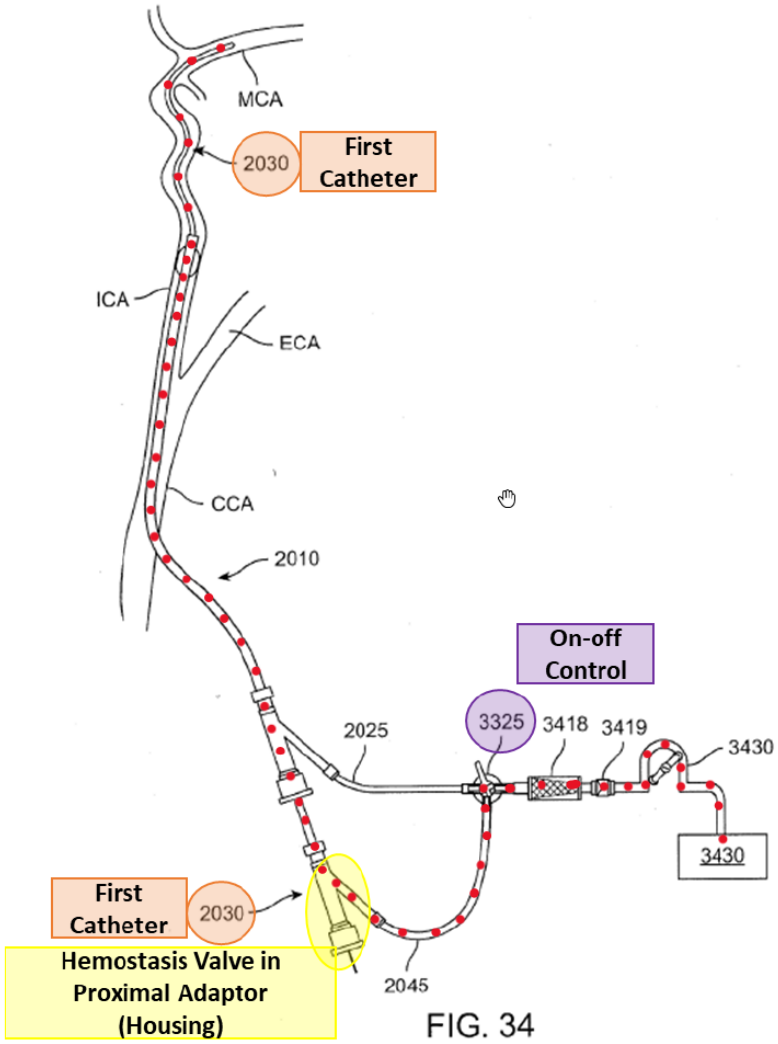

FIG. 34

Pet. 23–25; Ex. 1011, Fig. 34 (annotated); Ex. 1003 ¶¶ 77–80). According to Petitioner and Mr. Thornton, the "flow path" in Garrison's system is shown in the figure above (red dashed line), which flow path extends through the proximal adaptor/housing (yellow highlight), and an on-off control (valve 3325, purple highlight) is in the flow path. Pet. 25; Ex. 1011 ¶ 132 (teaching "valve 3325" may be, for example, a stopcock or flow controller that controls connection of arterial access devices (catheters) via flow lines (2025, 2045) to an aspiration source); Ex. 1003 ¶¶ 79–80.

Petitioner argues that a POSA would have been motivated to use Schaffer's adjustable hemostasis valve (with a further modification in light of Hartley or Eller, discussed below) as an alternative to such conventional, adjustable hemostasis valves like described in Garrison (e.g., Tuohy-Borst or rotating hemostasis valve (RHV)). Pet. 35–37 (citing Ex. 1011 ¶ 98). Petitioner advances five reasons for adding Schaffer's valve, including that the addition would have involved a straightforward and predictable substitution of known hemostasis valves, and the potential for Schaffer's valve, with its self-closing features, to simplify the operation of Garrison's system. *Id.*; Ex. 1003 ¶¶ 97–98 (testifying "Schaffer's springs bias the valve to the closed position when no pressure is applied to the buttons, which would eliminate the need for the operator to manually seal or close the valve," simplifying and saving time during a procedure).

Grounds 2 and 3 further propose substituting the U-shaped actuating members in Schaffer's valves with another structural lumen-sealing feature used in the hemostasis valves of Hartley or Eller. More specifically, Petitioner proposes replacing the two actuating members with a single flexible string (as described in Hartley) or a flexible wire member (as

described in Eller) and, thereby, arriving at a hemostasis valve as claimed, including the recited "filament." *See generally* Pet. 43–60.

For Ground 2, Petitioner contends that a skilled artisan "would have found it obvious to substitute Hartley's string for Schaffer's [U-shaped] actuating members," arguing, *inter alia*, that such modification would have "merely entailed substitution of one known element (Hartley's string) for another (Schaffer's actuating members) to yield the predictable result of sealing Schaffer's valve." *Id.* at 50–55 (arguing a POSA would have recognized Hartley's flexible string encircles the central lumen and more precisely conforms to the diameter of inserted devices (e.g., other catheters or tools) and, thus, may seal more effectively across a wider range of diameters for such inserted devices compared to Schaffer's U-shaped members and avoid formation of small gaps between the valve's lumen and the outer surface of the inserted devices); Ex. 1003 ¶¶ 123–132; Ex. 1006 ¶¶ 31, 37, Figs. 1–4.

Furthermore, Petitioner contends, POSAs had "a finite number of materials to select from to constrict a tubular member in a hemostasis valve in 2018." Pet. 52 (citing Ex. 1003 ¶ 126). According to Petitioner, Hartley and Schaffer disclose two such options: Hartley's string and Schaffer's plastic or metal U-shaped actuating members. *Id.* And, Petitioner contends, "Eller discloses a third option: wire members." *Id.* Petitioner contends that a POSA "would have found it obvious to select from these finite, predictable options" and done so with a reasonable expectation of success. *Id.*; *see also id.* at 52–55 (explaining the design and operation of the modified valve of Schaffer and Hartley and arguing that a POSA would have reasonably expected success in such modification to arrive at the claimed subject matter); Ex. 1003 ¶¶ 128–132.

The image below illustrates Petitioner's proposed combination of Schaffer and Hartley.

Demonstrative Illustration
Schaffer + Hartley's String

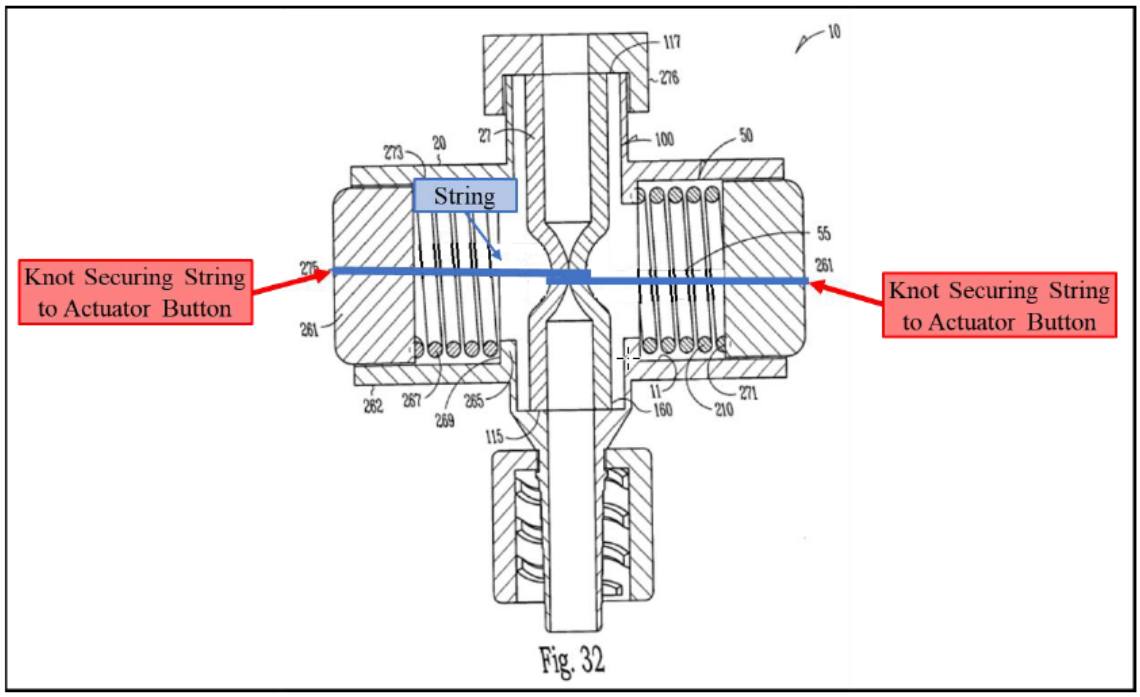

Pet. 53. The above image is a demonstrative that shows Schaffer's valve (from Schaffer's Figure 32) modified to substitute the two U-shaped actuating members for Hartley's single continuous string (blue highlight), which string loops around an outer wall 27 of seal module 100 and is secured at the string's ends (e.g., by knots) to the respective actuator buttons (red highlights). *Id.* (citing Ex. 1003 ¶¶ 128–132). Petitioner contends the skilled artisan would have reasonably expected success in this modification because, for example, Hartley's string would function in a similar way to Schaffer's U-shaped actuating member—constricting and collapsing the central valve lumen due to a force applied by the opposing springs and actuator buttons that pulls the string in opposite directions. *Id.* at 53–55 (citing, e.g., Ex. 1005 ¶ 77; Ex. 1006 ¶ 31; Ex. 1003 ¶¶ 127, 129–132).

Petitioner contends that a skilled artisan would have recognized that, depending on the diameter and shape of the tool inserted into the valve's central lumen during surgical procedures, Hartley's string may provide a more effective seal than Schaffer's U-shaped actuating members. Pet. 51–52 (citing Ex. 1003 ¶¶ 123–124). The graphic below helps illustrate Petitioner's reasoning.

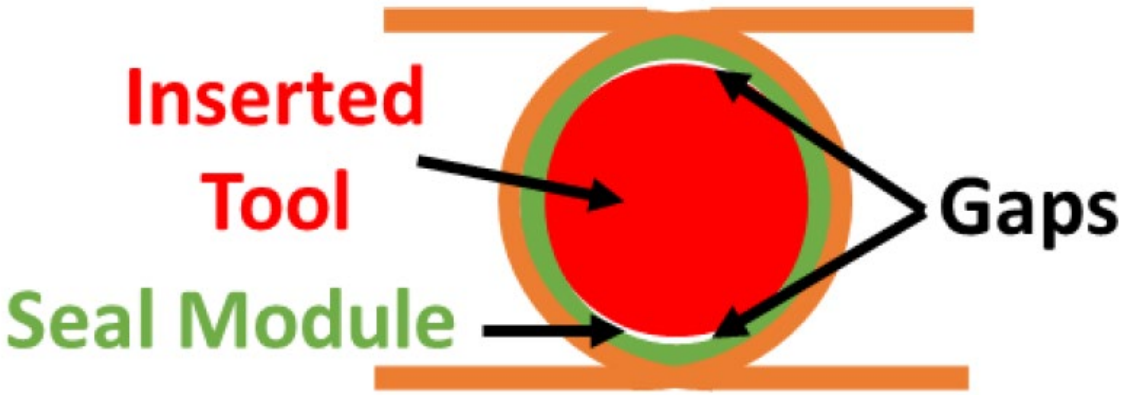

Id. The above graphic shows a longitudinal view of a seal module (i.e., tubular body with a tubular sidewall) defining a lumen (green) with a tool/device (red) with a circular diameter inserted through that lumen. *Id.* The graphic shows two opposing and overlapping U-shaped features (orange) that represent Schaffer's U-shaped actuating members as they are being pulled against the outer walls of the tubular member (e.g., seal module) to form a fluid seal in the lumen. *Id.* But, as Petitioner argues and the graphic shows, "small gaps" (white space labeled "Gaps") may form between the valve's lumen and the outer surface of the inserted tool or device in this arrangement, possibly allowing fluid/blood leakage. *Id.*

According to Petitioner and Mr. Thornton, "Hartley's [flexible] string would not suffer from this potential issue" because the string encircles the central lumen and "more precisely conforms to the tool diameters" when its ends are pulled in opposite directions and the string is placed under tension.

Pet. 51 (citing Ex. 1006 ¶ 37 (teaching Hartley's string "will close over a range of diameters of devices passed through the valve or can close completely down to be self[-]sealing")); Ex. 1003 ¶¶ 123–124 (testifying a POSA "would have known that multiple tools of varying sizes could be required for a medical procedure, so Hartley's ability to seal around a range of diameters would have been beneficial" and "Hartley's flexible string may better conform to varying diameters or shapes of tools inserted into the valve than Schaffer's U-shaped actuating members").

Petitioner's proposed combination of Schaffer and Eller (Ground 3) is similar, but uses Eller's flexible "wire member" as the alleged "filament" in essentially the same way as Hartley's string is used and depicted above in the modified Schaffer valve. Pet. 55–60. The stated reasons for making the wire member substitution and reasonable expectation of success echo the Schaffer-Hartley combination discussed above. *Id.* (citing, e.g., Ex. 1007, 14:37–49, 15:21–40, 17:47–18:3; Ex. 1003 ¶¶ 133–144). Further, Petitioner points out, Eller teaches that any suitable wire-attachment technique (e.g., welding, friction fit, adhesives) can be used and its disclosures can be applied with any suitable actuator, including rotatable actuators or linear actuators like Schaffer. *Id.*; *see, e.g.*, Ex. 1007, 8:27–39.

2. Patent Owner's Counterargument

a) Alleged Missing Limitation: "on-off control in the flow path"

Patent Owner argues that the asserted combination of prior art does not disclose the claimed "housing" with "a flow path extending through the housing" and an "an-off control in the flow path." PO Resp. 33–40, 50. Patent Owner argues that, based on a plain reading of claim 1, "the limitation 'an on-off control in the flow path' requires 'an on-off control in

the flow path extending through the housing.'" *Id.* at 33–34; *see* Tr. 30:12–14 ("JUDGE FREDMAN: So you're trying to read flow path extending through the housing as meaning solely in the housing? [Patent Owner's Counsel]: That's right."). Or, more directly concerning the issue in dispute, Patent Owner argues that claim 1 "requires the 'on-off control' and the hemostasis valve be **in the same housing**." PO Sur-reply 3.

Patent Owner argues that Garrison does not describe an on-off control and hemostasis valve that are in the same housing. PO Resp. 35; PO Sur-reply 3. According to Patent Owner, Petitioner's mapping of the limitation "on-off control in the flow path" to Garrison fails because the on-off control in Garrison (valve 3325) is separated from the housing (and hemostasis valve) by a length of tubing (i.e., flow line 2045). PO Resp. 35 (citing Petitioner's annotated version of Garrison's Fig. 34). Patent Owner contends that the '005 patent "distinguishes embodiments with tubing that 'fluidly couples' items from embodiments that omit tubing such that the items are in a housing." PO Resp. 36–38 (citing Ex. 1001, Fig. 1, 6:6–20, 6:45–49); Ex. 2026 ¶ 93. At best, Patent Owner argues, Garrison's on-off control is "fluidly coupled to" the housing but it is not ***in*** that housing. PO Resp. 35; PO Sur-reply 5–6.

b) Alleged Absence of Motivation to Modify Schaffer's U-Shaped Actuating Members

Patent Owner argues that Petitioner's reasoning for modifying Schaffer's valve based on the alleged formation of small gaps (potential leak paths for fluid) is flawed because Schaffer's valve allegedly has no leakage problem requiring any solution. PO Resp. 52–60. According to Patent Owner, Schaffer teaches that its valves form a complete fluid seal. *Id.* at 53–56 (citing, e.g., Ex. 1005 ¶¶ 60, 68, 77; Ex. 2026 ¶¶ 68, 134–139). If

Schaffer's valve provided a complete seal, Patent Owner reasons, there would have been no need to make changes based on Hartley's string or Eller's wire. *Id.*

Patent Owner further argues Schaffer's valve forms a complete seal with or without instruments inserted, and even around multiple instruments. PO Resp. 53–60. According to Patent Owner, Schaffer, through the use of rigid U-shaped members that interact with and compress a highly-compliant third seal member (165), which member comprises a material that can be compared to a sticky or gelatinous substance, produces a complete fluid seal. *Id.* (citing, e.g., Ex. 1005 ¶ 58 (disclosing valve creates "nearly fluid/gas tight seal under very light compression" using material that "can be compared to a gelatinous substance"), ¶ 68 (disclosing "seal member 165 is so compliant that it forms a seal around [multiple] instruments 260 even if the instruments are irregularly shaped"), Figs. 16–19). In contrast, Patent Owner argues, Petitioner's proposed combination would seal less effectively around multiple instruments if "two circular instruments were inserted side-by-side through Schaffer's seal module." *Id.* at 59–60 (depicting a hypothetical two-instrument scenario and "Gaps" if Hartley's string was used); PO Sur-reply 14–18. Thus, Patent Owner argues the proposed modification would have been an unsuitable solution.

Patent Owner also argues that there would have been no motivation to modify Schaffer as proposed because doing so would change Schaffer's principle of operation. PO Resp. 73–76; PO Sur-reply 27. According to Patent Owner, Schaffer uses "rigid" actuating members and replacing those members with a string or wire would not allow "forcible disengagement" from the seal module. PO Resp. 74–75 (arguing Hartley's string "would never disengage" Schaffer's seal module); Ex. 1005 ¶ 77 (disclosing that

depressing the two buttons in Schaffer's valve, such as shown in Figs. 30–34, "allows each engaged actuating member 55 to forcibly disengage outer walls 27 of the seal module 100 allowing the portion 108 of the containment structure 160 to retract to an uncollapsed configuration where gases and fluids can pass"). Patent Owner also argues the proposed change to a string or wire would make assembling the valve more difficult and undermine its durability. PO Resp. 75 (citing Ex. 2026 ¶¶ 169–180). Patent Owner cites Schaffer's exemplary manufacturing and assembly techniques that produce, or benefit from, rigid actuating members. *Id.* (citing Ex. 1005 ¶¶ 82–83).

Patent Owner also argues that Petitioner's proposed modification of Schaffer to include a flexible string or wire is "not a simple substitution." PO Resp. 61–67; PO Sur-reply 19–25. According Patent Owner, each of Schaffer's actuating member is attached to its own actuator button. PO Resp. 62–66. In Hartley and Eller, however, Patent Owner contends the string and wire are not attached to *two* independently controllable actuators. *Id.* at 65–66 (explaining that Hartley's string is wound around a diaphragm or lumen and its ends are attached to a single rotary actuator that places tension on the string; explaining that Eller's wire is disposed around a collapsible lumen/sleeve and has one end attached to a stationary point (e.g., a valve housing) and the other end attached to a movable (e.g., rotatable) actuator). According to Patent Owner, Petitioner's arrangement including a string/wire having its ends attached to two separate actuators is not known in the art and, thus, the modification proposed by Petitioner is not simple. *Id.* at 61–67; Ex. 2026 ¶¶ 159–167.

Patent Owner further argues that, even if a POSA would have understood that Schaffer's valve could form gaps for fluid leakage, more plausible alternatives existed that would have improved Schaffer's seal and

solved the problem. PO Resp. 68–70. Patent Owner contends that "simple" changes, including options suggested in Schaffer, could address sealing issues, including adjusting the spring strength, or modifying the resilience or compressibility of the seal module. *Id.* (citing, e.g., Ex. 2026 ¶¶ 184–186; Ex. 1005 ¶ 59). Thus, Patent Owner argues, a POSA would have adopted such simpler fixes, not the modifications proposed by Petitioner. *Id.*

Lastly, Patent Owner argues that the possible options for constricting a tubular member in a hemostasis valve were not finite, identifiable, or known, and, thus, Petitioner has not shown that it would not have been "obvious to try" the proposed modifications using Hartley's string or Eller's wire in Schaffer's valve. PO Resp. 71–73. According to Patent Owner, Mr. Thornton admitted that there were more than three ways of sealing a hemostasis valve, undermining his initial testimony that the options were limited. *Id.* (citing, e.g., Ex. 2027, 107:3–13).

c) Alleged Absence of Reason to Use Schaffer's Valve in Garrison's System

Patent Owner argues that, if Schaffer's valves were ineffective and formed gaps as argued by Petitioner, there would have been no reason to use those valves in Garrison's systems. PO Resp. 76–77. Rather, Patent Owner contends, a POSA would have just used the conventional hemostasis valves (e.g., Tuohy-Borst or rotating valves) like described in Garrison. *Id.* (citing Ex. 1011 ¶ 98). According to Patent Owner, a POSA would have regarded those conventional valves as suitable and effective for preventing blood loss. *Id.* (citing Ex. 2026 ¶ 189).

3. Analysis

For reasons discussed below, Petitioner persuades us the challenged claims would have been obvious over the art asserted under Grounds 2 and 3, and Patent Owner's counterargument is unavailing.

a) Disclosure of All Limitations

Petitioner provides evidence-backed argument that explains where each of claim 1's limitations is disclosed in the combination of Garrison, Schaffer, and Hartley (or Eller).

As Petitioner explains, Garrison teaches a "vacuum aspiration system" as recited in claim 1's preamble (if limiting), and that system also includes a "housing," a "flow path extending through the housing," "first catheter," "connector," "clot cannister," and a "hemostasis valve in the housing." Pet. 21–33 (citing, *inter alia*, Ex. 1011, Figs. 32–35, ¶¶ 29, 59, 98, 130, 133, 142). Patent Owner raises no argument to the contrary.

Petitioner also explains persuasively where each of the remaining sub-features of the hemostasis valve of claim 1 are disclosed in the *combined* teachings of Schaffer and Hartley (or Eller).[18] Pet. 34–60 (addressing, *inter alia*, the recited "tubular member," "constricting mechanism," "actuator," "filament," and "biasing system" limitations); Ex. 1005, Figs. 31–32; Ex. 1008 (same); Ex. 1003 ¶¶ 91–147. Although Schaffer alone does not

[18] If any of Patent Owner's argument against the reasons for modifying Schaffer with Hartley or Eller are somehow construed as an argument that some aspect of the filament limitation is missing, that argument would be unpersuasive because it does not account adequately for the art's *combined* teachings. PO Resp. 62 (arguing the substitution is not simple because no reference shows a single string attached to two separate actuators); *see Fleming v. Cirrus Design Corp.*, 28 F.4th 1214, 1222 (Fed. Cir. 2022); *Bradium Techs. LLC v. Iancu*, 923 F.3d 1032, 1050 (Fed. Cir. 2019).

disclose the claimed "filament," Petitioner shows that limitation is taught or suggested in Hartley (or Eller), and Patent Owner does not argue otherwise. Pet. 49–55 (citing, e.g., Ex. 1006 ¶¶ 5, 17 ("flexible member may be a string, suture or band or other suitable material"), 31, Figs. 1–4), 55–60 (citing Ex. 1007, 15:41–60 (wire member "can be formed of any suitable material . . . and skilled artisans will be able to select a suitable material" appropriate to the embodiment, including "metals such as steel, stainless steel, titanium" and "polymers" such as "polypropylene" and "Nylon"), 15:61–16:6 (a "wire member . . . can have any suitable structure and comprise any suitable number of strands and/or fibers that are twisted, or otherwise interconnected to one another").

The only limitation of claim 1 that Patent Owner does argue is missing in the cited art is "an on-off control in the flow path." PO Resp. 1, 33–40. As noted above, Patent Owner reads this limitation as meaning that the on-off control must be, not only in the flow path, but also ***in the housing***—the ***same housing*** in which the hemostasis valve is found. *See, e.g.*, *id.* at 1 (arguing Petitioner cites an on-off "valve that is spaced apart and separate from the alleged housing"); PO Sur-reply 3. The record does not support this narrow interpretation. Instead, and for reasons discussed below, we find persuasive Petitioner's position that the claims do not require the on-off control and hemostasis valve be in the same housing, and we agree with Petitioner that Garrison teaches the limitation of "an on-off control in the flow path."

In Mr. Thornton's annotated version of Garrison's Figure 34 (a portion is excerpted below), he shows where Garrison teaches an aspiration system having a housing (where a hemostasis valve is located), a flow path extending through that housing, and an "on-off control in the flow path."

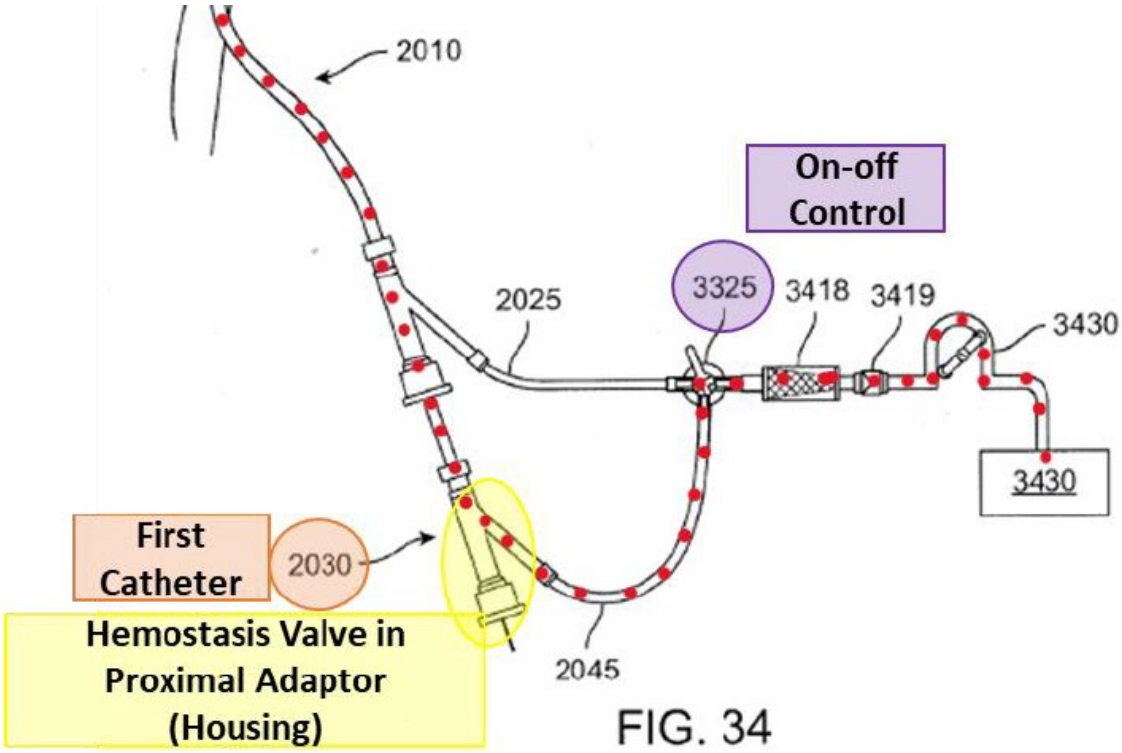

Ex. 1003 ¶ 80 (citing Ex. 1011 ¶ 132, Fig. 34 (annotated)). The figure above shows a flow path—red-dashed line. This path extends through the housing (yellow highlight), satisfying that aspect of the claim. *Id.* ¶¶ 77–78. But the flow path does not extend *solely through* the housing, which would make no sense in a system like Garrison (or the claims) that moves blood and clot material from within parts of a patient's vasculature into system features both inside and outside the patient. And there is no descriptive support in the '005 patent of a system where the flow path extends solely through a housing. Tr. 30:12–30 (counsel agreeing the word "solely" does not appear anywhere in the patent, but urging that the necessary wording is "right in the claim itself"). As depicted above, the flow path extends into and/or through other parts of the system too. That includes the catheter 2030 in portions both inside and outside the patient, flow line 2045, filter 3418, aspiration source 3430 and even through valve 3325 (purple), which is undisputedly an

"on-off control." That on-off control valve is "in" the flow path. Claim 1 requires no more with respect to that limitation. Ex. 1003 ¶¶ 77–80.

The claim language does not support Patent Owner's interpretation to the contrary. Patent Owner effectively reads claim 1 as requiring "a flow path extending through the housing and an on-off control in the housing." But, by its terms, that is not how the claim is written. The recited "housing," "a flow path extending through the housing," and "an on-off control in the flow path," are distinctly recited claim elements of the system. The claim does not, for example, read: "a housing, comprising" subordinate features of a "flow path" and an "on-off control." When the drafter of claim 1 wanted to specify that a feature was "in the housing," they did so explicitly—"a hemostasis valve *in the housing*." Ex. 1001, 35:57 (emphasis added). No such language is used for the "on-off control." The on-off control must be "in the flow path" but, as already discussed, the flow path extends throughout the system.

Patent Owner makes much of claim 1's recitation that certain features are "fluidly coupled" to the flow path, while requiring the on-off control be "in the flow path." Ex. 1001, 35:56 ("a clot cannister fluidly coupled to the flow path"); *see* PO Resp. 35–37 (citing, e.g., Ex. 1001, 6:6–20, Fig. 1 (allegedly depicting a system where an on-off control is "fluidly couple[d]" via additional tubing 124a to an outlet of hemostasis valve 106)). However, the intrinsic evidence does not support the notion that the phrase "fluidly coupled to" and "in" must have mutually exclusive meanings. A feature can be "fluidly coupled to" and also "in" the flow path consistent with the patent's embodiments and the testimony of Patent Owner's own expert about those embodiments, as discussed below.

Although the '005 patent describes many preferred embodiments—including in twenty-five figures—Patent Owner's interpretation, where being "fluidly coupled to" excludes being "in" the flow path, and further requiring the hemostasis valve and on-off control be in the same housing, finds support in ***none*** of those embodiments. *Vitronics Corp. v. Conceptronic, Inc.*, 90 F.3d 1576, 1583 (Fed. Cir. 1996) (explaining that an interpretation that excludes all preferred embodiments is "rarely, if ever, correct"). As Petitioner argues persuasively, "every disclosed system has a separate on-off control connected to the hemostasis valve via tubing," just like Garrison. Pet. Reply 16–17; Tr. 39:17–22 (Patent Owner's counsel conceding every embodiment depicted in the patent is excluded under its interpretation).

Patent Owner urges that the '005 patent describes integrally forming the hemostasis valve and on-off control within a single housing. PO Resp. 37–38. We agree with Petitioner, however, that the portion of the Specification cited by Patent Owner relates to permanently connecting or integrally forming portions of "tubing subsystem 120," yet the hemostasis valve and housing are not part of that subsystem. Pet. Reply 17–18 (citing Ex. 1001, 6:45–49). As the patent makes clear, hemostasis valve housing 106 is part of catheter subsystem 100, ***not*** the tubing subsystem 120 that includes fluid-control device 126 (i.e., an on-off control valve such as a stopcock). Ex. 1001, 5:21–29 (describing and distinguishing the catheter and tubing subsystems), 5:66–6:49 (describing tubing subsystem in detail). Patent Owner's expert agrees. Ex. 1042, 79:1–20 (conceding the cited disclosure is "describing configurations of the tubing subsystem 120," not the catheter subsystem that comprises the housing or hemostasis valve).

Patent Owner's strained reading of the Specification does not support its narrow reading of the claim.

Patent Owner's citation of the prosecution history fares no better in supporting its claim interpretation. PO Resp. 38–40. According to Patent Owner, the Examiner cited a valve ("valve 242") in a different Garrison reference (Ex. 1019) as disclosing the claimed "on-off control in the flow path." Ex. 1002, 211. According to Patent Owner, this cited "on-off control" is "not separated" from the hemostasis valve 234. PO Resp. 38–39. Further, Patent Owner contends, the Examiner did not cite other valves (232, 238) that are spaced apart via tubing from the hemostasis valve as meeting the relevant limitation. PO Resp. 39 (citing Ex. 1019, Fig. 5). The problem with this argument is twofold. First, the Examiner never found that the other valves (232, 238) would not satisfy the "on-off control in the flow path" limitation. Tr. 54:12–25 (agreeing the file history is "not definitive"). Second, even as it concerns the valve the Examiner did identify as meeting the "on-off control" limitation, that valve (valve 242) does not appear to be *unseparated from* or *in the same housing* as feature 234—the identified hemostasis valve. To the contrary, the reference describes a proximal extension (e.g., tubing, feature 240) of about 10–25 cm that extends between the portion of the system housing valve 242 and the separate hemostasis valve 234. Ex. 1019 ¶ 66, Figs. 1, 5, 11.

Patent Owner's expert also disagrees with the narrow interpretation advanced by Patent Owner. On cross-examination, Dr. Zalesky was confronted with his own annotation of Figure 1 of the '005 patent, reproduced below.

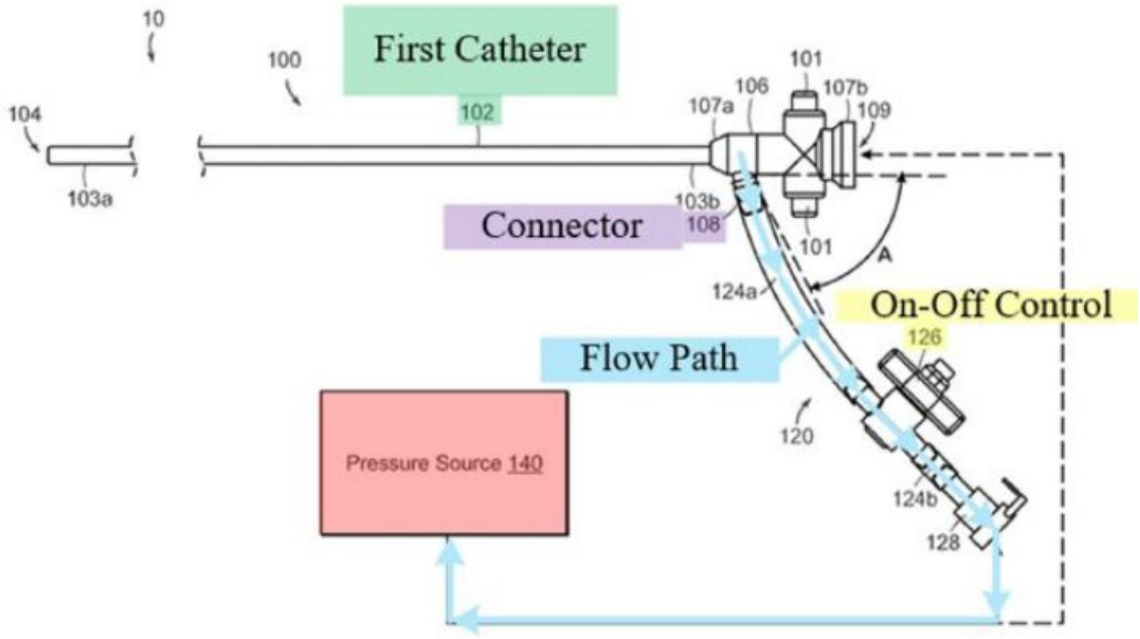

FIG. 1

Ex. 2026 ¶ 36. The above system, as highlighted by Dr. Zalesky, includes first catheter 102 (green), housing 106 comprising a hemostasis valve, connector 108 (purple), flow path (blue), on-off control 126 (yellow), and pressure source 140 (red). Dr. Zalesky agreed that valve 126 (the on-off control) is not in the same housing 106 with the hemostasis valve. Ex. 1042, 48:23–49:6 (agreeing further that "[t]he valve 126 is connected to the housing 106 by tubing" in Figure 1). Notwithstanding that the on-off control and hemostasis valve are separated by tubing and ***not in the same housing***, Dr. Zalesky testifies that, in Figure 1, "component 126 is an on-off control that ***is in the flow path***." *Id.* at 46:15–48:9 (emphasis added). And he admitted, without qualification, that claim 1 of the '005 patent covers the system depicted in Figure 1 of the '005 patent. *Id.* at 91:1–6 ("Q. Does claim 1 of the '005 patent cover the system that is shown in figure 1 of the '005 patent? A. I believe so.") (objection omitted).

Dr. Zalesky's admissions contradicting Patent Owner's interpretation of the claims did not end there. When pressed further, he testified:

> Q. You are construing claim 1 to require that the on-off control is in the housing. Correct?
> A. No. That is one option. It is not constrained to that.
> Q. What are the other options?
> A. In the flow path but not in the housing.
> Q. So it is your opinion that the on-off control recited in claim 1 does not need to be in the housing. Is that right?
> A. I am allowing for the two options, in or not in the housing.

Ex. 1042, 84:3–15. Given these concessions about claim 1's scope, it is unsurprising that Dr. Zalesky also admitted claim 1 covers the configuration described in Garrison where "the on-off control is segregated from the hemostasis valve." *Id.* at 89:13–90:5.

For all the reasons above, Petitioner persuades us that the subject matter of claim 1 is taught or suggested in the combined disclosures of Garrison, Schaffer, and Hartley (or Eller).

We have also considered Petitioner's argument and evidence in support of the challenge to independent claim 10, and dependent claims 2–9, and 11–15 under Grounds 2 and 3. Pet. 61–88; Ex. 1003 ¶¶ 148–209. That argument and evidence is persuasive in establishing by a preponderance of the evidence that the subject matter of claims 2–15 is taught in the combined teachings of Garrison, Schaffer, and Hartley (or Eller).

Patent Owner relies on its arguments for claim 1 in arguing that claims 2–15 are not obvious, which argument is unavailing for the reasons above. PO Resp. 83–84. Patent Owner also contends that none of the cited art discloses a moveable "second member" as recited in dependent claim 11, a filament with a "second end portion extending away from the loop to the second member" as recited in dependent claim 12, or a "continuous

filament" coupled at opposite ends to first and second movable members to meet claim 13. *Id.* We disagree with this counterargument. The first and second members are disclosed in Schaffer (e.g., opposing actuator buttons), the string or wire of Hartley or Eller is a continuous filament that forms a loop as claimed, and the connection of such string or wire at opposite ends to the opposing buttons of Schaffer would meet the claim language and is based on the art's *combined* teachings. *See, e.g.*, Ex. 1003 ¶ 107 (citing Ex. 1005 ¶¶ 75–76, Fig. 32 (first and second actuator buttons (members)), ¶¶ 203–207 (claim 11–13 analysis, including how combining Hartley's string or Eller's wire into Schaffer's valve meets the relevant limitations).

b) Reasons for Combining the Art & Reasonable Expectation of Success

We agree with Petitioner that a POSA would have had reasons for combining the teachings Garrison, Schaffer, and Hartley (or Eller) in the manner proposed, and with a reasonable expectation of success in producing the system of claims 1–15.

We agree with and credit the testimony of Mr. Thornton that a POSA would have been motivated to use Schaffer's valve (including as modified by Hartley or Eller) in Garrison's aspiration system. Pet. 36; Ex. 1003 ¶¶ 94–102. Schaffer's hemostasis valves are intended for use in aspiration systems described in Garrison and we are persuaded a POSA would have recognized that Schaffer's valve, with its biased-closed features, would have been seen as beneficial compared to the conventional hemostasis valves (e.g., Tuohy-Borst) disclosed in Garrison—providing a sufficient reason for the proposed combination. *See, e.g.*, Ex. 1003 ¶¶ 97, 100 (testifying the spring-biasing/auto-closing feature of the Schaffer valves could simplify operation in Garrison's system, and that a POSA would have reasonably

expected success in substituting Schaffer's valve for a conventional Tuohy-Borst or rotating hemostasis valve).

We also find, on balance, that a POSA would have considered the modification of Schaffer's valve to include Hartley's string or Eller's wire to involve little more than combining known prior art features according to those features' known functions to yield a predictable result. Hartley's string and Eller's wire were known in the art and used for a similar purpose to Schaffer's U-shaped actuating members—to constrict a tubular member and lumen and provide a fluid seal in hemostasis valves, with or without instruments inserted therethrough. *See, e.g.*, Ex. 1005 ¶ 77 (disclosing actuating members "at least partially circumferencially [*sic*] disposed about the portion 108 of the seal module 100 depressing and at least partially collapsing" the seal module); Ex. 1006 ¶¶ 5 ("flexible member [is] passed circumferentially around the cylindrical diaphragm and extending radially and/or tangentially therefrom and an extension arrangement to pull the flexible member . . . to constrict the diaphragm to at least partially close off the longitudinal aperture"), 17 ("The flexible member may be a string, suture or band or other suitable material"), 37 (describing a "constriction valve arrangement which will close over a range of diameters of devices passed through the valve or can close down completely to be self[-]sealing"), Figs. 3–4 (showing flexible member constricting central diaphragm/lumen); Ex. 1003 ¶¶ 123–132 (testifying use of Hartley's string for its known purpose would have yielded the predictable result of constricting the lumen of Schaffer's valve to form a seal), 137–144 (similar testimony on Eller's wire); Ex. 1007, 15:21–40, 17:38–43 (describing Eller's wire selectively actuated to put the wire under tension around a sleeve to alternatively close and open the fluid passageway defined by the sleeve), 18:3–8 (disclosing

"the material that forms the sleeve . . . contacts a portion of one or more of the medical devices [passed through the passageway] to close the passageway . . . such that fluid is prevented from passing").

That Hartley and Eller contemplate use of their respective string and wire for constricting a lumen and providing a seal against leakage of bodily fluids during surgical procedures also suggests that the disclosed strings and wires would have been regarded as suitable and sufficiently durable for medical devices—and hemostasis valves, in particular. *See, e.g.*, Ex. 1007, 1:13–16, 15:41–56 (listing suitable biocompatible materials for the wire member, such as polypropylene, stainless steel, and titanium).

We further agree with Petitioner that a POSA would have considered the proposed modification to be relatively straightforward, and within the ordinary capabilities of the skilled artisan. For example, as proposed by Petitioner, the ends of Hartley's string or Eller's wire could have been (and predictably would have been) attached to Schaffer's opposing actuator buttons according to known techniques, such as knotting or welding. Ex. 1003 ¶ 128 (proposing a "simple" knotting attachment); Ex. 1006 ¶ 31 ("string 14 is mounted into the rotary actuator with a knot 16"), Fig. 3 (showing string 14 connected to actuator at both ends with knots); *see also* Ex. 1007, 14:37–54 (disclosing "skilled artisans will be able to select any suitable method or technique" for attaching a flexible wire to an actuator of a fluid stasis valve; describing use of "adhesives, welding, fusing, [and] providing a friction fit" for attaching a wire to an actuator). A POSA would have likely recognized that Hartley's string or Eller's wire could be used more broadly including with valves of the type described in Schaffer—and not limited to rotary valves—as suggested by at least Eller's teachings. Ex. 1007, 8:27–44 (disclosing "[s]killed artisans will be able to select any

suitable actuator to include on a selective fluid barrier device" and identifying "rotatable actuators, ***linear actuators***, slidable actuators, [and] pivotable actuators" among others) (emphasis added). As Mr. Thornton explains, a POSA "would have understood that Schaffer's actuator is an example of a linear and slidable actuator" and Eller's teaching about the range of suitable actuators "would have reinforced" the reasonable expectation that Eller's wire could be successfully used in Schaffer's valve with its linear actuator buttons. Ex. 1003 ¶ 142.

Petitioner also persuades us that the proposed modification of Schaffer's valve to include a single flexible string or wire that replaces the two U-shaped actuating members would have been seen by the POSA as potentially advantageous—giving further reason for the POSA to have made that change. Pet. 50–52. We credit Mr. Thornton's testimony that a POSA would have understood that Schaffer's U-shaped actuating members may form small gaps for fluid leakage around the exterior of certain tools inserted into the lumen. Ex. 1003 ¶ 124. On the other hand, a POSA would have recognized that a single flexible string or wire that is looped completely around the exterior of the seal module/lumen would have provided more uniform and precise constriction around the entire outer diameter of some commonly-used tools, and including tools with diverse shapes and sizes. *Id.* ¶¶ 123–127, 137–141.

As we pointed out in related proceedings, Patent Owner's expert, Dr. Zalesky, agrees that a flexible string or wire would have carried this advantage. *See* IPR2024-01157, Paper 35 at 54 (citing testimony (Ex. 2008 ¶ 75) that a "filament changes shape dynamically, allowing for better

adaptability to the contours of the valve lumen as it is constricted").[19] Indeed, Dr. Zalesky admitted that a POSA in 2017 would have recognized that the "cinching" effect provided by a filament would be more effective for sealing around inserted tools like large-bore catheters as a matter of "simple mechanical engineering and physics." Ex. 1039 (Zalesky Tr.), 86:19–87:4.

In sum, we find that the reasons given by Petitioner support modifying Schaffer to include Hartley's flexible string or Eller's flexible wire, and that such modification would have been made with a reasonable expectation of success in arriving at the subject matter of the challenged claims. Patent Owner's counterargument, addressed below, is insufficient to undermine Petitioner's challenge under Grounds 2 and 3.

Starting with Patent Owner's argument that a POSA would not have been motivated to use Schaffer's allegedly "ineffective" valve in Garrison's system, this argument is unavailing. PO Resp. 76–77. First, it rests on a false premise. Petitioner never argued Schaffer's unmodified valve is "ineffective." Petitioner instead proposed that Schaffer's valve left room for improvement and that a POSA would have recognized that such valve may be further modified, such as by Hartley's string, to yield a potentially improved and more effective valve. Pet. 50–55. Second, Schaffer itself suggests its valves have advantages over conventional valves like those in Garrison. *See, e.g.*, Ex. 1005 ¶ 5 (noting "manual operation of existing valves most often requires a twisting motion or a squeezing motion . . . [and often] requires the use of both hands"). Indeed, Dr. Zalesky agreed that traditional valves, such as Tuohy-Borst or rotational valves, had drawbacks, and that a spring-biased, auto-closing feature (like included in Schaffer's

[19] This same testimony appears in this record at Exhibit 2026 ¶ 77.

valve) would have saved time and limited blood loss. Ex. 1042, 93:18–95:2, 102:10–103:20. The record, thus, is consistent with Petitioner's reasoning that a POSA would have recognized benefits in using Schaffer's valves in Garrison (with or without further modification based on Hartley or Eller).

Patent Owner's remaining arguments concern whether a POSA would have had a reason to modify Schaffer's valve to include Hartley's string or Eller's wire. We addressed the same arguments from Patent Owner in multiple final written decisions in related proceedings, some of which are pending appeal to the Federal Circuit. We considered Patent Owner's arguments anew, but they remain unpersuasive. And, for consistency, we adopt our analysis addressing Patent Owner's arguments from those other proceedings, which analysis applies equally here given the substantial identity in the arguments and records. IPR2024-01157, Paper 35 (Final Written Decision) at 51–68; Ex. 1050 (Final Written Decision from the 156 IPR), 52–70. Below we highlight some of the reasons why we find Patent Owner's counterargument unavailing.

Patent Owner argues that Schaffer's *unmodified* valve provides a complete seal and, thus, there is no reason to change it. PO Resp. 52–57. We disagree. Even if Schaffer is interpreted as describing valves aimed at addressing a need for a complete seal—and that at least some embodiments do so—that does not mean a POSA would forego efforts to improve on Schaffer's teachings. *Pro-Mold & Tool Co., Inc. v. Great Lakes Plastics, Inc.*, 75 F.3d 1568, 1573 (Fed. Cir. 1996) ("We start from the self-evident proposition that mankind, in particular, inventors, strive to improve that which already exists."). Even Schaffer's preferred embodiments that use a highly-compliant "sticky" or "gelatinous" material that "exhibits a 'self closing' nature" for the third seal member do not provide a perfect seal.

Ex. 1005 ¶ 59 (describing "forming a *nearly* fluid/gas tight seal") (emphasis added).

As discussed above, Petitioner and Mr. Thornton present scenarios where Schaffer's valves may not seal completely or perfectly, suggesting such valves would have been ready for improvement. *See, e.g.*, Pet. 42–43; Ex. 1003 ¶¶ 123–125 (addressing formation of potential gaps with Schaffer's U-shaped actuating members around certain tools). The improvement, as explained above, is the substitution of a flexible string or wire that would completely surround the tubular member and provide more precise and uniform constriction around the circumference of the tubular member and inserted tools.

Patent Owner further argues that Petitioner's proposed modification and improvement would only arise if one assumes Schaffer's highly-compliant third central seal member material was not used. PO Resp. 53, 57–60 (citing Ex. 2026 ¶ 144); PO Sur-reply 14–18 (arguing Schaffer's valve already seals completely via the highly compliant seal member 165 that can conform to the shape of one or more inserted instruments (citing Ex. 2026 ¶¶ 134–139; Ex. 1005 ¶¶ 60, 68)). Yet, Patent Owner argues, Schaffer requires the highly-compliant third central seal member material. PO Resp. 53–54 (citing testimony allegedly confirming the third seal member 165 is included in every illustrated embodiment in Schaffer, including Figures 30–34 (e.g., Ex. 2029, 73:13–77:3)).

We disagree with Patent Owner's argument because, when obviousness is the issue, the prior art's teachings are not limited to the art's examples and preferred embodiments. *Merck & Co., Inc. v. Biocraft Labs., Inc.*, 874 F.2d 804, 807 (Fed. Cir. 1989). The third central seal member comprising a highly-compliant material is preferred, but not required, in

Schaffer. *See, e.g.*, Ex. 1005 ¶ 59 ("In one embodiment, the third central seal member 165 includes material 166 that is highly elastic, deformable, compliant and yet virtually non-compressible," and "in one option" such material "is extremely soft and compliant and intrinsically 'sticky'"); *see also id.* (describing the highly-compliant material forming the third central seal member "[f]or illustrative purposes only"). Moreover, in introducing the embodiment of Figures 30–34, Schaffer discloses that the valve's "seal module 100 is formed of *one or more seal members*" and "[i]n another option, *the seal module 100 and/or any of its respective seal members can be formed of one or more materials*, including their relative properties, as discussed above." *Id.* ¶ 75 (emphasis added). We find that Schaffer suggests that the third central seal member with its highly compliant seal member material is optional (even if preferred). Ex. 1003 ¶ 124 (testifying that Schaffer's seal module may be made of various materials, including modified vinyl, silicone, polyurethane, and combinations or modifications thereof); Ex. 1040 ¶ 32 (testifying that the highly-compliant materials for the third seal member are optional and, according to Schaffer, the same portion of the valve could be made from, e.g., silicone or polyurethane that would lack such characteristics (citing Ex. 1005 ¶¶ 59, 81)).

Patent Owner's argument that the proposed modification of Schaffer could provide a less effective seal in certain scenarios is unavailing. PO Resp. 59–60 (showing alleged "Gaps" when a string is used and two instruments are inserted side-by-side). Obviousness does not require that a proposed prior art modification provide superior performance in all possible circumstances in which the modified device might be used. Combinations that "may be inferior for certain purposes" may still be obvious. *In re Mouttet*, 686 F.3d 1322, 1334 (Fed. Cir. 2012) ("This court has further

explained that just because better alternatives exist in the prior art does not mean that an inferior combination is inapt for obviousness purposes"); *In re Fulton*, 391 F.3d 1195, 1200 (Fed. Cir. 2004) ("[O]ur case law does not require that a particular combination must be the preferred, or the most desirable, combination described in the prior art in order to provide motivation for the current invention."). Patent Owner's suggestion that Schaffer's valve could provide a better seal in the two-instrument example also presumes that Schaffer's valve includes the highly compliant seal module material that is capable of deforming to fill in those interstices between the two instruments. PO Resp. 60 (citing Ex. 1005 ¶ 68). That material is optional as already discussed. We find the proposed modification of Schaffer would have provided an expected benefit in at least some common scenarios because a flexible string can more precisely constrict the lumen around its entire circumference against tools like a large, round cross-sectioned catheter. Ex. 1003 ¶¶ 123–124.

We also find unpersuasive Patent Owner's argument that the proposed modification of Schaffer changes its principle of operation. PO Resp. 73–75. Patent Owner suggests, for example, that Petitioner's modification would prevent "forcible disengagement" of Schaffer's actuating members from the seal module, and that a string or wire would result in a less durable valve. *Id.* (citing, e.g., Ex. 1005 ¶¶ 8, 59, 80–82; Ex. 2026 ¶¶ 180–183).

There is insufficient evidence here to show that the proposed modification of Schaffer with Hartley's string or Eller's wire would lack durability. The evidence, on balance, supports the opposite conclusion. Eller, for instance, teaches that its flexible wire can be comprised of braided materials, polypropylene, polyurethane, stainless steel, or titanium. Ex. 1007, 15:41–56. Materials such as these would have been considered

extremely durable. *See, e.g.*, Ex. 1040 ¶ 50 (testifying a POSA in 2017 would have known of many durable materials usable for forming a string or wire in a medical device, "such as polypropylene or other suture material"); Ex. 1039 (Zalesky Tr.), 169:16–170:11 (testifying that "polypropylene, polyurethane, suture catgut are amazingly durable" as well as "small-braid" wire, and a POSA would have had access to those materials before 2017).[20]

We are also unpersuaded that Hartley's string or Eller's wire—in the modified valve of Schaffer—would not "forcibly disengage" the seal module. When the buttons are pressed, a force is applied that releases the actuating members (or the string/wire in the case of the modification) to disengage the seal module, allowing it to return to an open configuration. Ex. 1040 ¶ 43. Patent Owner appears to interpret "forcibly disengage" as meaning the actuating members must physically separate and come out of contact with the seal module. PO Resp. 74–75 (stating that, if Schaffer's seal module expands against Hartley's string when tension is released, the string would never forcibly disengage the seal module). Schaffer never shows that. Schaffer depicts the actuating members staying in contact with the seal module, whether the valve is open or closed. Pet. Reply 8; Ex. 1005, Figs. 32–34; Ex. 1008, Figs. 32–34; Ex. 1038 (Zalesky Tr.), 144:15–146:8 (admitting, "[a]s depicted here, the compressive elements appear to be in contact" with the seal module).

[20] Mr. Thornton also persuasively addresses the other concerns Patent Owner raises with the proposed modification, such as alleged assembly difficulties. *See, e.g.*, Ex. 1040 ¶¶ 44–49. We credit this testimony and are unpersuaded that Schaffer's optional manufacturing or assembly techniques translate into a definition of Schaffer's principle of operation for its valves.

Patent Owner's argument that the proposed modification is not "simple" because no single prior art reference shows a hemostasis valve with a flexible string or wire attached to two actuators is unavailing. PO Resp. 61–67. Patent Owner's argument is tantamount to a complaint that none of Garrison, Schaffer, Hartley, or Eller is anticipating. The challenge is obviousness and "it suffices . . . that a person of ordinary skill in the art would have been motivated to combine the prior art in a way such that the combination discloses the claim limitation." *Masimo Corp. v. Apple Inc.*, No. 2022-1894, 2024 WL 111647 at *3 (Fed. Cir. Jan. 10, 2024) (internal quotation marks and brackets omitted). As explained above, we find that a POSA would have been motivated to make the proposed changes to Schaffer's valve and that the implementation details needed to effectuate those changes would have drawn on known techniques (e.g., knotting of ends of string), obviously extended to a linear actuator valve like Schaffer's.

Finally, Patent Owner's argument that "more plausible" changes would have been made if there was a sealing problem with Schaffer's valve is flawed. PO Resp. 68–70 (arguing a POSA could have more simply adjusted Schaffer's spring force or the properties of the seal module). That a POSA might have considered the alternative changes to Schaffer's valve suggested by Patent Owner—or even considered those changes to be superior to those proposed by Petitioner—does not negate a showing of obviousness. Obviousness is not limited to the best or simplest solution. *Intel Corp. v. Qualcomm Inc.*, 21 F.4th 784, 800 (Fed. Cir. 2021) ("[It is] not necessary to show that a combination is the *best* option, only that it be a *suitable* option.") (internal quotation marks omitted). For the reasons explained by Petitioner and Mr. Thornton, which we discussed above, we find the POSA would have had reasons to modify Schaffer's valve as

proposed and reasonably expected the modified valve would be, not only suitable, but improved.[21]

c) Conclusion

Upon considering all arguments and evidence presented through trial, we determine that Petitioner has shown by a preponderance of the evidence that claims 1–15 would have been obvious under Grounds 2 and 3.

G. Ground 4: Obviousness over Garrison, Hartley, and Eller

Petitioner contends that claims 1–3, 5, 6, and 9–15 would have been obvious over a combination of Garrison, Hartley, and Eller. Pet. 88–107; Ex. 1003 ¶¶ 210–273. As part of this challenge, Petitioner's proposes modification of Hartley's rotatable hemostasis valve to include a "biasing system," which Petitioner contends is disclosed by Eller and would have been obvious to add to the valve of Hartley to ensure a quick seal during surgical procedures. Pet. 93–97 (arguing, *inter alia*, this modification would simplify operation of Hartley's valve and eliminate the need to manually seal the valve during procedures), 88–90 (arguing a POSA would have been motivated to use Hartley's rotating valve (as further modified by Eller) as an alternative to the rotating hemostasis valve described in Garrison).

[21] The repeated assertion by Patent Owner (e.g., PO Resp. 3, 50, 69) that Petitioner's modification of the art invokes impermissible hindsight does not amount to separate argument. *In re Cree, Inc.*, 818 F.3d 694, 702 n.3 (Fed. Cir. 2016) (viewing an "impermissible hindsight" argument as "essentially a repackaging of the argument that there was insufficient evidence of a motivation to combine the references"). The reasons for modifying Schaffer to include a string or wire are supported in the record evidence and not based on knowledge gleaned only from the '005 patent's disclosure. *In re McLaughlin*, 443 F.2d 1392, 1395 (CCPA 1971).

For all the claims but claim 10 challenged under this Ground 4, Petitioner has not shown that the claimed subject matter would have been obvious over Garrison, Hartley, and Eller. As we explained in our Institution Decision, we agree with Patent Owner that Petitioner has not established that the modification of Hartley in view of Eller includes an actuator with a "first member" and a "second member" as required in claims 1–3, 5, 6, 9, and 11–15. PO Resp. 77–78 (citing Inst. Dec. 45). The alleged "first member" and "second member" cited by Petitioner (Pet. 91) are simply portions of a single, unitary rotary actuator in Hartley. Ex. 1006, Fig. 3 (single rotary actuator 12). Accordingly, we determine that Petitioner has not established by a preponderance of the evidence that claims 1–3, 5, 6, 9, and 11–15 are unpatentable under Ground 4.

Independent claim 10 does not, however, require that the actuator comprise a "first member" *and* a "second member," so the deficiency in Petitioner's showing noted above for claim 1 does not apply. *See supra* Section II.D. (claim 10 reciting, in part, "an actuator having at least a first member coupled to the support"). For the reasons advanced by Petitioner and Mr. Thornton, we find that the combination of Garrison, Hartley, and Eller teaches or suggests the subject matter of claim 10. Pet. 102–106; Ex. 1003 ¶¶ 259–267. Patent Owner argues that Garrison does not disclose the "on-off control in the flow path." PO Resp. 77; PO Sur-reply 28. That argument is flawed for the reasons discussed above. *See* Section III.F.3.a.

Patent Owner additionally argues that a POSA would not have been motivated to combine Garrison, Hartley, and Eller as proposed. PO Resp. 79–82. According to Patent Owner, Hartley discloses a valve that uses a "ball and detent system" that retains the rotary actuator on the cylindrical housing and that provides tactile feedback as the actuator is rotated to

provide varying opening sizes for the lumen. *Id.* (citing Ex. 1006 ¶¶ 4, 15, 18, 33; Ex. 2026 ¶¶ 198–207). Further, Patent Owner argues, adding Eller's torsion spring as the alleged biasing system "would override the ball and detent system and eliminate Hartley's ability to selectively maintain various opening sizes for the lumen—acting to always seal the valve." *Id.* at 81–82 (arguing the spring could also create resistance to inserted instruments).

We disagree with Patent Owner's counterargument. The ball-and-detent system cited by Patent Owner is clearly an optional feature in Hartley. *See, e.g.*, Ex. 1006 ¶ 15 ("*Alternatively* the rotary actuator may be retained on the cylindrical housing by the ball and detent arrangement discussed in more detail below."), ¶ 18 ("The rotary actuator *may have* a tactile indication of its action by means of a ball or other device acting into detents . . . .") (emphases added). The argument that the ball-and-detent feature is required for Hartley's principle of operation is undercut when the feature is described in the reference itself as optional.[22] Moreover, there would have been a material benefit to adding the torsion spring to Hartley's valve—helping to quickly seal the hemostasis valve and minimize blood loss during surgery. Ex. 1003 ¶¶ 238–239 (testifying, *inter alia*, a torsion spring biasing system would simplify use of Hartley's valve, eliminating the need for manual sealing, and reducing operator error and unwanted blood loss). As explained above, Dr. Zalesky agreed that a drawback of conventional rotating valves was the lack of a quick, self-closing feature and the need to manually turn the valve multiple times to seal against large bore catheters. Ex. 1042,

[22] Hartley's claims are consistent with other parts of Hartley's disclosure, suggesting the valve does not require a ball-and-detent feature. *Compare* Ex. 1006, independent claim 1 (no ball and detent), *with* dependent claim 12 ("including a ball and detent arrangement").

102:10–103:20. On balance, we agree with Mr. Thornton and determine that a skilled artisan would have had sufficient reasons for the proposed change to Hartley's rotating valve. And, for the same reasons, we reject Patent Owner's contention that a POSA would have avoided such a change or simply deferred to use of a traditional hemostasis valve of the sort described in Garrison. PO Resp. 82–83 (citing Ex. 1011 ¶ 98; Ex. 2026 ¶¶ 208–209).

For the reasons above, we determine that claim 10 is unpatentable under Ground 4.

IV. CONCLUSION[23]

Petitioner has shown by a preponderance of the evidence that the challenged claims are unpatentable as summarized in the table below.

Claims	**35 U.S.C. §**	**Reference(s)/Basis**	**Claims Shown Unpatentable**	**Claims Not shown Unpatentable**
1–12, 14, 15	103	Garrison, Schaffer		1–12, 14, 15
1–15	103	Garrison, Schaffer, Hartley	1–15	
1–15	103	Garrison, Schaffer, Eller	1–15	
1–3, 5, 6, 9–15	102	Garrison, Hartley, Eller	10	1–3, 5, 6, 9, 11–15
Overall Outcome			1–15	

[23] Should Patent Owner wish to pursue amendment of the challenged claims in a reissue or reexamination proceeding subsequent to the issuance of this decision, we draw Patent Owner's attention to the April 2019 *Notice Regarding Options for Amendments by Patent Owner Through Reissue or Reexamination During a Pending AIA Trial Proceeding*. *See* 84 Fed. Reg. 16,654 (Apr. 22, 2019). If Patent Owner chooses to file a reissue application or a request for reexamination of the challenged patent, we remind Patent Owner of its continuing obligation to notify the Board of any such related matters in updated mandatory notices. *See* 37 C.F.R. § 42.8(a)(3), (b)(2).

V. ORDER

In consideration of the foregoing, it is hereby:

ORDERED that Petitioner has proved by a preponderance of the evidence that claims 1–15 are unpatentable; and

FURTHER ORDERED that, because this is a Final Written Decision, parties to the proceeding seeking judicial review of the decision must comply with the notice and service requirements of 37 C.F.R. § 90.2.

FOR PETITIONER:

Joshua J. Stowell
Joseph R. Re
Brian C. Barnes
KNOBBE, MARTENS, OLSON & BEAR, LLP
joshua.stowell@knobbe.com
joe.re@knobbe.com
brian.barnes@knobbe.com

FOR PATENT OWNER:

Joseph Hamilton
Paul Parker
PERKINS COIE LLP
hamilton-ptab@perkinscoie.com
parker-ptab@perkinscoie.com