UNITED STATES PATENT AND TRADEMARK OFFICE

BEFORE THE PATENT TRIAL AND APPEAL BOARD

IMPERATIVE CARE, INC.,
Petitioner,

v.

INARI MEDICAL, INC.,
Patent Owner.

Case IPR2024-01157
Patent No. 11,697,011

SUPPLEMENTAL DECLARATION OF TROY L. THORNTON IN SUPPORT OF PETITIONER'S REPLY FOR *INTER PARTES* REVIEW OF U.S. PATENT NO. 11,697,011

Imperative Care v. Inari Medical
IPR2025-00728
Imperative Care Ex. 1039

TABLE OF CONTENTS

Page No.

I. INTRODUCTION 1

A. Engagement 1

B. Experience and Qualifications 2

C. Materials Considered 2

II. CLAIM CONSTRUCTION – "FILAMENT" 2

III. GROUNDS 1-2: CLAIMS 1-9 ANTICIPATED BY SCHAFFER OR OBVIOUS OVER SCHAFFER 8

A. Schaffer's U-Shaped Actuating Members Are Thin And Flexible 8

B. Schaffer's U-Shaped Actuating Members Circumferentially Constrict The Tubular Member 15

IV. GROUNDS 3-4: CLAIMS 1-9 OBVIOUS IN VIEW OF SCHAFFER COMBINED WITH HARTLEY OR ELLER 16

A. Schaffer's Seal Module Would Not Dissuade A Person Of Ordinary Skill From Combining Schaffer With Hartley's String Or Eller's Wire Member 16

B. Substituting Schaffer's U-Shaped Actuating Members With Hartley's String Or Eller's Wire Member Would Not Change Schaffer's Principles Of Operation 23

1. Hartley's String Or Eller's Wire Member Would Not Prevent "Forcible Disengagement" From Schaffer's Seal Module 25

2. Hartley's String Or Eller's Wire Member Would Not Prevent Assembly Of Schaffer's Valve 26

TABLE OF CONTENTS
(*cont'd*)

Page No.

3. Hartley's String Or Eller's Wire Member Would Not Weaken The Durability Of Schaffer's Valve 28

V. CONCLUSION 29

Imperative EX1014

TABLE OF EXHIBITS

Exhibit No.	Description
1001	U.S. Patent No. 11,697,011 ("the '011 patent")
1002	'011 Patent Prosecution History Excerpt
1003	Expert Declaration of Troy Thornton
1004	Resume of Troy Thornton
1005	U.S. Patent Publication US 2003/0225379 A1 to Schaffer et al. ("Schaffer")
1006	U.S. Patent Publication US 2003/0116731 A1 to Hartley ("Hartley")
1007	U.S. Patent No. 9,980,813 B1 to Eller ("Eller")
1008	Drawings Submitted During Prosecution of U.S. Patent Application No. 10/371,190 dated June 18, 2003
1009	U.S. Patent No. 5,429,616 to Schaffer ("Schaffer '616")
1010	U.S. Patent Publication US 2011/0144592 A1 to Wong et al. ("Wong")
1011	U.S. Patent Publication US 2015/0173782 A1 to Garrison et al. ("Garrison")
1012	Declaration of Joshua J. Stowell in Response to Patent Owner's Objections to Imperative Care's Evidence [SERVED ONLY]
1013	Certified File History of U.S. Patent Application 10/371,190 [SERVED ONLY]
1014	Supplemental Expert Declaration of Troy Thornton
1015	Deposition Transcript of PO's Expert Paul Zalesky, Ph.D. dated June 23, 2025

Exhibit No.	Description
1016	Decision Granting Institution of IPR, IPR2025-00156, U.S. Patent No. 11,697,012 B2
1017	Decision Granting Institution of IPR, IPR2025-00289, U.S. Patent No. 11,554,005 B2
1018	U.S. Patent No. 12,109,384 B2 to Merritt et al.
1019	New Oxford American Dictionary, 3rd ed. (2010) – definitions of "diameter," "filament," and "loop"

I, Troy L. Thornton, do hereby declare:

I. INTRODUCTION

A. Engagement

1. I have been retained on behalf of Imperative Care, Inc. ("Imperative" or "Petitioner") to provide my opinion regarding the patentability of Claims 1-9 of U.S. Patent No. 11,697,011 ("the '011 patent"). For the reasons discussed herein, I have concluded that Claims 1-9 of the '011 patent are unpatentable because the prior art references anticipate the claims or render them obvious.

2. I understand that this Supplemental Declaration supports Imperative's Reply for the above-captioned *inter partes* review ("IPR") of the '011 patent.

3. I reserve the right to supplement, change, clarify, or modify my opinions should additional information and/or documentation become available to me.

4. I am being compensated at my customary hourly rate for my work in this matter and I am being reimbursed at cost for my expenses. My compensation in no way depends upon the substance of my opinions or the outcome of this proceeding. I have no financial interest in any of the parties to this proceeding.

B. Experience and Qualifications

5. My experience and qualifications are summarized in my *curriculum vitae*, a copy of which is included as Exhibit 1004. I have also provided a summary of some of my relevant experience in my previous Declaration submitted in this IPR. *See* Ex. 1003 at ¶¶ 5-14.

C. Materials Considered

6. In preparing this Supplemental Declaration, I have considered the materials referenced in this Supplemental Declaration and identified in the attached list of exhibits.

7. I have also relied on my education, training, and experience, and my knowledge of pertinent literature in the field of the '011 patent.

II. CLAIM CONSTRUCTION – "FILAMENT"

8. I understand that Patent Owner and Dr. Zalesky have argued that the term "filament" recited in the challenged claims of the '011 patent should be construed to mean "a thin, flexible length of material formed by one or more strands of material." I disagree with Patent Owner's proposed construction for several reasons.

9. I have reviewed the '011 patent and it never describes the filament as "thin" or "flexible." In addition, the '011 patent does not provide any criteria for flexibility that would help a person of ordinary skill in the art determine whether a

specific material was, in fact, "flexible." While the '011 patent identifies some potential dimensions for the "filament(s)," the patent states that those dimensions are exemplary, not mandatory. *See* Ex. 1001 ('011 patent) at 14:18-46. Likewise, the '011 patent does not provide any information regarding the "filaments" mechanical properties, such as hardness, stiffness, ductility, and malleability from which a person of ordinary skill in the art could glean information about flexibility. Because flexibility exits along a spectrum, I would not be able to tell whether a material was "flexible" enough to qualify as a filament based on the information in the '011 patent.

10. I am aware that the Board preliminarily construed "filament" in the claims of the '012 patent to require *only* "flexible" filaments. However, I see some differences in the claims that I think impact the Board's analysis.[1] The claims of the '012 patent require "a filament formed into a loop around the tubular sidewall" and that pulling on the first end of the filament results in "reducing a diameter of the lumen in response to reducing a diameter of the loop." The claims of the '011 patent do not include this limitation and do not require that the filament form a "loop" (*see* Claim 1) or that pulling on the first end of the filament

[1] I understand I will have the opportunity to address the Board's construction of filament in the '012 patent IPR.

results in "reducing a diameter of the lumen in response to reducing a diameter of the loop."

11. I also know that Patent Owner has obtained patent claims in related patents that specifically require a "flexible" filament. For example, Patent Owner's U.S. Patent No. 12,109,384 includes claims reciting, "a first filament extending in a first loop around the tubular member, wherein the first filament ***is flexible***." Ex. 1018 at claim 1 (emphasis added). The claim further recites that the actuator can apply tension to the filament to "decrease the dimension of the first loop." *Id.* I have been informed that each term in a claim has meaning. Therefore, the limitation that the filament is "flexible" in the '384 patent suggests that some filaments in the patent are not "flexible," otherwise the words "is flexible" in the claims would be superfluous.

12. I also see in the Patent Owner Response that Patent Owner has argued that the description of a filament as being "loosened" supports its construction requiring flexibility. I see that Patent Owner tries to equate "loosened" with "flexible." But, the word "loosened" is not synonymous with "flexible." The term "loosen" in the dictionary submitted by Patent Owner means "to release from restraint." Ex. 2009. The term "loosen" does not have any relationship to flexibility because many relatively inflexible items can be loosened, such as screws and u-bolts. Movement of the filaments in the

embodiments in Figures 8 and 9 of the '011 patent would release the restraint around the elongate member and increase the size of the encircled area, even if those filaments are determined by the Board to be relatively inflexible. Therefore, I don't see the use of "loosened" in the '011 patent to require only "flexible" filaments.

13. Patent Owner's reliance on the bight embodiments depicted in Figures 8 and 9 of the '011 patent, and its suggestion that the filament must be flexible enough to "slacken when formed in a bight" also fails to resolve the uncertainty created by its proposed construction. (*See* Patent Owner Response at 34.) The '011 patent does not state that the bights "slacken" when the actuator buttons are depressed, and Figures 8 and 9 illustrate the u-shaped bights having the same shape in both the opened configuration (Figure 8) and the closed configuration (Figure 9):

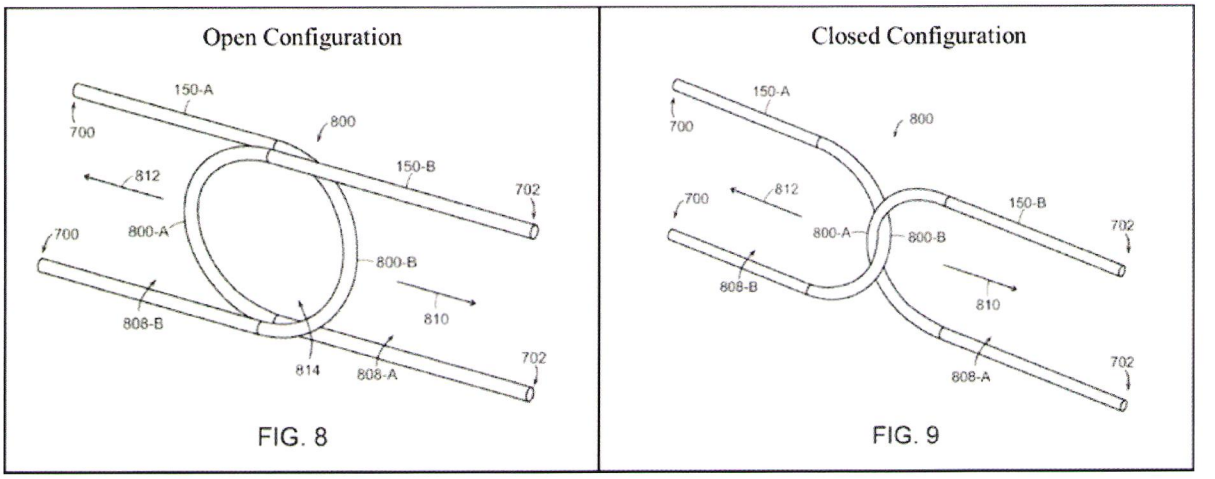

Ex. 1001 ('011 Patent) at 5:38-41, Figs. 8-9. In his Supplemental Declaration, Dr. Zalesky argues the following with respect to Schaffer:

> [I]n both the first and second positions shown in Figures 32 and 34, the actuating members 55 have an identical U-shape indicating that the depression of the actuating members 55 via the actuator buttons 261 and corresponding expansion of the seal module 100 does not affect any shape of the actuating members 55 as it would likely if the actuating members 55 were flexible rather than rigid.

Ex. 2008 (Zalesky Supp. Decl.) at ¶96. Thus, according to Dr. Zalesky, Figures 8 and 9, which show the filament having an identical u-shape, suggest that the filament is "rigid," not flexible. A person of ordinary skill in the art would have recognized that a very flexible material, such as a string, would not be capable of forming the shapes illustrated in Figures 8 and 9, where the bights have symmetrical u-shapes in both the tensioned and relaxed state. Therefore, Figures 8 and 9 do not provide any guidance on the flexibility of the materials for the filament bights.

14. I also see that Patent Owner argues that the filament must be flexible to form a loop. However, a person of ordinary skill would have known that a wide range of materials with varying levels of flexibility can be formed into loops. For example, even steel rebar can be made into loops. I also see that Patent Owner argues that the filament must be flexible to "circumferentially constrict" the lumen to create a seal. However, as I explained in my previous declaration, Schaffer's actuating members circumferentially constrict the seal module (Ex.

1003, ¶¶73-75) and yet, according to Patent Owner, the actuating members are rigid. The U-shaped filaments disclosed in the '011 patent and depicted in Figures 8 and 9 operate just like Schaffer's U-shaped actuating members, so if Schaffer can circumferentially constrict a lumen with rigid members, then so can the valve in the '011 patent.

15. Accordingly, it remains my opinion that in view of the claim language, specification, and prosecution history of the '011 patent, that a person of ordinary skill in the art would have understood the term "filament" recited in the claims of the '011 patent to mean at least: "one or more threads, lines, cords, ropes, ribbons, flat wires, sheets, or tapes."

16. However, this debate about the meaning of "filament" does not impact my views on unpatentability. As explained below, Patent Owner's attempts to characterize Schaffer's actuating members as "rigid" is not supported by Schaffer and is inconsistent with how a person of ordinary skill in the art would understand Schaffer. Further, Hartley's and Eller's string/wire member are unquestionably thin and flexible and meet either definition of "filament." Therefore, it is my opinion that claims 1-9 of the '011 patent are anticipated or obvious in view of the prior art even under Patent Owner's proposed construction of "filament."

III. GROUNDS 1-2: CLAIMS 1-9 ANTICIPATED BY SCHAFFER OR OBVIOUS OVER SCHAFFER

A. Schaffer's U-Shaped Actuating Members Are Thin And Flexible

17. Patent Owner and Dr. Zalesky argue that Schaffer's U-shaped actuating members are not a "filament" as recited in the claims of the '011 patent because they believe Schaffer's actuating members are "rigid" and lack "any inherent flexibility." I disagree with Patent Owner's and Dr. Zalesky's interpretation of Schaffer's actuating members. As I explained in my initial declaration at paragraph 71, a person of ordinary skill in the art would have recognized that Schaffer's U-shaped actuating members would have preferably been formed from a thin, flexible material.

18. Schaffer does not describe the actuating members as "rigid," and does not provide any other information that would suggest to a person of ordinary skill in the art that the actuating members are rigid, such as requirements for minimum or maximum dimensions or specific material properties. Thus, I see nothing in Schaffer that would require the actuating members to be "rigid."

19. Notably, Schaffer does expressly describe one of the other components of its hemostasis valve, the support member 168 that surrounds the seal member, as being formed from "biased weaving or tubular braiding of ***rigid*** material." Ex. 1005 (Schaffer) at [0070] (emphasis added). This conveys to a person of ordinary skill that the inventors of Schaffer knew how to describe a

material as "rigid." If the actuating members were actually "rigid," a person of ordinary skill would have expected the inventors to say so, as they did with the support member 168. But they did not, which suggests to a person of skill that the actuating members are not limited to "rigid materials."

20. A person of ordinary skill in the art would have understood that Schaffer's U-shaped actuating members would have preferably been formed from a thin, flexible material in order to provide optimal sealing. Such a material would have permitted the actuating members to conform, as much as possible, to the outer surface of the seal module and tool inserted through the valve. For example, not all tools inserted through the valve would have a circular profile. In those cases, U-shaped actuating members having some flexibility would better seal around the irregular shapes. A thin metallic or plastic flat wire, sheet, or ribbon would have provided the flexibility required for the actuating members to best seal around tools of various shapes and sizes.

21. Figures 31-34 of Schaffer also convey to a person of ordinary skill in the art that the U-shaped actuating members are thin and flexible. Schaffer's figures illustrate the actuating members as plastic or metal pieces with a thickness that is substantially less than their length. *See* Ex. 1005 (Schaffer) at Figs. 31-34. In addition, although Schaffer does not provide precise dimensions for the U-shaped actuating members, a person of ordinary skill in the art would have

recognized that they would be thin and flexible based on the depiction of the actuating members in relation to the other components of the hemostasis valve. For example, Schaffer depicts the actuating members having the same thickness as the coils of the compression spring, which must be relatively flexible to function:

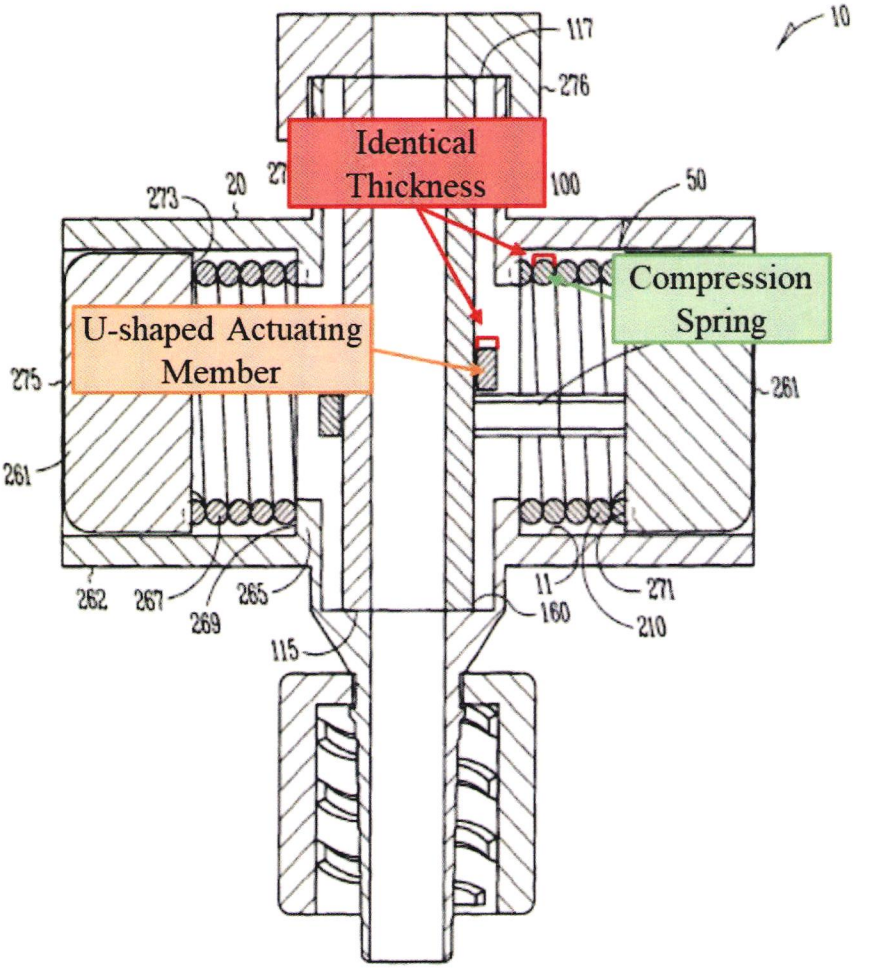

Fig. 34

Id. at Fig. 34. A person of ordinary skill would have understood that a component formed from metal or plastic with such dimensions would have significant

flexibility. Notably, the '011 patent illustrates the filament 150 having a thickness that is slightly larger than the coils of its compression springs:

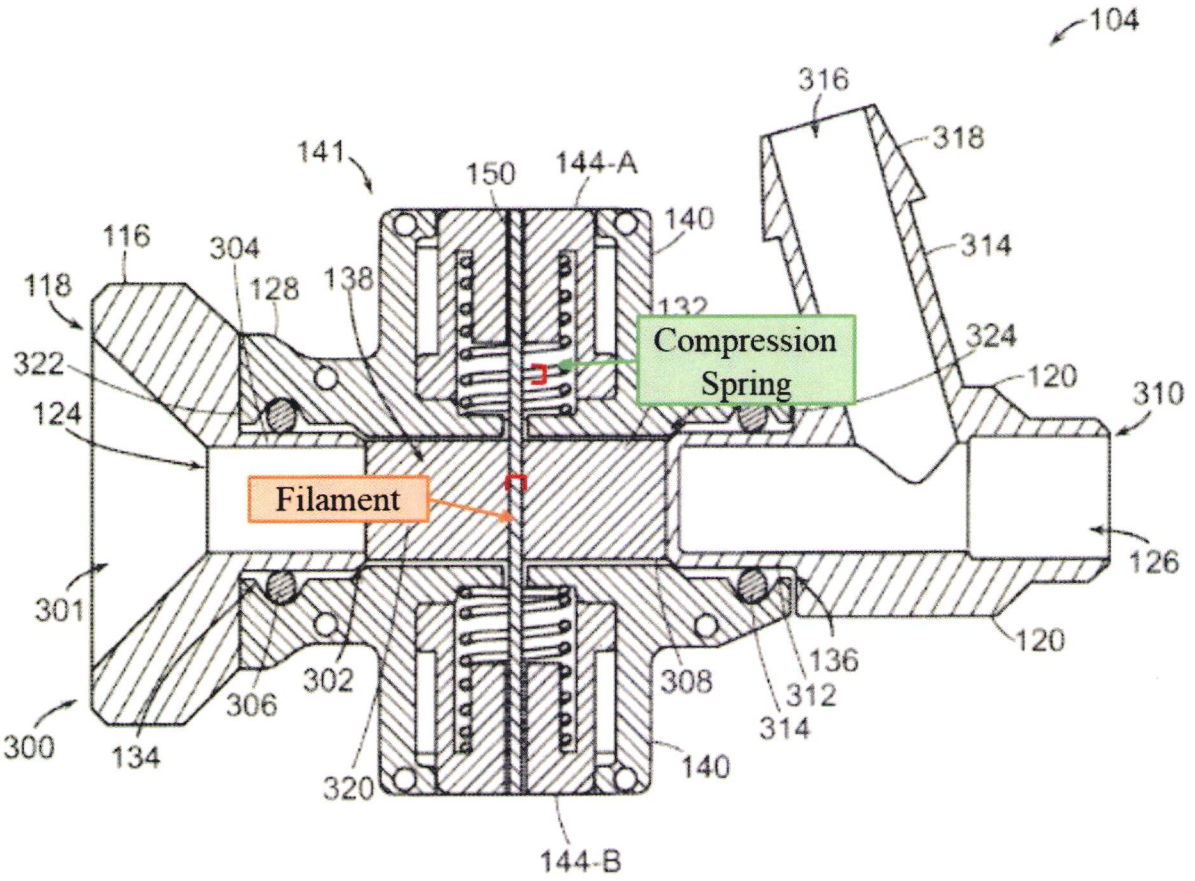

FIG. 3

Ex. 1001 ('011 patent) at Fig. 3.

22. I am aware that Dr. Zalesky testified in his deposition that he believes Schaffer's figures illustrate the actuating members as being "certainly thicker than filaments" and roughly 10mm thick. Dr. Zalesky's interpretation of Schaffer's figures is not reasonable. If Schaffer's actuating members were 10mm thick as

Dr. Zalesky suggests, the other components of Schaffer's valve would be unreasonably and unworkably large:

Dr. Zalesky's Unreasonable Interpretation
Schaffer's Valve with 10mm Thick Actuator Member

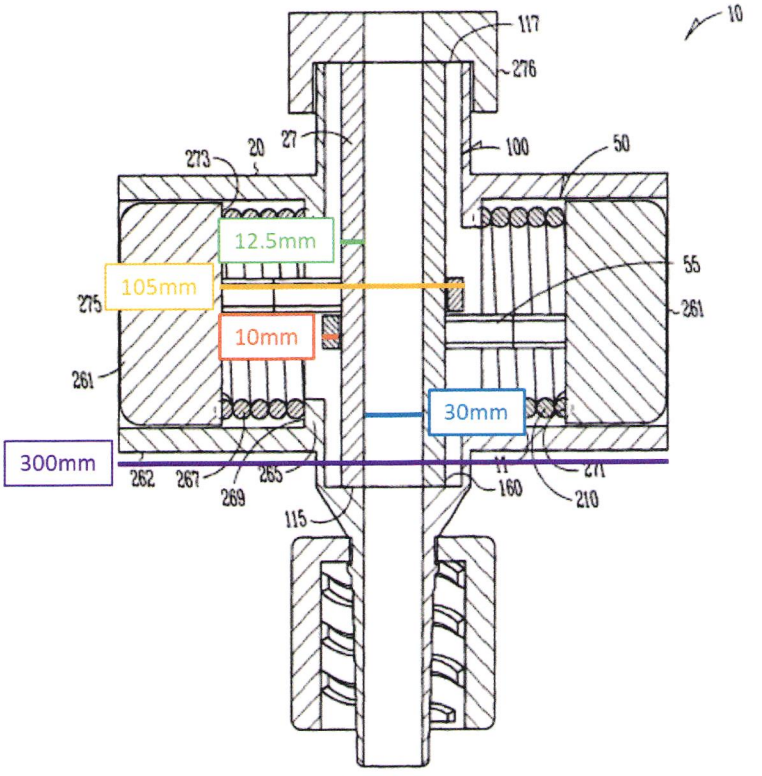

Fig. 34

Ex. 1005 (Schaffer) at Fig. 34. For example, as I've illustrated above, the lumen of Schaffer's valve in Dr. Zalesky's interpretation would be 30mm (i.e., 90F), which is far larger than any catheters used for intravascular procedures. In addition, the total width of Schaffer's valve in this scenario would be roughly 300mm (nearly a foot wide), which would be far too large for any operator to reasonably handle. Accordingly, I disagree with Dr. Zalesky's testimony.

23. Patent Owner and Dr. Zalesky also argue that the actuating members in Schaffer are "rigid" based on the following description:

> The stasis valve 10, in one option, is made from machining pre-existing amounts of metals and/or plastics. For example, [t]he actuating member 55 and the actuating button 261 is machined from aluminum.

Ex. 1005 (Schaffer) at [0082]. However, the description that a device is "made from machining" is not dispositive of whether the finished product is rigid or flexible. In the case of aluminum, for example, if enough material is removed during machining, then the final product would not be rigid. In his deposition, Dr. Zalesky agreed that metallic or polymeric filaments could be manufactured by machining. Ex. 1015 (Zalesky Tr.) at 99:7-17.

24. Moreover, the description of "machining" the parts is just "one option." A person of ordinary skill in the art would have known that the U-shaped actuating members could be made using a variety of common manufacturing techniques, including extrusion and drawing. Dr. Zalesky agreed in his deposition that such techniques for manufacturing polymeric or metallic filaments were available prior to 2017. *Id.* at 96:4-99:6. In fact, in 2017, a person of ordinary skill in the art could have simply purchased pre-made flat wire or plastic ribbons.

25. Patent Owner and Dr. Zalesky also argue that Schaffer's actuating member must be "rigid" due to the following disclosure in Schaffer:

> As each actuator button 261 is depressed, each actuator 50 slides along the cylindrical interior wall 11 of the housing 20. The proximal end 273 of each actuator button 261 compresses the distal end 271 of each resilient member 267 which in turn, the proximal end 269 of each resilient member 267 compresses against the inner flange wall 265 of the housing 20. Such movement allows each engaged actuating member 55 to forcibly disengage opposing outer walls 27 of the seal module 100 allowing the portion 108 of the containment structure 160 to retract to an uncollapsed configuration where gases and fluids can pass therethrough.

Ex. 1005 (Schaffer) at [0077]. According to Patent Owner, if Schaffer's "actuating members 55 were flexible, they would remain in contact with and never disengage the seal module 100 as the seal module expands." Patent Owner's Response at 44. I disagree that the above passage means that actuating members must be rigid. As explained above, Schaffer's actuating members always remain in contact with the seal module regardless of whether they are rigid or flexible.

26. A person of ordinary skill in the art would have recognized that the embodiment of Schaffer's valve in Figures 31-34 uses the same sealing mechanism as the garrote valve in '011 patent, particularly the bight embodiments. In both Schaffer and the '011 patent, the valve's lumen is sealed with circumferentially constricting force that is applied to opposing sides of the tubular member via semi-circular members pulled in opposite directions by compression springs. Ex. 1005 (Schaffer) at [0075]-[0077]; Ex. 1001 ('011 patent) at 13:64-14:27. Also in both Schaffer and the '011 patent, the constricting

force on the tubular member is relaxed by depressing the actuator buttons, which allows the semi-circular members to disengage (i.e., release the constricting force) the tubular member and allows the valve's lumen to open and unseal. Ex. 1005 (Schaffer) at [0075]-[0077]; Ex. 1001 ('011 patent) at 13:64-14:27. Nothing about the operation of Schaffer's valve would suggest to a person of ordinary skill in the art that the U-shaped actuating members must be "rigid" or "non-conforming" for Schaffer's valve to function.

27. Accordingly, for the above reasons it is my opinion that Schaffer's U-shaped actuating members collectively constitute a "filament" as recited in the challenged claims of the '011 patent even under Patent Owner's proposed construction of "filament." A person of ordinary skill in the art would have understood that Schaffer's U-shaped actuating members are "a thin, flexible length of material formed by one or more strands of material." Therefore, even if the Board adopts Patent Owner's proposed construction of "filament," it remains my opinion that Schaffer anticipates claims 1-9 of the '011 patent or renders those claims obvious.

B. Schaffer's U-Shaped Actuating Members Circumferentially Constrict The Tubular Member

28. I disagree with Patent Owner's and Dr. Zalesky's assertion that Schaffer's U-shaped actuating members do not "circumferentially constrict" Schaffer's tubular member (what Schaffer calls the seal module). As I explained

in the preceding section, Schaffer's valve in Figures 31-34 uses the exact same sealing mechanism as the bight embodiments of the '011 patent – applying constrictive force to opposing sides of the tubular member via semicircular members or "bights." In both cases, the two semicircular members form an encircled area around the tubular member and collectively act to "circumferentially constrict" the tubular member as they are closed around it.

IV. GROUNDS 3-4: CLAIMS 1-9 OBVIOUS IN VIEW OF SCHAFFER COMBINED WITH HARTLEY OR ELLER

A. Schaffer's Seal Module Would Not Dissuade A Person Of Ordinary Skill From Combining Schaffer With Hartley's String Or Eller's Wire Member

29. As I explained in my prior Declaration, one of the reasons that a person of ordinary skill in the art would have been motivated to substitute Schaffer's U-shaped actuating members for Hartley's string or Eller's wire member is because the string/wire member may form a better seal depending on the precise dimensions and materials of the actuating members. Ex. 1003 (Thornton Decl.) at ¶¶81, 94. Specifically, I explained that Schaffer's U-shaped actuating members may form small gaps between the tool and the valve's lumen when used with tools that do not match the size and shape of the U-shaped actuating members or if the members do not conform sufficiently to the size or shape of the tool inserted, as illustrated in the graphic below:

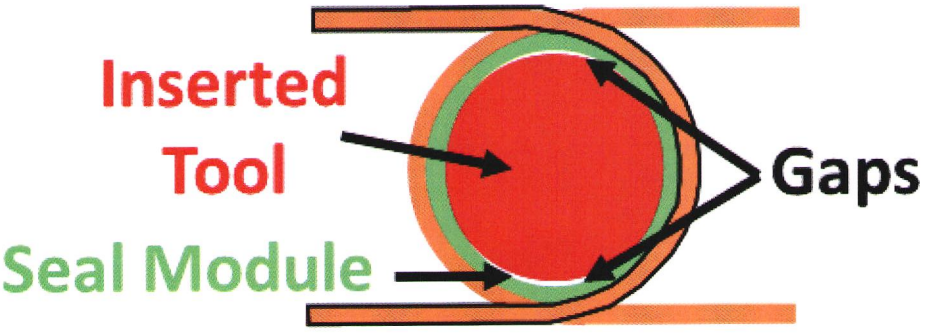

Hartley's string or Eller's wire member may be able to better conform to tools with differing shapes and sizes.

30. Patent Owner and Dr. Zalesky argue that a person of ordinary skill in the art would not have been motivated to modify Schaffer's valve with Hartley's string because Schaffer would not result in gaps and because Schaffer discloses an exemplary embodiment with a "gelatinous" or "sticky" seal module with "selfclosing" properties. I disagree for several reasons.

31. First, even Schaffer recognizes that it may not form a complete seal with the "gelatinous" and "sticky" valves identified by Patent Owner, stating the valves form a "***nearly*** fluid/gas tight seal." Ex. 1005 (Schaffer) at [0059] (emphasis added).

32. Second, Schaffer discloses that the "sticky" or "gelatinous" seal module is an optional feature for some embodiments, but it does not state or suggest that it is required for all embodiments, including the embodiment depicted in Figures 31-34. *See id.* at [0059], [0081]. Moreover, the portion of Schaffer that refers to a "sticky" or "gelatinous" substance refers to embodiments of the valve

having three portions where one of the portions can optionally be made from a "sticky" or "gelatinous" substance having a specific "shore hardness." *Id.* at [0059]; *see also id.* at [0081]. Schaffer discloses many other materials that would not be "sticky" or "gelatinous" that could make up that same portion of the valve, such as modified vinyl, silicone, or polyurethane. *Id.* Nothing in Schaffer suggests that the third valve portion must be made with a "sticky" or "gelatinous" substance in all embodiments.

33. Third, a person of ordinary skill in the art would have recognized that highly "sticky" or "gelatinous" materials would not work well with the seal modules disclosed in Figures 31-34 because those seal modules must "retract to an uncollapsed configuration" when the tension on the module is released by the actuating members. *See id.* at [0077]. A seal module made of very "sticky" or "gelatinous" materials would not have the requisite resilience to return to its uncollapsed configuration. Thus, even if the seal module had some stickiness, a person of ordinary skill in the art would have understood that the seal module cannot be so sticky as to prevent the seal module from retracting to its unsealed state when the constricting force from the actuating members is removed. *See id.*; *see also id.* at [0054] ("The third central seal member 165 is sized and configured to maintain an open lumen 193 when no compressive force 67 is applied.").

34. A person of ordinary skill in the art would have understood that small gaps may form with Schaffer's valve, particularly if the tool inserted through the valve does not match the size or shape of Schaffer's U-shaped actuating members or if the members do not conform sufficiently to the size or shape of the tool inserted. Each of Schaffer's U-shaped actuating members is secured to the actuator buttons at two fixed, spaced-apart points:

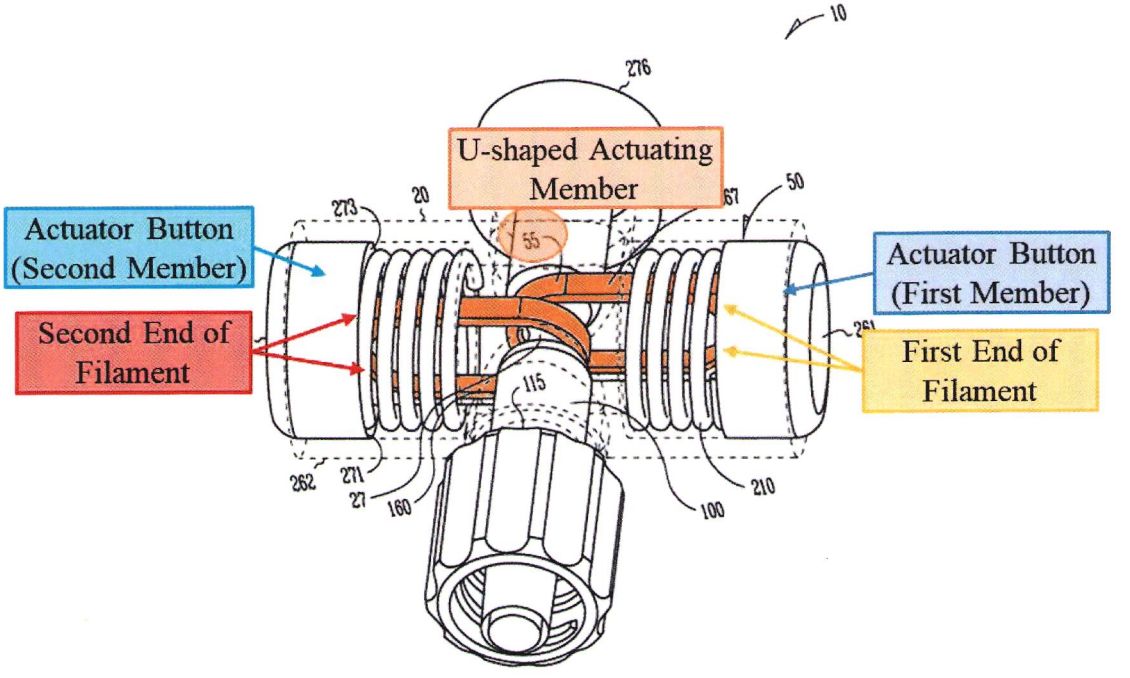

Fig. 31

Id. at Fig. 31. Because of this arrangement, even when the U-shaped actuating members (or bights) are relatively flexible, the fixed attachment points to the actuator buttons may prevent the U-shaped actuating members from completely conforming to the exterior of a tool with a smaller diameter than the distance

between the attachment points, as I've illustrated below:

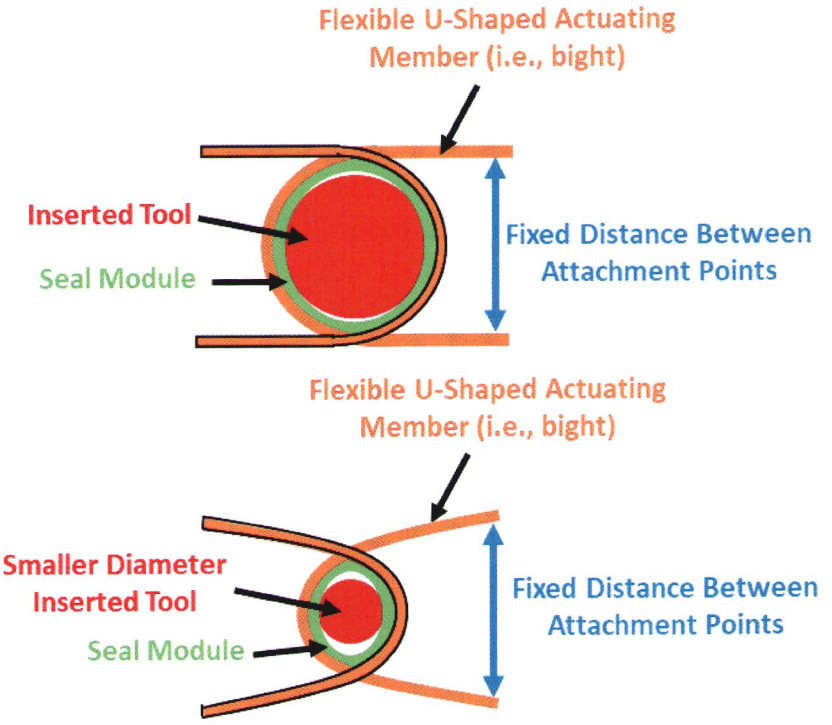

Because Hartley's string or Eller's wire member would be wrapped around Schaffer's seal module with each respective end secured to the opposing actuator buttons, the string/wire member would be better able to conform to the varying diameter tools in this situation:

35. I see that Patent Owner argues that Schaffer's valve with Hartley's string or Eller's wire would seal "less effectively" when two instruments are inserted through the valve. Patent Owner Response at 52. Patent Owner cites to Schaffer's disclosure of an embodiment with sealing member that is "so compliant that it forms a seal around the instruments 260 even if the instruments 260 are irregularly shaped." Ex. 1005 at [0068]. This particular disclosure appears in the section of Schaffer referring to Figures 12-15 (not Figure 30-34), which describes a three-piece valve that closes as a result of "pressure from the antegrade flow 272," not an actuator. *Id.* at [0068]-[0069]; *see also id.* at [0063] (referencing Figures 12-15). Clearly, this embodiment operates differently than the embodiment in Figures 30-34. *See id.* at [0069] ("While this arrangement may not be as friction-less as the other embodiments using an actuator 50, it may offer the advantages of 'hands-free' operation."). Patent Owner also provides the following illustration as alleged support for its argument:

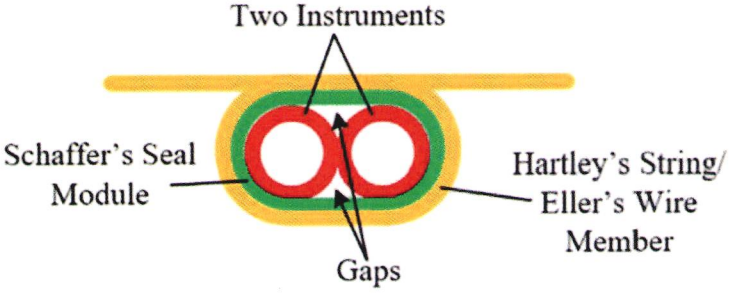

Patent Owner Response at 52. Patent Owner's illustration does not depict the compliant sealing member described in Schaffer's Paragraph [0068]. The sealing

member depicted in Patent Owner's illustration is not " so compliant that it forms a seal around the instruments 260 even if the instruments 260 are irregularly shaped." In addition, Patent Owner does not explain how the illustration would be any different if the string/wire member were replaced with two U-shaped actuating members. Because of the non-compliant seal depicted in the illustration, the same gaps would exist with U-shaped actuating members. Accordingly, Patent Owner's illustration is not representative of Schaffer's valve and does not demonstrate that Schaffer's valve would work less effectively with a string/wire member.

36. Accordingly, for the above reasons and the reasons I explained in my prior Declaration (Ex. 1003), it is my opinion that a person of ordinary skill in the art would have been motivated to substitute Schaffer's U-shaped actuating members with Hartley's string or Eller's wire member, and they would have reasonably expected success in doing so.

37. I note that both Patent Owner and Dr. Zalesky focus their arguments on whether Schaffer's valve would result in small gaps in certain situations. *See* Patent Owner Response at 46-52; Ex. 2008 (Zalesky Supp. Decl.) at ¶¶129-158. However, the possibility for Schaffer's valve to result in gaps is only one of the motivations that a person of skill would have had for combining Schaffer with Hartley or Eller. *See* Ex. 1003 (Thornton Decl.) at ¶¶80-83, 93-96. As I

Imperative EX1014

explained in my previous Declaration, a person of ordinary skill would have had several additional motivations for making this combination, including the fact that there were a finite number of ways to constrict the resilient material in a stasis valve to create a seal in September 2017, which included Hartley's single string, Eller's one or more wire members, and Schaffer's two U-shaped actuating members. *Id.* at ¶¶83, 96. Given the finite number of predictable options, a person of ordinary skill would have found it obvious to try each of these known materials according to the needs of their particular application, and they would have reasonably expected success in implementing them. *Id.*

B. Substituting Schaffer's U-Shaped Actuating Members With Hartley's String Or Eller's Wire Member Would Not Change Schaffer's Principles Of Operation

38. As I explained in my previous Declaration, the hemostasis valves in Schaffer, Hartley, and Eller all function in similar, predictable ways to constrict the lumen of their valves and form a seal. In Schaffer, the U-shaped actuating members constrict the seal module when they are pulled in opposite directions by the compression springs. Ex. 1005 (Schaffer) at [0077]. Hartley and Eller also constrict their valves by pulling the ends of the string/wire member in opposite directions when their actuators are rotated. Ex. 1006 (Hartley) at [0031]; Ex. 1007 (Eller) at 15:21-40, 17:47-18:3, Figs. 10A-10C. In all three prior art references, the hemostasis valves are unsealed by relaxing the tensioning force on the

actuating member/string/wire member. In Schaffer, this is accomplished by depressing the actuator buttons. Ex. 1005 (Schaffer) at [0077]. In Hartley and Eller, this is accomplished by rotating the actuator to the first, relaxed state. Ex. 1006 (Hartley) at [0031]; Ex. 1007 (Eller) at 15:21-40, 17:47-18:3.

39. Given the similarities in the sealing mechanisms employed by Schaffer, Hartley, and Eller, a person of ordinary skill would have reasonably expected that Schaffer's valve would function with the same principles of operation when the U-shaped actuating members are replaced with Hartley's string or Eller's wire member. When Schaffer's actuator buttons are undepressed, the compression springs would pull each respective end of the string/wire member in opposite directions, causing the string/wire member to constrict Schaffer's seal module and seal the valve. When the actuator buttons are depressed, the tensioning force from the compression springs would be relaxed, allowing the string/wire member to loosen and disengage (i.e., release the constricting force) the seal module, permitting the seal module return to its open, unsealed state.

40. Patent Owner and Dr. Zalesky assert that substituting Schaffer's U-shaped actuating members with Hartley's string or Eller's wire member would "change Schaffer's principles of operation." Patent Owner and Dr. Zalesky provide three rationales for why they believe this to be the case: (1) Hartley's string and Eller's wire member would not "forcibly disengage" from Schaffer's

seal module, (2) Hartley's string and Eller's wire member would prevent "easy assembly" of Schaffer's valve, and (3) Hartley's string and Eller's wire member would reduce the durability of Schaffer's valve. *See* Patent Owner Response at 52-60; Ex. 2008 (Zalesky Supp. Decl.) at §§VIII.E-F. I disagree with each of these assertions for the reasons I explain below.

1. Hartley's String Or Eller's Wire Member Would Not Prevent "Forcible Disengagement" From Schaffer's Seal Module

41. I disagree with Patent Owner's contention that depressing Schaffer's actuator buttons would not allow Hartley's string or Eller's wire member to "forcibly disengage opposing outer walls 27 of the seal module 100 allowing the portion 108 of the containment structure 160 to retract to an uncollapsed configuration." Ex. 1005 (Schaffer) at [0077]. The description in Schaffer that the actuating members "forcibly disengage opposing outer walls of the seal module 100" does not mean that the actuating members do not remain in contact with the seal module. As shown in Figure 34 above, the actuating members are still in contact with the seal module 100 even after being forcibly disengaged. Rather, the term "forcibly disengage" refers to the act of applying force to the buttons to release the tension created by the actuating members on the seal module, which in turn allows the seal module "to retract to an uncollapsed configuration where gases and fluids can pass therethrough." Ex. 1005 (Schaffer) at [0077], Fig. 34. Schaffer's buttons move inwardly when force is applied,

releasing tension on the actuating members (filaments) and allowing the seal module/tubular member to retract to an uncollapsed configuration, the exact same way that the '011 patent's filament does.

2. Hartley's String Or Eller's Wire Member Would Not Prevent Assembly Of Schaffer's Valve

42. Patent Owner and Dr. Zalesky argue that Hartley's string or Eller's wire member would "introduce assembly difficulties" to Schaffer's valve and would prevent assembly of the valve using the exemplary steps provided in paragraph 83 of Schaffer. I disagree.

43. First, I note that Schaffer does not claim to be easy to manufacture or assemble.

44. Second, Schaffer states that the assembly steps in paragraphs 82-83 are "one option" or "an example." Ex. 1005 (Schaffer) at [0082]-[0083]. Schaffer does not state or suggest that the exemplary processes described in paragraphs 82-83 are the only way to assemble the valve.

45. Third, as I explained during my deposition in the Litigation, Hartley's string or Eller's wire member would not have made Schaffer's valve so much more difficult to manufacture that it would have discouraged a person of ordinary skill in the art from making the combination. A person of ordinary skill in the art would have known of many ways to assemble the valve with the string or wire member. For example, a tapered fixture could be used to introduce the

seal module through the looped string/wire member that is already attached to the buttons. Alternatively, the seal module could be positioned in the valve and the string/wire member could be looped around the module, then the springs and buttons inserted before the string/wire member is attached to the buttons. Schaffer's housing could also be formed from two detachable pieces, which would allow the internal components of the valve to be assembled prior to closing the housing. After the string/wire member and seal module are assembled, the housing could then be secured through well-known means such as adhesives, screws, or clips.

46. Notably, the '011 patent is silent on how its disclosed hemostasis valves can or should be assembled. The '011 patent therefore presumes that it would have been within the capabilities of a person of ordinary skill in the art to determine how to assemble its valves. Thus, the '011 patent is consistent with my opinion that a person of ordinary skill in the art would have known of many ways to assemble a hemostasis valve with a string or wire member like the valve that would result from the combination of Schaffer and Hartley or Eller.

47. Fundamentally, Schaffer's valve uses simple, predictable components and a person of skill would have had ample training and experience to manufacture the valve using Hartley's string or Eller's wire member.

3. Hartley's String Or Eller's Wire Member Would Not Weaken The Durability Of Schaffer's Valve

48. I disagree with Patent Owner's assertion that substituting Schaffer's U-shaped actuating members with Hartley's string or Eller's wire member would weaken the durability of Schaffer's valve. Hartley and Eller use the string/wire member for the same purpose they would be used in Schaffer's valve and neither suggests any issues with durability. In addition, a person of ordinary skill in the art in 2017 would have known of many durable materials that could be used to form a string or wire for use in a medical device, such as polypropylene or other suture material. Accordingly, to the extent that a person of ordinary skill in the art was concerned about the durability of the valve, they could have simply used one of the known, durable materials to form the string/wire member. Durability concerns would not have dissuaded a person of ordinary skill in the art from substituting Schaffer's U-shaped actuating members with Hartley's string or Eller's wire member.

49. I also note that the same durability concerns that Patent Owner raises for Hartley's string or Eller's wire member would apply equally to the filaments disclosed in the '011 patent. Therefore, I do not believe that durability provides any basis to distinguish the '011 patent from the prior art.

V. CONCLUSION

50. For the above reasons and the reasons I explained in my previous Declaration (Ex. 1003), it is my opinion that challenged claims 1-9 of the '011 patent are unpatentable because they are anticipated or obvious in view of the prior art.

51. I declare that the foregoing is true and correct, and further that the foregoing statements were made with the knowledge that willful, false statements and the like so made are punishable by fine or imprisonment, or both, under Section 1001 of Title 18 of the United States Code.

Executed on July 11, 2025 in San Francisco, CA.

troy thornton

Troy Thornton