US 20040002843A1

(19) United States

(12) Patent Application Publication (10) Pub. No.: US 2004/0002843 A1

Robarts et al. (43) Pub. Date: Jan. 1, 2004

(54) METHOD AND SYSTEM FOR INTERACTING WITH SIMULATED PHENOMENA

(75) Inventors: **James O. Robarts**, Redmond, WA (US); **Cesar A. Alvarez**, Kirkland, WA (US)

Correspondence Address:
SEED INTELLECTUAL PROPERTY LAW GROUP PLLC
701 FIFTH AVE
SUITE 6300
SEATTLE, WA 98104-7092 (US)

(73) Assignee: **Consolidated Global Fun Unlimited, LLC**, Redmond, WA

(21) Appl. No.: **10/438,172**

(22) Filed: **May 13, 2003**

Related U.S. Application Data

(60) Provisional application No. 60/380,552, filed on May 13, 2002.

Publication Classification

(51) **Int. Cl.**[7] **G06F 17/50**

(52) **U.S. Cl.** **703/13**

(57) **ABSTRACT**

Methods and systems for interacting with simulated phenomena are provided. Example embodiments provide a Simulated Phenomena Interaction System "SPIS," which enables a user to incorporate simulated phenomena into the user's real world environment by interacting with the simulated phenomena. In one embodiment, the SPIS comprises a mobile environment (e.g., a mobile device) and a simulation engine. The mobile environment may be configured as a thin client that remotely communicates with the simulation engine, or it may be configured as a fat client that incorporates one or more of the components of the simulation engine into the mobile device. These components cooperate to define the characteristics and behavior of the simulated phenomena and interact with users via mobile devices. The characteristics and behavior of the simulated phenomena are based in part upon values sensed from the real world, thus achieving a more integrated correspondence between the real world and the simulated world. Interactions, such as detection, measurement, communication, and manipulation, typically are initiated by the mobile device and responded to by the simulation engine based upon characteristics and behavior of the computer-generated and maintained simulated phenomena.

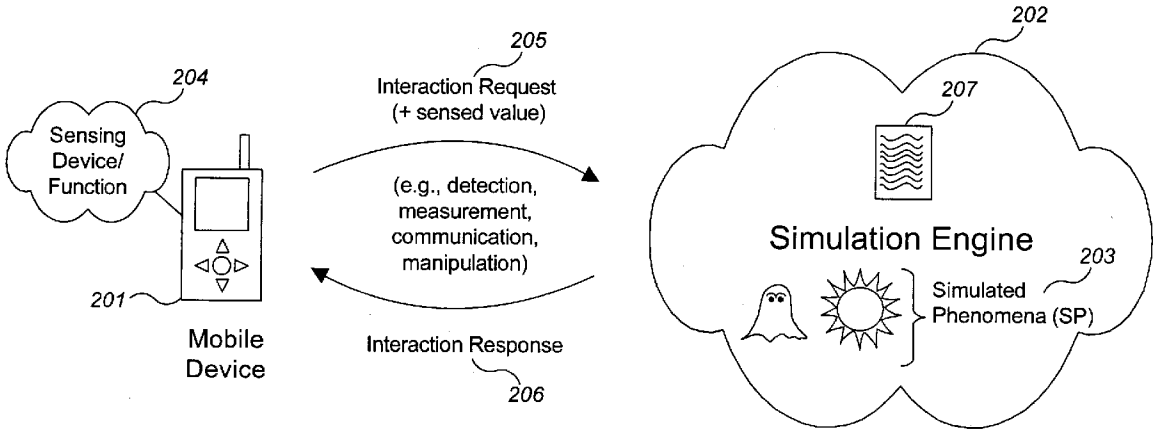

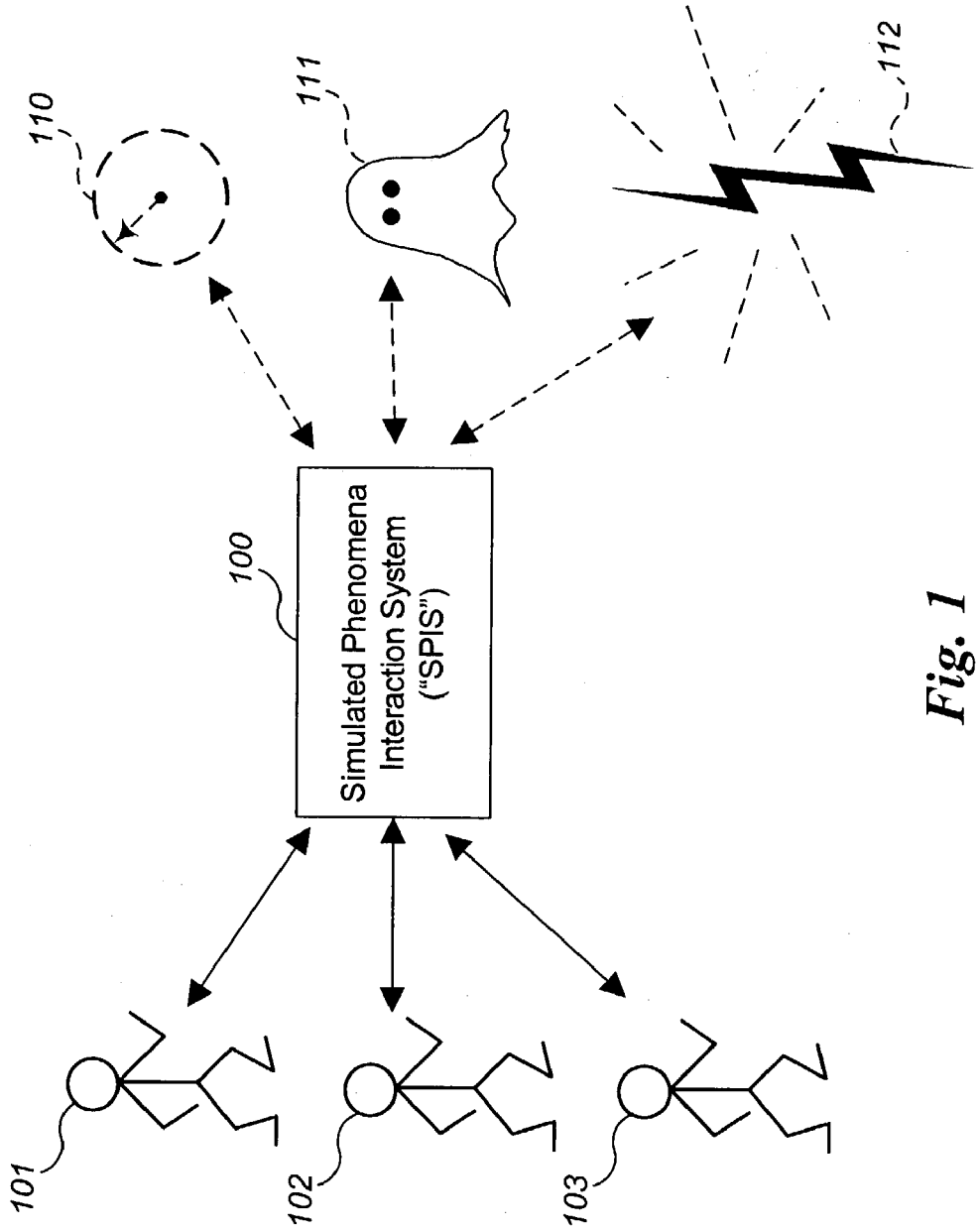
110
111
112
100
Simulated Phenomena Interaction System ("SPIS")
101
102
103

Fig. 1

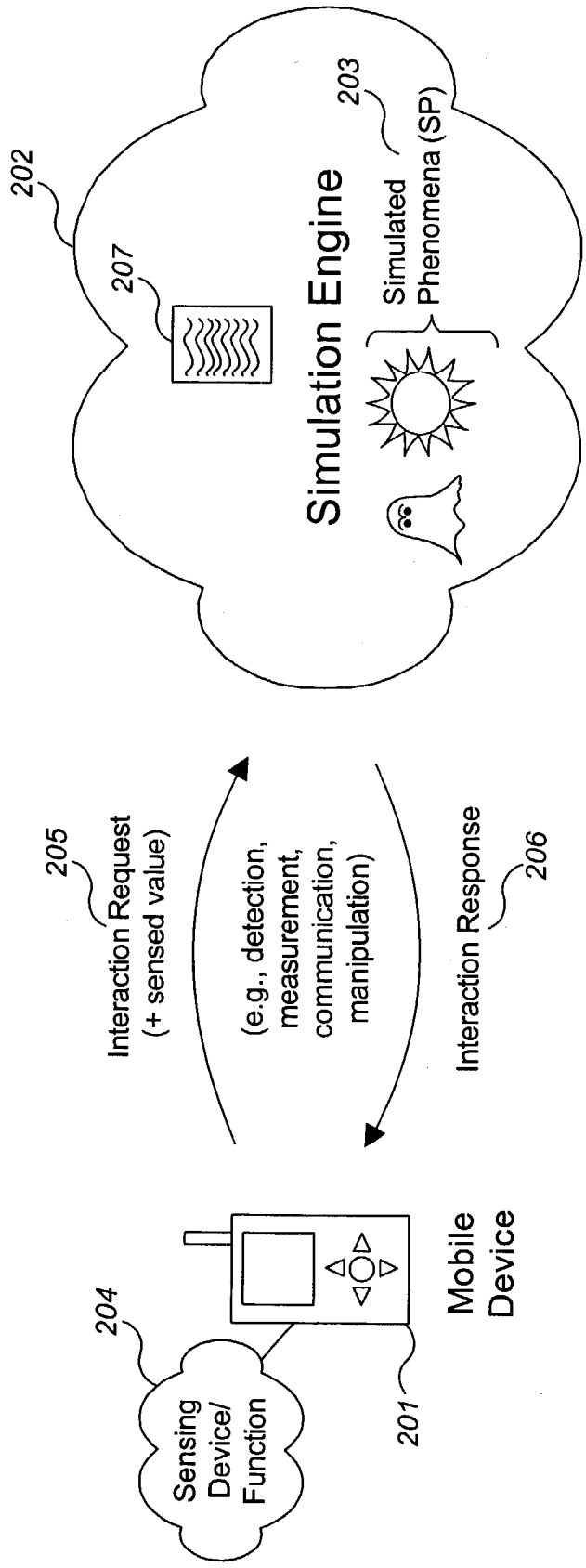
202
207
Simulation Engine
203
Simulated Phenomena (SP)
205
Interaction Request (+ sensed value)
(e.g., detection, measurement, communication, manipulation)
Interaction Response
206
204
Sensing Device/ Function
201
Mobile Device

Fig. 2

Detection & Measurement

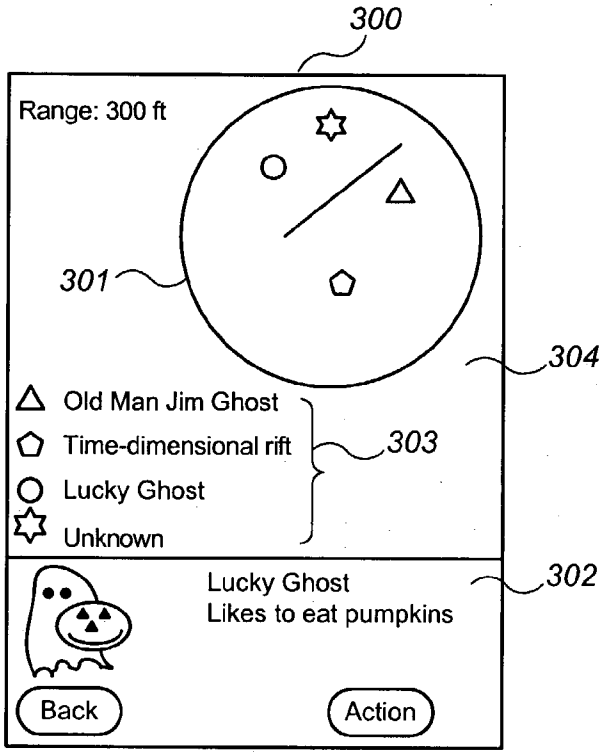

Fig. 3

Communication

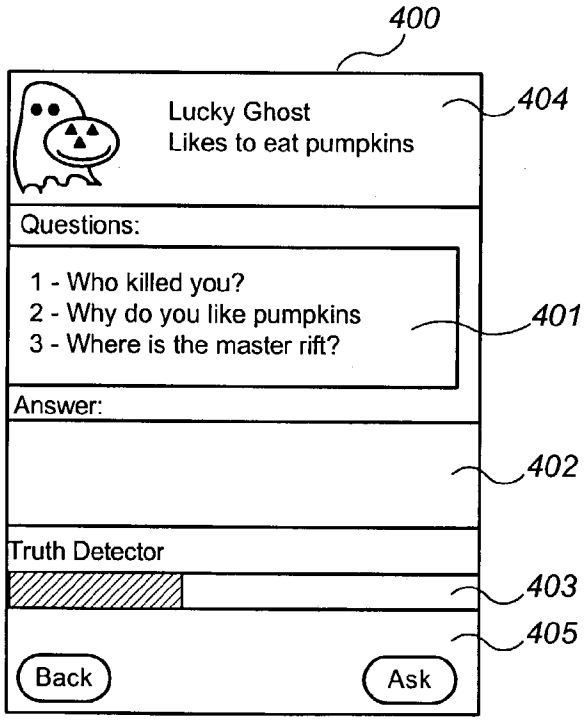

Fig. 4

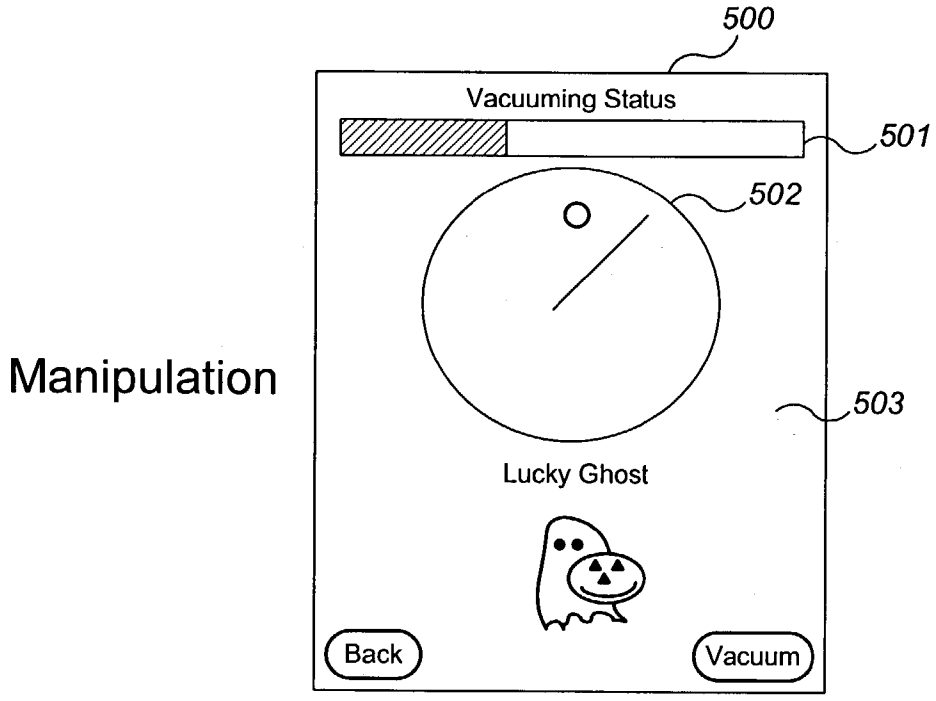
500
Vacuuming Status
501
502
Manipulation
503
Lucky Ghost
Back
Vacuum

Fig. 5

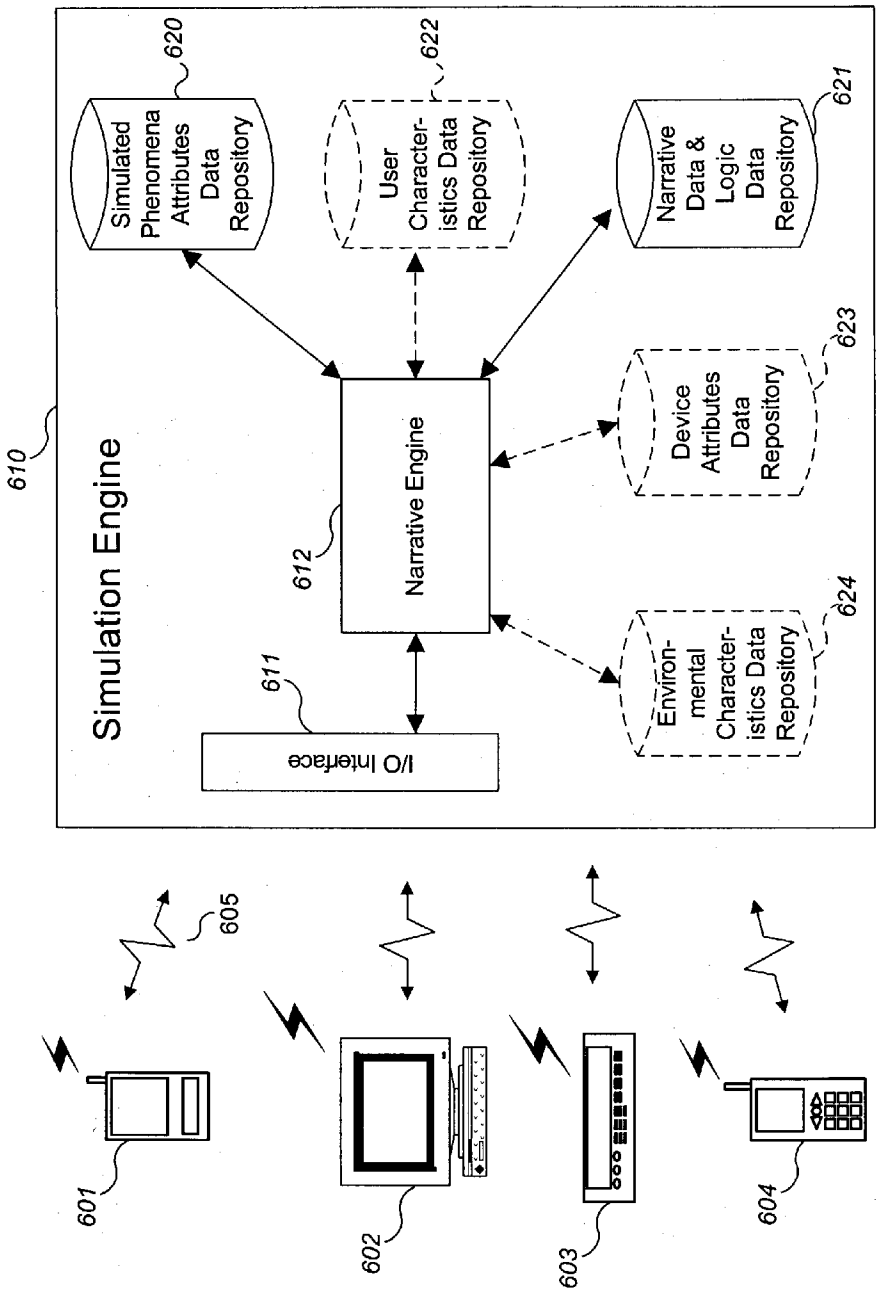
610
Simulation Engine
620
Simulated Phenomena Attributes Data Repository
622
User Character-istics Data Repository
621
Narrative Data & Logic Data Repository
612
Narrative Engine
623
Device Attributes Data Repository
611
I/O Interface
624
Environ-mental Character-istics Data Repository
605
601
602
603
604

Fig. 6

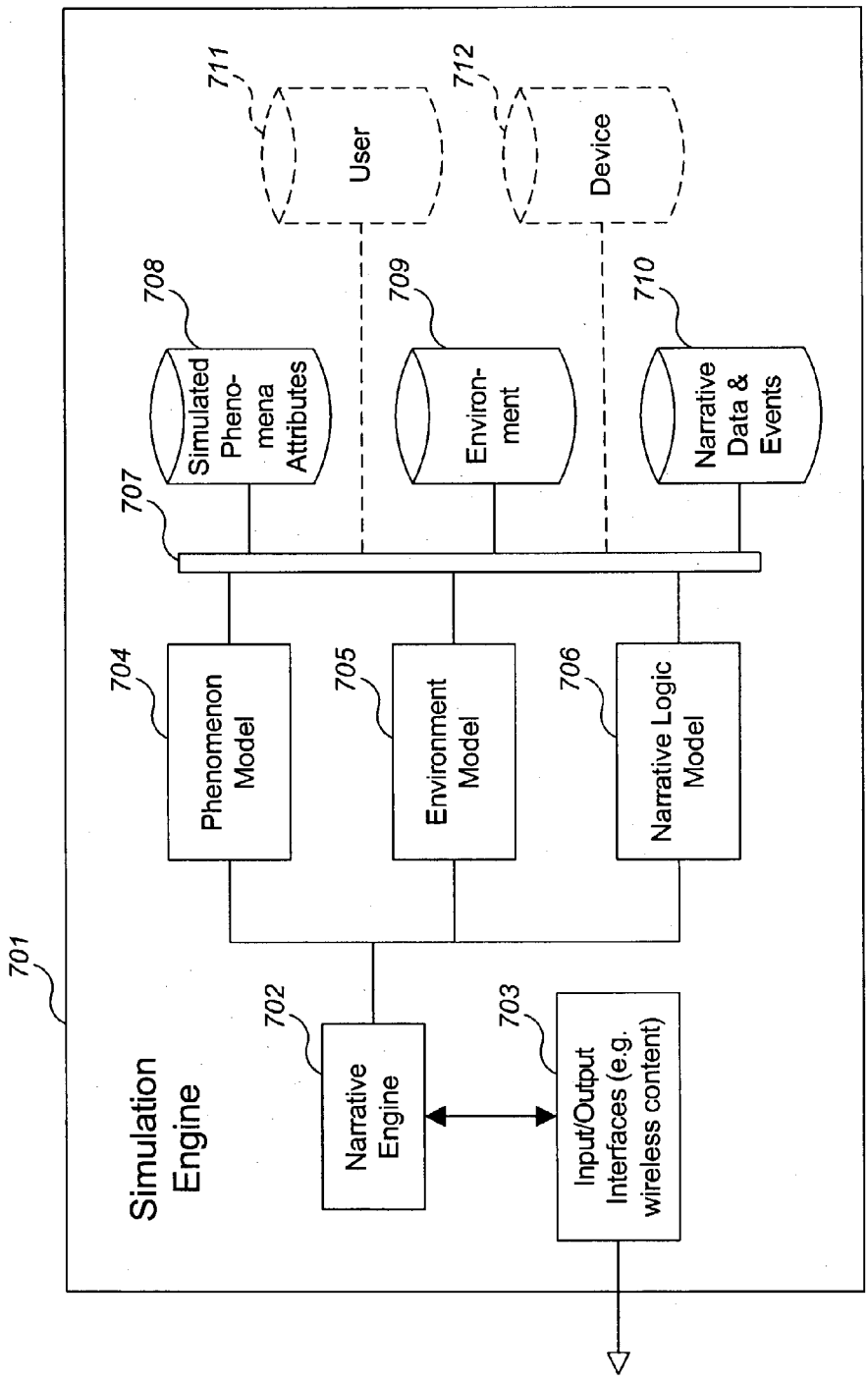
701
Simulation Engine
702
Narrative Engine
703
Input/Output Interfaces (e.g. wireless content)
704
Phenomenon Model
705
Environment Model
706
Narrative Logic Model
707
708
Simulated Pheno-mena Attributes
709
Environ-ment
710
Narrative Data & Events
711
User
712
Device

Fig. 7

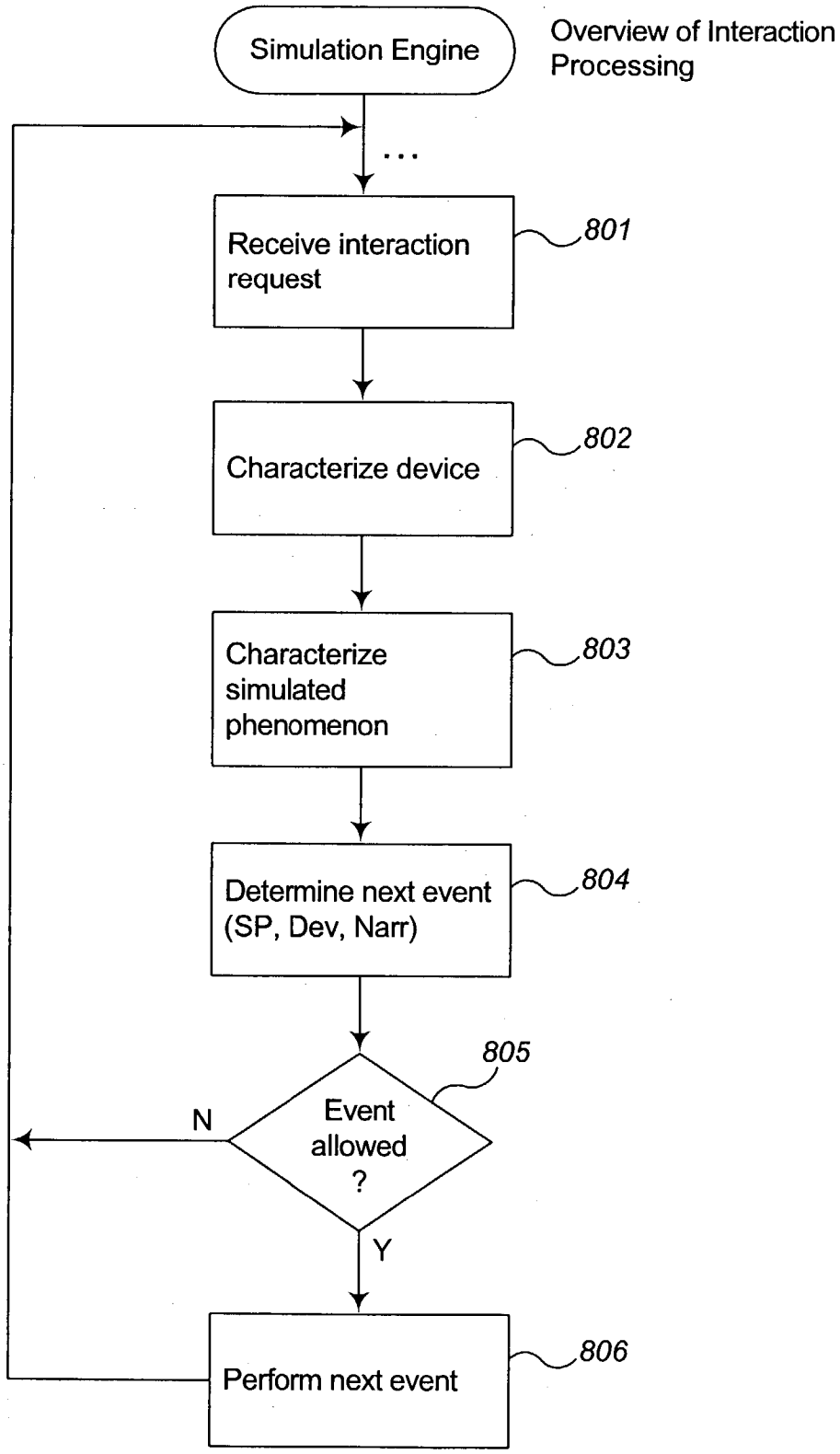
Simulation Engine
Overview of Interaction Processing
...
Receive interaction request
801
Characterize device
802
Characterize simulated phenomenon
803
Determine next event (SP, Dev, Narr)
804
Event allowed ?
805
N
Y
Perform next event
806

Fig. 8

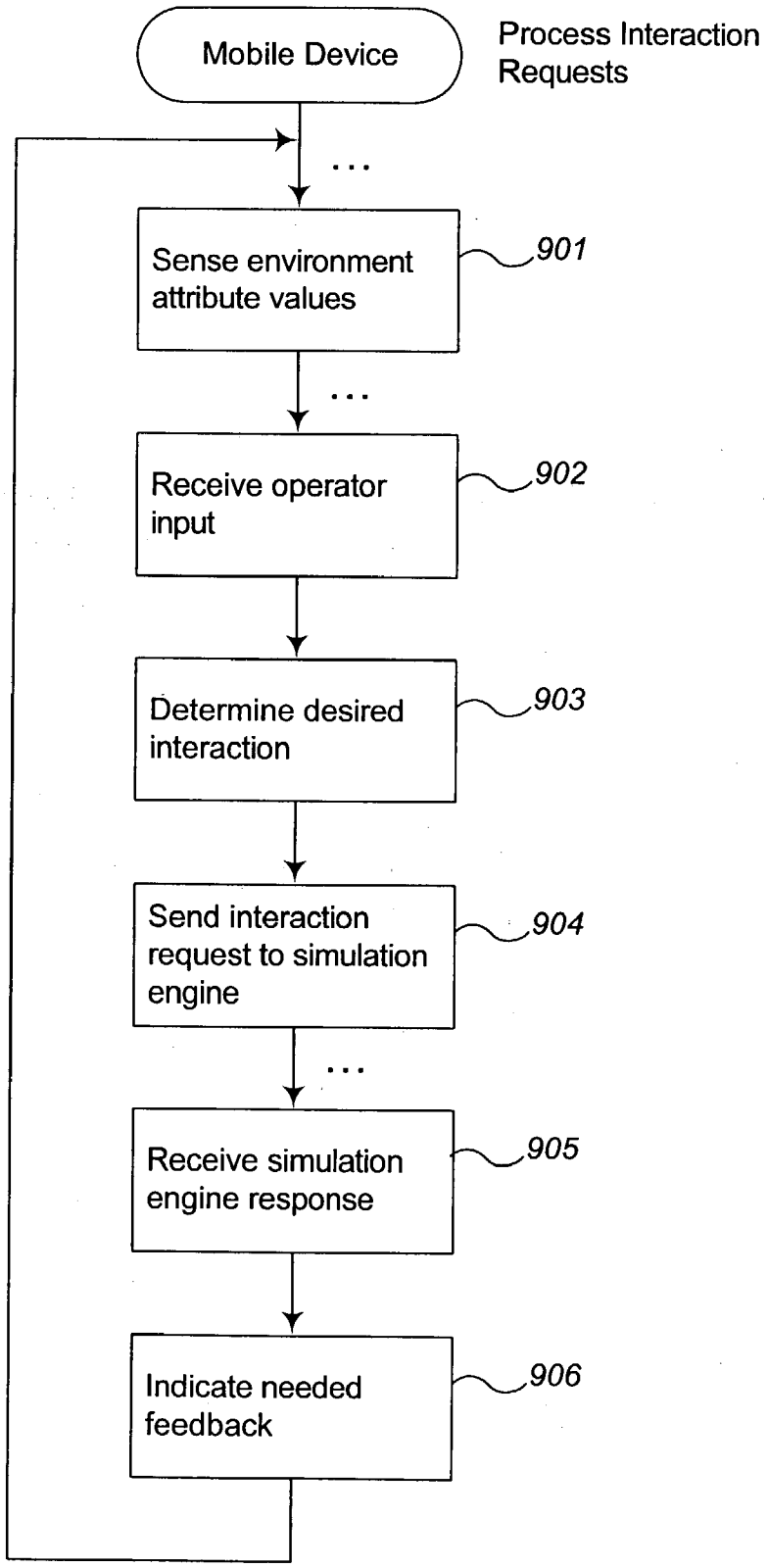
Mobile Device
Process Interaction Requests
Sense environment attribute values
901
Receive operator input
902
Determine desired interaction
903
Send interaction request to simulation engine
904
Receive simulation engine response
905
Indicate needed feedback
906

Fig. 9

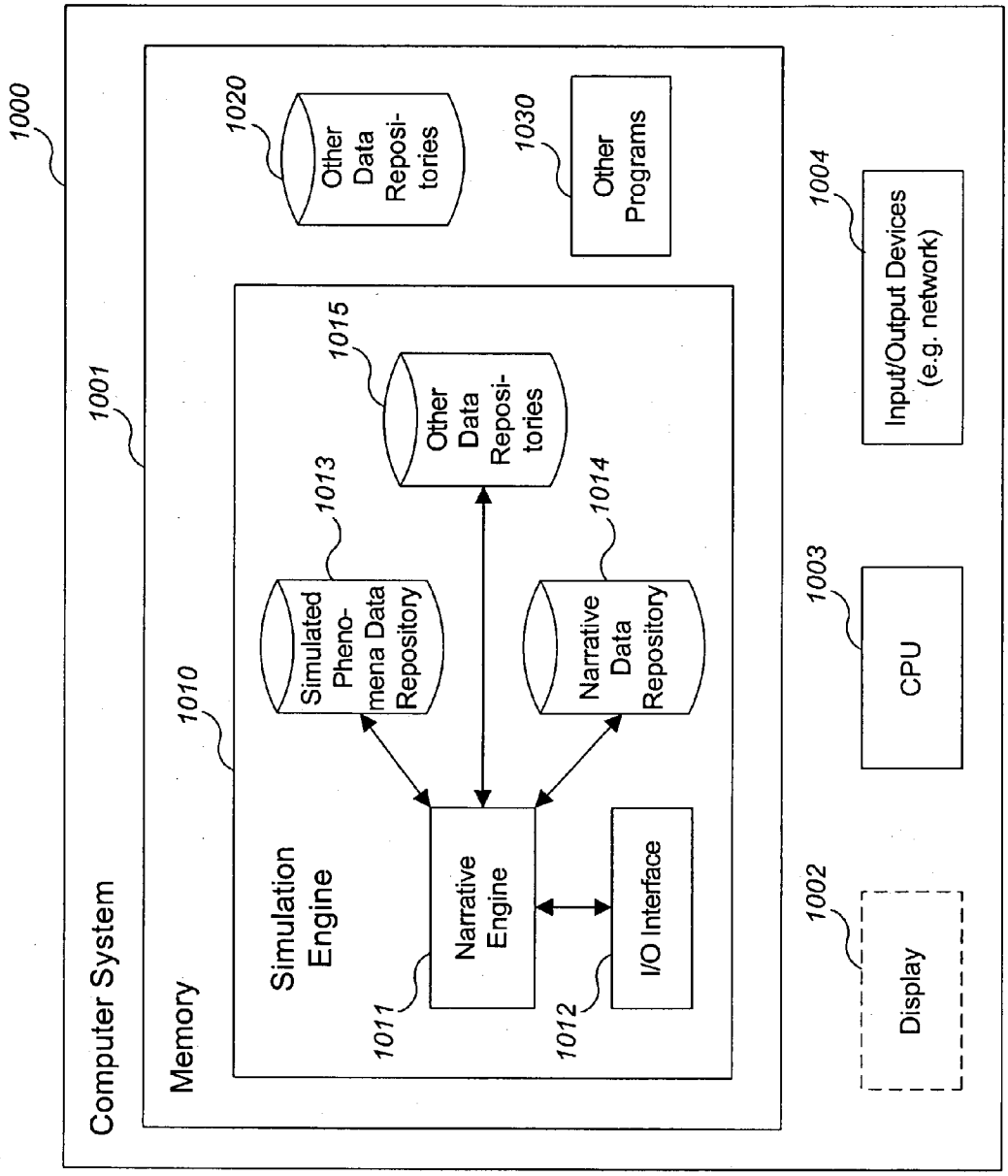
1000
Computer System
1001
Memory
1010
Simulation Engine
1011
Narrative Engine
1012
I/O Interface
1013
Simulated Pheno-mena Data Repository
1014
Narrative Data Repository
1015
Other Data Reposi-tories
1020
Other Data Reposi-tories
1030
Other Programs
1002
Display
1003
CPU
1004
Input/Output Devices (e.g. network)

Fig. 10

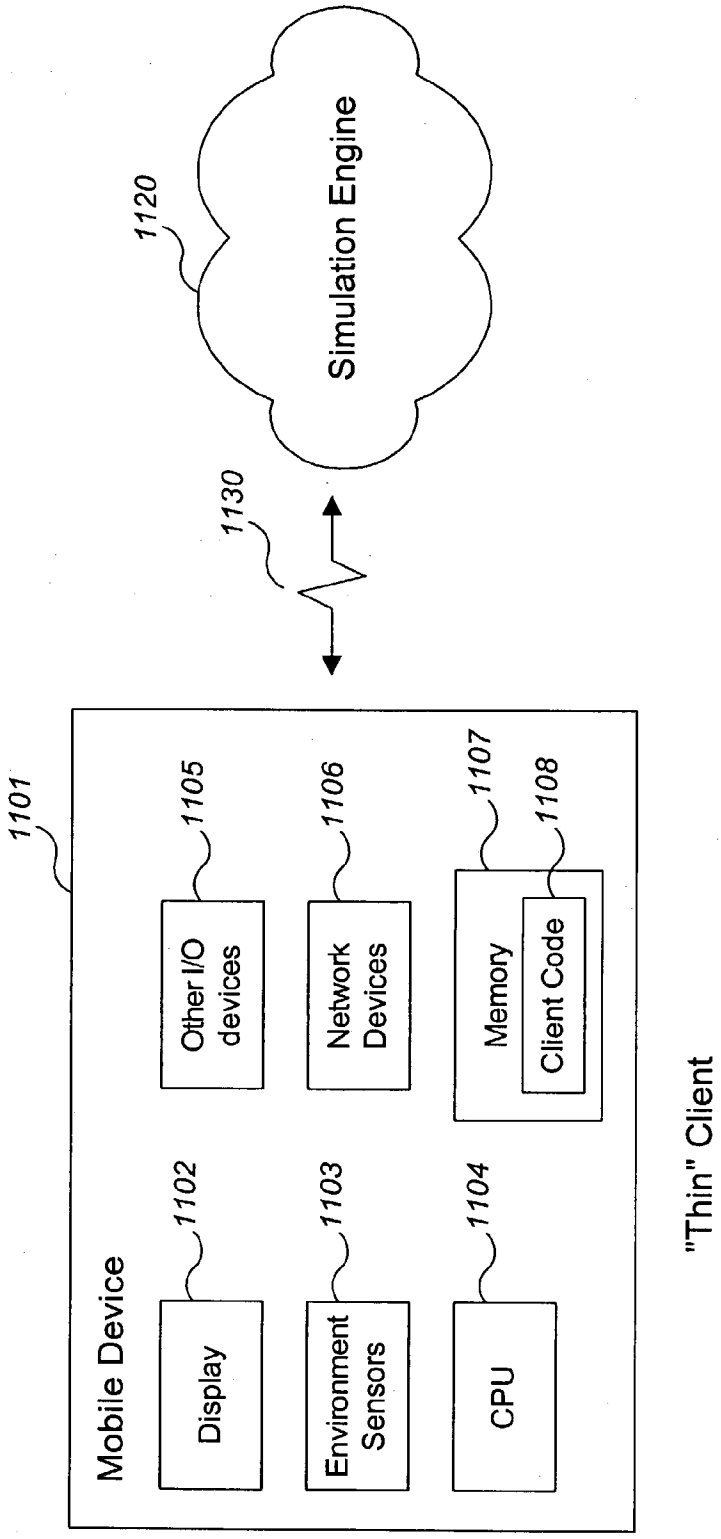
1120
Simulation Engine
1130
1101
Mobile Device
1102
Display
1103
Environment Sensors
1104
CPU
1105
Other I/O devices
1106
Network Devices
1107
Memory
1108
Client Code
"Thin" Client

Fig. 11

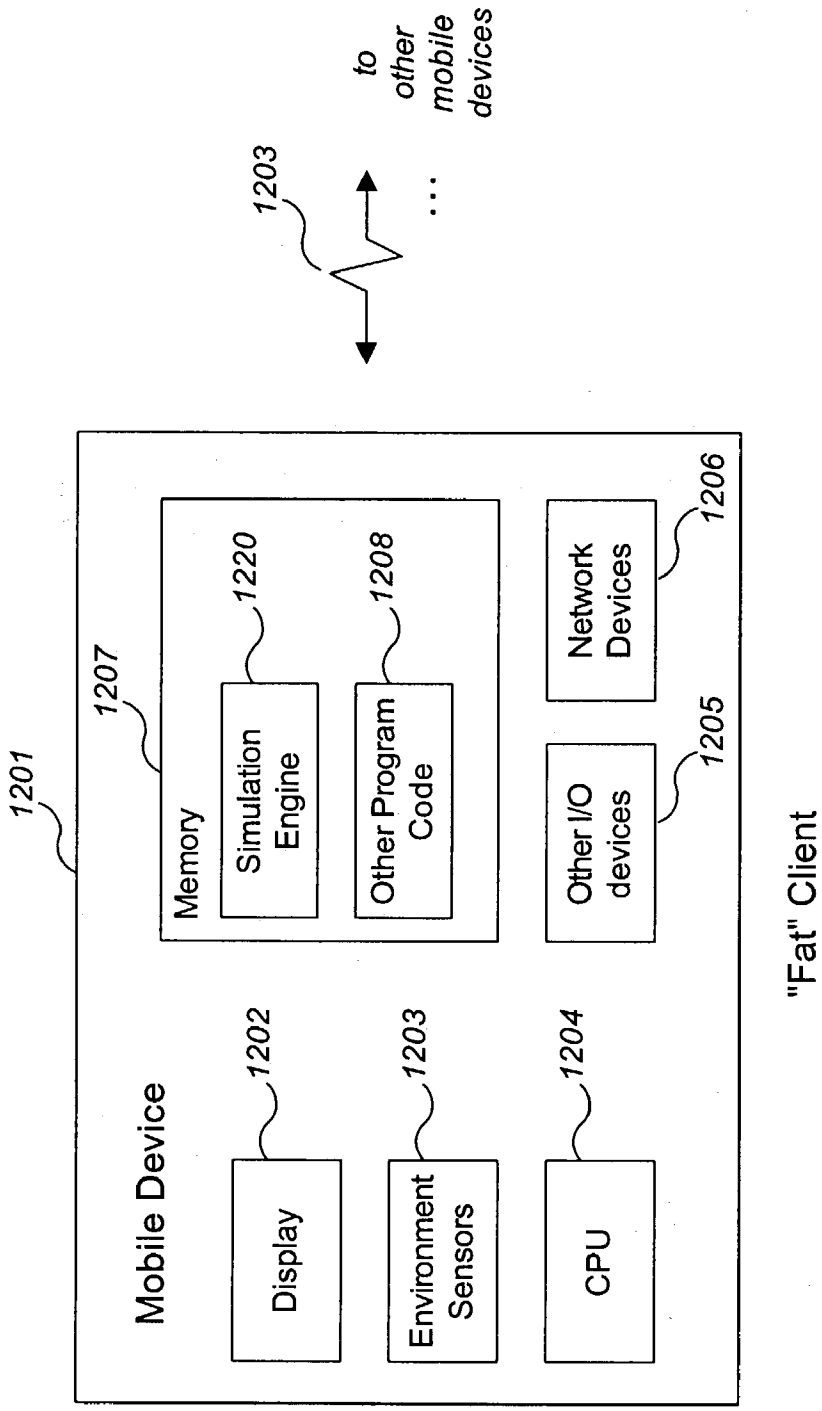
1201
Mobile Device
1202
Display
1203
Environment Sensors
1204
CPU
1207
Memory
1220
Simulation Engine
1208
Other Program Code
1205
Other I/O devices
1206
Network Devices
1203
to other mobile devices
"Fat" Client

Fig. 12

Fig. 13

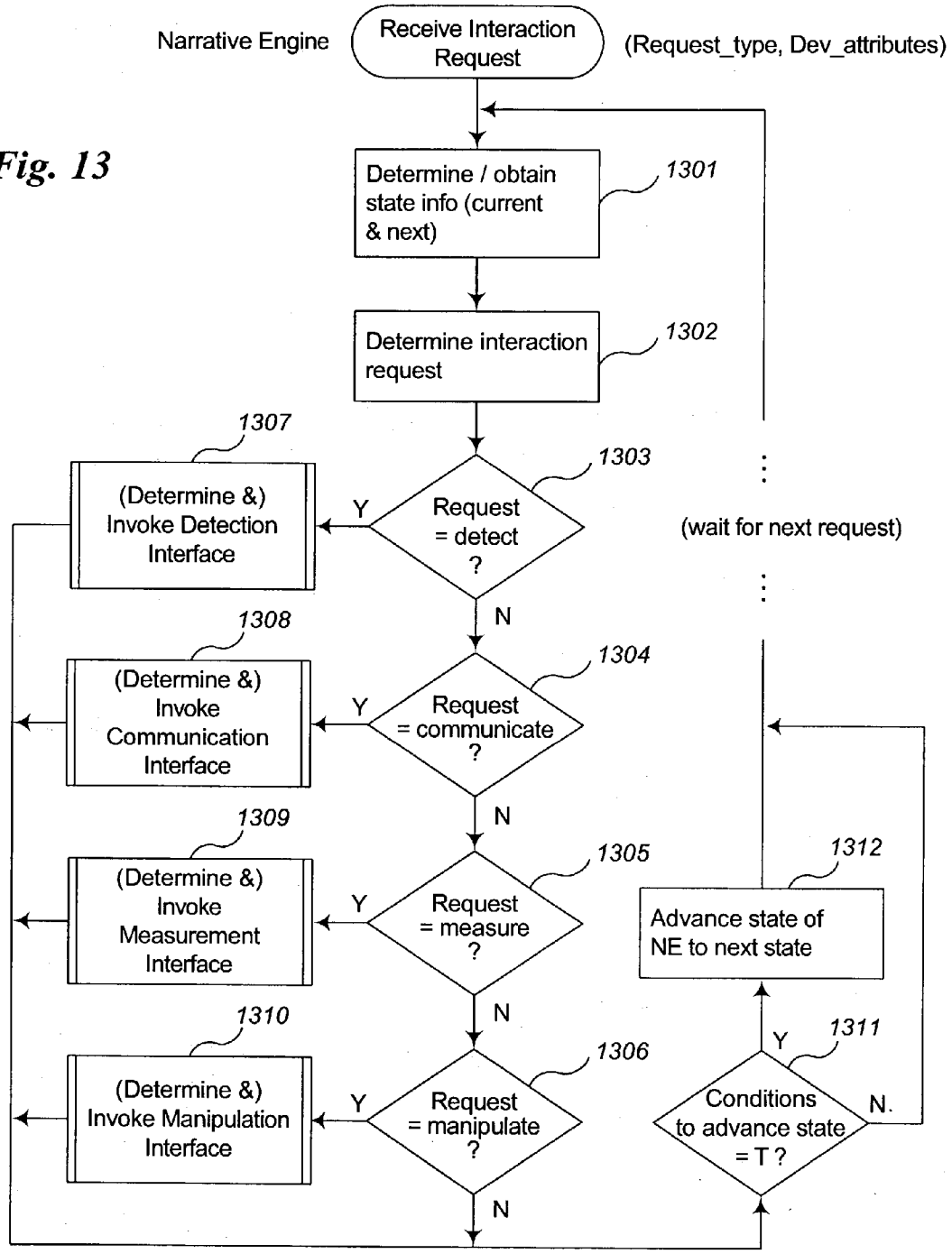
Narrative Engine
Receive Interaction Request
(Request_type, Dev_attributes)
Determine / obtain state info (current & next)
1301
Determine interaction request
1302
1303
Request = detect ?
Y
N
(Determine &) Invoke Detection Interface
1307
(wait for next request)
1304
Request = communicate ?
Y
N
(Determine &) Invoke Communication Interface
1308
1305
Request = measure ?
Y
N
(Determine &) Invoke Measurement Interface
1309
1306
Request = manipulate ?
Y
N
(Determine &) Invoke Manipulation Interface
1310
1311
Conditions to advance state = T ?
Y
N.
1312
Advance state of NE to next state

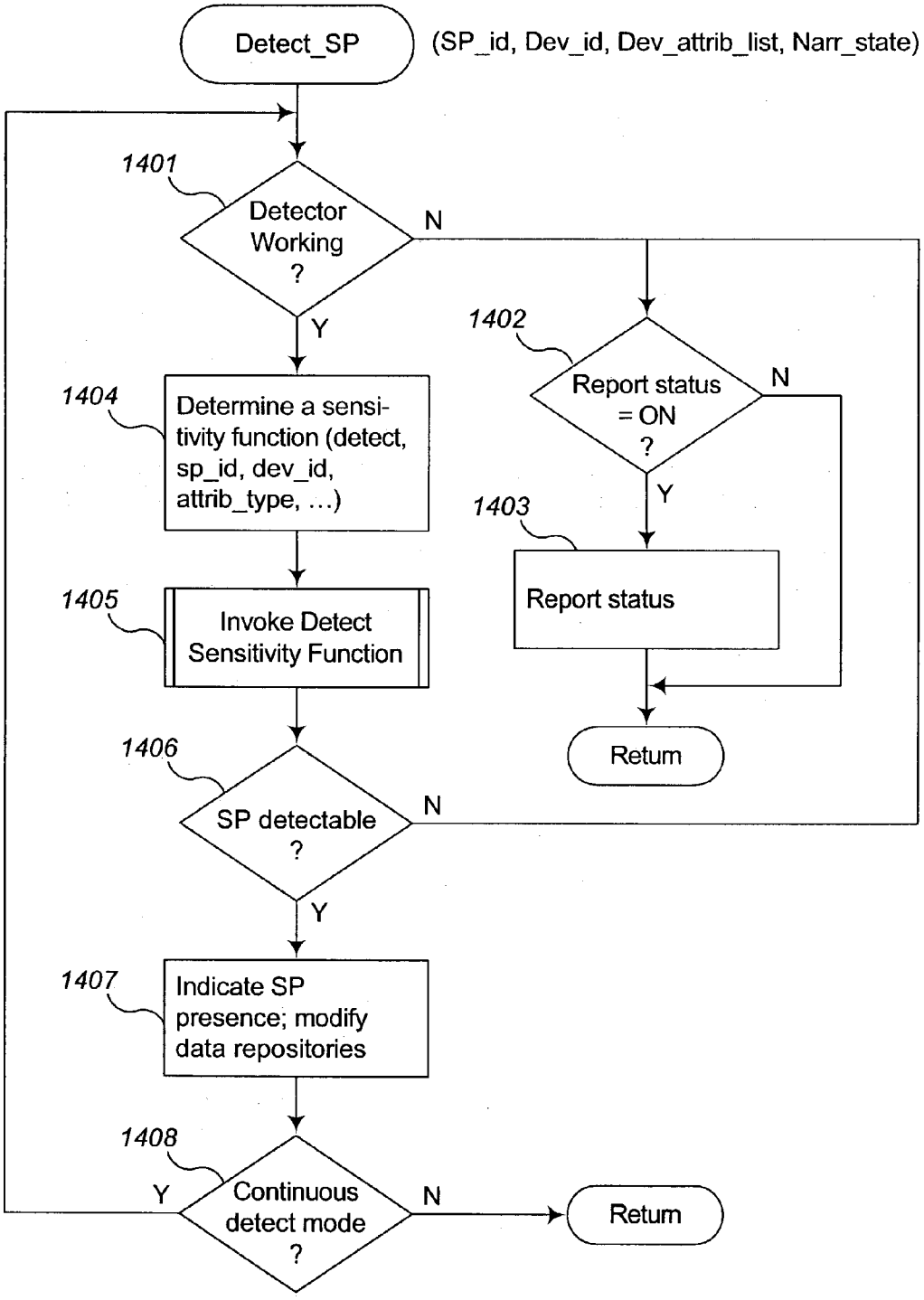
Detect_SP
(SP_id, Dev_id, Dev_attrib_list, Narr_state)
1401
Detector Working ?
N
Y
1402
Report status = ON ?
N
Y
1404
Determine a sensitivity function (detect, sp_id, dev_id, attrib_type, ...)
1403
Report status
1405
Invoke Detect Sensitivity Function
Return
1406
SP detectable ?
N
Y
1407
Indicate SP presence; modify data repositories
1408
Continuous detect mode ?
Y
N
Return

Fig. 14

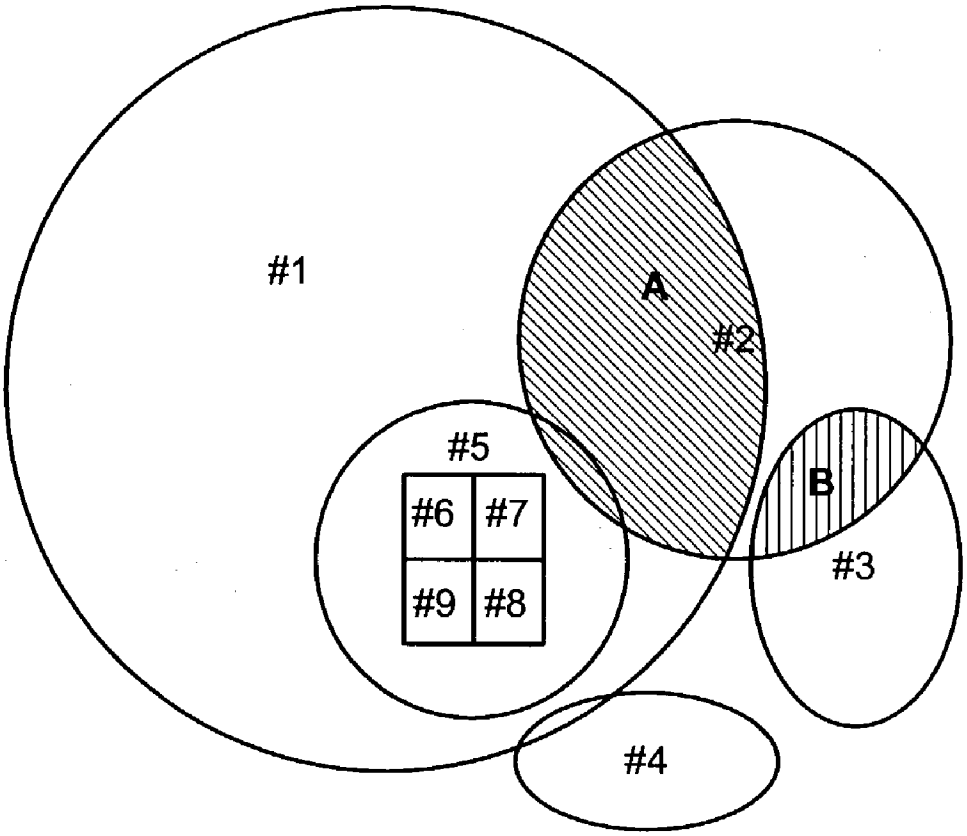

Fig. 15

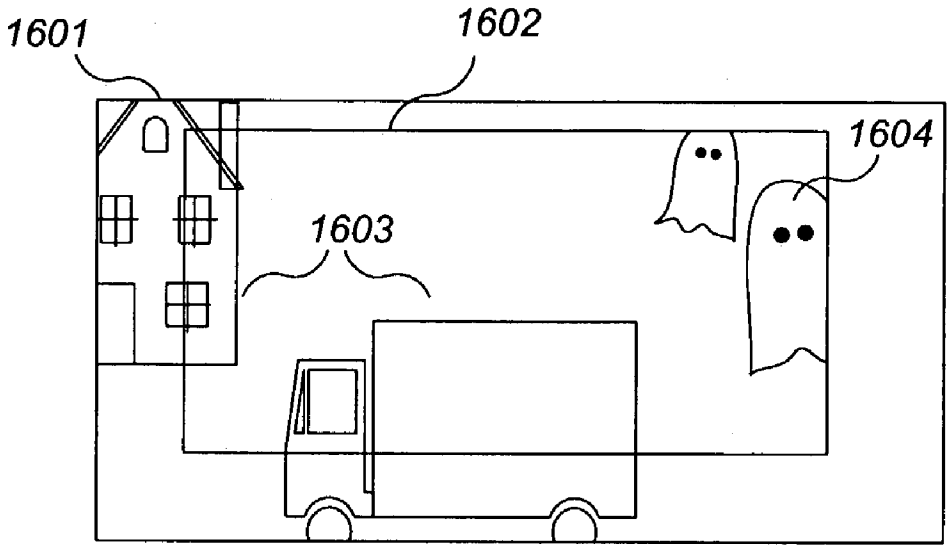

Fig. 16

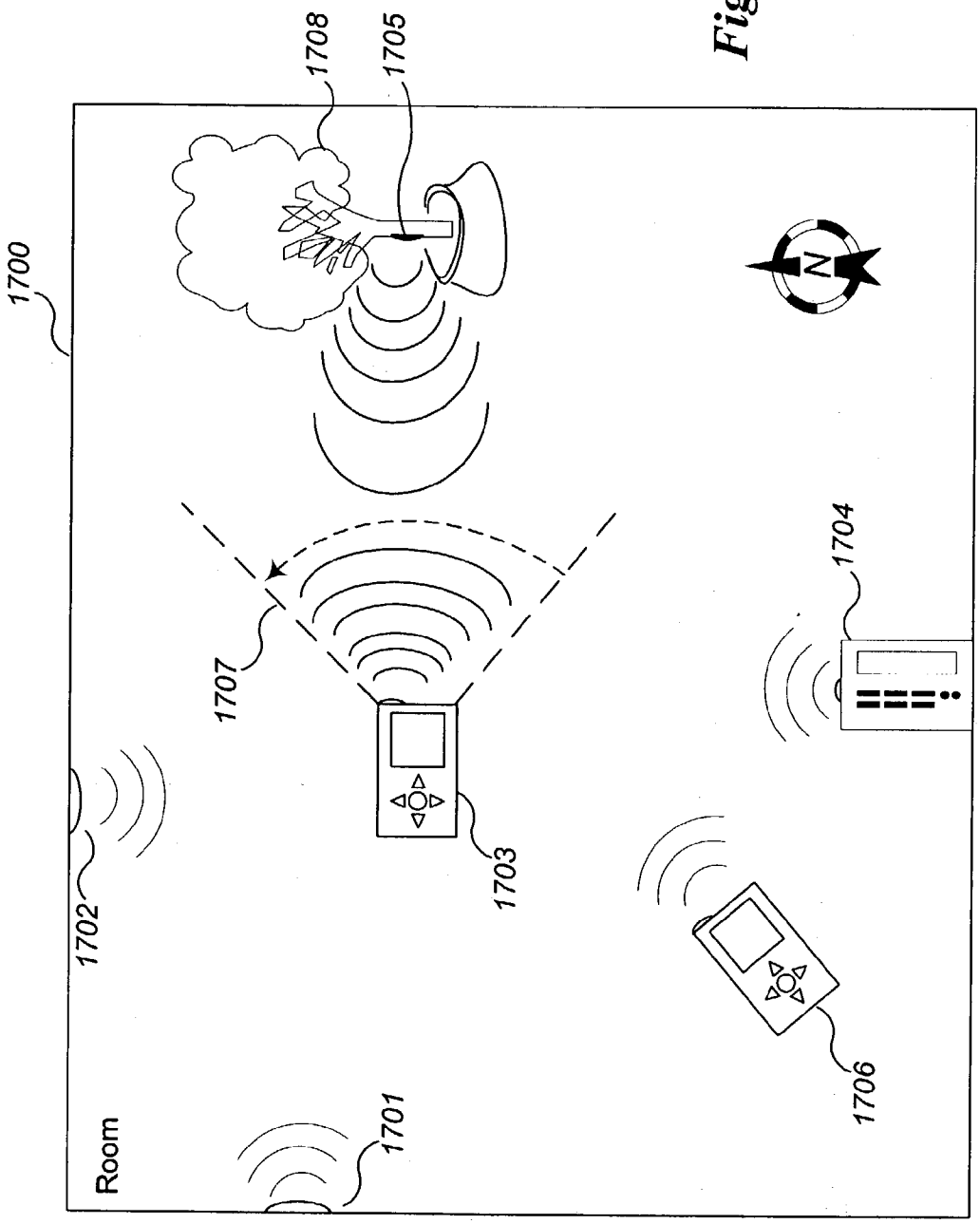

Fig. 17

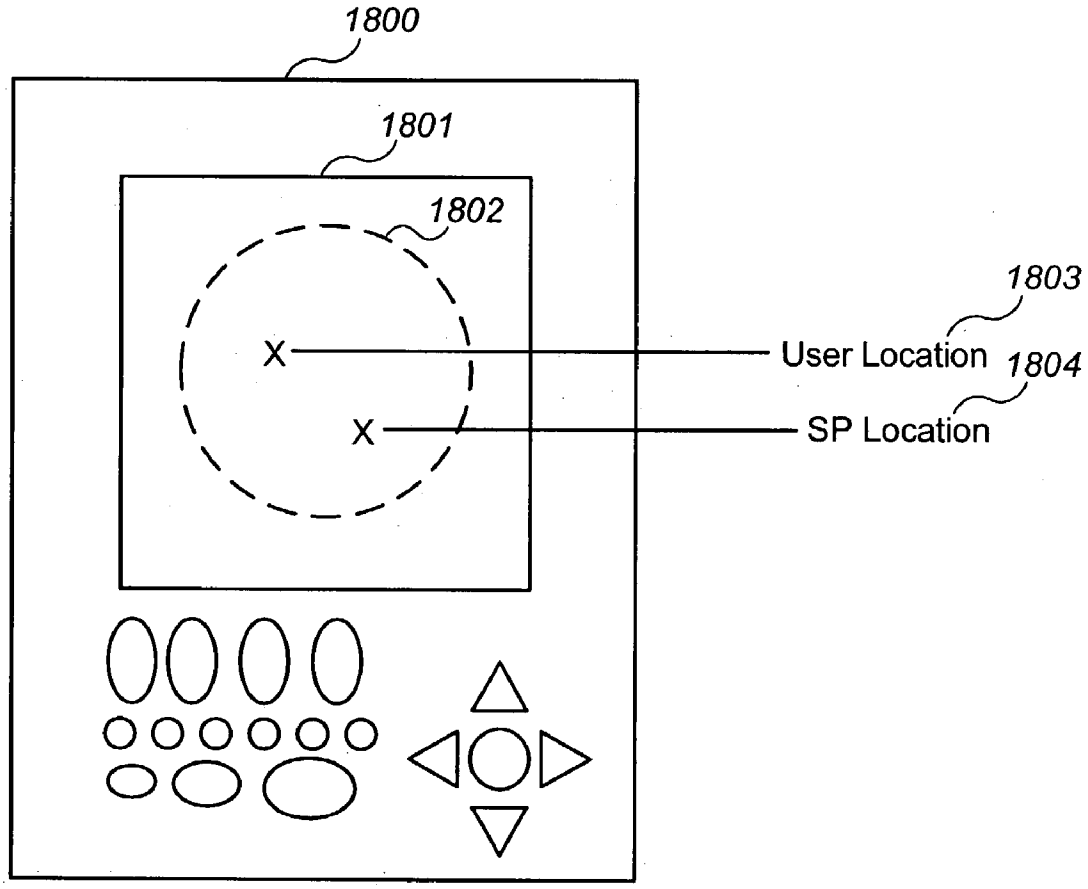

Fig. 18

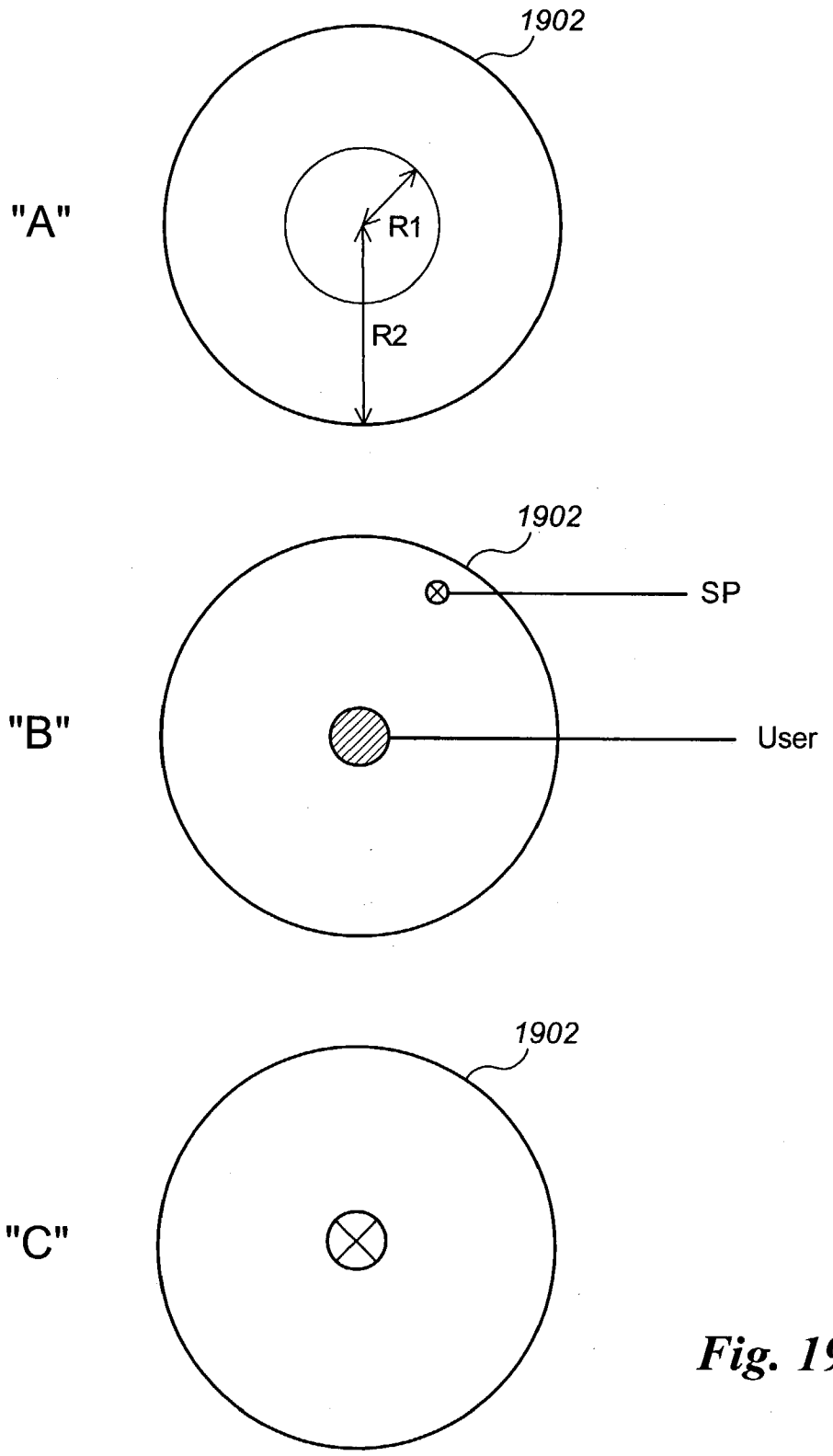

Fig. 19

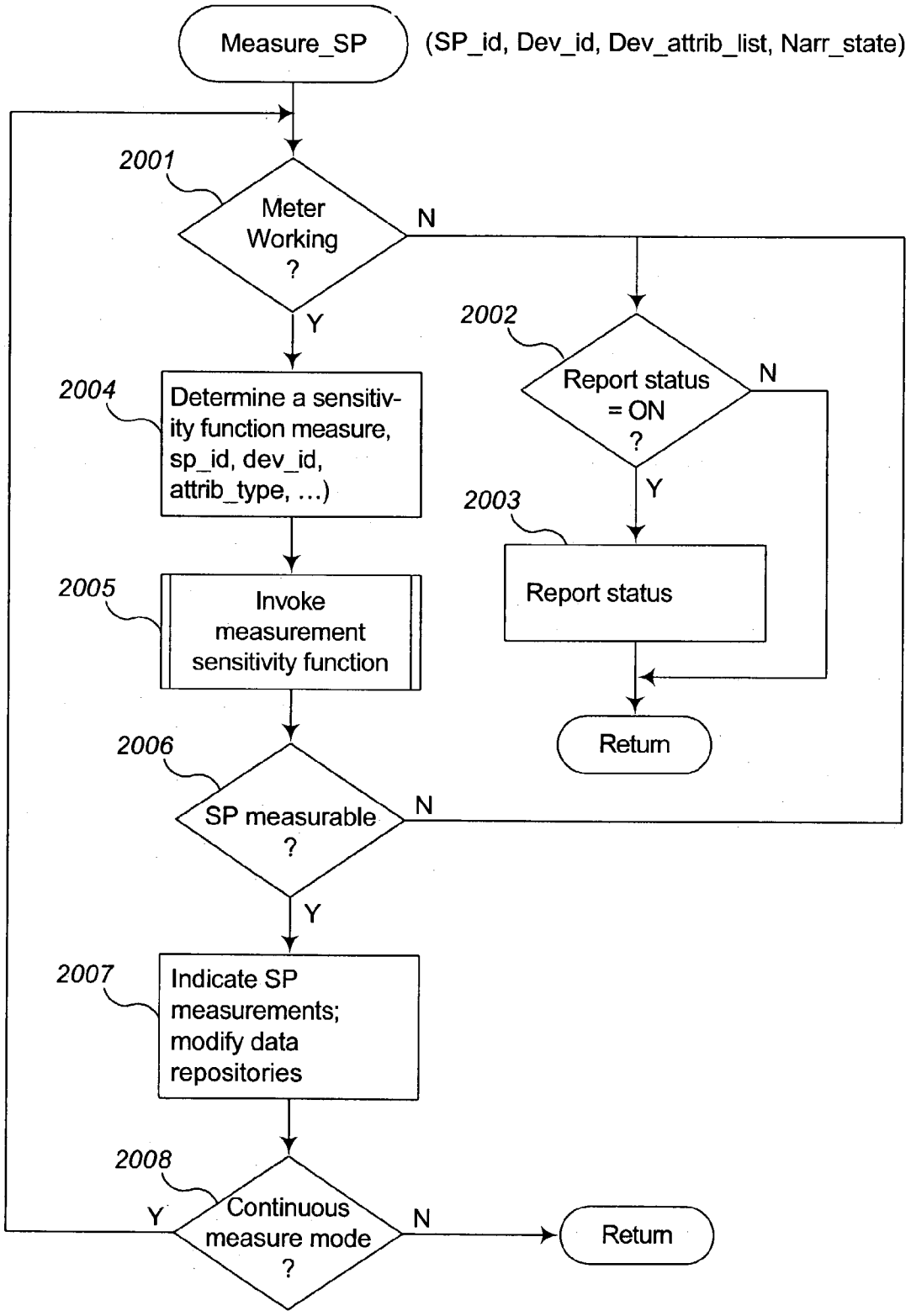
Measure_SP
(SP_id, Dev_id, Dev_attrib_list, Narr_state)
2001
Meter Working ?
N
Y
2002
Report status = ON ?
N
Y
2004
Determine a sensitivity function measure, sp_id, dev_id, attrib_type, ...)
2003
Report status
2005
Invoke measurement sensitivity function
Return
2006
SP measurable ?
N
Y
2007
Indicate SP measurements; modify data repositories
2008
Continuous measure mode ?
Y
N
Return

Fig. 20

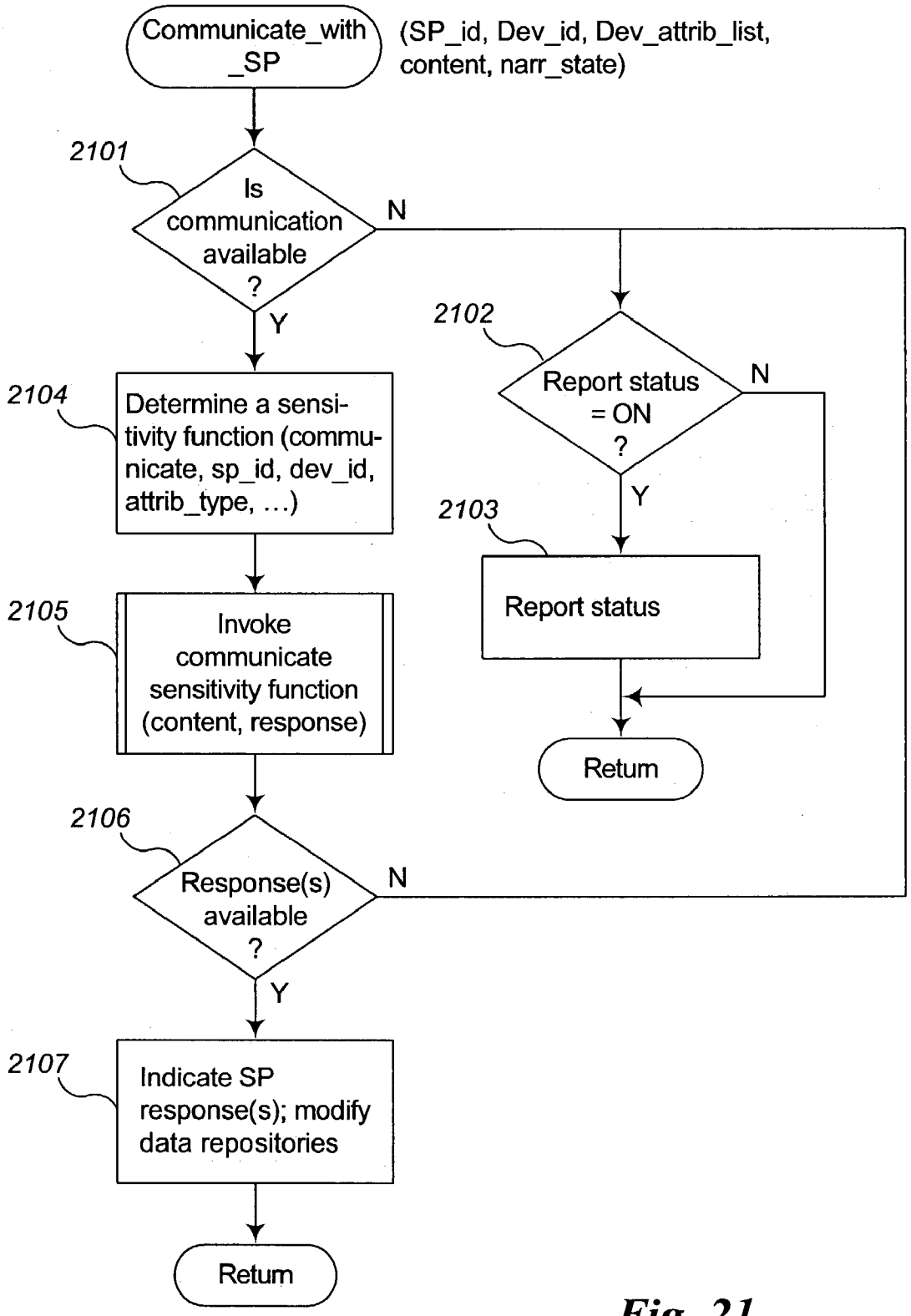
Communicate_with _SP
(SP_id, Dev_id, Dev_attrib_list, content, narr_state)
2101
Is communication available ?
N
Y
2102
Report status = ON ?
N
Y
2104
Determine a sensitivity function (communicate, sp_id, dev_id, attrib_type, ...)
2103
Report status
2105
Invoke communicate sensitivity function (content, response)
Return
2106
Response(s) available ?
N
Y
2107
Indicate SP response(s); modify data repositories
Return

Fig. 21

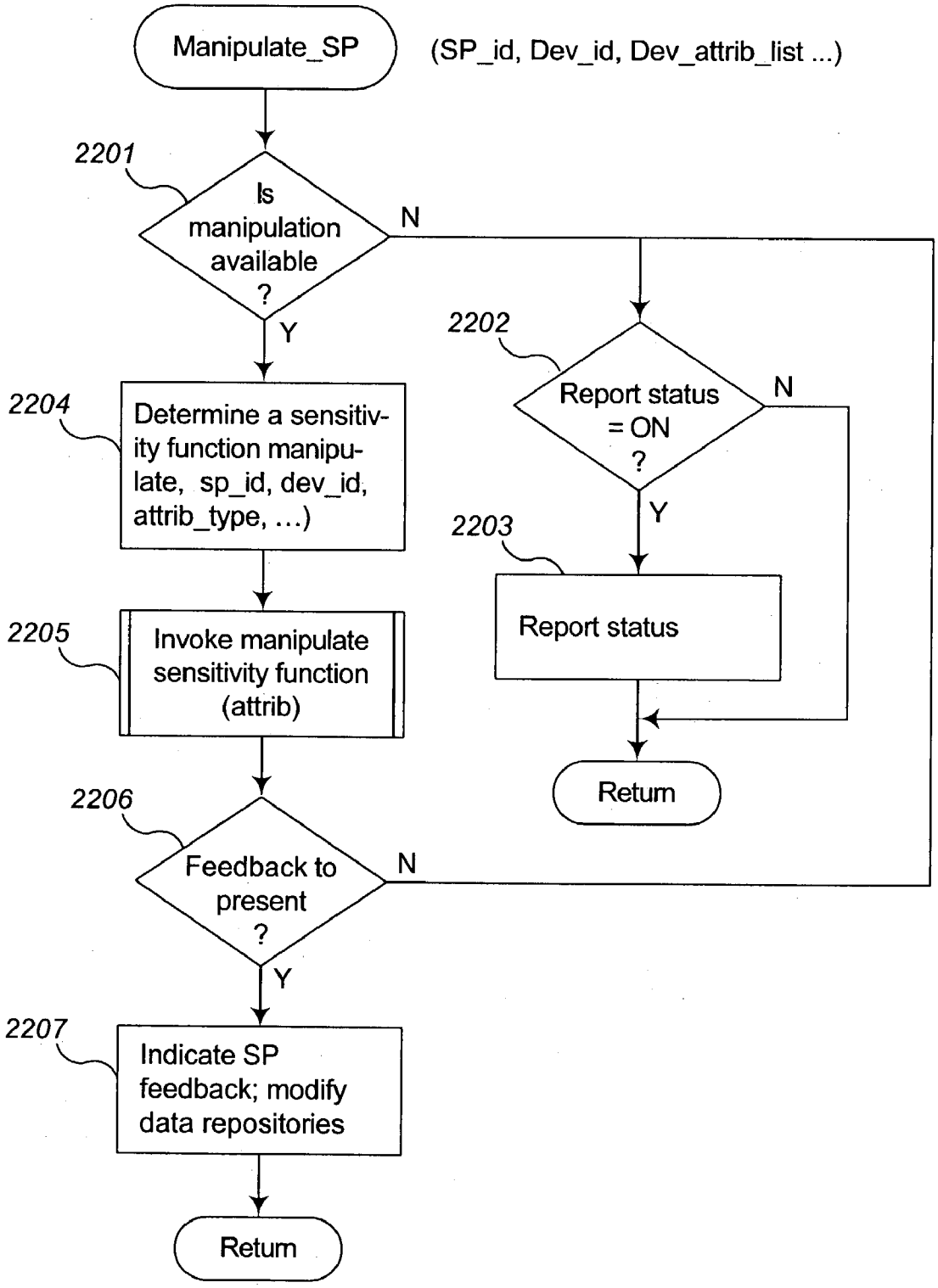
Manipulate_SP
(SP_id, Dev_id, Dev_attrib_list ...)
2201
Is manipulation available ?
N
Y
2202
Report status = ON ?
N
Y
2203
Report status
Return
2204
Determine a sensitivity function manipulate, sp_id, dev_id, attrib_type, ...)
2205
Invoke manipulate sensitivity function (attrib)
2206
Feedback to present ?
N
Y
2207
Indicate SP feedback; modify data repositories
Return

Fig. 22

METHOD AND SYSTEM FOR INTERACTING WITH SIMULATED PHENOMENA

BACKGROUND OF THE INVENTION

[0001] 1. Field of the Invention

[0002] The present invention relates to methods and systems for incorporating computer-controlled representations into a real world environment and, in particular, to methods and systems for using a mobile device to interact with simulated phenomena.

[0003] 2. Background Information

[0004] Computerized devices, such as portable computers, wireless phones, personal digital assistants (PDAs), global positioning system devices (GPSes) etc., are becoming compact enough to be easily carried and used while a user is mobile. They are also becoming increasingly connected to communication networks over wireless connections and other portable communications media, allowing voice and data to be shared with other devices and other users while being transported between locations. Interestingly enough, although such devices are also able to determine a variety of aspects of the user's surroundings, including the absolute location of the user, and the relative position of other devices, these capabilities have not yet been well integrated into applications for these devices.

[0005] For example, applications such as games have been developed to be executed on such mobile devices. They are typically downloaded to the mobile device and executed solely from within that device. Alternatively, there are multi-player network based games, which allow a user to "log-in" to a remotely-controlled game from a portable or mobile device; however, typically, once the user has logged-on, the narrative of such games is independent from any environment-sensing capabilities of the mobile device. At most, a user's presence through addition of an avatar that represents the user may be indicated in an on-line game to other mobile device operators. Puzzle type gaming applications have also been developed for use with some portable devices. These games detect a current location of a mobile device and deliver "clues" to help the user find a next physical item (like a scavenger hunt).

[0006] GPS mobile devices have also been used with navigation system applications such as for nautical navigation. Typical of these applications is the idea that a user indicates to the navigation system a target location for which the user wishes to receive an alert. When the navigation system detects (by the GPS coordinates) that the location has been reached, the system alerts the user that the target location has been reached.

[0007] Computerized simulation applications have also been developed to simulate a nuclear, biological, or chemical weapon using a GPS. These applications mathematically represent, in a quantifiable manner, the behavior of dispersion of the weapon's damaging forces (for example, the detection area is approximated from the way the wind carries the material emanating from the weapon). A mobile device is then used to simulate detection of this damaging force when the device is transported to a location within the dispersion area.

[0008] None of these applications take advantage of or integrate a device's ability to determine a variety of aspects of the user's surroundings.

BRIEF SUMMARY OF THE INVENTION

[0009] Embodiments of the present invention provide enhanced computer- and network-based methods and systems for interacting with simulated phenomena using mobile devices. Example embodiments provide a Simulated Phenomena Interaction System ("SPIS"), which enables users to enhance their real world activity with computer-generated and computer-controlled simulated entities, circumstances, or events, whose behavior is at least partially based upon the real world activity taking place. The Simulated Phenomena Interaction System is a computer-based environment that can be used to offer an enhanced gaming, training, or other simulation experience to users by allowing a user's actions to influence the behavior of the simulated phenomenon including the simulated phenomenon's simulated responses to interactions with the simulated phenomenon. In addition, the user's actions may influence or modify a simulation's narrative, which is used by the SPIS to assist in controlling interactions with the simulated phenomenon, thus providing an enriched, individualized, and dynamic experience to each user.

[0010] In one example embodiment, the Simulated Phenomena Interaction System comprises one or more functional components/modules that work together to support a single or multi-player computer gaming environment that uses one or more mobile devices to "play" with one or more simulated phenomena according to a narrative. The narrative is potentially dynamic and influenced by players' actions, external persons, as well as the phenomena being simulated. In another example embodiment, the Simulated Phenomena Interaction System comprises one or more functional components/modules that work together to provide a hands-on training environment that simulates real world situations, for example dangerous or hazardous situations such as contaminant detection and containment, in a manner that safely allows operators trial experiences that more accurately reflect real world behaviors.

[0011] For example, a Simulated Phenomena Interaction System may comprise a mobile device or other mobile computing environment and a simulation engine. The mobile device is typically used by an operator to indicate interaction requests with a simulated phenomenon. The simulation engine responds to such indicated requests by determining whether the indicated interaction request is permissible and performing the interaction request if deemed permissible. For example, the simulation engine may further comprise a narrative with data and event logic, a simulated phenomena characterizations data repository, and a narrative engine (e.g., to implement a state machine). The narrative engine typically uses the narrative and simulated phenomena characterizations data repository to determine whether an indicated interaction is permissible, and, if so, to perform that interaction with a simulated phenomenon. In addition, the simulation engine may comprise other data repositories or store other data that characterizes the state of the mobile device, information about the operator/player, the state of the narrative, etc. Separate modeling components may also be present to perform complex modeling of simulated phenomena, the environment, the mobile device, the user, etc.

[0012] According to one approach, interaction between a user and a simulated phenomena (SP) occurs when the

device sends an interaction request to a simulation engine and the simulation engine processes the requested interaction with the SP by changing a characteristic of some entity within the simulation (such as an SP, the narrative, an internal model of the device or the environment, etc.) and/or by responding to the device in a manner that evidences "behavior" of the SP. In some embodiments, interaction operations include detection of, measurement of, communication with, and manipulation of a simulated phenomenon. In one embodiment, the processing of the interaction request is a function of an attribute of the SP, an attribute of the mobile device that is based upon a real world physical characteristic of the device or the environment, and the narrative. For example, the physical characteristic of the device may be its physical location. In some embodiments the real world characteristic is determined by a sensing device or sensing function. The sensing device/function may be located within the mobile device or external to the device in a transient, dynamic, or static location.

[0013] According to another approach, the SPIS is used by multiple mobile environments to provide competitive or cooperative behavior relative to a narrative of the simulation engine.

BRIEF DESCRIPTION OF THE DRAWINGS

[0014] **FIG. 1** is a block diagram of a Simulated Phenomena Interaction System used to enhance the real world environment.

[0015] **FIG. 2** is a block diagram of an overview of example Simulated Phenomena Interaction System in operation.

[0016] **FIG. 3** is an example mobile device display of the results of an interaction request to a simulation engine used in a game, which involves both detection and measurement of simulated phenomena.

[0017] **FIG. 4** is an example mobile device display of the results of an interaction request to a simulation engine used in a game, which involves communication with a simulated phenomenon.

[0018] **FIG. 5** is an example mobile device display of the results of an interaction request to a simulation engine used in a game, which involves manipulation of a simulated phenomenon.

[0019] **FIG. 6** is an example block diagram of components of an example Simulated Phenomena Interaction System.

[0020] **FIG. 7** is an example block diagram of an alternative embodiment of components of an example simulation engine.

[0021] **FIG. 8** is an overview flow diagram of example steps to process interaction requests within a simulation engine of a Simulated Phenomena Interaction System.

[0022] **FIG. 9** is an overview flow diagram of example steps to process interactions within a mobile device used with a Simulated Phenomena Interaction System.

[0023] **FIG. 10** is an example block diagram of a general purpose computer system for practicing embodiments of a simulation engine of a Simulated Phenomena Interaction System.

[0024] **FIG. 11** illustrates an embodiment of a "thin" client mobile device, which interacts with a remote simulation engine running for example on a general purpose computer system, as shown in **FIG. 10**.

[0025] **FIG. 12** illustrates an embodiment of a "fat" client mobile device in which one or more portions of the simulation engine reside as part of the mobile device environment itself.

[0026] **FIG. 13** is an example block diagram of an event loop for an example simulation engine of a Simulated Phenomena Interaction System.

[0027] **FIG. 14** is an example flow diagram of an example detection interaction routine provided by a simulation engine of a Simulated Phenomena Interaction System.

[0028] **FIG. 15** is an example diagram illustrating simulation engine modeling of a mobile device that is able to sense its location by detecting electromagnetic broadcasts.

[0029] **FIG. 16** is an example illustration of an example field of vision on a display of a wearable device.

[0030] **FIG. 17** is an example diagram illustrating simulation engine modeling of a mobile device enhanced with infrared capabilities whose location is sensed by infrared transceivers.

[0031] **FIG. 18** is an example illustration of a display on a mobile device that indicates the location of a simulated phenomenon relative to a user's location as a function of the physical location of the mobile device.

[0032] **FIG. 19** contains a set of diagrams illustrating different ways to determine and indicate the location of a simulated phenomenon relative to a user when a device has a different physical range from its apparent range as determined by the simulation engine.

[0033] **FIG. 20** is an example flow diagram of an example measurement interaction routine provided by a simulation engine of a Simulated Phenomena Interaction System.

[0034] **FIG. 21** is an example flow diagram of an example communicate interaction routine provided by a simulation engine of a Simulated Phenomena Interaction System.

[0035] **FIG. 22** is an example flow diagram of an example manipulation interaction routine provided by a simulation engine of a Simulated Phenomena Interaction System.

DETAILED DESCRIPTION OF THE INVENTION

[0036] Embodiments of the present invention provide enhanced computer- and network-based methods and systems for interacting with simulated phenomena using mobile devices. Example embodiments provide a Simulated Phenomena Interaction System ("SPIS"), which enables users to enhance their real world activity with computer-generated and computer-controlled simulated entities, circumstances, or events, whose behavior is at least partially based upon the real world activity taking place. The Simulated Phenomena Interaction System is a computer-based environment that can be used to offer an enhanced gaming, training, or other simulation experience to users by allowing a user's actions to influence the behavior of the simulated phenomenon including the simulated phenomenon's simulated responses

to interactions with the simulated phenomenon. In addition, the user's actions may influence or modify a simulation's narrative, which is used by the SPIS to assist in controlling interactions with the simulated phenomenon, thus providing an enriched, individualized, and dynamic experience to each user.

[**0037**] For the purposes of describing a Simulated Phenomena Interaction System, a simulated phenomenon includes any computer software controlled entity, circumstance, occurrence, or event that is associated with the user's current physical world, such as persons, objects, places, and events. For example, a simulated phenomenon may be a ghost, playmate, animal, particular person, house, thief, maze, terrorist, bomb, missile, fire, hurricane, tornado, contaminant, or other similar real or imaginary phenomenon, depending upon the context in which the SPIS is deployed. Also, a narrative is sequence of events (a story—typically with a plot), which unfold over time. For the purposes herein, a narrative is represented by data (the current state and behavior of the characters and the story) and logic which dictates the next event to occur based upon specified conditions.

[**0038**] **FIG. 1** is a block diagram of a Simulated Phenomena Interaction System used to enhance the real world environment. In **FIG. 1**, operators **101**, **102**, and **103** interact with the Simulated Phenomena Interaction System ("SPIS") **100** to interact with simulated phenomenon of many forms. For example, **FIG. 1** shows operators **101**, **102**, and **103** interacting with three different types of simulated phenomena: a simulated physical entity, such as a metering device **110** that measures the range of how close a simulated phenomena is to a particular user; an imaginary simulated phenomenon, such as a ghost **111**; and a simulation of a real world event, such as a lightning storm **112**. Note that, for the purposes of this description, the word "operator" is used synonymously with user, player, etc. Also, one skilled in the art will recognize that a system such as the SPIS can simulate basically any real or imaginary phenomenon providing that the phenomenon's state and behavior can be specified and managed by the system.

[**0039**] In one example embodiment, the Simulated Phenomena Interaction System comprises one or more functional components/modules that work together to support a single or multi-player computer gaming environment that uses one or more mobile devices to "play" with one or more simulated phenomena according to a narrative. The narrative is potentially dynamic and influenced by players' actions, external personnel, as well as the phenomena being simulated. One skilled in the art will recognize that these components may be implemented in software or hardware or a combination of both. In another example embodiment, the Simulated Phenomena Interaction System comprises one or more functional components/modules that work together to provide a hands-on training environment that simulates real world situations, for example dangerous or hazardous situations, such as contaminant and air-born pathogen detection and containment, in a manner that safely allows operators trial experiences that more accurately reflect real world behaviors.

[**0040**] For use in all such simulation environments, a Simulated Phenomena Interaction System comprises a mobile device or other mobile computing environment and a simulation engine. The mobile device is typically used by an operator to indicate interaction requests with a simulated phenomenon. The simulation engine responds to such indicated requests by determining whether the indicated interaction request is permissible and performing the interaction request if deemed permissible. The simulation engine comprises additional components, such as a narrative engine and various data repositories, which are further described below and which provide sufficient data and logic to implement the simulation experience. That is, the components of the simulation engine implement the characteristics and behavior of the simulated phenomena as influenced by a simulation narrative.

[**0041**] **FIG. 2** is a block diagram of an overview of example Simulated Phenomena Interaction System in operation. In **FIG. 2**, the Simulated Phenomena Interaction System (SPIS) includes a mobile device **201** shown interacting with a simulation engine **202**. Mobile device **201** forwards (sends or otherwise indicates, depending upon the software and hardware configuration) an interaction request **205** to the simulation engine **202** to interact with one or more simulated phenomena **203**. The interaction request **205** specifies one or more of the operations of detection, measurement, communication, and manipulation. These four operations are the basic interactions supported by the Simulated Phenomena Interaction System. One skilled in the art will recognize that other interactions may be defined separately or as subcomponents, supersets, or aggregations of these operations, and the choice of operations is not intended to be exclusive. In one embodiment of the system, at least one of the interaction requests **205** to the simulation engine **202** indicates a value that has been sensed by some device or function **204** in the user's real world. Sensing function/device **204** may be part of the mobile device **201**, or in proximity of the mobile device **201**, or completely remote to the location of both the mobile device **201** and/or the simulation engine **202**. Once the interaction request **205** is received by simulation engine **202**, the simulation engine determines an interaction response **206** to return to the mobile device **201**, based upon the simulated phenomena **203**, the previously sensed value, and a narrative **207** associated with the simulation engine **202**. The characterizations (attribute values) of the simulated phenomena **203**, in cooperation with events and data defined by the narrative **207**, determine the appropriate interaction response **206**. Additionally, the simulation engine **202** may take other factors into account in generating the interaction response **206**, such as the state of the mobile device **201**, the particular user initiating the interaction request **205**, and other factors in the simulated or real world environment. At some point during the processing of the interaction request **205**, the simulation provided by simulation engine **202** is affected by the sensed value and influences the interaction response **206**. For example, the characterizations of the simulated phenomena **203** themselves may be modified as a result of the sensed value; an appropriate interaction response selected based upon the sensed value; or the narrative logic itself modified as a result. Other affects and combinations of affects are possible.

[**0042**] **FIGS. 3**, **4**, and **5** are example mobile device displays associated with interaction requests and responses in a gaming environment. These figures correspond to an example embodiment of a gaming system, called "Spook," that incorporates techniques of the methods and systems of

the Simulated Phenomena Interaction System to enhance the gaming experience. A more comprehensive description of examples from the Spook game is included as Appendix A, which is herein incorporated by reference in its entirety. In summary, Spook defines a narrative in which ghosts are scattered about a real world environment in which the user is traveling with the mobile device, for example, a park. The game player, holding the mobile device while traveling, interacts with the game by initiating interaction requests and receiving feedback from the simulation engine that runs the game. In one example, the player's goal is to find a particular ghost so that the ghost can be helped. In that process, the player must find all the other ghosts can capture them in order to enhance the detection capabilities of the detection device so that it can detect the particular ghost. As the player travels around the park, the ghosts are detected (and can be captured) depending upon the actual physical location of the player in the park. The player can also team up with other players (using mobile devices) to play the game.

[0043] **FIG. 3** is an example mobile device display of the results of an interaction request to a simulation engine used in a game, which involves both detection and measurement of simulated phenomena. Mobile device **300** includes a detection and measurement display area **304** and a feedback and input area **302**. In **FIG. 3**, mobile device **300** shows the results of interacting with a series of ghosts (the simulated phenomena) as shown in detection and measurement display area **304**. The interaction request being processed corresponds to both detection and measurement operations (e.g., "show me where all the ghosts are"). In response to this request, the simulation engine sends back information regarding the detected simulated phenomena ("SPs") and where they are relative to the physical location of the mobile device **300**. Accordingly, the display area **304** shows a "spectra-meter"**301** (a spectral detector), which indicates the locations of each simulated phenomena ("SP") that was detectable and detected by the device **300**. In this example, the line of the spectra-meter **301** indicates a direction of travel of the user of the mobile device **300** and the SPs' locations are relative to device location. An observation "key" to the detected SPs is shown in key area **303**. The display area **304** also indicates that the current range of the spectra-meter **301** is set to exhibit a **300** foot range of detection power. (One skilled in the art will recognize that this range may be set by the simulation engine to be different or relative to the actual physical detection range of the device—depending upon the narrative logic and use of SPIS.) Using the current range, the spectra-meter **301** has detected four different ghosts, displayed in iconic form by the spectra-meter **301**. As a result of the detection and measurement request, the simulation engine has also returned feedback (in the form of a hint) to the user which is displayed in feedback and input area **302**. This hint indicates a current preference of one of the ghosts called "Lucky Ghost." The user can then use this information to learn more about Lucky Ghost in a future interaction request (see **FIG. 4**). Once skilled in the art will recognize that the behaviors and indications shown by mobile device **300** are merely examples, and that any behavior and manner of indicating location of an SP is possible as long as it can be implemented by the SPIS. For example, the pitch of an audio tone, other visual images, or tactile feedback (e.g., device vibration), may be used the presence of and proximity of a ghost. In addition, other attributes that characterize the type of phenomenon being detected, such as whether the SP is friendly or not, may also be shown.

[0044] **FIG. 4** is an example mobile device display of the results of an interaction request to a simulation engine used in a game, which involves communication with a simulated phenomenon. Mobile device **400** includes a question area **401**, an answer area **402**, and a special area **403**, which is used to indicate a reliability measurement of the information just received from the ghosts. Mobile device **400** also includes an indication of the current SP being communicated with in the header area **404** (here the "Lucky Ghost"). In the specific example shown, the operator selects between the three questions displayed in question area **401**, using whatever navigational input is available on the mobile device **400** (such as arrow keys in combination with the buttons in input area **405**). One skilled in the art will recognize that, using other types of mobile devices, alternate means for input and thus alternative indication of communications is possible and desirable. For example, using a device with a keyboard, the user might type in (non preformed) questions that utilize a system of keyword matching. A response, which is not shown, would be displayed by mobile device **400** in the answer area **402** when it is received from the simulation engine. Also, the truth detector shown in special area **403** would register a value (not shown) indicating the reliability of the SP response.

[0045] **FIG. 5** is an example mobile device display of the results of an interaction request to a simulation engine used in a game, which involves manipulation of a simulated phenomenon. Mobile device **500** includes a feedback and input area **503**. In **FIG. 5**, mobile device **500** illustrates the result of performing a "vacuuming operation" on a previously located ghost. Vacuuming is a manipulation operation provide by the Spook game to allow a user a means of capturing a ghost. The spectra-meter **502** shows the presence of a ghost (SP) currently to the left of the direction the user is traveling. Depending upon the rules of the narrative logic of the game, the ghost may be close enough to capture. When the user initiates a vacuuming operation with the simulation engine, then the vacuuming status bar area **501** is changed to show the progress of vacuuming up the ghost. If the ghost is not within manipulation range, this feedback (not shown) is displayed in the feedback and input area **503**.

[0046] In a hands-on training environment that simulates real world situations, such as a contaminant detection simulation system, the interaction requests and interaction responses and processed by the mobile device are appropriately modified to reflect the needs of the simulation. For example, techniques of the Simulated Phenomena Interaction System may be used to provide training scenarios which address critical needs related to national security, world health, and the challenges of modern peacekeeping efforts. In one example embodiment, the SPIS is used to create a Biohazard Detection Training Simulator (BDTS) that can be used to train emergency medical and security personnel in the use of portable biohazard detection and identification units in a safe, convenient, affordable, and realistic environment. A further description of this example use and an example training scenario is included in Appendix B, which is herein incorporated by reference in its entirety.

[0047] This embodiment simulates the use of contagion detector devices that have been developed using new tech-

nologies to detect pathogens and contagions in a physical area. Example devices include BIOHAZ, FACSCount, LUMINEX 100, ANALYTE 2000, BioDetector (BD), ORIGEN Analyzer, and others, as described by the Bio-Detector Assessment Report prepared by the U.S. Army Edgewood Chemical, Biological Center (ERT Technical Bulletin 2001-4), which is herein included by reference in its entirety. Since it is prohibitively expensive to install such devices in advance everywhere they may be needed in the future, removing them from commission for training emergency personnel is not practical. Thus, BDTSs can be substituted for training purposes. These BDTSs need to simulate the pathogen and contagion detection technology as well as the calibration of a real contagion detector device and any substances needed to calibrate or operate the device. In addition, the narrative needs to be constructed to simulate field conditions and provide guidance to increase the awareness of proper personnel protocol when hazardous conditions exist.

[**0048**] In addition to gaming and hazardous substance training simulators, one skilled in the art will recognize, that the techniques of the Simulated Phenomena Interaction System may be useful to create a variety of other simulation environments, including response training environments for other naturally occurring phenomenon, for example, earthquakes, floods, hurricanes, tornados, bombs, and the like. Also, these techniques may be used to enhance real world experiences with more "game-like" features. For example, a SPIS may be used to provide computerized (and narrative based) routing in an amusement park with rides or other facility so that a user's experience is optimized to frequent rides with the shortest waiting times. In this scenario, the SPIS acts as a "guide" by placing SPs in locations (relative to the user's physical location in the park) that are strategically located relative to the desired physical destination. The narrative, as evidenced by the SPs behavior and responses, encourages the user to go after the strategically placed SPs. The user is thus "led" by the SPIS to the desired physical destination and encouraged to engage in desired behavior (such as paying for the ride) by being "rewarded" by the SPIS according to the narrative (such as becoming eligible for some real world prize once the state of the mobile device is shown to a park operator). Many other gaming, training, and computer aided learning experiences can be similarly presented and supported using the techniques of a Simulated Phenomena Interaction System.

[**0049**] For use in all such simulation environments, a Simulated Phenomena Interaction System comprises a mobile device or other mobile computing environment and a simulation engine. **FIG. 6** is an example block diagram of components of an example Simulated Phenomena Interaction System. In **FIG. 6, a** Simulated Phenomena Interaction System comprises one or more mobile devices or computing environments **601-604** and a simulation engine **610**. For example, **FIG. 6** shows four different types of mobile devices: a global positioning system (GPS) **601**, a portable computing environment **602**, a personal data assistant (PDA) **603**, and a mobile telephone (e.g., a cell phone) **604**. The mobile device is typically used by an operator as described above to indicate interaction requests with a simulated phenomenon. Simulation engine **610** responds to such indicated requests by determining whether the indicated interaction request is permissible and performing the interaction request if deemed so.

[**0050**] The simulation engine may further comprise a narrative with data and event logic, a simulated phenomena characterizations data repository, and a narrative engine (e.g., to implement a state machine for the simulation). The narrative engine uses the narrative and the simulated phenomena characterizations data repository to determine whether an indicated interaction is permissible, and, if so, to perform that interaction with a simulated phenomenon. In addition, the simulation engine may comprise other data repositories or store other data that characterizes the state of the mobile device, information about the operator, the state of the narrative, etc.

[**0051**] Accordingly, the simulation engine **610** may comprise a number of other components for processing interaction requests and for implementing the characterizations and behavior of simulated phenomena. For example, simulation engine **610** may comprise a narrative engine **612**, an input/output interface **611** for interacting with the mobile devices **601-604**, and one or more data repositories **620-624**. In what might be considered a more minimally configured simulation engine **610**, the narrative engine **612** interacts with a simulated phenomena attributes data repository **620** and a narrative data and logic data repository **621**. The simulated phenomena attributes data repository **620** typically stores information that is used to characterize and implement the "behavior" of simulated phenomena (responses to interaction requests). For example, attributes may include values for location, orientation, velocity, direction, acceleration, path, size, duration schedule, type, elasticity, mood, temperament, image, ancestry, or any other seemingly real world or imaginary characteristic of simulated phenomena. The narrative data and logic data repository **621** stores narrative information and event logic which is used to determine a next logical response to an interaction request. The narrative engine **612** uses the narrative data and logic data repository **621** and the simulated phenomena attributes data repository **620** to determine whether an indicated interaction is permissible, and, if so, to perform that interaction with the simulated phenomena. The narrative engine **612** then communicates a response or the result of the interaction to a mobile device, such as devices **601-604** through the I/O interface **611**. I/O interface **611** may contain, for example support tools and protocol for interacting with a wireless device over a wireless network.

[**0052**] In a less minimal configuration, the simulation engine **610** may also include one or more other data repositories **622-624** for use with different configurations of the narrative engine **612**. These repositories may include, for example, a user characteristics data repository **622**, which stores characterizations of each user who is interacting with the system; a environment characteristics data repository **624**, which stores values sensed by sensors within the real world environment; and a device attributes data repository **623**, which may be used to track the state of each mobile device being used to interact with the SPs.

[**0053**] One skilled in the art will recognize that many configurations are possible with respect to the narrative engine **612** and the various data repositories **620-624**. These configurations may vary with respect to how much logic and data is contained in the narrative engine **612** itself versus stored in each data repository and whether the event logic (e.g., in the form of a narrative state machine) is stored in data repositories, as for example stored procedures, or is

stored in other (not shown) code modules. In the embodiment exemplified in **FIG. 6**, it is assumed that the logic for representing and processing the simulated phenomena and the narratives are contained in the respective data repositories **620** and **621** themselves. In an alternate embodiment, there may be additional modules in the simulation engine that model the various subcomponents of the SPIS.

[**0054**] **FIG. 7** is an example block diagram of an alternative embodiment of components of an example simulation engine. In this embodiment, separate modules implement the logic needed to model each component of a simulation engine, such as the simulated phenomena, the environment, and the narrative. As in the embodiment described in **FIG. 6**, the simulation engine **701** comprises a narrative engine **702**, input/output interfaces **703**, and one or more data repositories **708-712**. Also, similarly, the narrative engine **702** receives and responds to interaction requests through the input/output interfaces **703**. I/O interfaces **703** may contain, for example, support tools and protocol for interacting with a wireless device over a wireless network. In addition, however, simulation engine **701** contains separate models for interacting with the various data repositories **708-712**. For example, simulation engine **701** comprises a phenomenon model **704**, a narrative logic model **706**, and an environment model **705**. The data repositories **708-712** are shown connected to a data repository "bus"**707** although this bus may be merely an abstraction. Bus **707** is meant to signify that any of the models **704-706** may be communicating with one or more of the data repositories **708-712** resident on the bus **707** at any time. In this embodiment, as in the embodiment shown in **FIG. 6**, some of the data repositories **708-712** are shown as optional (dotted lines), such as a user characteristics data repository **711** and a device attributes data repository **712**. However, because **FIG. 7** shows an example that uses an environment model **705**, **FIG. 7** shows a corresponding environment data repository **709**, which stores the state (real or otherwise) of various attributes being tracked in the environment.

[**0055**] Models **704-706** are used to implement the logic (that affects event flow and attribute values) that governs the various entities being manipulated by the system, instead of placing all of the logic into the narrative engine **702**, for example. Distributing the logic into separate models allows for more complex modeling of the various entities manipulated by the simulation engine **701**, such as, for example, the simulated phenomena, the narrative, and representations of the environment, users, and devices. For example, a module or subcomponent that models the simulated phenomena, the phenomenon model **704**, is shown separately connected to the plurality of data repositories **708-712**. This allows separate modeling of the same type of SP, depending, for example, on the mobile device, the user, the experience of the user, sensed real world environment values for a specific device, etc. Having a separate phenomenon model **704** also allows easy testing of the environment to implement, for example, new scenarios by simply replacing the relevant modeling components. It also allows complex modeling behaviors to be implemented more easily, such as SP attributes whose values require a significant amount of computing resources to calculate; new behaviors to be dynamically added to the system (perhaps, even, on a random basis); multi-user interaction behavior (similar to a transaction processing system that coordinates between multiple users interacting with the same SP); algorithms, such as artificial intelligence based algorithms, which are better executed on a distributed server machine; or other complex requirements.

[**0056**] Also, for example, the environment model **705** is shown separately connected to the plurality of data repositories **708-712**. Environment model **705** may comprise state and logic that dictates how attribute values that are sensed from the environment influence the simulation engine responses. For example, the type of device requesting the interaction, the user associated with the current interaction request, or some such state may potentially influences how a sensed environment value affects an interaction response or an attribute value of an SP.

[**0057**] Similarly, the narrative logic model **706** is shown separately connected to the plurality of data repositories **708-712**. The narrative logic model **706** may comprise narrative logic that determines the next event in the narrative but may vary the response from user to user, device to device, etc., as well as based upon the particular simulated phenomenon being interacted with.

[**0058**] Regardless of the internal configurations of the simulation engine, the components of the Simulated Phenomena Interaction System process interaction requests in a similar overall functional manner.

[**0059**] **FIGS. 8 and 9** provide overviews of the interaction processing of a simulation engine and a mobile device in a Simulated Phenomena Interaction System. **FIG. 8** is an overview flow diagram of example steps to process interaction requests within a simulation engine of a Simulated Phenomena Interaction System. In step **801**, the simulation engine receives an interaction request from a mobile device. In step **802**, the simulation engine characterizes the device from which the request was received, and, in step **803**, characterizes the simulated phenomenon that is the target/destination of the interaction request. Using such characterizations, the simulation engine is able to determine whether or not, for example, a particular simulated phenomenon may be interacted with by the particular device. In step **804**, the simulation engine determines, based upon the device characterization, the simulated phenomenon characterization, and the narrative logic the next event in the narrative sequence; that is, the next interaction response or update to the "state" or attributes of some entity in the SPIS. In step **805**, if the simulation engine determines that the event is allowed (based upon the characterizations determined in steps **802-804**), then the engine continues in step **806** to perform that event (interaction response), or else continues back to the beginning of the loop in step **801** to wait for the next interaction request.

[**0060**] **FIG. 9** is an overview flow diagram of example steps to process interactions within a mobile device used with a Simulated Phenomena Interaction System. In step **901**, optionally within some period of time, and perhaps not with each request or not at all, the device senses values based upon the real world environment in which the mobile device is operating. As described earlier, this sensing of the real world may occur by a remote sensor that is completely distinct from the mobile device, attached to the mobile device, or may occur as an integral part of the mobile device. For example, a remote sensor may be present in an object in the real world that has no physical connection to the mobile device at all. In step **902**, the device receives operator input,

and in step **903** determines the type of interaction desired by the operator. In step **904**, the device sends a corresponding interaction request to the simulation engine and then awaits a response from the simulation engine. One skilled in the art, will recognize that depending upon the architecture used to implement the SPIS, the sending of an interaction request may be within the same device or may be to a remote system. In step **905**, a simulation engine response is received, and in step **906**, any feedback indicated by the received response is indicated to the operator. The mobile device processing then returns to the beginning of the loop in step **901**.

[**0061**] Although the techniques of Simulated Phenomena Interaction System are generally applicable to any type of entity, circumstance, or event that can be modeled to incorporate a real world attribute value, the phrase "simulated phenomenon," is used generally to imply any type of imaginary or real-world place, person, entity, circumstance, event, occurrence. In addition, one skilled in the art will recognize that the phrase "real-world" means in the physical environment or something observable as existing, whether directly or indirectly. Also, although the examples described herein often refer to an operator or user, one skilled in the art will recognize that the techniques of the present invention can also be used by any entity capable of interacting with a mobile environment, including a computer system or other automated or robotic device. In addition, the concepts and techniques described are applicable to other mobile devices and other means of communication other than wireless communications, including other types of phones, personal digital assistances, portable computers, infrared devices, etc, whether they exist today or have yet to be developed. Essentially, the concepts and techniques described are applicable to any mobile environment. Also, although certain terms are used primarily herein, one skilled in the art will recognize that other terms could be used interchangeably to yield equivalent embodiments and examples. In addition, terms may have alternate spellings which may or may not be explicitly mentioned, and one skilled in the art will recognize that all such variations of terms are intended to be included.

[**0062**] Example embodiments described herein provide applications, tools, data structures and other support to implement a Simulated Phenomena Interaction System to be used for games, interactive guides, and hands-on training environments. One skilled in the art will recognize that other embodiments of the methods and systems of the present invention may be used for other purposes, including, for example, traveling guides, emergency protocol evaluation, and for more fanciful purposes including, for example, a matchmaker (SP makes introductions between people in a public place), traveling companions (e.g., a bus "buddy"), a driving pace coach (SP recommends what speed to attempt to maintain to optimize travel in current traffic flows, a wardrobe advisor (personal dog robot has SP "personality," which accesses current and predicted weather conditions and suggests attire), etc. In the following description, numerous specific details are set forth, such as data formats and code sequences, etc., in order to provide a thorough understanding of the techniques of the methods and systems of the present invention. One skilled in the art will recognize, however, that the present invention also can be practiced without some of the specific details described herein, or with other specific details, such as changes with respect to the ordering of the code flow.

[**0063**] A variety of hardware and software configurations may be used to implement a Simulated Phenomena Interaction System. A typical configuration, as illustrated with respect to **FIGS. 2 and 6**, involves a client-server architecture of some nature. One skilled in the art will recognize that many such configurations exist ranging from a very thin client (mobile) architecture that communicates with all other parts of the SPIS remotely to a fat client (mobile) architecture that incorporates all portions of the SPIS on the client device. Many configurations in between these extremes are also plausible and expected.

[**0064**] **FIG. 10** is an example block diagram of a general purpose computer system for practicing embodiments of a simulation engine of a Simulated Phenomena Interaction System. The general purpose computer system **1000** may comprise one or more server (and/or client) computing systems and may span distributed locations. In addition, each block shown may represent one or more such blocks as appropriate to a specific embodiment or may be combined with other blocks. Moreover, the various blocks of the simulation engine **1010** may physically reside on one or more machines, which use standard interprocess communication mechanisms, across wired or wireless networks to communicate with each other.

[**0065**] In the embodiment shown, computer system **1000** comprises a computer memory ("memory") **1001**, an optional display **1002**, a Central Processing Unit ("CPU") **1003**, and Input/Output devices **1004**. The simulation engine **1010** of the Simulated Phenomena Interaction System ("SPIS") is shown residing in the memory **1001**. The components of the simulation engine **1010** preferably execute on CPU **1003** and manage the generation and interaction with of simulated phenomena, as described in previous figures. Other downloaded code **1030** and potentially other data repositories **1030** also reside in the memory **1010**, and preferably execute on one or more CPU's **1003**. In a typical embodiment, the simulation engine **1010** includes a narrative engine **1011**, an I/O interface **1012**, and one or more data repositories, including simulated phenomena attributes data repository **1013**, narrative data and logic data repository **1014**, and other data repositories **1015**. In embodiments that include separate modeling components, these components would additionally reside in the memory **1001** and execute on the CPU **1003**.

[**0066**] In an example embodiment, components of the simulation engine **1010** are implemented using standard programming techniques. One skilled in the art will recognize that the components lend themselves object-oriented, distributed programming, since the values of the attributes and behavior of simulated phenomena can be individualized and parameterized to account for each device, each user, real world sensed values, etc. However, any of the simulation engine components **1011-1015** may be implemented using more monolithic programming techniques as well. In addition, programming interfaces to the data stored as part of the simulation engine **1010** can be available by standard means such as through C, C++, C#, and Java API and through scripting languages such as XML, or through web servers supporting such interfaces. The data repositories **1013-1015**

are preferably implemented for scalability reasons as databases rather than as a text file, however any storage method for storing such information may be used. In addition, behaviors of simulated phenomena may be implemented as stored procedures, or methods attached to SP "objects," although other techniques are equally effective.

[0067] One skilled in the art will recognize that the simulation engine **1010** and the SPIS may be implemented in a distributed environment that is comprised of multiple, even heterogeneous, computer systems and networks. For example, in one embodiment,-the narrative engine **1011**, the I/O interface **1012**, and each data repository **1013-1015** are all located in physically different computer systems, some of which may be on a client mobile device as described with reference to **FIGS. 11 and 12**. In another embodiment, various components of the simulation engine **1010** are hosted each on a separate server machine and may be remotely located from tables stored in the data repositories **1013-1015**.

[0068] **FIGS. 11 and 12** are examples block diagrams of client devices used for practicing embodiments of the simulated phenomena interaction system. **FIG. 11** illustrates an embodiment of a "thin" client mobile device, which interacts with a remote simulation engine running for example on a general purpose computer system, as shown in **FIG. 10**. **FIG. 12** illustrates an embodiment of a "fat" client mobile device in which one or more portions of the simulation engine reside as part of the mobile device environment itself.

[0069] Specifically, **FIG. 11** shows mobile device **1101** interacting over a mobile network **1130**, such as a wireless network **1130**, to interact with simulation engine **1120**. The mobile device **1101** may comprise a display **1102**, a CPU **1104**, a memory **1107**, one or more environment sensors **1103**, one or more network devices **1106** for communicating with the simulation engine **1120** over the network **1130**, and other input/output devices **1105**. Code such as client code **1108** that is needed to interact with the simulation engine **1120** preferably resides in the memory **1108** and executes on the CPU **1104**. One skilled in the art will recognize that a variety of mobile devices may be used with the SPIS included cell phones, PDAs, GPSes, portable computing devices, infrared devices, 3-D wireless (e.g., headmounted) glasses, virtual reality devices, other handheld devices and wearable devices, and basically any mobile or portable device capable of location sensing. In addition, network communication may be provided over cell phone modems, IEEE 802.11 b protocol, Bluetooth protocol or any other wireless communication protocol or equivalent.

[0070] Alternatively, the client device may be implemented as a fat client mobile device as shown in **FIG. 12**. In **FIG. 12**, mobile device **1201** is shown communicating via a communications network **1230** to other mobile device or portable computing environments. The communications network may be a wireless network or a wired network used to intermittently send data to other devices and environments. The mobile device **1201** may comprise a display **1202**, a CPU **1204**, a memory **1207**, one or more environment sensors **1203**, one or more network devices **1206** for communicating over the network **1230**, and other input/output devices **1205**. The components **1202-1206** correspond to their counterparts described with reference to the thin client mobile device illustrated in **FIG. 12**. As currently depicted, all components and data of the simulation engine **1220** are contained within the memory **1207** of the client device **1201** itself. However, one skilled in the art will recognize that one or more portions of simulation engine **1220** may be instead remotely located such that the mobile device **1201** communicates over the communications network **1230** using network devices **1206** to interact with those portions of the simulation engine **1220**. In addition to a simulation engine **1220** shown in the memory **1207** is other program code **1208**, which may be used by the mobile device to initiate an interaction request as well as for other purposes, some of which may be unrelated to the SPIS.

[0071] Different configurations and locations of programs and data are contemplated for use with the techniques of the present invention. In example embodiments, these components may execute concurrently and asynchronously; thus, the components may communicate using well-known message passing techniques. One skilled in the art will recognize that equivalent synchronous embodiments are also supported by an SPIS implementation, especially in the case of a fat client architecture. Also, other steps could be implemented for each routine, and in different orders, and in different routines, yet still achieve the functions of the SPIS.

[0072] As described in FIGS. **1-9**, some of the primary functions of a simulation engine of a Simulated Phenomena Interaction System are to implement (generate and manage) simulated phenomena and to handle interaction requests from mobile devices so as to incorporate simulated phenomena into the real world environments of users.

[0073] **FIG. 13** is an example block diagram of an event loop for an example simulation engine of a Simulated Phenomena Interaction System. As described earlier, typically the narrative engine portion of the simulation engine receives interaction requests from a mobile device through the I/O interfaces, determines how to process them, processes the requests if applicable, and returns any feedback indicated to the mobile device for playback or display to an operator. The narrative engine receives as input with each interaction request an indication of the request type and information that identifies the device or specify attribute values from the device. Specifically, in step **1301**, the narrative engine determines or obtains state information with respect to the current state of the narrative and the next expected possible states of the narrative. That is, the narrative engine determines what actions and/or conditions are necessary to advance to the next state and how that state is characterized. This can determined by any standard well-known means for implementing a state machine, such as a case statement in code, a table-driven method etc. In step **1302**, the narrative engine determines what type of interaction request was designated as input and in steps **1303-1310** processes the request accordingly. More specifically, in step **1303**, if the designated interaction request corresponds to a detection request, then the narrative engine proceeds in step **1307** to determine which detection interface to invoke and then invokes the determined interface. Otherwise, the narrative engine continues in step **1304** to determine whether the designated interaction request corresponds to a communications interaction request. If so, the narrative engine continues in step **1308**, to determine which communication interface to invoke and subsequently invokes the determined interface. Otherwise, the narrative engine continues in step **1305** to determine whether the designated interaction

request corresponds to a measurement request. If so, then the narrative engine continues in step **1309** to determine which measurement interface to invoke and then invokes the determined interface. Otherwise, the narrative engine continues in step **1306** to determine whether the designated interaction request corresponds to a manipulation request. If so, the narrative engine continues in step **1310** to determine which manipulation interface to invoke and then invokes the determined interface. Otherwise, the designated interaction request is unknown, and the narrative engine continues in step **1311**. (The narrative engine may invoke some other default behavior when an unknown interaction request is designated.) In step **1311**, the narrative engine determines whether the previously determined conditions required to advance the narrative to the next state have been satisfied. If so, the narrative engine continues in step **1312** to advance the state of the narrative engine to the next state indicated by the matched conditions, otherwise continues to wait for the next interaction request. Once the narrative state has been advanced, the narrative engine returns to the beginning of the event loop in step **1301** to wait for the next interaction request.

[**0074**] As indicated in **FIG. 13**, the narrative engine needs to determine which interaction routine to invoke (steps **1307-1310**). One skilled in the art will recognize that any of the interaction routines including a detection routine can be specific to a simulated phenomenon, a device, an environment, or some combination of any such factors or similar factors. Also, depending upon the architecture of the system, the overall detection routine (which calls specific detection functions) may be part of the narrative engine, a model, or stored in one of the data repositories.

[**0075**] **FIG. 14** is an example flow diagram of an example detection interaction routine provided by a simulation engine of a Simulated Phenomena Interaction System. This routine may reside and be executed by the narrative engine portion of the simulation engine. In the example shown in **FIG. 14**, the Detect_SP routine (the overall detection routine) includes as input parameters the factors needed to be considered for detection. In this example, the Detect_SP routine receives a designated identifier of the particular simulated phenomenon (SP_-id), a designated identifier of the device (Dev_id), any designated number of attributes and values that correspond to the device (Dev_attrib_list), and the current narrative state information associated with the current narrative state (narr_state). The current narrative state information contains, for example, the information determined by the narrative engine in step **1301** of the Receive Interaction Request routine. The detection routine, as common to all the interaction routines, determines given the designed parameters whether the requested interaction is possible, invokes the interaction, and returns the results of the interaction or any other feedback so that it can be in turn reported to the mobile device via the narrative engine.

[**0076**] Specifically, in step **1401**, the routine determines whether the detector is working, and, if so, continues in step **1404** else continues in step **1402**. This determination is conducted from the point of view of the narrative, not the mobile device (the detector). In other words, although the mobile device may be working correctly, the narrative may dictate a state in which the client device (the detector) appears to be malfunctioning. In step **1402**, the routine, because the detector is not working, determines whether the mobile device has designated or previously indicated in some manner that the reporting of status information is desirable. If so, the routine continues in step **1403** to report status information to the mobile device (via the narrative engine), and then returns. Otherwise, the routine simply returns without detection and without reporting information. In step **1404**, when the detector is working, the routine determines whether a "sensitivity function" exists for the particular interaction routine based upon the designated SP identifier, device identifier, the type of attribute that the detection is detecting (the type of detection), and similar parameters.

[**0077**] A "sensitivity function" is the generic name for a routine, associated with the particular interaction requested, that determines whether an interaction can be performed and, in some embodiments, performs the interaction if it can be performed. That is, a sensitivity function determines whether the device is sufficiently "sensitive" (in "range" or some other attribute value) to interact with the SP with regard specifically to the designated attribute in the manner requested. For example, there may exist many detection routines available to detect whether a particular SP should be considered "detected" relative to the current characteristics of the requesting mobile device. The detection routine that is eventually selected as the "sensitivity function" to invoke at that moment may be particular to the type of device, some other characteristic of the device, the simulated phenomena being interacted with, or another consideration, such as an attribute value sensed in the real world environment, here shown as "attrib_type." For example, the mobile device may indicate the need to "detect" an SP based upon a proximity attribute, or an agitation attribute, or a "mood" attribute (an example of a completely arbitrary, imaginary attribute of an SP). The routine may determine which sensitivity function to use in a variety of ways. The sensitivity functions may be stored, for example, as a stored procedures in the simulated phenomena characterizations data repository, such as data repository **620** in **FIG. 6**, indexed by attribute type of an SP type. An example routine for finding a sensitivity function and an example sensitivity function are described below with reference to Tables 1 and 2.

[**0078**] Once the appropriate sensitivity function is determined, then the routine continues in step **1405** to invoke the determined detection sensitivity function. Then, in step **1406**, the routine determines as a result of invoking the sensitivity function, whether the simulated phenomenon was considered detectable, and, if so, continues in step **1407**, otherwise continues in step **1402** (to optionally report non-success). In step **1407**, the routine indicates (in a manner that is dependent upon the particular SP or other characteristics of the routine) that the simulated phenomenon is present (detected) and modifies or updates any data repositories and state information as necessary to update the state of the SP, narrative, and potentially the simulated engine's internal representation of the mobile device, to consider the SP "detected." In step **1408**, the routine determines whether the mobile device has previously requested to be in a continuous detection mode, and, if so, continues in step **1401** to begin the detection loop again, otherwise returns.

[**0079**] One skilled in the art will recognize that other functionality can be added and is contemplated to be added to the detection routine and the other interaction routines. For example, functions for adjustment (real or imaginary) of

the mobile device from the narrative's perspective and functions for logging information could be easily integrated into these routines.

TABLE 1

```
1   function Sensitivity (interaction_type, dev_ID, SP_ID,
    att_type1, . . . , att_typeN)
2       For each att_type
3       sensFunction =
    GetSensitivityFunctionForType(interaction_type, att_type)
4           If not sensFunction(SP_ID, dev_ID)
5               Return Not_Detectable
6       End for
7       Return Detectable
8   end function
```

[0080] As mentioned, several different techniques can be used to determine which particular sensitivity function to invoke for a particular interaction request. Because, for example, there may be a different sensitivity calculations not just based upon a type of interaction but also the type of attribute to be interacted with, there may exist a separate sensitivity function on a per-attribute basis for the particular interaction on a per-simulated phenomenon basis (or additionally per device, per user, etc.). Table 1 shows the use of a single overall routine to retrieve multiple sensitivity functions for the particular simulated phenomenon and device combination, one for each attribute being interacted with. (Note that multiple attributes may be specified in the interaction request. Interaction may be a complex function of multiple attributes as well.) Thus, for example, if for a particular simulated phenomenon there are four attributes that need to be detected in order for the SP to be detected from the mobile device perspective, then there may be four separate sensitivity functions that are used to determine whether that attribute of the SP is detectable at that point. Note that, as shown in line 4, the overall routine can also include logic to invoke the sensitivity functions on the spot, as opposed to invoking the function as a separate step as shown in **FIG. 14**.

TABLE 2

```
SensitivityAgitation(SP_ID, dev_ID)
{
    Position positionDev, positionSP;
    long range, dist;
    int agitationSP;
    agitationSP = GetAgitationStateFromSP(SP_ID);
    positionSP = GetPositionOfSP(SP_ID);
    positionDev = GetPositionFromDevice(dev_ID);
    range = agitationSP * 10;
    dist = sqrt((positionSP.x − positionDev.x)^2 +
(positionSP.y − positionDev.y)^2);
    if (dist <= range) then
        return Detectable;
    else
        return Not_Detectable
}
```

[0081] Table 2 is an example sensitivity function that is returned by the routine GetSensitivityFunctionForType shown in Table 1 for a detection interaction for a particular simulated phenomenon and device pair as would be used with an agitation characteristic (attribute) of the simulated phenomenon. In essence, the sensitivity agitation function retrieves an agitation state variable value from the SP characterizations data repository, retrieves a current position from the SP characterization data repository, and receives a current position of the device from the device characterization data repository. The current position of the SP is typically an attribute of the SP, or calculated from such attribute. Further, it may be a function of the current actual location of the device. Note that the characteristics of the SP (e.g., the agitation state) are dependent upon which SP is being addressed by the interaction request, and may also be dependent upon the particular device interacting with a particular SP. Once the values are retrieved, the example sensitivity function then performs a set of calculations based upon these retrieved values to determine whether, based upon the actual location of the device relative to the programmed location of the SP, the SP agitation value is "within range." If so, the function sends back a status of detectable; otherwise, it sends back a status of not detectable.

[0082] As mentioned earlier, the response to each interaction request is in some way based upon a real world physical characteristic, such as the physical location of the mobile device submitting the interaction request. The real world physical characteristic may be sent with the interaction request, sensed from a sensor in some other way or at some other time. A mobile device, depending upon its type, is capable of sensing its location in a variety of ways, some of which are described here. One skilled in the art will recognize that there are many methods for sensing location and are contemplated for use with the SPIS.

[0083] Once the location of the device is sensed, this location can in turn be used to model the behavior of the SP in response to the different interaction requests. For example, the position of the SP relative to the mobile device may be dictated by the narrative to be always a multiple from the current physical location of the user's device until the user enters a particular spot, a room, for example. Alternatively, an SP may "jump away" (exhibiting behavior similar to trying to swat a fly) each time the physical location of the mobile device is computed to "coincide" with the apparent location of the SP. To perform these type of behaviors, the simulation engine typically models both the apparent location of the SP and the physical location of the device based upon sensed information.

[0084] The location of the device may be an absolute location as available with some devices, or may be computed by the simulation engine (modeled) based upon methods like triangulation techniques, the device's ability to detect electromagnetic broadcasts, and software modeling techniques such as data structures and logic that models latitude, longitude, altitude, etc. Examples of devices that can be modeled in part based upon the device's ability to detect electromagnetic broadcasts include cell phones, wireless networking receivers, radio receivers, photo-detectors, radiation detectors, heat detectors, and magnetic orientation or flux detectors. Examples of devices that can be modeled in part based upon triangulation techniques include GPS devices, Loran devices, some E911 cell phones.

[0085] **FIG. 15** is an example diagram illustrating simulation engine modeling of a mobile device that is able to sense its location by detecting electromagnetic broadcasts. For example, when a cell phone is used, it is able to sense when it can receive transmissions from a particular cell tower. This sensed information is then forwarded to the

simulation engine so that the simulation engine can model the position of the device (and subsequently the location of SPs). As a result of the modeling, the simulated engine might determine or be able to deduce that the device is currently situated in a particular real world area (region).

[**0086**] In the example shown in **FIG. 15**, each circle represents an physical area where the device is able to sense an electromagnetic signal from a transmitter, for example, a cell tower if the device is a cell phone. Thus, the circle labeled **#1** represents a physical region where the mobile device is currently able to sense a signal from a first transmitter. The circle labeled **#2** similarly represents a physical region where the mobile device is able to sense a signal from a second transmitter, etc. The narrative, hence the SP, can make use of this information in modeling the location of the SP relative to the mobile device's physical location. For example, the narrative might specify that, when the mobile device demonstrates or indicates that it is in the intersection of the regions **#1** and **#2** (that is the device can detect transmissions from transmitters **#1** and **#2**), labeled in the figure with an "A" and cross-hatching. The narrative may have computed that the effective location of the simulated phenomena is instead in the intersection of regions **#2** and **#3**, labeled in the figure with a "B" and hatching. Thus, the narrative may indicate that a simulated phenomenon is close by the user, but not yet within vicinity; or, if the range of the device is riot deemed to include "B," then the narrative may not indicate presence of the SP at all. The user of the mobile device may have no idea that physical regions **#1** and **#2** (or their intersection) exist—only that the SP is suddenly present and perhaps some indication of relative distance based upon the apparent (real or narrative controlled) range of the device.

[**0087**] A device might also be able to sense its location in the physical world based upon a signal "grid" as provided, for example, by GPS-enabled systems. A GPS-enabled mobile device might be able to sense not only that it is in a physical region, such as receiving transmissions from transmitter **#5**, but it also might be able to determine that it is in a particular rectangular grid within that region, as indicated by rectangular regions **#6-9**. This information may be used to give GPS-enabled device a finer degree of detection than that available from cell phones, for example.

[**0088**] Other devices present more complicated location modeling considerations and opportunities for integration of simulated phenomena into the real world. For example, a wearable display device, such as Wireless 3D Glasses from the eDimensional company, allows a user to "see" simulated phenomena in the same field of vision as real world objects, thus providing a kind of "augmented reality."**FIG. 16** is an example illustration of an example field of vision on a display of a wearable device. The user's actual vision is the area demarcated as field of vision **1601**. The apparent field of vision supported by the device is demarcated by field of vision **1602**. Using SPIS technology, the user can see real world objects **1603** and simulated phenomena **1604** within the field **1602**. One skilled in the art will recognize that appropriate software modeling can be incorporated into a phenomenon modeling component or the simulated phenomena attributes data repository to account for the 3D modeling supported by such devices and enhance them to represent simulated phenomena in the user's field of view.

[**0089**] PDAs with IRDA (infrared) capabilities also present more complicated modeling considerations, for example, a Tungsten T PDA manufactured by Palm Computing. Though this PDA supports multiple wireless networking functions (e.g., Bluetooth & Wi-Fi expansion card), the IRDA version utilizes its Infrared Port for physical location and spatial orientation determination. By pointing the infrared transmitter at an infrared transceiver (which may be an installed transceiver, such as in a wall in a room, or another infrared device, such as another player using a PDA/IRDA device), the direction the user is facing can be supplied to the simulation engine for modeling as well. This may result in producing more "realistic" behavior in the simulation. For example, the simulation engine may be able to better detect when a user has actually pointed the device at an SP to capture it. Similarly, the simulation engine can also better detect two users facing their respective devices at each other (for example, in a simulated battle). Thus, depending upon the device, it may be possible for the SPIS to produce SPs that respond to orientation characteristics of the mobile device as well as location.

[**0090**] **FIG. 17** is an example diagram illustrating simulation engine modeling of a mobile device enhanced with infrared capabilities whose location is sensed by infrared transceivers. In **FIG. 17**, two users of infrared capable mobile devices **1703** and **1706** are moving about a room **1700**. In room **1700**, there are planted various infrared transceivers **1702**, **1704**, and **1705** (and the transceivers in each mobile device **1703** and **1706**), which are capable of detecting and reporting to the simulation engine the respective locations (and even orientations) of the mobile devices **1703** and **1706**. **1701** represents a not-networked infrared source which blinks with a pattern that is recognized by the mobile device. Though no information is transferred to the source from the system, the system can none the less potentially recognize the pattern as the identification of an object in a particular location in the real-world. A simulated phenomenon may even be integrated as part of one of these transceivers, for example, on plant **1708** as embodied in transceiver **1705**. The transceiver reported location information can be used by the simulation engine to determine more accurately what the user is attempting to do by where the user is pointing the mobile device. For example, as currently shown in **FIG. 17**, only the signal from the plant (if the plant is transmitting signals, or, alternatively, the receipt of signal from the device **1703**) is within the actual device detection field **1707** of device **1703**. Thus, the simulation engine can indicate that the SP associated with plant **1708** is detectable or otherwise capable of interaction.

[**0091**] As mentioned, the physical location of the device may be sent with the interaction request itself or may have been sent earlier as part of some other interaction request, or may have been indicated to the simulation engine by some kind of sensor somewhere else in the environment. Once the simulation engine receives the location information, the narrative can determine or modify the behavior of an SP relative to that location.

[**0092**] **FIG. 18** is an example illustration of a display on a mobile device that indicates the location of a simulated phenomenon relative to a user's location as a function of the physical location of the mobile device. As shown, the mobile device **1800** is displaying on the display screen area **1801** an indication in the "spectral detection field"**1802** of the loca-

tion of a particular SP **1804** relative to the user's location **1803**. In an example scenario, the location of the SP **1804** would be returned from the narrative engine in response to a detection interaction request. As described with respect to **FIG. 15**, the relative SP location shown is not likely an absolute physical distance and may not divulge any information to the user about the location modeling being employed in the narrative engine. Rather, the difference between the user's location **1803** and the SP location **1804** is dictated by the narrative and may move as the user moves the mobile device to indicate that the user is getting closer or farther from the SP. These aspects are typically controlled by the narrative logic and SP/device specific. There are many ways that the distances between the SP and a user may be modeled. **FIG. 18** just shows one of them.

[**0093**] Indications of a simulated phenomenon relative to a mobile device are also functions of both the apparent range of the device and the apparent range of the sensitivity function. The latter is typically controlled by the narrative engine but may be programmed to be related to the apparent range of the device. Thus, for example, in **FIG. 18**, the apparent range of the spectra-meter is shown by the dotted line of the detection field **1802**. The range of the detection device may also be controlled by the logic of the narrative engine and have nothing to do with the actual physical characteristics of the device, or may be supplemented by the narrative logic. For example, the range of the spectra-meter may depend on the range of the sensitivity function programmed into the simulator engine. For example, a user may be able to increase the range (sensitivity) of the sensitivity function by adjusting some attribute of the device, which may be imaginary. For example, the range of the spectra-meter may be increased by decreasing the device's ability to display additional information regarding an SP, such as a visual indication of the identity or type of the SP presumably yielding more "power" to the device for detection purposes.

[**0094**] Although the granularity of the actual resolution of the physical device may be constrained by the technology used by the physical device, the range of detectability supported by the narrative engine is controlled directly by the narrative engine. Thus, the relative size between what the mobile device can detect and what is detectable may be arbitrary or imaginary. For example, although a device might have an actual physical range of 3 meters for a GPS, 30 meters for a WiFi connected device, or 100-1000 meters for cell phones, the simulation engine may be able to indicate to the user of the mobile device that there is a detectable SP 200 meters away, although the user might not yet be able to use a communication interaction to ask questions of it at this point.

[**0095**] **FIG. 19** contains a set of diagrams illustrating different ways to determine and indicate the location of a simulated phenomenon relative to a user when a device has a different physical range from its apparent range as determined by the simulation engine. In Diagram A, the range circumscribed by radius R2 represents the strength of a detection field **1902** in which an SP can be detected by a mobile device having an actual physical detection range determined by radius R1. For example, if the mobile device is a GPS, R1 may be 3 meters, whereas R2 may be (and typically would be) a large multiple of R1 such as 300 meters.

[**0096**] In Diagram B, the smaller circle indicates where the narrative has located the SP is relative to the apparent detection range. The larger circle in the center indicates where the user is relative to this same range and is presumed to be a convention of the narrative in this example. When the user progresses to a location that is in the vicinity of an SP (as determined by whatever modeling technique is being used by the narrative engine), then, as shown in Diagram C, the narrative indicates to the user that a particular SP is present. (The big "X" in the center circle might indicate that the user is in the same vicinity of the SP.) This indication may need to be modified based upon the capabilities and physical limitations of the device. For example, if a user is using a device, such as a GPS, that doesn't work inside a building and the narrative has located the SP inside the building, then the narrative engine may need to change the type of display used to indicate the SP's location relative to the user. For example, the display might change to a map that shows an inside of the building and indicate an approximate location of the SP on that map even though movement of the device cannot be detected from that point on. One skilled in the art will recognize that a multitude of possibilities exist for displaying relative SP and user locations based upon and taking into account the physical location of the mobile device and other physical parameters and that the user will perceive the "influence" of the SP on the user's physical environment as long as it continues to be related back to that physical environment.

[**0097**] **FIG. 20** is an example flow diagram of an example measurement interaction routine provided by a simulation engine of a Simulated Phenomena Interaction System. This routine may reside and be executed by the narrative engine portion of the simulation engine. It allows a user via a mobile device to "measure" characteristics of an SP to obtain values of various SP attributes. For example, although "location" is one type of attribute that can be measured (and detected), other attributes such as the "color,""size,""orientation,""mood,""temperament,""age," etc. may also be measured. The definition of an SP in terms of the attributes an SP supports or defines will dictate what attributes are potentially measurable. Note that each attribute may support a further attribute which determines whether a particular attribute is currently measurable or not. This latter degree of measurability may be determine by the narrative based upon or independent of other factors such as the state of the narrative, or the particular device, user, etc.

[**0098**] Specifically, in step **2001**, the routine determines whether the measurement meter is working, and, if so, continues in step **2004** else continues in step **2002**. This determination is conducted from the point of view of the narrative, not the mobile device (the meter). Thus, although the metering device appears to be working correctly, the narrative may dictate a state in which the device appears to be malfunctioning. In step **2002**, the routine, because the meter is not working, determines whether the device has designated or previously indicated in some manner that the reporting of status information is desirable. If so, the routine continues in step **2003** to report status information to the mobile device (via the narrative engine) and then returns. Otherwise, the routine simply returns without measuring anything or reporting information. In step **2004**, when the meter is working, the routine determines whether a sensitivity function exists for a measurement interaction routine based upon the designated SP identifier, device identifier,

and the type of attribute that the measurement is measuring (the type of measurement), and similar parameters. As described with reference to Tables 1 and 2, there may be one sensitivity function that needs to be invoked to complete the measurement of different or multiple attributes of a particular SP for that device. Once the appropriate sensitivity function is determined, then the routine continues in step **2005** to invoke the determined measurement sensitivity function. Then, in step **2006**, the routine determines as a result of invoking the measurement related sensitivity function, whether the simulated phenomenon was measurable, and if so, continues in step **2007**, otherwise continues in step **2002** (to optionally report non-success). In step **2007**, the routine indicates the various measurement values of the SP (from attributes that were measured) and modifies or updates any data repositories and state information as necessary to update the state of the SP, narrative, and potentially the simulated engine's internal representation of the mobile device, to consider the SP "measured." In step **2008**, the routine determines whether the device has previously requested to be in a continuous measurement mode, and, if so, continues in step **2001** to begin the measurement loop again, otherwise returns.

[**0099**] **FIG. 21** is an example flow diagram of an example communicate interaction routine provided by a simulation engine of a Simulated Phenomena Interaction System. This routine may reside and be executed by the narrative engine portion of the simulation engine. It allows a user via a mobile device to "communicate" with a designated simulated phenomenon. For example, communication may take the form of questions to be asked of the SP. These may be pre-formulated questions (retrieved from a data repository and indexed by SP, for example) which are given to a user in response to any request that indicates that the user is attempting communication with the SP, such as by typing: Talk or by pressing a Talk button. Alternatively, the simulation engine may incorporate an advanced pattern matching or natural language engine similar to a search tool. The user could then type in a newly formulated question (not canned) and the simulation engine attempt to answer it or request clarification. In addition, the SP can communicate with the user in a variety of ways, including changing some state of the device to indicate its presence, for example, blinking a light. Or, to simulate an SP speaking to a mobile device that has ringing capability (such as a cell phone), the device might ring seemingly unexpectedly. Also, pre-formulated content may be streamed to the device in text, audio, or graphic form, for example. One skilled in the art will recognize that many means to ask questions or hold "conversations" with an SP exist, or will be developed, and such methods can be incorporated into the logic of the simulation engine as desired. Whichever method is used, the factors that are to be considered by the SP in its communication with the mobile device are typically designated as input parameters. For example, an identifier of the particular SP being communicated with, an identifier of the device, and the current narrative state may be designated as input parameters. In addition, a data structure is typically designated to provide the message content, for example, a text message or question to the SP. The communication routine, given the designated parameters, determines whether communication with the designated SP is currently possible, and if so, invokes a function to "communicate" with the SP, for example, to answer a posed question.

[**0100**] Specifically, in step **2101**, the routine determines whether the SP is available to be communicated with, and if so, continues in step **2104**, else continues in step **2102**. This determination is conducted from the point of view of the narrative, not the mobile device. Thus, although the mobile device appears to be working correctly, the narrative may dictate a state in which the device appears to be malfunctioning. In step **2102**, the routine, because the SP is not available for communication, determines whether the device has designated or previously indicated in some manner that the reporting of such status information is desirable. If so, the routine continues in step **2103** to report status information to the mobile device of the incommunicability of the SP (via the narrative engine), and then returns. Otherwise, if reporting status information is not desired, the routine simply returns without the communication completing. In step **2104**, when the SP is available for communication, the routine determines whether there is a sensitivity function for communicating with the designated SP based upon the other designated parameters. If so, then the routine invokes the communication sensitivity function in step **2105** passing along the content of the desired communication and a designated output parameter to which the SP can indicate its response. By indicating a response, the SP is effectively demonstrating its behavior based upon the current state of its attributes, the designated input parameters, and the current state of the narrative. In step **2106**, the routine determines whether a response has been indicated by the SP, and, if so, continues in step **2107**, otherwise continues in step **2102** (to optionally report non-success). In step **2107**, the routine indicates that the SP returned a response and the contents of the response, which is eventually forwarded to the mobile device by the narrative engine. The routine also modifies or updates any data repositories and state information to reflect the current state of the SP, narrative, and potentially the simulated engine's internal representation of the mobile device to reflect the recent communication interaction. The routine then returns.

[**0101**] **FIG. 22** is an example flow diagram of an example manipulation interaction routine provided by a simulation engine of a Simulated Phenomena Interaction System. This routine may reside and be executed by the narrative engine portion of the simulation engine. It may be invoked by a user to affect some characteristic of the SP by setting a value of the characteristic or to alter the SPs behavior in some way. For example, in the Spook game, a user invokes a manipulation interaction to vacuum up a ghost to capture it. As another example, in the training scenario, a manipulation interaction function may be used to put a (virtual) box around a contaminant where the box is constructed of a certain material to simulate containment of the contaminating material (as deemed by the narrative). As with the other interaction routines, different characteristics and attributes may be designated as input parameters to the routine in order to control what manipulation sensitivity function is used. Accordingly, there may be specific manipulation functions not only associated with the particular SP but, for example, by which button a user depresses on the mobile device. So, for example, if, for a specific simulation, the device is programmed to invoke certain manipulation interaction functions, then the proper function will be invoked when the user depresses a particular button.

[**0102**] Specifically, in step **2201**, the routine determines whether it is possible to manipulate the designated SP given

the state of the narrative, particular device and user, etc. and, if so, the routine continues in step **2204**, else continues in step **2202**. This determination is conducted from the point of view of the narrative, not the mobile device. Thus, although the mobile device appears to be working correctly, the narrative may dictate a state in which the device appears to be malfunctioning. In step **2202**, because manipulation with the SP is not currently available, the routine determines whether the device has designated or previously indicated in some manner that the reporting of status information is desirable. If so, the routine continues in step **2203** to report the status information to the mobile device (via the narrative engine) and then returns. Otherwise, if reporting status information is not desired, the routine simply returns without communicated with the SP. In step **2204**, when manipulation with the SP is available, the routine determines whether a sensitivity function exists for a communication interaction routine based upon a variety of factors such as those discussed with reference to prior interaction functions. In step **2205**, the routine invokes the determined manipulation sensitivity function passing along any necessary parameters such as the value of an attribute of a device or a value of the SP to be manipulated. In step **2206**, the routine determines as a result of invoking the manipulation sensitivity function whether the simulated phenomenon was successfully manipulated and, if so, continues in step **2207**, otherwise continues in step **2202**. In step **2207**, the routine indicates the results of the particular manipulation requested with the SP, for example reporting a newly set value of an attribute, modifies or updates any data repositories and state information to reflect current state of the SP, narrative, and potentially the simulated engine's internal representation of the mobile device as necessary, and then returns.

[**0103**] All of the above U.S. patents, U.S. patent application publications, U.S. patent applications, foreign patents, foreign patent applications and non-patent publications referred to in this specification and/or listed in the Application Data Sheet, including but not limited to U.S. Provisional Patent Application No. 60/380,552, entitled "MOBILE DEVICE FOR INTERACTION WITH SIMULATED PHENOMENON," filed May 13, 2002, are incorporated herein by reference, in their entirety.

[**0104**] From the foregoing it will be appreciated that, although specific embodiments of the invention have been described herein for purposes of illustration, various modifications may be made without deviating from the spirit and scope of the invention. For example, one skilled in the art will recognize that the methods and systems for interacting with simulated phenomena discussed herein are applicable to other architectures other than a client-server architecture. For example, using a fat client device, the entire experience of the simulation environment can be self contained. In addition, although described herein with reference to a mobile device, one skilled in the art will recognize that the mobile device need not be transported to work with the system and that a non-mobile device may be used as long as there is some other means of sensing information about the user's real world environment and forwarding that information to the SPIS. One skilled in the art will also recognize that the methods and systems discussed herein are applicable to differing protocols, communication media (optical, wireless, cable, etc.) and devices (such as wireless handsets, electronic organizers, personal digital assistants, portable email machines, game machines, pagers, navigation devices such as GPS receivers, etc.) whether or not they are explicitly mentioned herein.

1. A method for interacting with a computer-controlled simulated phenomenon according to a narrative, comprising:

receiving an indication from a mobile device to interact with the simulated phenomenon;

performing the indicated interaction as a function of both an attribute of the simulated phenomenon and an attribute of the mobile device, the attribute of the mobile device based upon a physical characteristic associated with the mobile device in the real world, and

causing an action to occur based upon the indicated interaction and the narrative.

2. The method of claim 1 wherein the interaction is at least one of detecting, measuring, communicating with, and manipulating.

3. The method of claim 2 wherein the detecting returns an indication of whether the simulated phenomenon is currently detectable by the mobile device.

4. The method of claim 3 wherein whether the simulated phenomenon is currently detectable is based upon one of an apparent range of detection of the device and an actual range of detection of the device.

5. The method of claim 2 wherein the detecting returns an indication of the simulated phenomenon when the presence of the simulated phenomenon is determined to be relevant to the narrative.

6. The method of claim 2 wherein the measuring returns an indication of a value of an attribute of the simulated phenomenon.

7. The method of claim 6 wherein the indication of the value of the attribute is returned when the indicated interaction is determined to be relevant to the narrative.

8. The method of claim 2 wherein the communicating with the simulated phenomenon causes information to be returned to the device.

9. The method of claim 2 wherein the manipulating of the simulated phenomenon causes an attribute of the simulated phenomenon to be modified.

10. The method of claim 1 wherein the physical characteristic associated with the mobile device is based upon the physical location of the mobile device.

11. The method of claim 10 wherein the physical location is the actual physical location.

12. The method of claim 1 wherein the simulated phenomenon has an imaginary aspect.

13. The method of claim 1 wherein the simulated phenomenon simulates at least one of a real world event and real world object.

14. The method of claim 1 wherein the value of the attribute of the simulated phenomenon is based upon the physical location of the mobile device.

15. The method of claim 1 wherein the mobile device is at least one of a personal digital assistant (PDA), a telephone, a global positioning system (GPS), a cell phone, a portable computing device, a vehicle, a wearable device, a robot, and a portable gaming device.

16. The method of claim 1 wherein the action changes a behavior of the simulated phenomenon as a result of the interaction.

17. The method of claim 16 wherein the change is accomplished by setting a value of an attribute of the simulated phenomenon.

18. The method of claim 1 wherein the causing of the action is part of performing the indicated interaction.

19. The method of claim 1 wherein the narrative is part of a computer game.

20. The method of claim 1 wherein the narrative is part of a training system.

21. The method of claim 20 wherein the training system is used to train in the use of mobile biohazard detectors.

22. The method of claim 20 wherein the training system is used to simulate detection of one of contagions and airborne contaminants.

23. The method of claim 20 wherein the training system is used to rate operators in the use of mobile biohazard detectors.

24. The method of claim 1 wherein the action modifies the narrative.

25. The method of claim 24 wherein the narrative logic is modified.

26. The method of claim 24, the narrative further comprising a sequence of events, wherein the order of the sequence of events of the narrative is modified.

27. The method of claim 24 wherein the action modifies narrative data.

28. The method of claim 1 wherein the narrative is modified by a moderator.

29. The method of claim 1 wherein the narrative is modified by changes that occur in a real world environment.

30. The method of claim 1 wherein the attribute of the simulated phenomenon is modified by a moderator.

31. The method of claim 1, the simulated phenomenon associated with a detection area in which the simulated phenomenon is deemed detectable by the mobile device, wherein the physical location of the device indicates that the device is outside of the detection area, and the device is able to interact with the simulated phenomenon in ways other than detection.

32. The method of claim 31 wherein the ways the device is able to interact from outside of the detection area include at least one of measurement of, communication with, and manipulation of the simulated phenomenon.

33. The method of claim 1 wherein the action causes information to be indicated to the mobile device regarding an attribute value of the simulated phenomenon.

34. A simulation engine for interacting with a computer-controlled simulated phenomenon, comprising:

a narrative engine having control flow logic;

a data repository that stores attribute values associated with the simulated phenomenon; and

a simulated phenomenon interaction component, that is structured to

receive an interaction indication from a mobile device;

execute an interaction function based upon the stored attribute values of the simulated phenomenon and a physical characteristic associated with the mobile device in the real world; and

cause an action to occur based upon the executed interaction function and the control flow logic of the narrative engine.

35. The simulation engine of claim 34 wherein the interaction function is at least one of detection, measurement, communication, and manipulation.

36. The simulation engine of claim 35 wherein the interaction component returns an indication of whether the simulated phenomenon is currently detectable by the mobile device when a detection interaction function is executed.

37. The simulation engine of claim 36 wherein whether the simulated phenomenon is currently detectable is based upon one of an apparent range of detection of the device and an actual range of detection of the device.

38. The simulation engine of claim 35 wherein the interaction function returns an indication of successful interaction with the simulated phenomenon when the presence of the simulated phenomenon is determined to be relevant to a state of the narrative engine.

39. The simulation engine of claim 35 wherein the interaction component returns an indication of a value of an attribute of the simulated phenomenon when a measurement interaction function is executed.

40. The simulation engine of claim 39 wherein the indication of the value of the attribute is returned when the indicated interaction is determined to be relevant to the narrative.

41. The simulation engine of claim 35 wherein the interaction component causes information to be returned to the device when a communication function is executed.

42. The simulation engine of claim 35 wherein the interaction component causes an attribute of the simulated phenomenon to be modified when a manipulation function is executed.

43. The simulation engine of claim 34 wherein the physical characteristic associated with the mobile device is based upon the physical location of the mobile device.

44. The simulation engine of claim 43 wherein the physical location is the actual physical location.

45. The simulation engine of claim 34 wherein one of the attributes of the simulated phenomenon represents an imaginary aspect.

46. The simulation engine of claim 34 wherein the simulated phenomenon simulates at least one of a real world event and real world object.

47. The simulation engine of claim 34 wherein the value of an attribute of the simulated phenomenon is based upon the physical location of the mobile device.

48. The simulation engine of claim 34 wherein the mobile device is at least one of a personal digital assistant (PDA), a telephone, a global positioning system (GPS), a cell phone, a portable computing device, a vehicle, a wearable device, a robot, and a portable gaming device.

49. The simulation engine of claim 34 wherein the action changes a behavior of the simulated phenomenon as a result of executing the interaction function.

50. The simulation engine of claim 34 wherein the causing of the action is part of executing the interaction function.

51. The simulation engine of claim 34 wherein the narrative engine is part of a computer game.

52. The simulation engine of claim 34 wherein the narrative engine is part of a training system.

53. The simulation engine of claim 52 wherein the training system is used to train in the use of mobile biohazard detectors.

54. The simulation engine of claim 34 wherein the action modifies data associated with the narrative engine.

55. The simulation engine of claim 34 wherein data associated with the narrative engine is modified by a moderator.

56. The simulation engine of claim 34 wherein data associated with the narrative engine is modified by changes that occur in a real world environment.

57. The simulation engine of claim 34 wherein an attribute of the simulated phenomenon is modified by a moderator.

58. The simulation engine of claim 34, the simulated phenomenon associated with a detection area in which the simulated phenomenon is deemed detectable by the mobile device, wherein the physical location of the device indicates that the device is outside of the detection area, and the device is able to interact with the simulated phenomenon in ways other than detection.

59. The simulation engine of claim 34 wherein the action causes information to be indicated to the mobile device regarding an attribute value of the simulated phenomenon.

60. The simulation engine of claim 34 wherein the simulation engine is located within the mobile device.

61. The simulation engine of claim 34 comprising at least one component that is located remotely from the other components of the simulation engine.

62. The simulation engine of claim 34, further comprising a sensitivity function that is executed by the interaction component.

63. The simulation engine of claim 34 wherein there is a data storage area for each simulated phenomenon.

64. The simulation engine of claim 63 wherein the data storage area is further arranged by interaction function.

65. The simulation engine of claim 34 wherein there is a data storage area for each interaction function.

66. A computer-readable memory medium containing instructions for controlling a computer processor to interact with a computer-controlled simulated phenomenon according to a narrative, by:

receiving an indication from a mobile device to interact with the simulated phenomenon;

performing the indicated interaction as a function of both an attribute of the simulated phenomenon and an attribute of the mobile device, the attribute of the mobile device based upon a physical characteristic associated with the mobile device in the real world, and

causing an action to occur based upon the indicated interaction and the narrative.

67. The computer-readable memory medium of claim 66 wherein the interaction is at least one of detecting, measuring, communicating with, and manipulating.

68. The computer-readable memory medium of claim 67 wherein the detecting returns an indication of whether the simulated phenomenon is currently detectable by the mobile device.

69. The computer-readable memory medium of claim 68 wherein whether the simulated phenomenon is currently detectable is based upon one of an apparent range of detection of the device and an actual range of detection of the device.

70. The computer-readable memory medium of claim 67 wherein the detecting returns an indication of the simulated phenomenon when the presence of the simulated phenomenon is determined to be relevant to the narrative.

71. The computer-readable memory medium of claim 67 wherein the measuring returns an indication of a value of an attribute of the simulated phenomenon.

72. The computer-readable memory medium of claim 71 wherein the indication of the value of the attribute is returned when the indicated interaction is determined to be relevant to the narrative.

73. The computer-readable memory medium of claim 67 wherein the communicating with the simulated phenomenon causes information to be returned to the device.

74. The computer-readable memory medium of claim 67 wherein the manipulating of the simulated phenomenon causes an attribute of the simulated phenomenon to be modified.

75. The computer-readable memory medium of claim 66 wherein the physical characteristic associated with the mobile device is based upon the physical location of the mobile device.

76. The computer-readable memory medium of claim 75 wherein the physical location is the actual physical location.

77. The computer-readable memory medium of claim 66 wherein an attribute of the simulated phenomenon has an imaginary aspect.

78. The computer-readable memory medium of claim 66 wherein the simulated phenomenon simulates at least one of a real world event and real world object.

79. The computer-readable memory medium of claim 66 wherein the value of the attribute of the simulated phenomenon is based upon the physical location of the mobile device.

80. The computer-readable memory medium of claim 66 wherein the mobile device is at least one of a personal digital assistant (PDA), a telephone, a global positioning system (GPS), a cell phone, a portable computing device, a vehicle, a wearable device, a robot, and a portable gaming device.

81. The computer-readable memory medium of claim 66 wherein the action changes a behavior of the simulated phenomenon as a result of the interaction.

82. The computer-readable memory medium of claim 66 wherein the causing of the action is part of performing the indicated interaction.

83. The computer-readable memory medium of claim 66 wherein the narrative is part of a computer game.

84. The computer-readable memory medium of claim 66 wherein the narrative is part of a training system.

85. The computer-readable memory medium of claim 84 wherein the training system is used to train in the use of mobile biohazard detectors.

86. The computer-readable memory medium of claim 66 wherein the action modifies the narrative.

87. The computer-readable memory medium of claim 66 wherein the narrative is modified by a moderator.

88. The computer-readable memory medium of claim 66 wherein the narrative is modified by changes that occur in a real world environment.

89. The computer-readable memory medium of claim 66 wherein the attribute of the simulated phenomenon is modified by a moderator.

90. The computer-readable memory medium of claim 66, the simulated phenomenon associated with a detection area in which the simulated phenomenon is deemed detectable by the mobile device, wherein the physical location of the device indicates that the device is outside of the detection

area, and the device is able to interact with the simulated phenomenon in ways other than detection.

91. The computer-readable memory medium of claim 66 wherein the action causes information to be indicated to the mobile device regarding an attribute value of the simulated phenomenon.

92. A mobile computer game environment comprising:

a mobile device controlled by an operator; and

a simulation engine that implements a simulated phenomenon according to a narrative for interacting with the simulated phenomenon, the simulation engine structured to

receive an indicated interaction;

perform the indicated interaction based upon at least one attribute of the simulated phenomenon, at least one physical attribute of the mobile device related-to the real world, and the narrative;

and indicate results of the performed interaction.

93. The mobile game environment of claim 92 wherein the environment is the physical world.

94. The mobile game environment of claim 92, further comprising a communications network, and wherein the mobile device communicates with the simulation engine via the communications network.

95. The mobile game environment of claim 94 wherein the communications network is a wireless communications network.

96. The mobile game environment of claim 95 wherein the wireless communications network is the Internet.

97. The mobile game environment of claim 94 wherein the communications network is one of the Internet, a wired network, and an intermittent connection.

98. The mobile game environment of claim 94, further comprising a plurality of mobile devices that communicate with the mobile device via the communications network.

99. The mobile game environment of claim 98 wherein the mobile devices cooperate to provide a multiplayer gaming environment.

100. The mobile game environment of claim 92 wherein the computer game is self-contained within the mobile device, such that the simulation engine resides on the mobile device.

101. The mobile game environment of claim 100, further comprising:

a communications network connection; and

a plurality of mobile devices, each having a communications network connection and that communicate with the mobile device and each other via the communications network connections.

102. The mobile game environment of claim 101 wherein the network connections are connected to a wireless network.

103. The mobile game environment of claim 101 wherein the communications network is one of the Internet, a wired network, and an intermittent connection.

104. The mobile game environment of claim 92 wherein the indicated interaction is at least one of detection, measurement, communication, and manipulation.

105. The mobile game environment of claim 104 wherein the simulation engine returns an indication of whether the simulated phenomenon is currently detectable by the mobile device.

106. The mobile game environment of claim 104 wherein the simulation engine returns an indication of a value of an attribute of the simulated phenomenon.

107. The mobile game environment of claim 104 wherein the simulation engine returns information to the device when the indication interaction is communication with the simulated phenomenon.

108. The mobile game environment of claim 104 wherein the simulation engine causes an attribute of the simulated phenomenon to be modified.

109. The mobile game environment of claim 92 wherein the at least one physical attribute of the mobile device is based upon physical location of the mobile device in the real world.

110. The mobile game environment of claim 109 wherein the physical location is the current physical location.

111. The mobile game environment of claim 92 wherein the environment is used to solve a puzzle.

112. The mobile game environment of claim 92 wherein the environment is used to route the operator based upon clues discovered by interactions with the simulated phenomenon.

113. The mobile game environment of claim 92, further comprising a sensor for detecting aspects of the physical environment in which the mobile device is located.

114. The mobile game environment of claim 113 wherein the sensor detects at least one of ambient light, speed of travel, temperature, heart rate, proximity of surrounding objects, communications network attributes, ambient sound, direction of travel, weather metrics, location of participants, physical object characteristics, text, encoded information, data sources, infrared, and device identification.

115. The mobile game environment of claim 113 wherein the sensor is located remotely from the mobile device.

116. The mobile game environment of claim 92 wherein the mobile device is at least one of a personal digital assistant (PDA), a telephone, a global positioning system (GPS), a cell phone, a portable computing device, a vehicle, a wearable device, a robot, and a portable gaming device.

117. The mobile game environment of claim 92 wherein the results of the performed interaction are indicated to the operator via the mobile device.

118. The mobile game environment of claim 117 wherein the results of the performed interaction are indicated by at least one of visual, auditory, and tactile feedback.

119. The mobile game environment of claim 92 wherein the results of the performed interaction are indicated by changing an attribute of the simulated phenomenon.

120. The mobile game environment of claim 92 wherein the results of the performed interaction are indicated by modifying the narrative.

121. The mobile game environment of claim 92, the simulation engine further comprising:

at least one data repository for storing characteristics of the simulated phenomenon; and

a detection code component.

122. The mobile game environment of claim 121, further comprising at least one of a measurement code component, a communications code component, and a manipulation code component.

123. The mobile game environment of claim 92 wherein the simulated phenomenon has an imaginary aspect.

124. A method in a computer game environment having a mobile device and a simulation engine that implements a simulated phenomenon and narrative logic, comprising:

under control of the mobile device, indicating a desired interaction to the simulation engine;

under control of the simulation engine

receiving the indicated interaction;

performing the indicated interaction based upon at least one attribute of the simulated phenomenon, at least one physical attribute of the mobile device related to the real world, and the narrative logic; and

indicating results of the performed interaction.

125. The method of claim 124 wherein the environment is the physical world.

126. The method of claim 124, further comprising a communications network, and wherein the mobile device communicates with the simulation engine via the communications network.

127. The method of claim 126 wherein the communications network is one of a wireless communications network, the Internet, a wired network, and an intermittent connection.

128. The method of claim 126 wherein the mobile device cooperates with an other mobile device to provide a multiplayer gaming environment.

129. The method of claim 124 wherein the computer game is self-contained within the mobile device, such that the simulation engine resides on the mobile device.

130. The method of claim 124 wherein the indicated interaction is at least one of detection, measurement, communication, and manipulation.

131. The method of claim 130 wherein the simulation engine returns an indication of whether the simulated phenomenon is currently detectable by the mobile device.

132. The method of claim 130 wherein the simulation engine returns an indication of a value of an attribute of the simulated phenomenon.

133. The method of claim 130 wherein the simulation engine returns information to the device when the indication interaction is communication with the simulated phenomenon.

134. The method of claim 130 wherein the simulation engine causes an attribute of the simulated phenomenon to be modified.

135. The method of claim 124 wherein the at least one physical attribute of the mobile device is based upon physical location of the mobile device in the real world.

136. The method of claim 124 wherein the method is used to solve a puzzle.

137. The method of claim 124 wherein the method is used to route the operator based upon clues discovered by interactions with the simulated phenomenon.

138. The method of claim 124, further comprising sensing aspects of the physical environment in which the mobile device is located.

139. The method of claim 138 wherein the sensing detects at least one of ambient light, speed of travel, temperature, heart rate, proximity of surrounding objects, communications network attributes, ambient sound direction of travel, weather metrics, location of participants, physical object characteristics, text, encoded information, data sources, infrared, and device identification.

140. The method of claim 124 wherein the results of the performed interaction are indicated by at least one of visual, auditory, and tactile feedback.

141. The method of claim 124 wherein the results of the performed interaction are indicated by changing an attribute of the simulated phenomenon.

142. The method of claim 124 wherein the results of the performed interaction are indicated by modifying the narrative.

143. The method of claim 124 wherein the simulated phenomenon has an imaginary aspect.

144. A computer-based simulation training environment for training an operator to interact with a physical phenomenon, comprising:

a mobile device that is controlled by the operator; and

a simulation engine that is structured to

simulate the physical phenomenon;

receive an interaction request from the mobile device that indicates an attribute associated with the mobile device that is based upon a real world characteristic; and

cause an interaction with the simulated physical phenomenon according to control flow logic of a narrative, based at least in part on the indicated attribute of the mobile device and an attribute of the simulated physical phenomenon.

145. The simulation training environment of claim 144 wherein the physical phenomenon is simulated by approximating at least one of actual and imaginary conditions.

146. The simulation training environment of claim 144 wherein the interaction is one of detection of, measurement of, communication with, and manipulation of the simulated physical phenomenon.

147. The simulation training environment of claim 146 wherein the detection returns an indication of whether the simulated phenomenon is currently detectable by the mobile device.

148. The simulation training environment of claim 146 wherein the measurement returns an indication of a value of an attribute of the simulated phenomenon.

149. The simulation training environment of claim 146 wherein the communication with the simulated phenomenon causes information to be returned to the device.

150. The simulation training environment of claim 146 wherein the manipulation of the simulated phenomenon causes an attribute of the simulated phenomenon to be modified.

151. The simulation training environment of claim 144 wherein the attribute associated with the mobile device is associated with the physical location of the mobile device.

152. The simulation training environment of claim 151 wherein the physical location is the current physical location.

153. The simulation training environment of claim 144 wherein the simulated phenomenon has an imaginary aspect.

154. The simulation training environment of claim 144 wherein the simulated phenomenon simulates at least one of a real world event and real world object.

155. The simulation training environment of claim 144 wherein the mobile device is at least one of a personal digital assistant (PDA), a telephone, a global positioning system (GPS), a cell phone, a portable computing device, a vehicle, a wearable device, a robot, and a portable gaming device.

156. The simulation training environment of claim 144 wherein the interaction changes a behavior of the simulated phenomenon as a result of the interaction.

157. The simulation training environment of claim 144 wherein the training system is used to simulate biohazardous substance detection.

158. The simulation training environment of claim 144 wherein the narrative is modified by a moderator.

159. The simulation training environment of claim 144 wherein the narrative is modified by changes that occur in a real world environment.

160. The simulation training environment of claim 144, the simulated phenomenon associated with a detection area in which the simulated phenomenon is deemed detectable by the mobile device, wherein the physical location of the device indicates that the device is outside of the detection area, and the device is able to interact with the simulated phenomenon in ways other than detection.

161. The simulation training environment of claim 144 wherein the interaction causes information to be indicated to the mobile device regarding an attribute value of the simulated phenomenon.

162. The simulation training environment of claim 144 wherein the simulated physical phenomenon is at least one of an event, a person, a condition, and an object.

163. The simulation training environment of claim 162 wherein the simulated physical phenomenon is related to at least one of weather, natural hazards, weapons, man-made hazards, diseases, contagions, and airborne particles.

164. The simulation training environment of claim 162 wherein the simulated physical phenomenon is related to terrorist activity.

165. The simulation training environment of claim 162 wherein the simulated physical phenomenon is related to at least one of nuclear, biological, and chemical weapons.

166. The simulation training environment of claim 144 wherein the narrative changes as a result of the caused interaction.

167. The simulation training environment of claim 144 wherein the ability for the interaction to occur is defined by a dynamically modifiable interaction sensitivity function.

168. The simulation training environment of claim 167 wherein the interaction sensitivity function determines one of detectability, measurability, communicability, and manipulability.

169. A method in a computer-based simulation training environment for training an operator to interact with a physical phenomenon, the training environment having a mobile device and a simulation engine that simulates the physical phenomenon and a narrative, comprising:

under control of the mobile device, indicating to the simulation engine a desired interaction that indicates an attribute of the mobile device that is based upon a real world characteristic of the device; and

under control of the simulation engine,

receiving the interaction request; and

causing an interaction to occur with the simulated physical phenomenon according to control flow logic of the narrative, based at least in part on the indicated attribute of the mobile device and an attribute of the simulated physical phenomenon.

170. The method of claim 169 wherein the physical phenomenon is simulated by approximating at least one of actual and imaginary conditions.

171. The method of claim 169 wherein the interaction is one of detection, measurement, communication, and manipulation.

172. The method of claim 171 wherein the detection returns an indication of whether the simulated phenomenon is currently detectable by the mobile device.

173. The method of claim 171 wherein the measurement returns an indication of a value of an attribute of the simulated phenomenon.

174. The method of claim 171 wherein the communication with the simulated phenomenon causes information to be returned the device.

175. The method of claim 171 wherein the manipulation of the simulated phenomenon causes an attribute of the simulated phenomenon to be modified.

176. The method of claim 169 wherein the attribute associated with the mobile device is associated with the physical location of the mobile device.

177. The method of claim 176 wherein the physical location is the current physical location.

178. The method of claim 169 wherein the simulated phenomenon has an imaginary aspect.

179. The method of claim 169 wherein the simulated phenomenon simulates at least one of a real world event and real world object.

180. The method of claim 169 wherein the interaction changes a behavior of the simulated phenomenon as a result of the interaction.

181. The method of claim 169 wherein the training system is used to simulate biohazardous substance detection.

182. The method of claim 169 wherein the narrative is modified by a moderator.

183. The method of claim 169 wherein the narrative is modified by changes that occur in a real world environment.

184. The method of claim 169 wherein the interaction causes information to be indicated to the mobile device regarding an attribute value of the simulated phenomenon.

185. The method of claim 169 wherein the simulated physical phenomenon is at least one of an event, a person, a condition, and an object.

186. The method of claim 185 wherein the simulated physical phenomenon is related to at least one of weather, natural hazards, weapons, man-made hazards, diseases, contagions, and airborne particles.

187. The method of claim 185 wherein the simulated physical phenomenon is related to terrorist activity.

188. The method of claim 185 wherein the simulated physical phenomenon is related to at least one of nuclear, biological, and chemical weapons.

189. The method of claim 169 wherein the narrative changes as a result of the caused interaction.

190. The method of claim 169 wherein the ability for the interaction to occur is defined by a dynamically modifiable interaction sensitivity function.

191. The method of claim 190 wherein the interaction sensitivity function determines one of detectability, measurability, communicability, and manipulability.

192. A simulated phenomenon simulator for interacting with a mobile device having a location-based physical attribute, comprising:

a data repository that stores attribute values of the simulated phenomenon;

a narrative that describes actions that occur when a set of conditions are met and data; and

a simulation control flow logic that causes interactions to occur with the simulated phenomenon by modifying the stored attribute values according to the narrative actions and data and according to the location-based physical attribute of the mobile device.

193. The simulator of claim 192, further comprising causing indications of the interactions with the simulated phenomenon to be returned to the mobile device.

194. The simulator of claim 192 wherein the mobile device contains at least a portion of the simulation control flow logic.

195. The simulator of claim 192 wherein the mobile device contains all components of the simulator.

196. The simulator of claim 192 wherein the mobile device is at least one of a wireless device, a cellular device, and a portable computing device.

197. A mobile device for interacting with a computer-based simulation engine that implements a simulated phenomenon having at least one attribute based upon sensing a real world physical attribute and that performs interactions with the simulated phenomenon, each interaction performed as a function of the at least one attribute of the simulated phenomenon, and an attribute of the mobile device, comprising:

a sensor that determines a value of an attribute associated with the physical environment of the mobile device;

an output module that indicates to the simulation engine to perform a desired one of the interactions with the simulated phenomenon, the indication including the value of the attribute determined by the sensor; and

an input module for receiving indications from the simulation engine of the performed interaction with the simulated phenomenon.

198. The mobile device of claim 197 wherein at least a portion of the simulation engine is located remotely from the mobile device, and further comprising a communications interface used by the input module and output module to communicate with the simulation engine portion.

199. The mobile device of claim 198 wherein the communications interface connects to at least one of a wireless network, a wired network, Internet, and an intermittent network.

200. The mobile device of claim 198 wherein the portion is at least one of narrative logic, a narrative engine, stored characterizations of the simulated phenomenon, stored characterizations of the mobile device, and stored characterizations of an operator.

201. The mobile device of claim 197 wherein the entire simulation engine is contained within the mobile device.

202. The mobile device of claim 197 wherein the entire simulation engine is located remotely from the mobile device.

203. The mobile device of claim 197, further comprising:

a second mobile device;

a communications interface for communicating with the second mobile.

204. The mobile device of claim 203 wherein the communications interface communicates to a network that is at least one of a wireless network, a wired network, Internet, and an intermittent network.

205. The mobile device of claim 203 wherein the communications interface is a Bluetooth protocol based interface.

206. The mobile device of claim 203 wherein the mobile devices communicate to interact with the simulated phenomenon.

207. The mobile device of claim 203 wherein the simulation engine implements a computer game and the mobile devices communicate to play the computer game.

208. The mobile device of claim 203 wherein the sensor determines at least one of ambient light, speed of travel, temperature, heart rate, proximity of surrounding objects communications network attributes, ambient sound, direction of travel, weather metrics, location of participants, physical object characteristics, text, encoded information, data sources, infrared, and device identification.

209. The mobile device of claim 197 wherein the input module receives data regarding attributes associated with the simulated phenomenon.

210. The mobile device of claim 197 wherein the indications received by the input module are instructions regarding further interactions with the simulated phenomenon.

211. The mobile device of claim 197 wherein the indicated desired interaction is at least one of detection, measurement, communication, and manipulation.

212. The mobile device of claim 197 used in a computer game environment.

213. The mobile device of claim 197 used in a computer-based simulation training environment.

214. The mobile device of claim 197 wherein the training environment is related to simulating at least one of weather, natural hazards, weapons, man-made hazards, diseases, contagions, and airborne particles.

215. The mobile device of claim 197 wherein the training environment is related to at least one of terrorist activity and military situations.

216. The mobile device of claim 197 wherein the training environment is related at least one of nuclear, biological, and chemical weapons.

217. A method in a mobile device for interacting with a computer-based simulation engine that implements a simulated phenomenon having at least one attribute based upon a real world physical attribute, and that performs interactions with the simulated phenomenon, each interaction performed as a function of the at least one attribute of the simulated phenomenon and a physical attribute of the mobile device, comprising:

sensing a value of an attribute associated with the physical environment of the mobile device;

sending an indication to the simulation engine of a desired one of the interactions to be performed, the indication including the sensed value of the attribute; and

receiving indications from the simulation engine of the performed interaction with the simulated phenomenon.

218. The method of claim 217, further comprising:

communicating with an other mobile device using a communications interface.

219. The method of claim 217 wherein the communications interface connects to the other mobile device using an intermittent wireless protocol such as Bluetooth.

220. The method of claim 217 wherein the communications interface connects to at least one of a wireless network, wired network, and Internet.

221. The method of claim 217 wherein the mobile devices communicate to interact with the simulated phenomenon.

222. The method of claim 217 wherein the indicated desired interaction is one of detection, measurement, communication, and manipulation.

223. The method of claim 217 used in a computer game.

224. The method of claim 217 used in a computer-based simulation training environment.

225. A computer-readable memory medium containing instructions for controlling a computer processor to interact with a computer-based simulation engine that implements a simulated phenomenon having at least one attribute based upon a real world physical attribute, and that performs interactions with the simulated phenomenon, each interaction performed as a function of the at least one attribute of the simulated phenomenon and a physical attribute of the mobile device, by:

sensing a value of an attribute associated with the physical environment of the mobile device;

sending an indication to the simulation engine of a desired one of the interactions to be performed, the indication including the sensed value of the attribute; and

receiving indications from the simulation engine of the performed interaction with the simulated phenomenon.

226. The computer-readable memory medium of claim 225, the instructions further controlling the computer processor by:

communicating with an other mobile device using a communications interface.

227. The computer-readable memory medium of claim 225 wherein the communications interface connects to the other mobile device using an intermittent wireless protocol such as Bluetooth.

228. The computer-readable memory medium of claim 225 wherein the communications interface connects to at least one of a wireless network, wired network, and Internet.

229. The computer-readable memory medium of claim 225 wherein the mobile devices communicate to interact with the simulated phenomenon.

230. The computer-readable memory medium of claim 225 wherein the indicated desired interaction is one of detection, measurement, communication, and manipulation.

231. The computer-readable memory medium of claim 225 used in a computer game.

232. The computer-readable memory medium of claim 225 used in a computer-based simulation training environment.

233. A computer-readable memory medium containing instructions for controlling a computer process to simulate interactions between a simulated phenomenon and a mobile device, comprising:

detection instructions that determine whether, given a current state of the device, a modeled state of the device based upon the current state, and a model of characteristics of the simulated phenomenon, the simulated phenomenon is detectable by the mobile device; and

additional interaction instructions that perform at least one of measurement of an attribute of the simulated phenomenon, communication with the simulated phenomenon, and manipulation of an attribute of the simulated phenomenon.

234. The memory medium of claim 233 wherein the detection instructions determine whether the simulated phenomenon is detectable also based upon a narrative stored in the memory medium.

235. The memory medium of claim 233 wherein the determination of whether the simulated phenomenon is detectable is achieved using a sensitivity function.

236. A computer-controlled guide for guiding an operator of a mobile device to transit in a direction determined by the guide, comprising:

a sensing component that is structured to sense values for an attribute of the real world environment associated with the mobile device;

a simulated phenomena simulation engine that is structured to,

receive indications from the sensing component of sensed values of the attribute of the real world environment;

cause simulated phenomena to be presented via the mobile device in a manner that leads the operator to transit in the determined direction, the presentation of the simulated phenomena being based in part on the received sensed values.

237. The guide of claim 236 used for directing people to activities in an amusement park.

238. The guide of claim 236 used to direct people to an activity with a shortest waiting time.

239. The guide of claim 236 used to assist players to solve a puzzle.

240. The guide of claim 236 wherein the puzzle is a treasure hunt.

241. A method for interacting with a computer-controlled simulated phenomenon, comprising:

receiving an indication from a mobile device to interact with the simulated phenomenon;

receiving an indication of a value of a real world attribute that is sensed from the environment associated with the mobile device; and

performing the indicated interaction as a function of both an attribute of the simulated phenomenon and an attribute of the mobile device, wherein the behavior of the simulated phenomenon responsive to the indicated interaction is based upon the received indication of the sensed value of the real world attribute and at least one imaginary attribute.

242. The method of claim 241 wherein the indicated interaction is at least one of detection, measurement, communication, and manipulation.

243. The method of claim 241 wherein the sensed value is associated with a location of the mobile device.

244. The method of claim 241 wherein the sensed value is associated with a real world attribute that is not based upon location of the mobile device.

245. The method of claim 241 wherein the simulated phenomenon simulates at least one of a real world event and a real world object.

246. The method of claim 241 wherein the interaction changes a behavior of the simulated phenomenon.

247. A simulation environment for interacting with a computer-controlled simulated phenomenon, comprising:

a sensor that receives an indication of a value of a real world attribute that is sensed from an environment associated with a mobile device; and

a simulation engine that stores data and logic to represent and control the simulated phenomenon, and that is structure to,

receive an indication from the mobile device to interact with the simulated phenomenon;

receive the indication of the value of the real world attribute; and

perform the indicated interaction as a function of both an attribute of the simulated phenomenon and an attribute of the mobile device, wherein the behavior of the simulated phenomenon responsive to the indicated interaction is based upon the received indication of the sensed value of the real world attribute and at least one imaginary attribute.

248. The simulation environment of claim 247 wherein the indicated interaction is at least one of detection, measurement, communication, and manipulation.

249. The simulation environment of claim 247 wherein the sensed value is associated with a location of the mobile device.

250. The simulation environment of claim 247 wherein the sensed value is associated with a real world attribute that is not based upon location of the mobile device.

251. The simulation environment of claim 247 wherein the simulated phenomenon simulates at least one of a real world event and a real world object.

252. The simulation environment of claim 247 wherein the interaction changes a behavior of the simulated phenomenon.

253. A software interface, stored in a computer-readable memory medium, for providing interaction with a simulated phenomenon in a computer-based simulation system, comprising:

sending a value of an attribute of the simulated phenomenon that is based upon a sensed value of a physical attribute in the real world environment.

254. The interface of claim 253 wherein the sent attribute value is broadcast to components of the simulation system according to a push model.

255. The interface of claim 253 wherein the attribute value is sent as a response to a status inquiry of the simulated phenomenon.

256. The interface of claim 253 wherein the interface is stored in a data repository along with the attribute of the simulated phenomenon.

257. The interface of claim 253 wherein the simulated phenomenon is represented as a simulated phenomenon object within the simulation system have data and methods, wherein the data includes the attribute, and wherein the code that sends the value of the attribute is implemented as a method of the simulated phenomenon object.

258. The interface of claim 257 wherein the method is a detection method that determines whether the simulated phenomenon is detectable from a mobile device.

259. The interface of claim 257, the object further comprising:

at least one of a measurement method, a communication method, and a manipulation method for further interaction with the simulated phenomenon.

260. The interface of claim 253 wherein the sensed value of the physical attribute is provided by a sensor in the real world environment associated with a mobile device.

261. The interface of claim 260 wherein the sensor is connected to the mobile device.

262. The interface of claim 253 wherein the sent attribute value is forwarded to a narrative engine of the simulation system.

263. The interface of claim 253 wherein the sent attribute is forwarded to a mobile device.

* * * * *