UNITED STATES PATENT AND TRADEMARK OFFICE

BEFORE THE PATENT TRIAL AND APPEAL BOARD

META PLATFORMS, INC.,
Petitioner

v.

MULLEN INDUSTRIES LLC,
Patent Owner.

Case IPR2025-00740
U.S. Patent No. 10,828,559 B2
Issue Date: November 10, 2020

Title: LOCATION-BASED GAMES AND AUGMENTED REALITY SYSTEMS

DECLARATION OF JEREMY COOPERSTOCK, PH.D.

TABLE OF CONTENTS

Page

I. INTRODUCTION AND QUALIFICATIONS 4
A. Qualifications and Experience 4
B. Materials Considered 9
II. PERSON OF ORDINARY SKILL IN THE ART 10
III. STATEMENT OF LEGAL PRINCIPLES 13
A. Claim Construction 13
B. Obviousness (§ 103) 15
IV. THE '559 PATENT 21
A. Overview of the Specification 21
B. The Challenged Claims 24
V. APPLICATION OF THE PRIOR ART TO CHALLENGED CLAIMS 25
A. Brief Summary and Overview of Prior Art 26
1. Jaszlics (EX1003) 26
2. Rallison (EX1004) 30
3. Sofer (EX1008) 33
4. Ronzani (EX1009) 35
B. Ground 1: Claims 1, 12, 17, and 20 Are Obvious Over Jaszlics in view of Rallison, Sofer, and Ronzani 39
1. Independent Claim 1: "A head-mounted device comprising:" (claim 1[pre]) 39
(a) "a processor;" (Claim 1[a]) 41
(b) "a display that displays 3-D video game indicia with respect to a physical playfield based on video game logic associated with a video game;" (Claim 1[b]) 47

TABLE OF CONTENTS
(continued)

Page

(c) "a detector for determining landscape characteristics of said physical playfield, wherein said video game logic utilizes said landscape characteristics in providing said video game; and" (Claim 1[c]) 57

(d) "a device for updating the physical location of said device on said physical playfield, wherein said video game logic utilizes the physical location of said device in providing said video game." (Claim 1[d]).....77

2. Claim 12: "The head-mounted device of claim 1, wherein said display is a non-transparent display, said device includes an accelerometer, and said detector includes a camera." 85

(a) "said display is a non-transparent display".....85

(b) "said device includes an accelerometer" 89

(c) "said detector includes a camera".....92

3. Claim 17: "The head-mounted device of claim 1, wherein the pitch, roll, and direction of said head-mounted display are utilized in said video game." 93

4. Claim 20: "The head-mounted device of claim 1, wherein said detector is utilized before the start of said video game." 95

V. NO SECONDARY CONSIDERATIONS OF NONOBVIOUSNESS 97

VI. CONCLUSION 98

I, Jeremy Cooperstock, Ph.D., declare as follows:

I. INTRODUCTION AND QUALIFICATIONS

A. Qualifications and Experience

1. I am an expert in the field of interactive computing systems, including virtual and augmented reality systems, as well as mobile and wearable technologies. I have studied, taught, practiced, and researched the design of such interactive computing technologies for over 30 years, and I have been leading research and development activities pertaining to hardware and software designs for interactive virtual and augmented reality computing systems since at least 2007.

2. I have summarized in this section my educational background, work experience, and other relevant qualifications, as reflected in my curriculum vitae, attached to this declaration as **Appendix A.**

3. I earned a Bachelor of Applied Science (B.A.Sc) degree in Electrical Engineering (Computer Engineering Option) with Honors from the University of British Columbia in 1990, a Master of Science (M.Sc.) degree in Computer Science from the University of Toronto in 1992, and a Doctor of Philosophy (Ph.D.) degree in Electrical and Computer Engineering from the University of Toronto in 1996. My dissertation on "Reactive Environments and Augmented Media Spaces" was nominated by the University of Toronto for the Natural Sciences and Engineering

Research Council (NSERC) Doctoral Dissertation Award.

4. From 1987 to 1988, I worked at IBM Research on very large scale integration (VLSI) circuit simulation, and in 1989, I worked at the IBM T.J. Watson Research Center on very long instruction word (VLIW) simulation. In 1990, I worked at Fibronics Research to develop and test an FDDI-to-token ring bridge for network communication.

5. After obtaining my Doctorate degree, I carried out research and development work at the Sony Computer Science Laboratory in Tokyo, Japan from 1996 to 1997, working in part on "smart" consumer electronics.

6. I have been employed at McGill University since November 1997, where I am currently a Full Professor in the Department of Electrical and Computer Engineering, and recently, the endowed Werner Graupe Distinguished Chair in Automation Engineering.

7. I am a member of the Centre for Intelligent Machines, a founding member of the Centre for Interdisciplinary Research in Music Media and Technology, a member of the International Laboratory on Learning System, a member of the McGill Institute for Aerospace Engineering, and an associate member of Biomedical Engineering at McGill University.

8. In this capacity, I conduct and supervise research activities, directing a

group of approximately 50 researchers at the Shared Reality Lab, which focuses on computer mediation to facilitate high-fidelity human communication and the synthesis of perceptually engaging, multimodal, immersive environments. Over the span of my academic career, I have supervised more than 100 graduate students and post-doctoral fellows, and approximately 250 undergraduate research students.

9. I have also developed and continue to teach courses on human-computer interaction, artificial intelligence, embedded systems, haptic interaction design, computer architecture, and operating systems.

10. I led the development and demonstrations of the world's first high-fidelity multichannel audio streaming system over the Internet in 1999 and 2000, recognized by a Distinction Award from the Audio Engineering Society, and followed in 2005 by simultaneous low-latency transmission of multiple streams of uncompressed high-definition video as part of the McGill Ultra-Videoconferencing system. This work was recognized by an award for Most Innovative Use of New Technology from the Association for Computing Machinery (ACM) and the Institute of Electrical and Electronics Engineers (IEEE) Supercomputing.

11. Among other projects, I led the development and supported ongoing use of a semi-automated classroom environment (the "Intelligent Classroom"), a high-fidelity orchestra rehearsal simulator ("Open Orchestra,"), a simulation

environment that renders graphic, audio, and vibrotactile effects in response to footsteps ("Natural Interactive Walking"), and a mobile game treatment for amblyopia that was licensed to Novartis.

12. The research and development I supervised on the Autour project earned the Hochhausen Research Award from the Canadian National Institute for the Blind and an Impact Award from the Canadian Internet Registry Association. My Real-Time Emergency Response project won the Gold Prize (brainstorm round) of the Mozilla Ignite Challenge. I have carried out significant research involving design and implementation of haptic feedback systems, virtual and augmented reality, and mobile computing applications. My research experience includes design of systems employing virtual and augmented reality devices for simulation, training, gaming, distributed performance, and medical applications, as well as the use of various sensor technologies including GPS, WiFi and Bluetooth, and inertial measurement units (IMUs) for tracking position and orientation of a user.

13. My research activities are funded by industry contracts, collaboration programs, and government grants. In the past 5 years, I have obtained grants and contracts for my research program of approximately three million dollars.

14. I led the theme of Enabling Technologies for a Networks of Centres of Excellence on Graphics, Animation, and New Media (GRAND), and chaired the

Technical Committee on Network Audio Systems. Among other visiting academic appointments, I was a visiting professor at Bang & Olufsen, Denmark, where I conducted research on telepresence technologies as part of the World Opera Project.

15. I have authored and co-authored more than 200 journal articles and peer-reviewed conference proceedings papers, mostly concerning human-computer interaction and applications of these technologies. Eight of my publications were finalists or winners of "best paper", "honorable mention", and similar awards from scholarly societies. A complete list of my publications is contained in my curriculum vitae.

16. My professional affiliations include services in various professional organizations and serving as a reviewer for a number of technical publications, journals, and conferences, which are listed in my curriculum vitae. I served as an Associate Editor of the Journal of the Audio Engineering Society, and presently serve as Associate Editor in Chief for the IEEE Transactions on Haptics, and Associate Editor for the Frontiers in Virtual Reality.

17. I have also served as an expert in numerous legal proceedings, both on behalf of patent owners and petitioners, including proceedings involving industrial design, hardware architecture, and firmware of wearable technologies. A list of cases in which I have provided written declarations, testified at trial or by deposition is

provided in my curriculum vitae.

18. My experience in academic and practical situations as well as my hands-on experience with hardware and software related to virtual and augmented reality systems, provides me with an appreciation of, and expertise in, the technology involved with U.S. Patent No. 10,828,559 B2.

19. I have been retained by counsel for Petitioner to provide my expert opinion in connection with the above-captioned proceeding as set forth herein. I am being compensated for my work in this case at my standard consulting rate. This compensation is not contingent upon my performance, the outcome of this case, or any issues involved in or related to this case. I have no financial interest in this matter.

B. Materials Considered

20. The analysis that I provide in this Declaration is based on my education, research, and experience, as well as the documents I have considered. In forming my opinions, I have read and considered U.S. Patent No. 10,828,559 B2 ("'559 patent") (**EX1001**) and its prosecution history. I have cited to the following documents in my analysis below:

Exhibit No.	Description of Document
1001	U.S. Patent No. 10,828,559 B2 to Jeffrey David Mullen (filed December 14, 2018, issued November 10, 2020) ("**'559**" or "**'559 patent**")
1003	U.S. Patent No. 6,166,744 to Ivan J. Jaszlics et al. (filed Sep. 15, 1998; issued Dec. 26, 2000) ("**Jaszlics**")
1004	U.S. Patent No. 6,369,952 B1 to Richard Dennis Rallison et al. (filed Aug. 17,1999; issued Apr. 9, 2002) ("**Rallison**")
1005	U.S. Patent No. 6,411,266 B1 to Francis J. Maguire, Jr. (filed Nov. 17, 1995; issued Jun. 25, 2002) ("**Maguire**")
1006-1007	(Reserved)
1008	Int'l Patent App. Pub. No. WO 2003/107039 A2 to Eli Sofer et al. (filed Jun. 12, 2003; published Dec. 24, 2003) ("**Sofer**")
1009	U.S. Patent App. Pub. No. 2002/0163486 A1 to Peter A. Ronzani et al. (filed May 16, 1997; published Nov. 7, 2002) ("**Ronzani**")
1010	(Reserved)
1011	U.S. Provisional Patent App. No. 60/066,904 ("**Jaszlics Provisional**")
1012	Excerpts from Microsoft Computer Dictionary (5th ed. 2002)
1013	J. P. Rolland et al., "A Comparison of Optical and Video See-Through Head-Mounted Displays," SPIE Vol. 2351 Telemanipulator and Telepresence Technologies (1994), pp.293-307 ("**Rolland**")
1014	Excerpts from IEEE 100-2000: The Authoritative Dictionary of IEEE Standard Terms (7th ed. 2000)
1015	Excerpts from Joseph Angelo, Dictionary of Space Technology (1999)

II. PERSON OF ORDINARY SKILL IN THE ART

21. I understand that, under the patent laws in effect before the America

Invents Act ("AIA") of 2011, an assessment of claims of a patent filed before the AIA took effect should be undertaken from the perspective of a person of ordinary skill in the art as of the earliest claimed priority date (i.e., the "time the invention was made"). I have preliminarily for purposes of my Declaration only assumed that date to be November 16, 2004, the filing date of the earliest application to which the '559 patent claims priority (provisional application no. 60/628,475).[1]

22. I have also been advised that to determine the appropriate level of a person having ordinary skill in the art, the following factors may be considered: (1) the types of problems encountered by those working in the field and prior art solutions thereto; (2) the sophistication of the technology in question, and the rapidity with which innovations occur in the field; (3) the educational level of active

---

[1] I express no opinion on whether the '559 patent is actually entitled to the benefit of the provisional application to which it claims priority (60/628,475). This issue is not relevant here because all of the prior art references relied upon predate that date. In the event entitlement to the provisional filing date may later become relevant, for example based on arguments later presented by Patent Owner, I reserve my right to provide opinions on that issue at that time.

workers in the field; and (4) the educational level of the inventor.

23. The '559 patent states that it provides "a location-based game system in which the physical location (or physical movement) of a user on a physical playfield" obtained by, for example, a GPS device, "determines the virtual location (or virtual movement) of a virtual character on a virtual playfield." ('559, 7:22-28.) The system may include a head-mounted display so that "video game indicia may be overlaid onto the user's physical playfield," such as the user's "physical environment." ('559, 3:52-54; *see also id.*, 1:57-61 (listing "the physical world, a physical environment, or a defined physical playfield" as examples of a "physical playfield").)

24. In my opinion, a person of ordinary skill in the art as of November 2004 would have possessed a bachelor's degree in electrical engineering, computer science, or similar field, with two years combined experience in designing and/or developing interactive location-based computer systems/software, such as video games or other simulations incorporating location information (such as GPS information associated with a user's physical location), and in designing and/or developing computer systems/software involving graphical virtual and/or augmented reality. A person could also have qualified as a person of ordinary skill in the art with some combination of (1) more formal education (such as a master's

of science degree) and less technical experience, or (2) less formal education and more technical or professional experience.

25. My opinions regarding the level of ordinary skill in the art are based on, among other things, my experience in the fields of computer science and engineering, my understanding of the basic qualifications that would be relevant to an engineer or scientist tasked with investigating methods and systems in the relevant area, and my familiarity with the backgrounds of colleagues and students, both past and present.

26. Although my qualifications and experience exceed those of the hypothetical person having ordinary skill in the art defined above, my analysis and opinions regarding the ’559 patent have been based on the perspective of a person of ordinary skill in the art as of November 2004.

III. STATEMENT OF LEGAL PRINCIPLES

A. Claim Construction

27. I understand that a purpose of claim construction is to determine what a person of ordinary skill in the art would have understood the claim terms to mean. Claim terms are generally given their ordinary and customary meaning, which is the meaning that the term would have to a person of ordinary skill in the art in question as of the effective filing date.

28. I understand that the person of ordinary skill in the art is deemed to read the claim term not only in the context of the particular claim in which the disputed term appears, but in the context of the entire patent, including the specification. I understand that the patent specification, under the legal principles, has been described as the single best guide to the meaning of a claim term, and is thus highly relevant to the interpretation of claim terms. And I understand for terms that do not have a customary meaning within the art, the specification usually supplies the best context of understanding the meaning of those terms.

29. I further understand that other claims of the patent in question, both asserted and unasserted, can be valuable sources of information as to the meaning of a claim term. Because the claim terms are normally used consistently throughout the patent, the usage of a term in one claim can often illuminate the meaning of the same term in other claims. Differences among claims can also be a useful guide in understanding the meaning of particular claim terms.

30. I understand that the prosecution history can further inform the meaning of the claim language by demonstrating how the inventors understood the invention and whether the inventors limited the invention in the course of prosecution, making the claim scope narrower than it otherwise would be. Extrinsic evidence, such as dictionaries, may also be consulted in construing the claim terms.

31. I understand that, in *Inter Partes* Review (IPR) proceedings, a claim of a patent shall be construed using the same claim construction standard that would be used to construe the claim in a civil action filed in a U.S. district court (which I understand is called the "*Phillips*" claim construction standard), including construing the claim in accordance with the ordinary and customary meaning of such claim as understood by one of ordinary skill in the art and the prosecution history pertaining to the patent.

32. I have been instructed by counsel to apply the "*Phillips*" claim construction standard for purposes of interpreting the claims in this proceeding, to the extent they require an explicit construction. The description of the legal principles set forth above thus provides my understanding of the "*Phillips*" standard as provided to me by counsel.

33. For purposes of my analysis here, I do not believe express claim constructions are necessary because the prior art renders the claims obvious under any reasonable construction.

B. Obviousness (§ 103)

34. I understand that a patent claim is obvious if, as of the effective filing date, it would have been obvious to a person having ordinary skill in the field of the technology (the "art") to which the claimed subject matter belongs.

35. I understand that the following factors should be considered in analyzing obviousness: (1) the scope and content of the prior art; (2) the differences between the prior art and the claims; and (3) the level of ordinary skill in the pertinent art. I also understand that certain other facts known as "secondary considerations" such as commercial success, unexplained results, long felt but unsolved need, industry acclaim, simultaneous invention, copying by others, skepticism by experts in the field, and failure of others may be utilized as indicia of nonobviousness. I understand, however, that secondary considerations should be connected, or have a "nexus," with the invention claimed in the patent at issue.

36. I understand that a reference qualifies as prior art for obviousness purposes when it is analogous to the claimed invention. The test for determining what art is analogous is: (1) whether the art is from the same field of endeavor, regardless of the problem addressed, and (2) if the reference is not within the field of the inventor's endeavor, whether the reference still is reasonably pertinent to the particular problem with which the inventor is involved.

37. I understand that a person of ordinary skill in the art is assumed to have knowledge of all prior art. I understand that one skilled in the art can combine various prior art references based on the teachings of those prior art references, the general knowledge present in the art, or common sense. I understand that a

motivation to combine references may be implicit in the prior art, and there is no requirement that there be an actual or explicit teaching to combine two references. Thus, one may take into account the inferences and creative steps that a person of ordinary skill in the art would employ to combine the known elements in the prior art in the manner claimed by the patent at issue. I understand that one should avoid "hindsight bias" and *ex post* reasoning in performing an obviousness analysis. But this does not mean that a person of ordinary skill in the art for purposes of the obviousness inquiry does not have recourse to common sense.

38. I understand that when determining whether a patent claim is obvious in light of the prior art, neither the particular motivation for the patent nor the stated purpose of the patentee is controlling. The primary inquiry has to do with the objective reach of the claims, and that if those claims extend to something that is obvious, then the entire patent claim is invalid.

39. I understand one way that a patent can be found obvious is if there existed at the time of the invention a known problem for which there was an obvious solution encompassed by the patent's claims. I understand that a motivation to combine various prior art references to solve a particular problem may come from a variety of sources, including market demand or scientific literature. I understand that a need or problem known in the field at the time of the invention can also provide

a reason to combine prior art references and render a patent claim invalid for obviousness. I understand that familiar items may have obvious uses beyond their primary purpose, and that a person of ordinary skill in the art will be able to fit the teachings of multiple prior art references together like the pieces of a puzzle. I understand that a person of ordinary skill is also a person of at least ordinary creativity. I understand when there is a design need or market pressure to solve a problem and there are a finite number of identified, predictable solutions, a person of ordinary skill has good reason to pursue the known options within his or her technical grasp. If this finite number of predictable solutions leads to the anticipated success, I understand that the invention is likely the product of ordinary skill and common sense, and not of any sort of innovation. I understand that the fact that a combination was obvious to try might also show that it was obvious, and hence invalid, under the patent laws. I understand that if a patent claims a combination of familiar elements according to known methods, the combination is likely to be obvious when it does no more than yield predictable results. Thus, if a person of ordinary skill in the art can implement a predictable variation, an invention is likely obvious. I understand that combining embodiments disclosed near each other in a prior art reference would not ordinarily require a leap of inventiveness.

40. I understand that obviousness may be shown by demonstrating that it

would have been obvious to modify what is taught in a single piece of prior art to create the patented invention. Obviousness may also be shown by demonstrating that it would have been obvious to combine the teachings of more than one item of prior art. I understand that a claimed invention may be obvious if some teaching, suggestion, or motivation exists that would have led a person of ordinary skill in the art to combine the invalidating references. I also understand that this suggestion or motivation may come from the knowledge of a person having ordinary skill in the art, or from sources such as explicit statements in the prior art. I understand that when there is a design need or market pressure, and there are a finite number of predictable solutions, a person of ordinary skill may be motivated to apply common sense and his skill to combine the known options in order to solve the problem.

41. I understand the following are examples of approaches and rationales that may be considered in determining whether a piece of prior art could have been combined with other prior art or with other information within the knowledge of a person having ordinary skill in the art:

(1) Some teaching, motivation, or suggestion in the prior art that would have led a person of ordinary skill to modify the prior art reference or to combine prior art reference teachings to arrive at the claimed invention;

(2) Known work in one field of endeavor may prompt variations of it for use in the same field or a different field based on design incentives or other market forces if the variations would have been predictable to a person of ordinary skill in the art;

(3) Combining prior art elements according to known methods to yield predictable results;

(4) Applying a known technique to a known device, method, or product ready for improvement to yield predictable results;

(5) Applying a technique or approach that would have been "obvious to try" (choosing from a finite number of identified, predictable solutions, with a reasonable expectation of success);

(6) Simple substitution of one known element for another to obtain predictable results; or

(7) Use of a known technique to improve similar products, devices, or methods in the same way.

42. I understand that, when determining whether a claimed combination is obvious, the correct analysis is not whether one of ordinary skill in the art, writing on a blank slate, would have chosen the particular combination of elements described in the claim. Instead, I understand the correct analysis considers whether

one of ordinary skill, facing the wide range of needs created by developments in the field of endeavor, would have seen a benefit to selecting the combination claimed.

43. I understand that the test for obviousness is not whether the features of a secondary reference may be bodily incorporated into the structure of the primary reference. The test for obviousness, in other words, is not whether the references could be physically combined but whether the claimed inventions are rendered obvious by the teachings of the prior art as a whole.

IV. THE '559 PATENT

A. Overview of the Specification

44. The '559 patent states that it provides "a location-based game system in which the physical location (or physical movement) of a user on a physical playfield" obtained by, for example, a GPS device, "determines the virtual location (or virtual movement) of a virtual character on a virtual playfield." ('559, 7:22-28.) The system may include a head-mounted display so that "video game indicia may be overlaid onto the user's physical playfield," such as the user's "physical environment." ('559, 3:52-54; *see also id.*, 1:57-61 (listing "the physical world, a physical environment, or a defined physical playfield" as examples of a "physical playfield").) "The physical environment can then be manipulated by a processor such that, for example, virtual indicia (e.g., a video game character or component is

added [sic]) is added to the physical environment." ('559, 3:62-65.)

45. The '559 patent further states that "[a] landscape detector may be provided with a location-based game system such that information on the physical terrain of the user's physical environment may be utilized by the gaming system." ('559, 4:20-23.) Figure 4, reproduced below, "is an illustration of landscape detection constructed in accordance with the principles of the present invention":

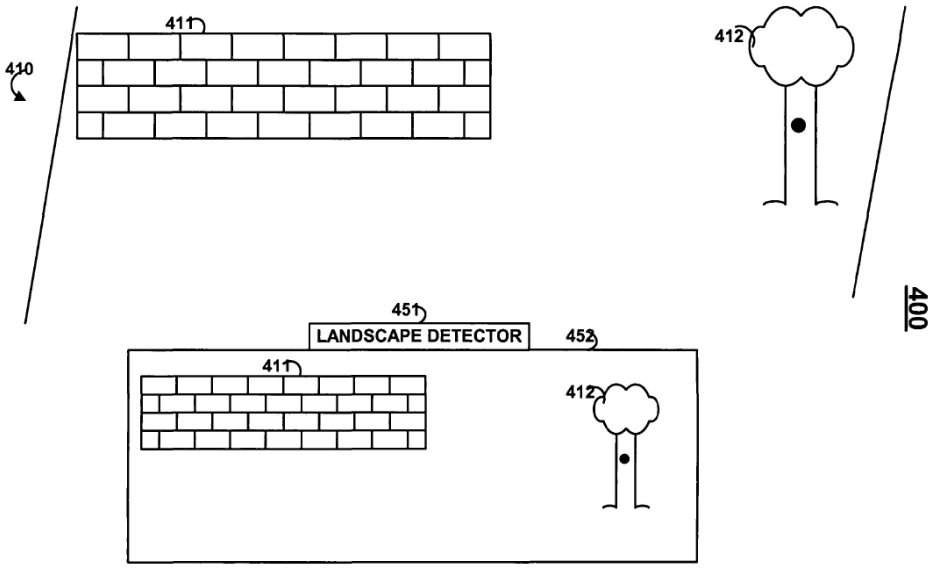

FIG. 4

('559, Fig. 4, 6:14-15.) Referring to Figure 4, the '559 patent states that "[l]andscape detector **451** may take multiple forms":

> For example, landscape detector **451** may measure the distance to objects and the shape of the object. This may be done for example by sound/light sensing (e.g., reflective sensing such as sound/light echoing or color sensing with respect to light source) or any type of

> object/distance sensing (e.g., infrared). A camera may be utilized to take a picture/video of the environment. Video processing features may be utilized to determine landscape as, for example, a user moves around the landscape.

('559, 15:18-27.) "The information provided by the landscape detector may be utilized, for example, to position where portions of a video game playfield, objects, and characters may be positioned on a display (e.g., on a head-mounted display)." ('559, 4:26-29.) "Such information may also be used, for example, to control the movement characteristics of computer-controlled video game characters and indicia." ('559, 4:29-32.) For example, Figure 6, reproduced below, "is an illustration of computer-controlled character positioning and movement based on detected landscape objects constructed in accordance with the principles of the present invention":

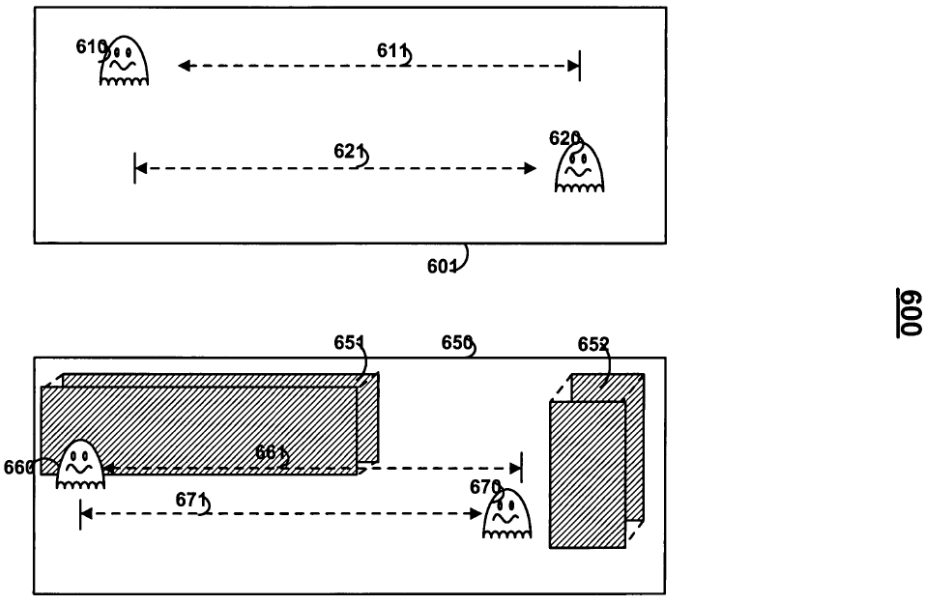

FIG. 6

('559, Fig. 6, 6:20-23.) Referring to Figure 6, the '559 patent states that "[i]n environment **650**, actual environmental object may be present and stored in memory as virtual objects **651** and **652**." ('559, 18:14-16.) "If the stored location of virtual objects **651** impedes on the planned movement of virtual characters, then program logic (e.g., game code) may manipulate the movement path of virtual characters around these virtual objects." ('559, 18:21-25.)

46. I discuss additional aspects of the '559 patent in my analysis of the claims below.

B. The Challenged Claims

47. This Declaration addresses claims 1, 12, 17, and 20 of the '559 patent.

Independent claim 1 is representative and recites:

1. A head-mounted device comprising:

[a] a processor;

[b] a display that displays 3-D video game indicia with respect to a physical playfield based on video game logic associated with a video game;

[c] a detector for determining landscape characteristics of said physical playfield, wherein said video game logic utilizes said landscape characteristics in providing said video game; and

[d] a device for updating the physical location of said device on said physical playfield, wherein said video game logic utilizes the physical location of said device in providing said video game.

('559, 21:43-22:4 (Claim 1; bracketed notation (e.g., **[a]**) added).)

48. I address the claims further in my detailed analysis in **Part V** below.

V. APPLICATION OF THE PRIOR ART TO CHALLENGED CLAIMS

49. I have reviewed and analyzed the prior art references and materials listed in **Part I.B** above. In my opinion the claims of the '559 patent would have been obvious to a person of ordinary skill in the art based on the following combinations of the prior art.

Ground	Claims	Basis for Challenge Under § 103
1	1, 12, 17, 20	Jaszlics in view of Rallison, Sofer, and Ronzani

50. I am informed by counsel that each of the references cited in the grounds above qualifies as prior art to the challenged claims because each reference was filed and/or published before the earliest filing date to which the '559 patent can claim priority (November 16, 2004).

A. Brief Summary and Overview of Prior Art

1. Jaszlics (EX1003)

51. **Jaszlics**, U.S. Patent No. 6,166,744, is entitled "System for Combining Virtual Images with Real-World Scenes." I am informed that Jaszlics qualifies as prior art because it was both filed (on September 15, 1998) and issued (on December 26, 2000) before the earliest priority date of the challenged claims.

52. My analysis primarily relies on Jaszlics, which describes an augmented reality gaming and simulation system that is remarkably similar to the '559 patent. Focusing on war gaming applications, but also making clear that the system is broadly applicable to outdoor location-based augmented reality gaming (Jaszlics, 1:64-67), Jaszlics provides a "combined reality" experience for a user by combining real-time, real-world imagery of a user's physical surroundings with images of virtual entities, such as tanks. (Jaszlics, e.g., 2:60-63.) Using data collected with a

range scanning device (such as a modified infrared surveyor's ranging laser), the distance and shape of real-world physical features are detected and used to more realistically overlay virtual entities in the real-world scene. Referring to Figure 1 (reproduced below), Jaszlics explains:

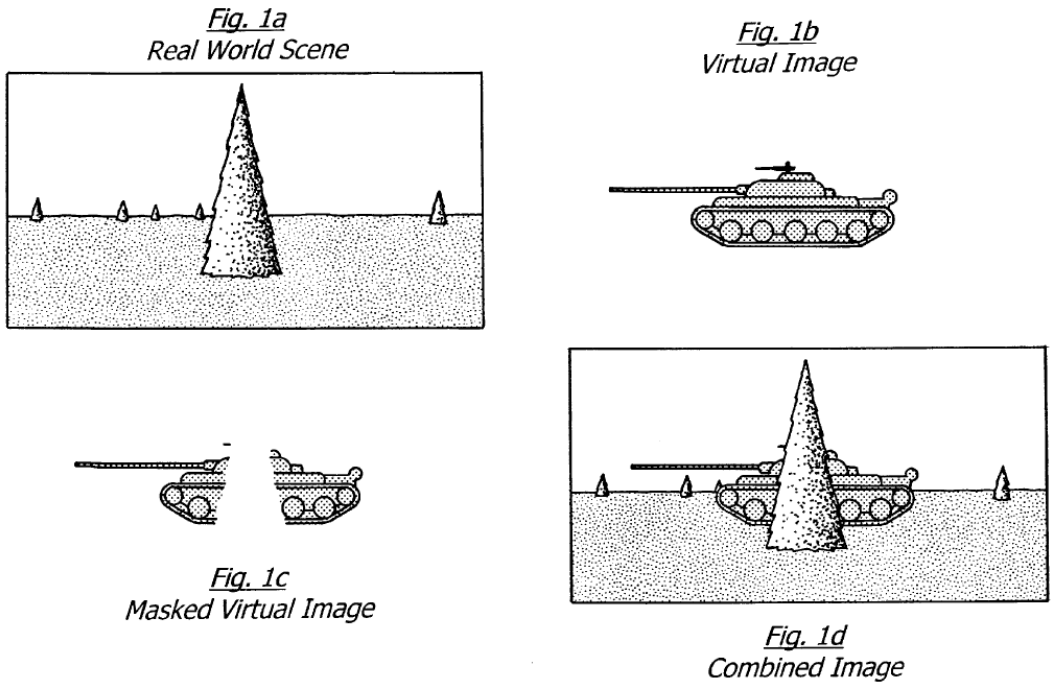

Fig. 1

> An example of the basic functionality of the present invention is demonstrated in FIGS. **1*a*** through **1*d***. The present system combines the image of a real-world scene (FIG. **1*a***) with a virtual image (FIG. **1*b***). The invention provides a method and the description of a reference apparatus and alternative implementations, to sense and remove elements of a virtual image, thereby generating a masked virtual image (FIG. **1*c***). The masked virtual image and the image of the real world are then combined in such a manner that in the resulting combined

> image (FIG. **1*d***) the virtual object will appear to exist and move in the real world at its virtual position.

(Jaszlics, Fig. 1, 4:12-23.) The combined imagery can then be presented via head-mounted display to the user. (Jaszlics, e.g., 9:36 ("an electronic goggle or visor"), 9:48-57 ("virtual reality goggles or visors worn by the observer"), 2:10-13 ("The present invention can be used with electronic display goggles…").)

53. Jaszlics explains that, with its system, a user (which Jaszlics refers to as an "observer"[2]) can participate in various virtual war game scenarios, such as engaging a virtual combat vehicle and taking damage or getting "killed":

> Observer actions include the observer's interactions with virtual elements in the combined reality scene. <u>An example of such direct interaction is the engagement of a virtual opponent from a combat vehicle, such as a battle tank</u>. In this case, the observer (the battle tank's gunner or commander) would observe and track the virtual opponent

---

[2] *See* Jaszlics, 10:11-17 ("<u>The observer **113** of the display is assumed to be the user of the invention</u> for various purposes, such as military training, or entertainment. The observer may interact with the apparatus implementing the invention through observer actions **120** in FIG. **2**. Observer actions include the observer's interactions with virtual elements in the combined reality scene.").)

> embedded in the real-world scene through the tank's actual gun sight, and engage it by depressing the trigger of the tank's main gun. This virtual-live interaction will take place by the observer's actions being captured through the observer's sensors and controls **115** in FIG. **2**.

(Jaszlics, 10:15-25.)[3]

> For example, if one of the virtual tanks represented in this simulation engage the avatar of the observer's tank, the resulting damage information will activate damage displays, or a "killed" indicator in the observer's sensors and controls suite.

(Jaszlics, 11:59-63; *see also id.*, 11:4-6 ("Observer's sensor and controls normally include displays or signals resulting from feedback from the virtual simulation, such as <u>virtual battle damage</u>."), 15:53-56 ("The virtual entities implemented by the virtual simulation and control software are capable of engaging the avatar of the observer's vehicle, depending on the scenario loaded in."); 15:26-30 ("The Zoom Control list box, the AutoTrack check box, and the Fire button in the control frame emulate some of the functions of the controls available to the gunner of a main battle tank, or to the gunner in a tank simulator, for <u>engaging the virtual T-80s operated by the virtual simulation</u>."), 10:39-44 ("Observer actions in the <u>virtual-live</u>

[3] All underlining added quoted material unless noted.

interoperations include magnification (zoom) control of a simulated battle tank gun sight, the tracking of a specific virtual tank, and engagement of a virtual tank being tracked through the simulated gun sight. They also include scenario selection, scenario start, stop, and re-start.”).)

54. I will provide more information about Jaszlics in my discussion of the claim limitations below.

2. Rallison (EX1004)

55. **Rallison**, U.S. Patent No. 6,369,952 B1, is entitled “Head-Mounted Personal Visual Display Apparatus with Image Generator and Holder.” I am informed that Rallison qualifies as prior art because it was both filed (on April 17, 1999) and issued (on April 9, 2002) before the earliest priority date of the challenged claims.

56. My analysis primarily points to Rallison in connection with claim 1**[a]** and claim 12 of the ’559 patent.

57. Claim 1**[a]** recites that the head-mounted device comprises “**a processor**.” Rallison expressly discloses a head-mounted display device that includes a processor. In particular, referring to Figure 8 (shown below), Rallison explains that “image processor circuitry” is contained within “main section **12**” of the head-mounted device:

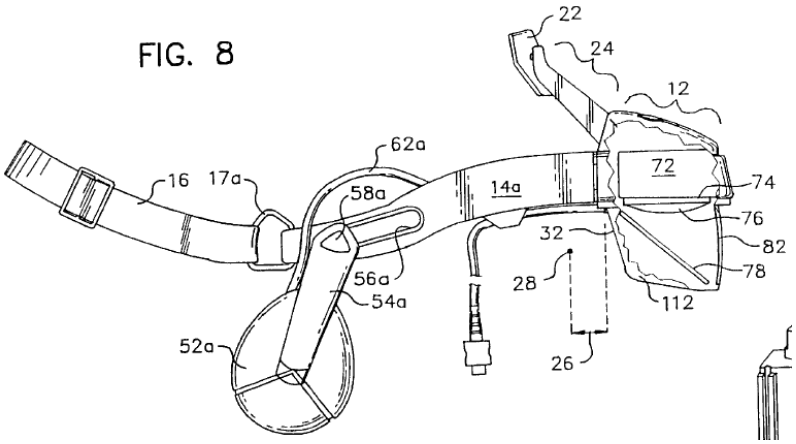

> In one embodiment, the electronics used in generating the image **72** are substantially all contained in the upper portion of the main section **12** of the apparatus as depicted in FIG. 8. The electronics used for this purpose can be those generally well-known in the art for producing video images, such as the electronics used in producing video images in the eyepiece of a video recorder and can include, for example, power supply, timing circuitry (e.g. to assure that the data which arrives is routed to the proper position of the image generators), buffer memory or other memory devices, and/or image processor circuitry.

(Rallison, Fig. 8, 10:4-14.)

58. Claim 12 of the '559 patent further recites that the head-mounted device includes an "**accelerometer**." Rallison describes a head-worn "tracker" device "for outputting an indication of the orientation, attitude and/or position of a head-mounted display (HMD)." (Rallison, Abstract.) The tracker can use different types of sensors, such as "magnetic sensors" or "one or more inertial sensors, such as a

rate gyro and/or accelerometers." (Rallison, Abstract; *see also id.*, 5:5-17 ("inertial sensors (such as one or more accelerometers) for detecting pitch and/or roll").) For example, Figure 25C of Rallison, reproduced below, depicts two accelerometers **562**a and **562**b, of a tracker device, which "can be integrally built into the head-mounted display device":

FIG. 25C

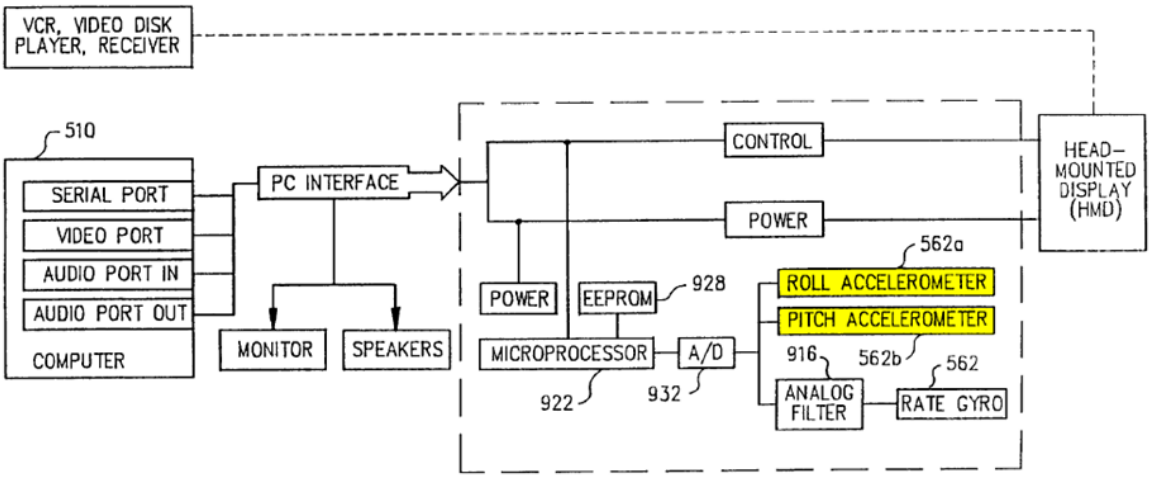

(Rallison, Fig. 25C (highlighting added); *see also id.*, 20:60-63 ("In the embodiment of FIG. **25**C, pitch and roll are sensed respectively by accelerometers **562**a, **562**b...."), 17:50-55 ("[O]ne or more trackers can be integrally built into the head-mounted display device.").)

59. I will provide more information about Rallison in my discussion of the claim limitations below.

3. Sofer (EX1008)

60. **Sofer**, International Patent App. Pub. No. WO 2003/107039 A2, is entitled "Method and Apparatus for a Multisensor Imaging and Scene Interpretation System to Aid the Visually Impaired." I am informed that Sofer qualifies as prior art because it was both filed (on June 12, 2003 and designating the United States) and published (on December 24, 2003 and in English) before the earliest priority date of the challenged claims.[4]

61. As explained in my analysis below, I point to Sofer primarily in connection with claim 1**[c]**. Claim 1**[c]** recites in part "**a detector for determining landscape characteristics of said physical playfield**." I cite Sofer to address a possible interpretation that the claim, because it recites a "head-mounted device" in the preamble, thus requires that the "**detector**" must itself be mounted on the user's head.

62. Sofer describes a system to aid a person in "negotiating spaces where one's view is partially or completely obstructed." (Sofer, p.002 ("Field Of The

---

[4] Sofer also claims priority to U.S. Provisional App. No. 60/387,901 filed June 13, 2002. (*See* Sofer, face page, field (30).) I reserve the right to demonstrate that Sofer is entitled to the earlier filing date of this provisional application should Patent Owner argue that the '559 patent is entitled to a priority date that is earlier than Sofer's utility application filing date.

Invention").) Sofer's system "provides detection and identification of fixed or moving obstacles, and can provide estimates of the relative range, speed and bearings of several simultaneous obstacles and objects." (Sofer, pp.006-007.) Sofer accomplishes this, at least in part, by using a head-mounted laser range scanner. (Sofer, p.008 ("3D imager **208** emits sequences of laser beams **204** and measures the time of arrival of the return beams **203** in order to compute the distance to the point on the surface of any object in the field of vision.").) Figures 2 and 4 of Sofer, both reproduced below, together illustrate an exemplary headset "for use with the present invention, in accordance with an exemplary embodiment of the present invention":

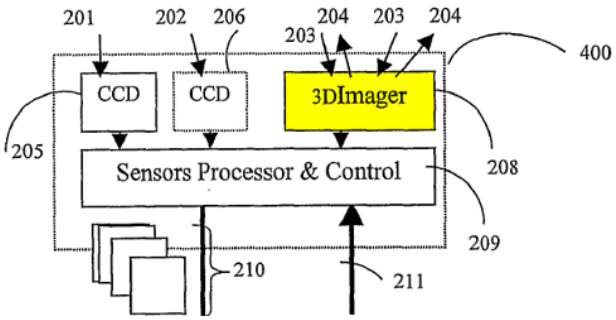

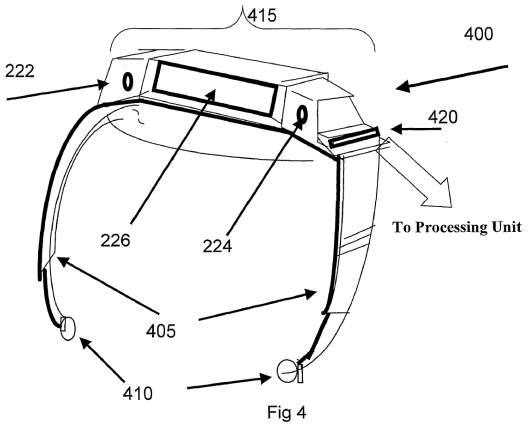

(Sofer, Fig. 2 (excerpt; highlighting added to indicate laser range scanner ("3D imager") **208**), Fig. 4; *see also id.*, p.0013.) As Sofer explains, the headset includes a "scanning range-finder" "mounted in the headset carrying compartment **415**." (Sofer, p.0013; *see also id.*, p.008 ("<u>The input unit **400**, illustrated in Fig. 4</u>

comprises two sensors, CCD sensor **205** and 3D imager **208**, and an optional third sensor shown as CCD sensor **206**.”).)

63. I will provide more information about Sofer in my discussion of the claim limitations below.

4. Ronzani (EX1009)

64. **Ronzani**, U.S. Patent App. Pub. No. 2002/0163486 A1, is entitled “Head-Mounted Display System.” I am informed that Ronzani qualifies as prior art because it was both filed (on May 16, 1997) and published (on November 7, 2002) before the earliest priority date of the challenged claims.

65. I primarily point to Ronzani in connection with my analysis of claims 1**[c]** and 1**[d]** of the ’559 patent.

66. With respect to claim 1**[c]**, I cite Ronzani in connection with showing another way in which the claimed “**detector for determining landscape characteristics of said physical playfield**” would have been obvious—i.e., as a *camera*-based range scanner. Like Sofer, Ronzani addresses a possible interpretation that the “**detector**” must be head-mounted. Similar to claim 1**[c]**, with respect to claim 1**[d]**, I cite Ronzani to address a possible interpretation that the claimed “**a device for updating the physical location of said device on said physical playfield**” must itself be head-mounted. In particular, I point to Ronzani

in connection with showing that it would have been obvious for a GPS receiver—which corresponds to the claimed "**device**"—to be head-mounted.

67. Ronzani describes various embodiments of a head-mounted display device, including head-mounted display devices that include a GPS receiver as well as a camera. The head-mounted devices have a variety of uses—including, like Jaszlics, military and "entertainment purposes." (Ronzani, ¶¶0005 ("The present invention relates generally to systems and methods for mounting display and electronic systems on the human body for numerous applications including commercial, industrial and entertainment purposes."), ¶0189 ("**FIG. 42** is a functional block diagram of a head-mounted military computer **710F**.").)

68. With respect to a head-mounted camera, Ronzani expressly discloses a head-mounted display device that includes a camera. Referring to Figure 33 reproduced below, Ronzani explains that "head-mounted computer **510**″" includes "a display pod **1100**′, which includes a display panel" and "a Charge Coupled Device (CCD) camera **555***b*":

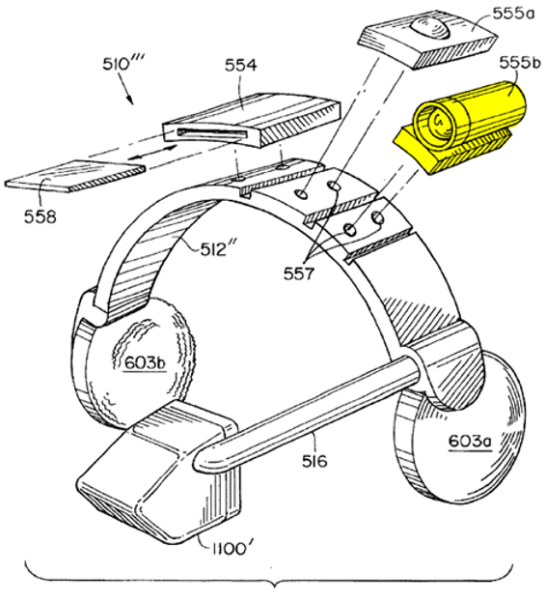

Fig. 33

(Ronzani, Fig. 33 (highlighting added); *see also id.*, ¶0154 ("**FIG. 33** is a perspective view of another preferred head-mounted computer **510**″. As illustrated, there is a head band **512**″, stereo headphones **603**A, **603**B, a display arm **516** connecting the headband **512**″ to a display pod **1100**′, which includes a display panel…. Also illustrated are expansion modules **514**, an infrared communication sensor **555** *a* and a Charge Coupled Device (CCD) camera **555***b*.").)

69. And with respect to a head-mounted GPS receiver, Figure 42 of Ronzani, shown below, is a "functional block diagram of a head-mounted military computer **710F**" that includes a Communications Module **720**F, which can "contain a GPS, which provides the soldier and command officers with the soldier's

location":

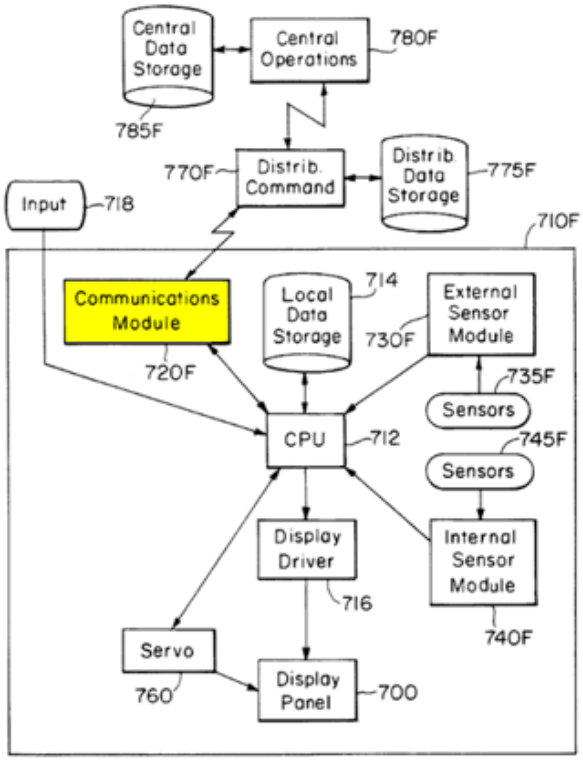

Fig. 42

(Ronzani, ¶¶0189, 0191, Fig. 42 (highlighting added).) Ronzani also describes numerous other, non-military, head-mounted devices that include GPS. (Ronzani, e.g., ¶¶0179-0181 ("head-mounted police computer" "can also include a GPS"), 0182-0183 ("head-mounted computer **710**C for use by chemical factory workers" "can also include a GPS"), 0200-0201 ("head-mounted survival computer" "includes a GPS").)

70. I will provide more information about Ronzani in my discussion of the

claim limitations below.

B. Ground 1: Claims 1, 12, 17, and 20 Are Obvious Over Jaszlics in view of Rallison, Sofer, and Ronzani

1. Independent Claim 1: "A head-mounted device comprising:" (claim 1[pre])

71. The preamble of claim 1 recites "[**a**] **head-mounted device comprising**." As explained below, assuming the preamble provides a claim limitation, Jaszlics discloses "**a head-mounted device**." For background, as discussed in the prior art summaries in **Part V.A** above, Jaszlics discloses a "combined reality" computer system in which virtual images, such as images of a virtual tank or other animated virtual entities, are combined with real-world scenes and displayed together to a user. (Jaszlics, 2:40-56 ("This invention provides a system for combining virtual images with images of the real world…. The resulting combined image is presented in an electronic or optical display."), 1:13-15 ("…systems for combining virtual images with real-world scenes."), 3:13-16 ("FIGS. **1***a* through **1***d* are examples of the real-world scene, a virtual image, the resulting masked virtual image, and combined images, respectively.") (emphasis in original), Table 7 (col. 21) (defining "combined reality" as "Apparent reality, with virtual elements projected into the image of the real world. Virtual and live elements may interact through simulation.").)

72. Jaszlics discloses "**a head-mounted device**" for displaying combined virtual images and real-world scenes to a user, such as "electronic display goggles," "virtual reality goggles or visors worn by the observer [i.e., the user of the system[5]]":

> Alternative display implementations are compatible with the method. These may include flat display panels, image projectors, or virtual reality goggles or visors worn by the observer. In cases when the observer would normally observe the external world through an optical or other instrument, the virtual images can be injected into this instrument, as described under image injection. In the case of virtual reality goggles or visors, two fields of view may be presented corresponding to what is seen by the left and right eye of the user of the system.

(Jaszlics, 9:48-57; *see also id.*, 2:10-13 ("The present invention can be used with

---

[5] Jaszlics describes a player/user of its system as an "observer." (*See* Jaszlics, 10:11-17 ("The observer **113** of the display is assumed to be the user of the invention for various purposes, such as military training, or entertainment. The observer may interact with the apparatus implementing the invention through observer actions **120** in FIG. **2**. Observer actions include the observer's interactions with virtual elements in the combined reality scene.").)

electronic display goggles to greatly extend this entertainment medium by injecting, in real time, three-dimensional virtual elements into the view of the real world."), 9:34-39 ("The display **111** may be any display system capable of displaying the combined image, such as…an electronic goggle or visor…."), Jaszlics, 10:52-57 ("The position and orientation of the observer (including the movement and attitude of the vehicle, if any, housing the observer) is sensed by observer sensors and controls **115** such as a magnetic or infrared head tracker system used in conjunction with virtual reality goggles.").)

73. As explained below, the "**head-mounted device**" as claimed is obvious over Jaszlics in view of Rallison, Sofer, and Ronzani.

74. Before turning to addressing the specific claim limitations, I note at the outset that I have assumed for purposes of my analysis that the preamble is limiting. I have therefore assumed that each of the recited components that comprises the "head-mounted device," such as "a processor," must be head-mounted as part of that device.

(a) "a processor;" (Claim 1[a])

75. A person of ordinary skill in the art would have understood and found it obvious that Jaszlics' head-mounted electronic display goggles/visor would have included "**a processor**," alone or in view of **Rallison**.

76. With respect to Jaszlics alone, I note that the claim does not require any particular type of processor or that the processor perform any particular function. A person of ordinary skill in the art would have understood and found it obvious that the electronic goggles/visor described in Jaszlics would include some form of "**processor**," such as an integrated display controller or image signal processing circuitry to provide images to the display of the head-mounted device. (*See, e.g.*, EX1014 (IEEE dictionary), p.003 (entry for "display controller" referring to entry "display generator," which describes "[a] processing unit that will produce the corresponding image on the display device when presented with a display instruction.").)

77. A "**head-mounted device** [comprising] **a processor**" would have also been obvious in view of **Rallison**. Rallison, entitled "Head-Mounted Personal Visual Display Apparatus with Image Generator and Holder," expressly describes a head-mounted display that includes "image processor circuitry." Referring to Figure 8 (shown below), Rallison explains that "image processor circuitry" is contained within "main section **12**" of the head-mounted device:

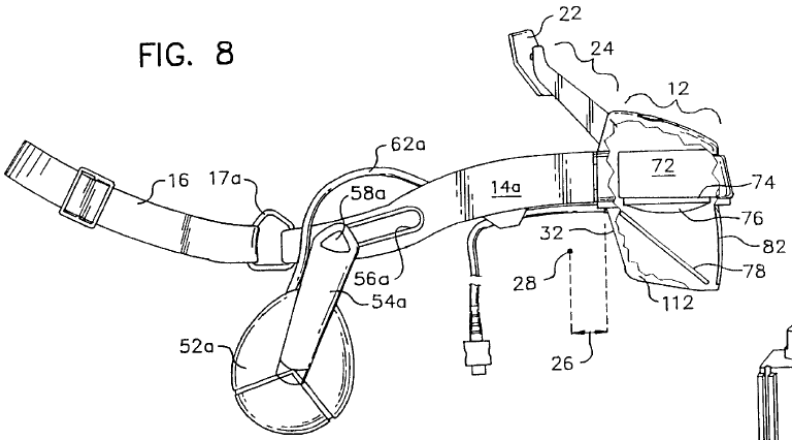

> In one embodiment, the electronics used in generating the image **72** are substantially all contained in the upper portion of the main section **12** of the apparatus as depicted in FIG. 8. The electronics used for this purpose can be those generally well-known in the art for producing video images, such as the electronics used in producing video images in the eyepiece of a video recorder and can include, for example, power supply, timing circuitry (e.g. to assure that the data which arrives is routed to the proper position of the image generators), buffer memory or other memory devices, and/or image processor circuitry.

(Rallison, Fig. 8, 10:4-14.)

78. **Rationale and Motivation to Combine (Jaszlics and Rallison)**. It would have been obvious to a person of ordinary skill in the art to combine Rallison's teachings regarding a head-mounted device that includes a processor with Jaszlics. The combination would have involved the straightforward incorporation of a processor into the electronic goggles/visor disclosed in Jaszlics and would have

predictably resulted in a head-mounted device in Jaszlics' system that included a processor. The combination therefore discloses and renders obvious a "**head-mounted device** [comprising] **a processor**" as claimed.

79. Jaszlics and Rallison are both analogous references to the '559 patent. Like the '559 patent, both Jaszlics and Rallison are in the field of location-based computing and gaming, as well as virtual and augmented reality computing. ('559, 1:20 ("This invention relates to location-based game systems."), 1:65-66 ("An Augmented Realty [sic] (AR) game system may also be provided…"); Jaszlics, e.g., 1:13-15 ("The present invention relates generally to the field of virtual reality simulation, and more particularly to systems for combining virtual images with real-world scenes."), 10:63-67 (describing "individuals moving in the real world, or housed in a vehicle"); Rallison, e.g., 24:7-11 ("[C]onsider a situation in which a user is employing an HMD/tracker in connection with game software which permits the user to move his or her head so as to view different portions of a virtual environment.").) Moreover, both Jaszlics and Rallison would have been reasonably pertinent to problems facing the '559 patent inventor, including designs for head-mounted devices to be used in augmented reality computing.

80. A person of ordinary skill in the art would have been motivated to make the combination. As discussed, a person of ordinary skill in the art would have

understood and found it obvious for Jaszlics' electronic goggles/visor to include a processor. Rallison provides confirmation, explaining that "[t]he electronics used in generating the image" in the head-mounted device "can be those generally well-known in the art for producing video images" and can include "image processor circuitry." (Rallison, 10:4-14.) The combination would have therefore involved, at most, the use of a known technique to include a processor in a head-mounted device so as to improve a similar device (Jaszlics' head-mounted device) in the same way—i.e., an integrated processor for controlling the display. Moreover, because the details of a head-mounted device are not a focus of Jaszlics, a person of ordinary skill in the art, seeking to implement and adapt Jaszlics, would have naturally turned to Rallison for its additional disclosures when considering a suitable head-mounted display for Jaszlics' system.

81. I further note that Ronzani, discussed in connection with claim 1**[c]** & 1**[d]** and claim 12 also discloses various embodiments of a head-mounted display device that includes a processor, further confirming the obviousness of "**a head-mounted device** [comprising] **a processor**." Ronzani explains that "[a]s described in the various distinct embodiments herein, <u>the central programming unit</u>, the memory and various parts <u>can be included…with the headpiece</u>." (Ronzani, ¶0142.) For example, referring to Figure 33, reproduced below, Ronzani states that "The

CPU and video drive circuitry are fabricated as an integral part of the head band **512″**":

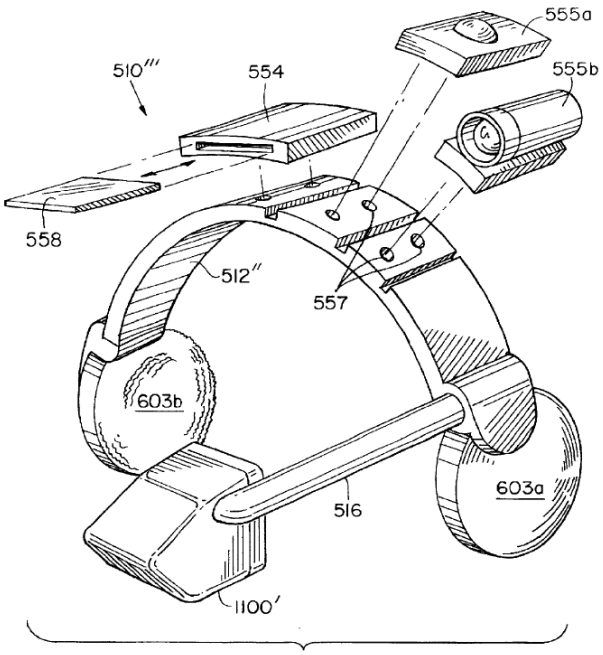

Fig. 33

(Ronzani, Fig. 33; *see also id.*, ¶0154 ("**FIG. 33** is a perspective view of another preferred head-mounted computer **510″**. As illustrated, there is a head band **512″**, stereo headphones **603**A, **603**B, a display arm **516** connecting the headband **512″** to a display pod **1100′**, which includes a display panel. <u>The CPU and video drive circuitry are fabricated as an integral part of the head band **512″**</u>."); *see generally id.*, e.g., ¶¶0148, 0150, 0155, 0162, 0165-0166, 0168-0169, 0172, 0192-0193 (describing "CPU" of head-mounted devices).) As noted, I discuss Ronzani more in connection with claim 1**[c]** & 1**[d]**, and claim 12 below, and I incorporate that

analysis here, including the motivation to combine and expectation of success.

82. A person of ordinary skill in the art would have had a reasonable expectation that the combination of Jaszlics and Rallison (alone or in further view of Ronzani) would have been successful. For example, Rallison treats the incorporation of a "processor" into a head-mounted device as an afterthought, explaining "[t]he electronics used for this purpose can be those generally well-known in the art for producing video images." (Rallison, 10:4-14.) Similarly, Ronzani, with its passing references to integrating a processor into a head-mounted device, treats it as a routine design decision; not something that poses a technically challenging obstacle that would require undue experimentation.

(b) "a display that displays 3-D video game indicia with respect to a physical playfield based on video game logic associated with a video game;" (Claim 1[b])

83. Jaszlics' head-mounted electronic display goggles/visor ("**head-mounted device**") plainly comprise "**a display**." (Jaszlics, e.g., 9:48-57 ("Alternative <u>display implementations</u> are compatible with the method. These may include flat display panels, image projectors, or <u>virtual reality goggles or visors worn by the observer</u>."), 2:10-13 ("electronic display goggles"), 9:34-39 ("The display **111** may be any <u>display system capable of displaying the combined image</u>, such as…<u>an electronic goggle or visor</u>….").)

84. Jaszlics also teaches that the display of the head-mounted electronic display goggles/visor "**displays 3-D video game indicia with respect to a physical playfield**." I note that the '559 patent describes "**physical playfield**" as broadly including "the physical world, a physical environment, or a defined physical playfield." ('559, 1:57-61 ("A handheld location-based game system is provided in which a user's physical position on <u>a physical playfield (e.g., the physical world, a physical environment, or a defined physical playfield)</u> correlates to a video game character's location in a virtual playfield.").)

85. Jaszlics teaches that the electronic display goggles/visor are used to display, for example, virtual tanks and other virtual objects ("**3-D video game indicia**") overlaid within a physical landscape surrounding the user ("**physical playfield**"). Figure 1 of Jaszlics illustrates, with Fig. **1**d in particular showing how a virtual tank (exemplary "**3-D video game indicia**") is displayed within a real world scene ("**displayed**…**with respect to a physical playfield**"):

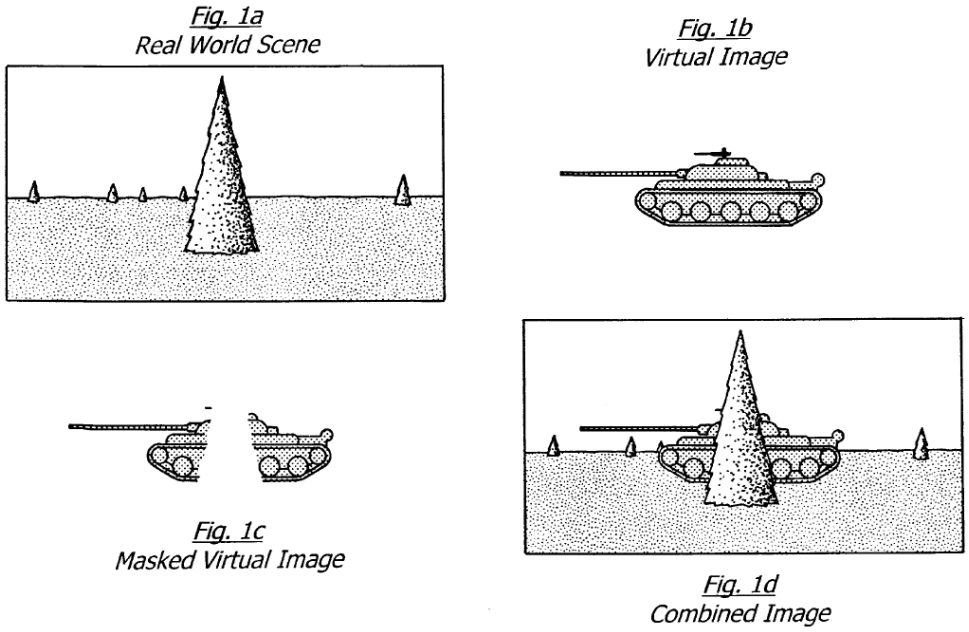

Fig. 1

(Jaszlics, Fig. 1; *see also id.*, 4:19-23 ("The masked virtual image and the image of the real world are then combined in such a manner that in the resulting combined image (FIG. **1***d*) the virtual object will appear to exist and move in the real world at its virtual position."), 8:53-56 ("In this step **110** of FIG. 2, the virtual images constructed in the virtual image generation step **109** are combined with the real-world image **114** originating from the video camera **100**."), 23:56-59 (claim 4, reciting "wherein said display means comprises an electronically-controlled visor and wherein the field of view comprises the field of view visible through said visor"), 25:3-6 (claim 15, reciting "wherein said combined image is displayed through an electronically-controlled visor and wherein the field of view comprises the field of

view visible through said visor”).)

86. As another example, Figure 14 of Jaszlics, below, illustrates virtual tanks **162** (“**3-D video game indicia**”) overlaid on hills **160** of the user’s physical environment (“**physical playfield**”):

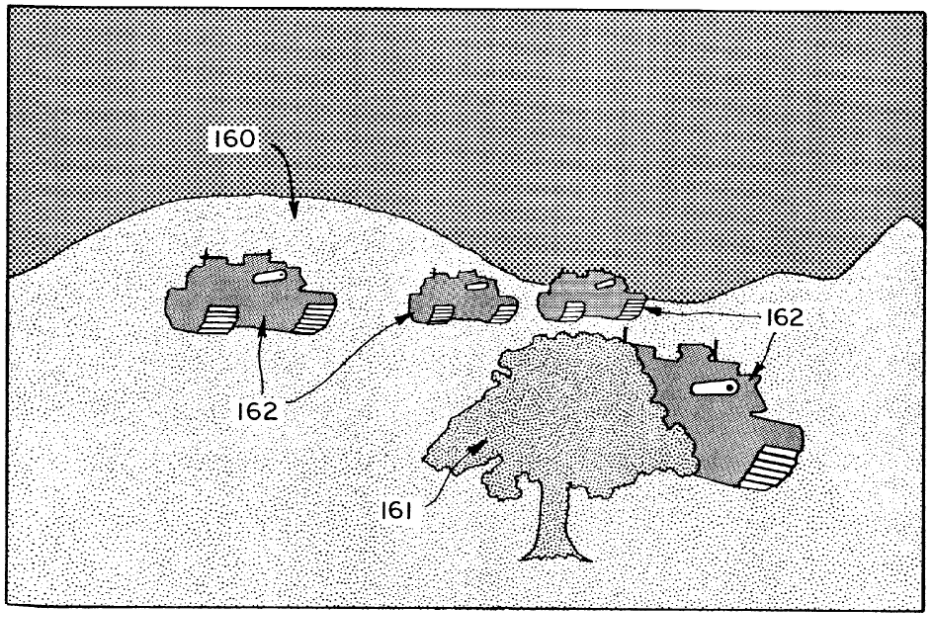

Fig. 14

(Jaszlics, Fig. 14; *see also id.*, 9:60-62 (“FIG. **14** shows a combined view in the infrared, as it may show up in the thermal viewer of a modern battle tank or infantry fighting vehicle.”), 3:49-51 (“FIG. **14** is an example of a combined view of virtual tanks and the real world in the infrared as seen through the thermal viewer of a tank or infantry fighting vehicle.”); *see also* EX1011 (Jaszlics Provisional), 00152, Fig. 14 (identifying **160** as “Hills” and **162** as “Virtual Entities”).)

87. As a third illustration, referring to Figure 15 (below), Jaszlics explains how the overlaid "**3-D video game indicia**" can be a variety of virtual elements, such as a path marker **172**, a unit boundary **173**, a navigational marker **174**, and a phase line **175**, which are overlaid on terrain **170**:

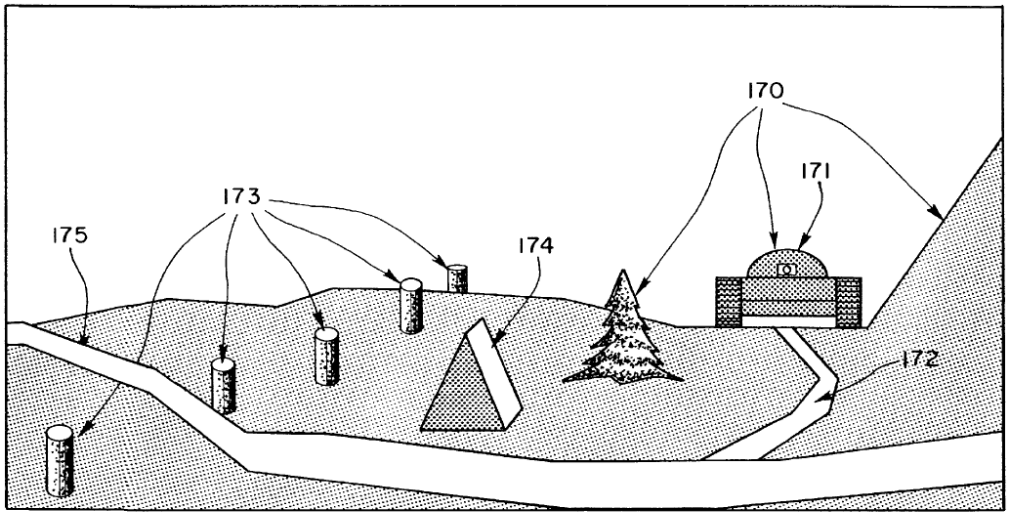

Fig. 15

(Jaszlics, Fig. 15; *see also id.*, 9:64-10:9 ("The virtual entities generated by a virtual entity simulation do not necessarily represent a real-world object. For example, they may represent fictional characters or entities, or views of conceptual objects. An example of conceptual virtual entities is shown in FIG. **15**. In FIG. **15**, the real-world objects **170** include the terrain, a tree, and a battle tank, in which the observer or observers **171** of a combined reality view presented to them are located. The conceptual virtual entities in the figure are conceptual objects: a path marker **172**, a

unit boundary **173**, a navigational marker **174**, and a phase line **175**. The present system positions the conceptual virtual entities in the display in such a manner that they appear to be present in the landscape visible to the observer(s).”).)

88. Turning more specifically to the phrase “**3-D video game indicia**,” Jaszlics teaches that the virtual entities, such as virtual tanks and other characters, entities or conceptual objects, are both “**3-D**” and “**video game**” indicia. With respect to “**3-D**,” the figures from Jaszlics shown above include 3-D virtual elements, most clearly shown by unit boundary **173** and navigational marker **174** in Figure 15. More generally, Jaszlics explains that the virtual entities can be generated and rendered using the “Virtual Reality Modeling Language” (“VRML”) or “any rendering system capable of rendering three-dimensional objects, or two-dimensional projections of three-dimensional objects.” (Jaszlics, e.g., 8:7-16 (“Virtual entities may be simulated, by the animation and control techniques available through the Virtual Reality Modeling Language (VRML). An example of this approach is shown in the listing of Appendix B, in which three battle tanks are animated.”), 6:34-41.) VRML was a standard language for modeling three-dimensional interactive objects. (*See, e.g.*, EX1012 (Microsoft Computer Dictionary (5th ed. 2002)), p.009 (entry for “VRML” stating “Acronym for **V**irtual **R**eality **M**odeling **L**anguage. A scene description language for creating 3-D interactive Web

graphics similar to those found in some video games, allowing the user to 'move around' within a graphic image and interact with objects.").) Jaszlics therefore discloses and renders obvious "**3-D**" indicia.

89. With respect to "**3-D video game indicia**," Jaszlics makes clear that its combined reality system is for "video games." For starters, Jaszlics specifically describes using its system for virtual war games, and related game play, such as engaging in a virtual tank battle. (Jaszlics, e.g., 10:15-25, 11:4-6, 15:15-30.) This is just like the '559 patent, which similarly states that "an AR game system may be utilized in the military training of soldiers" and specifically recognizes this sort of military simulation as "game play." ('559, 5:24-25; *see also id.*, 5:25-28 ("To accommodate such an application the landscape of a pre-determined area (e.g., a particular square area of a military based [sic]) may be scanned at a point before a game is played."), 15:40-42 ("For example, if the military desires an AR system for special operations warfare then a particular field may be utilized for game play.").)

90. More specifically, Jaszlics explains that "[t]he present invention can be used in these war games to generate virtual tanks that appear to move about the terrain. This can completely eliminate the need, for example, for live tanks representing the enemy force in a war gaming exercise. Virtual vehicles and real vehicles can appear in the same scene." (Jaszlics, 1:53-58.) Jaszlics describes

military simulation game play that includes a player/user (which Jaszlics refers to as an "observer") engaging a virtual combat vehicle and taking damage or getting "killed":

> Observer actions include the observer's interactions with virtual elements in the combined reality scene. An example of such direct interaction is the engagement of a virtual opponent from a combat vehicle, such as a battle tank. In this case, the observer (the battle tank's gunner or commander) would observe and track the virtual opponent embedded in the real-world scene through the tank's actual gun sight, and engage it by depressing the trigger of the tank's main gun. This virtual-live interaction will take place by the observer's actions being captured through the observer's sensors and controls **115** in FIG. **2**.

(Jaszlics, 10:15-25.)

> For example, if one of the virtual tanks represented in this simulation engage the avatar of the observer's tank, the resulting damage information will activate damage displays, or a "killed" indicator in the observer's sensors and controls suite.

(Jaszlics, 11:59-63; *see also id.*, 11:4-6 ("Observer's sensor and controls normally include displays or signals resulting from feedback from the virtual simulation, such as virtual battle damage."), 15:53-56 ("The virtual entities implemented by the virtual simulation and control software are capable of engaging the avatar of the

observer's vehicle, depending on the scenario loaded in."); 15:25-30 ("The Zoom Control list box, the AutoTrack check box, and the Fire button in the control frame emulate some of the functions of the controls available to the gunner of a main battle tank, or to the gunner in a tank simulator, for engaging the virtual T-80s operated by the virtual simulation."), 10:39-44 ("Observer actions in the virtual-live interoperations include magnification (zoom) control of a simulated battle tank gun sight, the tracking of a specific virtual tank, and engagement of a virtual tank being tracked through the simulated gun sight. They also include scenario selection, scenario start, stop, and re-start.").) Jaszlics' disclosure of using its combined reality system for simulated war games therefore discloses "**3-D video game indicia**."

91. Putting aside its military-specific gaming applications, Jaszlics expressly teaches that its system can be used as "an interactive, recreational device," and is broadly applicable to gaming generally, explaining that, for example, "[a]nother possible field of use is in games, such as laser tag, so that virtual players, objects, and special effects can be combined with real players and real objects in the playing field." (Jaszlics, 1:64-67; *see also id.*, 18:48-55 ("Most of the examples discussed in the disclosure are in the area of military training, enabling individuals or combat vehicle crews to engage simulated opponents in a real-world environment. The invention is not limited to such applications; it can be applied with equal

efficacy…as an interactive, recreational device."), 15:21-24 ("Other scenarios not related to tanks, or military training, can be selected by a user of the reference apparatus after minor modification of the VRML data, and the labels of the scenario control list.").) Jaszlics therefore clearly discloses and renders obvious "**3-D video game indicia**." Jaszlics therefore teaches a head-mounted device comprising a display "**that displays 3-D video game indicia with respect to a physical playfield**" as claimed.

92. Turning to the last portion of claim 1**[b]**, Jaszlics also discloses, and a person of ordinary skill in the art would have understood and found it obvious, that Jaszlics' virtual entities ("**3-D video game indicia**") would be operable to be provided to the head-mounted display with respect to a physical playfield "**based on video game logic associated with a video game**"—i.e., the logic associated with Jaszlics' "virtual simulation and control software" and virtual simulations executed by the software.

93. In particular, Jaszlics describes its system as using a conventional computing system, such as "a personal workstation running two 266 MHz Pentium II processors," to execute software including "virtual simulation and control software" and virtual simulations executed by the software, such as various "scenarios" providing game simulations—military-based or otherwise. (Jaszlics,

14:13-18 ("Virtual masking object generation is presently implemented by virtual masking object (VMO) generation software running in a virtual simulation computer **210** (e.g., a personal workstation running two 266 MHz Pentium II processors)."), 14:66-15:1 ("Virtual entity simulation is implemented in the virtual simulation computer through the virtual simulation and control software."), 15:53-56 ("The virtual entities implemented by the virtual simulation and control software are capable of engaging the avatar of the observer's vehicle, depending on the scenario loaded in."), 17:11-12 (describing "scenario" "executed by the virtual simulation and control software"), 15:21-24 ("Other scenarios not related to tanks, or military training, can be selected by a user of the reference apparatus after minor modification of the VRML data, and the labels of the scenario control list.").) The logic associated with Jaszlics' "virtual simulation and control software" and virtual simulations executed by the software—i.e., logic associated with one or more video games—discloses the claimed "**video game logic associated with a video game**."

(c) "a detector for determining landscape characteristics of said physical playfield, wherein said video game logic utilizes said landscape characteristics in providing said video game; and" (Claim 1[c])

94. As explained below, this limitation is disclosed by and obvious over Jaszlics alone or in view of **Sofer** in the form of a head-mounted range scanner.

95. I note that dependent claim 12 further recites that the "**detector**" "**includes a camera**." I therefore also provide an additional, more specific mapping based on Jaszlics alone or in combination with **Ronzani**, where the "**detector**" is specifically a *camera*-based range scanner comprising a head-mounted camera.

(1) First "detector" mapping, based on Jaszlics alone or in view of Sofer: "detector" is a range scanner

96. Jaszlics discloses and renders obvious "**a detector for determining landscape characteristics of said physical playfield**" in the form of a range scanner, such as a laser range scanner or other technology for scanning a real-world outdoor scene to determine characteristics of the scene, such as "the shape and distance of real-world objects within a field of regard of interest to the observer using the apparatus." (Jaszlics, 2:41-46; *see also id.*, 12:19-13:44 (detailing laser scanner functionality, including transmitter and receiver sections for emitting and detecting, respectively, laser pulses).)

97. For example, Figure 2 of Jaszlics depicts a Range Scanning component **101** within Jaszlics' system:

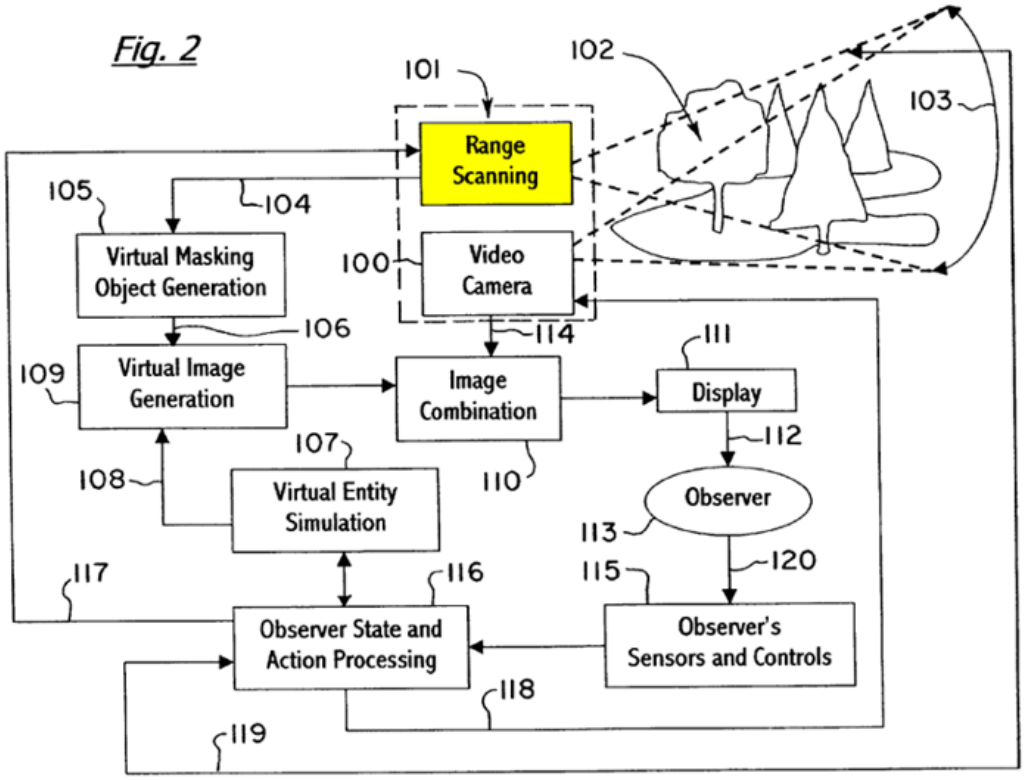

(Jaszlics, Fig. 2 (highlighting added); *see also id.*, 4:35-37 ("[A] range scanner **101** determines the distance of the entities present in a real-world scene **102** within small ranging sectors.").) Jaszlics explains that "[r]ange scanning may be performed by a laser range scanner (as in the reference apparatus shown in FIGS. 16-22) or by other means that can determine the distance of objects within the angular space of ranging sector." (Jaszlics, 4:43-46; *see also id.*, Figs. 16 (illustrating Laser Scanner **203**), 17 (illustrating transmitter section of laser scanner), 18 (illustrating receiver section of laser scanner), 4:60-5:6 (describing other methods for landscape detection, including three-dimensional radar scanning, acoustical ranging, active flash ranging methods,

and passive ranging methods (e.g., stereographic or parallax comparison of real-world scene elements).)

98. The written description of the '559 patent provides further confirmation that Jaszlics' range scanner is "**a detector of said head-mounted device operable to determine landscape characteristics of said physical playfield**" as claimed. Jaszlics' description of a range scanner that determines the "shape and distance of real-world objects" (Jaszlics, 2:41-46) is remarkably similar to the '559 patent's own description of a "landscape detector" that "may measure the distance to objects and the shape of the object." The '559 patent states:

> For example, landscape detector **451** may measure the distance to objects and the shape of the object. This may be done for example by sound/light sensing (e.g., reflective sensing such as sound/light echoing or color sensing with respect to light source) or any type of object/distance sensing (e.g., infrared). A camera may be utilized to take a picture/video of the environment. Video processing features may be utilized to determine landscape as, for example, a user moves around the landscape.

('559, 15:18-27.)

99. Jaszlics also discloses "**said video game logic utilizes said landscape characteristics in providing said video game**." Jaszlics' system uses the distance

and shape information provided by range scanning data ("**said landscape characteristics**") to generate "virtual masking objects" that it uses to present a more realistic virtual simulation. (Jaszlics, 2:41-46 ("Virtual masking objects, which are simplified computer models of real-world objects, are derived from the range data."), 4:50-55 ("Range scanning is an existing technology that provides range data necessary for virtual masking object generation.").) Figure 9 of Jaszlics, below, illustrates how the range scanning data is used to generate virtual masking objects:

Fig. 9

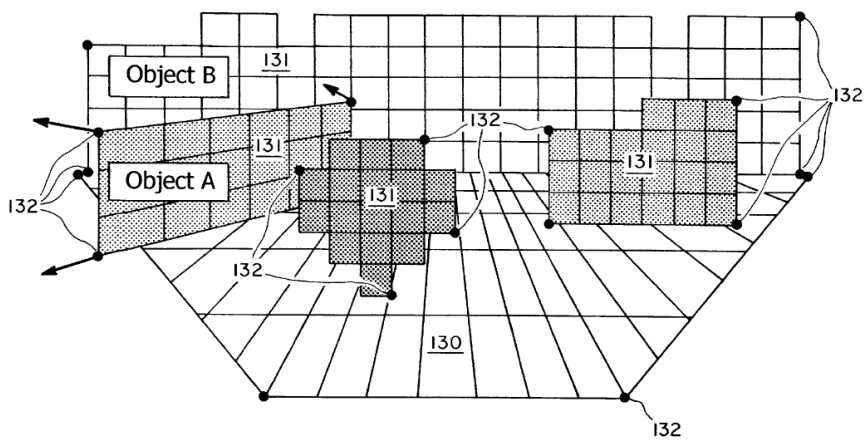

(Jaszlics, Fig. 9.) Referring to Figure 9, Jaszlics explains that it "shows several virtual masking objects, including the apparent terrain **130** observed by range scanning, and other virtual masking objects **131**, which include Object A located near to the observation point, and Object B located at the extreme range of range scanning." (Jaszlics, 7:29-34.) Jaszlics uses these virtual masking objects to present

a more realistic virtual simulation, by for example, using them to generate a combined reality image where a portion of a virtual object, such as a tank, is masked out such that it appears to be partially concealed behind a real-world object, such as a tree. Figure 1 of Jaszlics illustrates:

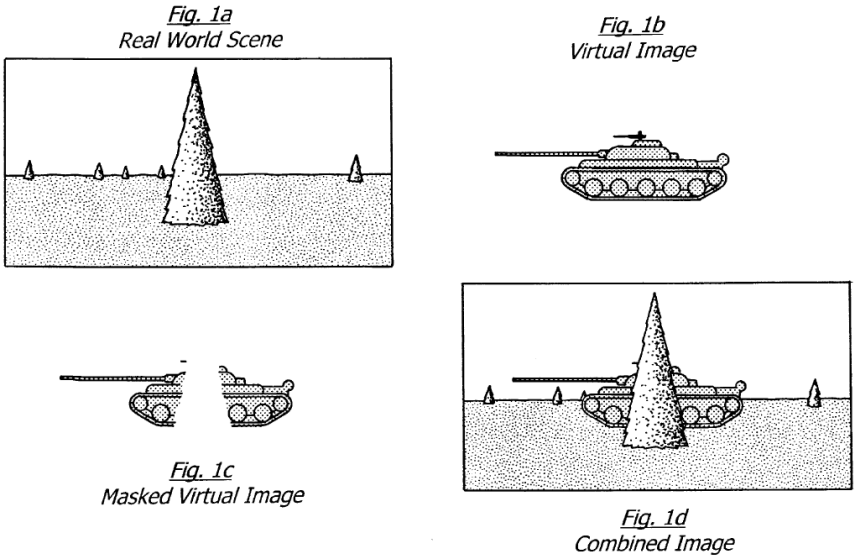

Fig. 1

(Jaszlics, Fig. 1; *see also id.*, 4:13-27 ("The present system combines the image of a real-world scene (FIG. 1a) with a virtual image (FIG. 1b). The invention provides a method and the description of a reference apparatus and alternative implementations, to sense and remove elements of a virtual image, thereby generating a masked virtual image (FIG. 1c). The masked virtual image and the image of the real world are then combined in such a manner that in the resulting combined image (FIG. 1d) the virtual object will appear to exist and move in the real world at its virtual position.").)

100. Figure 20 of Jaszlics further illustrates how the detected ranging data—Range Data **240**—is input into and processed by Virtual Simulation Computer **210**, which implements "[v]irtual entity simulation" "through the virtual simulation and control software" ("**said video game logic**"):

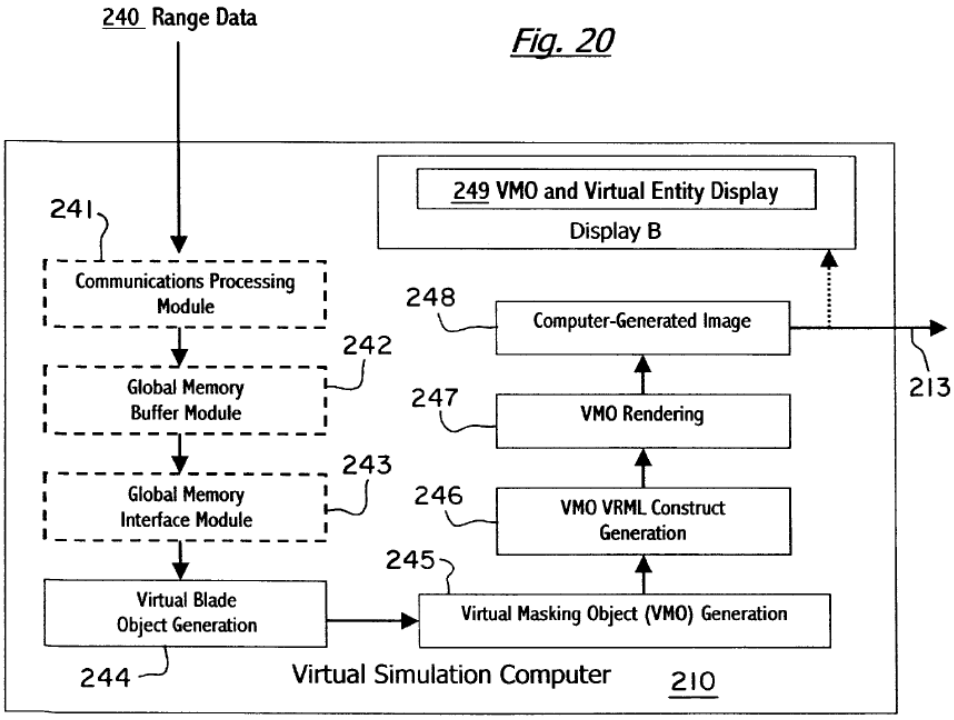

(Jaszlics, Fig. 20; *see also id.*, 3:64-65 ("FIG. 20 is a simplified block diagram of the virtual masking object (VMO) generation software."), 14:32-52 (describing input and processing of ranging data), 14:66-15:1 ("Virtual entity simulation is implemented in the virtual simulation computer through the virtual simulation and control software.").)

101. Jaszlics therefore teaches that ranging data corresponding to the

distances and shapes of real-world objects in the user's physical environment ("**landscape characteristics of said physical playfield**") is utilized by Jaszlics' virtual simulation and control software ("**said video game logic**") in providing a virtual simulation, such as military or non-military games ("**in providing said video game**").

102. I will turn now to address how Jaszlics, alone or in view of **Sofer**, discloses and renders obvious a "**detector**" that is head-mounted as a part of the recited "head-mounted device."

103. It would have been obvious to a person of ordinary skill in the art for Jaszlics' range scanner itself to be head-mounted as a part of a head-mounted device. This is because Jaszlics itself describes a user wearing electronic display goggles or visor and further discloses that the user can be a mobile individual—not necessarily an individual located in a vehicle. (Jaszlics, e.g., 10:63-67 ("For moving observers, who may be individuals moving in the real world, or housed in a vehicle…"), 5:13-18 ("dynamic scenes with a moving observation point and mobile elements within the real-world scene"), 11:16-18 ("State vectors (three dimensional position, angles, velocity, and angular velocities) are generated for the observer, and for the observer's vehicle (if any)."), 1:64-67 (describing laser tag).) A person of ordinary skill in the art would have understood that, in order to continue to present a usable

and realistic simulation, updated ranging data would need to be collected from the user's vantage point as the user moved around their environment.

104. And in fact, Jaszlics discloses that the range scanner is used to periodically scan the user's field of view, including scanning more often for "dynamic scenes with a moving observation point and mobile elements within the real-world scene." (Jaszlics, e.g., 24:38-40 ("…said range scanner periodically scans an array of ranging sectors in the field of view.") (claim 10), 5:7-18 ("The frequency of range data updates imposed on the range scanner depends on the type of real-world scene considered for specific implementations of the invention….For dynamic scenes with a moving observation point and mobile elements within the real-world scene, the system will normally require considerably higher range scanning pulse rates, such as 30 KHz, and a range frame update rate for the field of regard in the order of 1 Hz or higher.").) In addition, Jaszlics further suggests that the range scanner is mounted on the user's head, explaining that "[c]hanges in the head position of the observer in some implementations of the invention will control the optical axes of the video camera and range scanner, to ensure that scanning and real-world scene acquisition coincides with the observer's current field of view." (Jaszlics, 11:43-47.) The close coupling of a user's field of view and the range scanner is shown in Figure 2 of Jaszlics, which illustrates a range scanner (**101**)

placed in proximity to the user's vantage point captured by a video camera (**100**), so that "[t]he field of regard **103** of the camera **100** coincides approximately with the field of regard of the range scanning **101**":

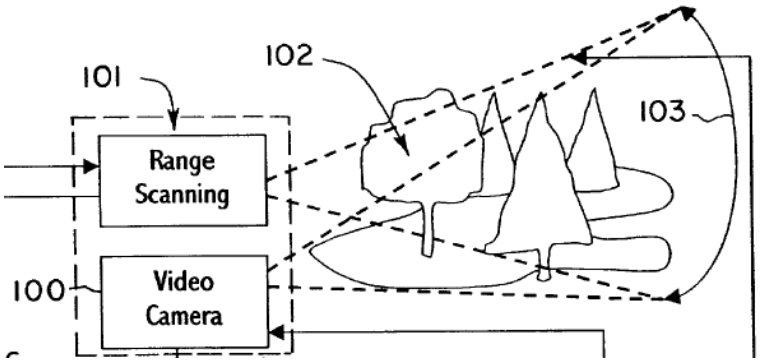

(Jaszlics, Fig. 2 (excerpt), 8:61-63.) Accordingly, Jaszlics alone suggests, and a person of ordinary skill would have found it obvious, that the range scanner would have been head-mounted as a part of an electronic goggles/visor head-mounted device.

105. To the extent there is any question whether it would have been obvious for a range scanner to be head-mounted, this is expressly disclosed by **Sofer**. Sofer, entitled "Method and Apparatus for a Multisensor Imaging and Scene Interpretation System to Aid the Visually Impaired," describes a system to aid a person in "negotiating spaces where one's view is partially or completely obstructed." (Sofer, p.002 ("Field Of The Invention").) Sofer's system "provides detection and identification of fixed or moving obstacles, and can provide estimates of the relative

range, speed and bearings of several simultaneous obstacles and objects." (Sofer, pp.006-007.) Sofer accomplishes this, at least in part, by using a head-mounted laser range scanner. (Sofer, p.008 ("3D imager **208** emits sequences of laser beams **204** and measures the time of arrival of the return beams **203** in order to compute the distance to the point on the surface of any object in the field of vision.").) Figures 2 and 4 of Sofer, both reproduced below, together illustrate an exemplary headset "for use with the present invention, in accordance with an exemplary embodiment of the present invention":

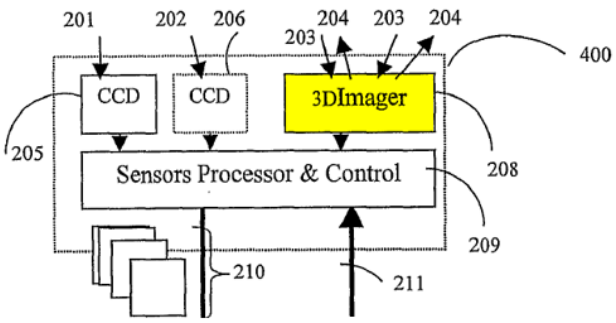

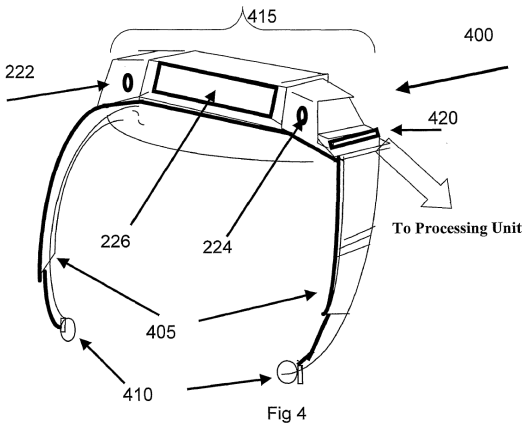

(Sofer, Fig. 2 (excerpt; highlighting added to indicate laser range scanner ("3D imager") **208**), Fig. 4; *see also id.*, p.0013.) As Sofer explains, the headset includes a "scanning range-finder" "mounted in the headset carrying compartment **415**." (Sofer, p.0013; *see also id.*, p.008 ("<u>The input unit **400**, illustrated in Fig. 4 comprises</u> two sensors, CCD sensor **205** and <u>3D imager</u> **208**, and an optional third

sensor shown as CCD sensor **206**.”).)

106. **Rationale and Motivation to Combine (Jaszlics-Rallison with Sofer)**. It would have been obvious to combine Sofer’s teachings regarding a head-mounted range scanner with Jaszlics’ combined reality computing system (and under the proposed combination with Rallison). The combination involved the incorporation of Sofer’s range scanning techniques, with no change in function, into Jaszlics’ system utilizing a head-mounted device. This combination would have predictably resulted in a head-mounted range scanner used for the user’s electronic goggles/visor—thereby disclosing a “**head-mounted device**… **comprising**…**a detector**” that is itself mounted on the user’s head.

107. Sofer is an analogous reference to the ’559 patent. Like the ’559 patent, Sofer relates to augmenting a user’s view with the real world; in Sofer’s case by scanning a user’s physical surroundings in order to provide information to the user regarding obstacles and objects in the user’s environment. Sofer also would have been reasonably pertinent to problems facing the ’559 patent inventor, including techniques for helping a user avoid obstacles in their real-world environment during a virtual or augmented reality simulation. (’559, e.g., 1:30-33 (“If a user begins to physically move in his/her physical environment without being able to see his/her physical environment then the user may trip, or bump into, a physical object (e.g., a

rock or chair).”), 19:54-57 (“For example, a user may trip over a rock if that user is in an ‘invincible mode’ and runs through a virtual character and that character covers the rock by being non-transparent.”).)

108. A person of ordinary skill in the art would have been motivated to combine. As discussed above, a person of ordinary skill in the art would have appreciated that it would be desirable for Jaszlics’ range scanner to be placed in close proximity to the user’s vantage point, and in fact Jaszlics teaches such an arrangement. (Jaszlics, 11:43-47, Fig. 2, 8:61-63.) As also discussed, Jaszlics further describes how its system can be used by an individual mobile user. (Jaszlics, 10:63-67, 5:13-18, 11:16-18, 1:64-67.) Therefore, a person of ordinary skill in the art, seeking to implement or adapt Jaszlics’ teachings, would have been motivated to investigate potential ways in which range scanning could be implemented for a mobile individual—and would have recognized that a head-mounted range scanner would have been obvious to try. A person of ordinary skill in the art would have therefore looked to a reference like Sofer for its disclosures confirming and describing an implementation of a lightweight, head-mounted range scanning device for a mobile individual.

109. A person of ordinary skill in the art would have had a reasonable expectation of success. The combination would have simply involved where to

place a known, available range scanner—in this case, mounting the scanner on the user's head.

(2) Second "detector" mapping, based on Jaszlics alone or in view of Ronzani: "detector" is a camera

110. Turning to the second mapping, where the claimed "**detector**" corresponds specifically to a camera, as noted above Jaszlics explains that range scanning can be performed by various means "that can determine the distance of objects within the angular space of ranging sector." (Jaszlics, 4:43-46.) In particular, Jaszlics discloses that range scanning can be performed with a camera. (Jaszlics, e.g., 4:60-5:6 (describing "active flash ranging methods" and "passive ranging methods (e.g., stereographic or parallax comparison of real-world scene elements)"), 18:20-31.)

111. For example, Figure 24 of Jaszlics, reproduced below, "is a diagram illustrating passive optical ranging using two <u>cameras</u> to determine the range of an object":

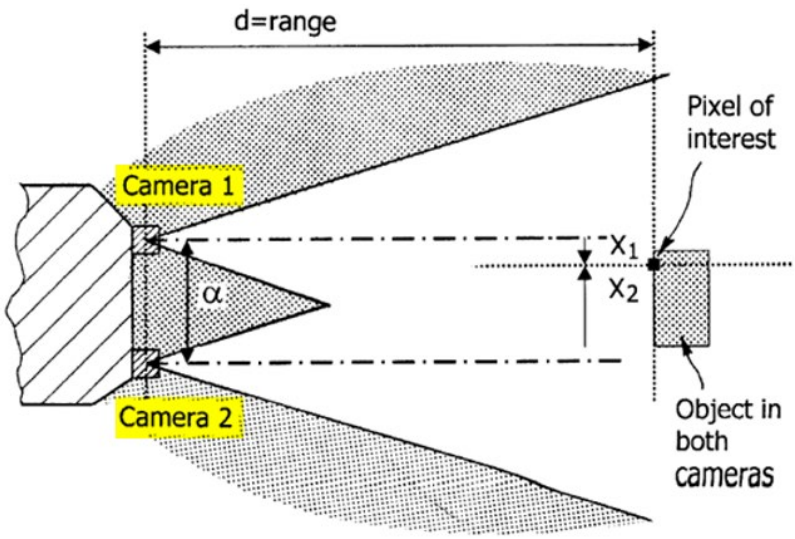

Fig. 24

(Jaszlics, Fig. 24 (highlighting added), 4:6-7.) Jaszlics explains that "[p]assive ranging methods are based on parallax measurements of ranging sectors (pixels) in coaxial CCD matrix cameras with parallel optical axes separated by a known baseline (FIG. 24)." (Jaszlics, 18:33-46.)

112. As explained above in my analysis under the first "detector" mapping, Jaszlics discloses that a range scanner is used for "**determining landscape characteristics of said physical playfield**," such as the distance and size of objects in the user's physical surroundings. Therefore, a *camera*-based range scanner likewise discloses "**a detector for determining landscape characteristics of said physical playfield**." And because, as explained above, Jaszlics uses the data collected using a range scanner in providing a simulation (such as to generate virtual

masking objects), the use of a camera-based range scanner in providing a simulation also discloses "**said video game logic utilizes said landscape characteristics in providing said video game**."

113. I will turn now to address how Jaszlics, alone or in view of **Ronzani**, discloses and renders obvious a "**detector**"—in this case, a camera—that is head-mounted as a part of the recited "head-mounted device."

114. For starters, for the reasons discussed above—i.e., moving user vantage point and need for ranging data that coincides with the user's field of view—it would have been obvious to a person of ordinary skill in the art for the camera-based range scanner itself to be head-mounted. (*See* Jaszlics, e.g., 11:43-47, 8:61-63, 10:63-67, 5:7-18, 11:16-18, 23:38-40, Fig. 2.) Accordingly, Jaszlics alone suggests, and a person of ordinary skill would have found it obvious, that a camera-based range scanner would have been head-mounted as a part of an electronic goggles/visor head-mounted device.

115. To the extent there is any question whether it would have been obvious for a camera to be head-mounted, this is expressly disclosed by **Ronzani**. Ronzani, entitled "Head-Mounted Display System," describes various embodiments of a head-mounted display device that can have a variety of uses—including, like Jaszlics, military and "entertainment purposes." (Ronzani, ¶0005 ("The present

invention relates generally to systems and methods for mounting display and electronic systems on the human body for numerous applications including commercial, industrial and entertainment purposes."), ¶0189 ("**FIG. 42** is a functional block diagram of a head-mounted military computer **710F**.").) Ronzani expressly discloses a head-mounted display device that includes a camera. Referring to Figure 33 reproduced below, Ronzani explains that "head-mounted computer **510**‴" includes "a display pod **1100′**, which includes a display panel" and "a Charge Coupled Device (CCD) camera **555***b*":

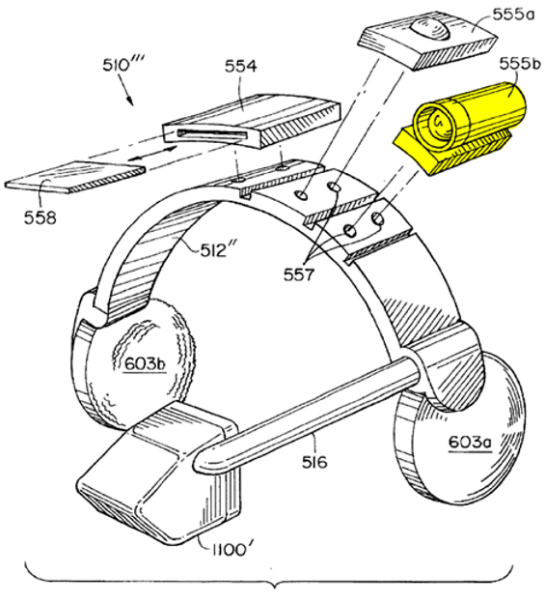

Fig. 33

(Ronzani, Fig. 33 (highlighting added); *see also id.*, ¶0154 ("**FIG. 33** is a perspective view of another preferred head-mounted computer **510**″. As illustrated, there is

a head band **512″**, stereo headphones **603**A, **603**B, a display arm **516** connecting the headband **512″** to a display pod **1100′**, which includes a display panel…. Also illustrated are expansion modules **514**, an infrared communication sensor **555** *a* and a Charge Coupled Device (CCD) camera **555***b*.”).)

116. **Rationale and Motivation to Combine (Jaszlics-Rallison-Sofer and Ronzani)**. It would have been obvious to a person of ordinary skill in the art to combine Ronzani’s teachings regarding a head-mounted camera that is part of a head-mounted display device with Jaszlics’ combined reality system involving a user wearing electronic goggles/visor (and under the proposed combination with Rallison and Sofer). The combination would have involved the straightforward addition of one or more cameras to Jaszlics’ electronic goggles/visor and would have predictably resulted in a “**head-mounted device**…**comprising**…**a detector**” as claimed where the “**detector**” (a camera-based range scanner) is itself mounted on the user’s head as a part of the “**head-mounted device**.”

117. Ronzani is an analogous reference to the ’559 patent. Like the ’559 patent, Ronzani relates to a head-mounted display device that can be used for various purposes including for entertainment and military activities. (Ronzani, e.g., ¶¶0005, 0189.) Ronzani also would have been reasonably pertinent to problems facing the ’559 patent inventor, including techniques for head-mounting various devices (such

as a camera) as part of a head-mounted display device system.

118. A person of ordinary skill in the art would have been motivated to combine. As discussed above, a person of ordinary skill in the art would have appreciated that it would be desirable for Jaszlics' camera-based range scanner to be placed in close proximity to the user's vantage point. Therefore, a person of ordinary skill in the art, seeking to implement or adapt Jaszlics' teachings, would have been motivated to investigate potential ways in which a camera could be implemented for a mobile individual—and would have recognized that a head-mounted camera would have been obvious to try. A person of ordinary skill in the art would have therefore looked to a reference like Ronzani—which describes head-mounted display devices for similar entertainment and military-based uses as Jaszlics—for its disclosures confirming and describing implementations of a head-mounted camera for a mobile individual.

119. I also note that **Sofer**, discussed above in connection with the first "**detector**" mapping, further confirms the obviousness of a head-mounted camera. Sofer expressly discloses head-mounted cameras as part of its head-mounted range scanning device. Referring again to Figures 2 and 4 of Sofer, they together illustrate an exemplary headset that includes two cameras, i.e., (1) camera/CCD sensor **205** and (2) camera/CCD sensor **206**:

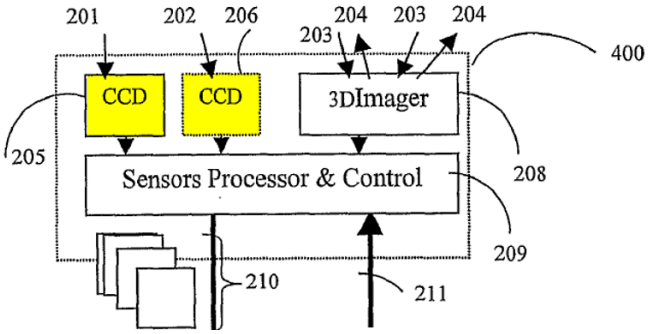

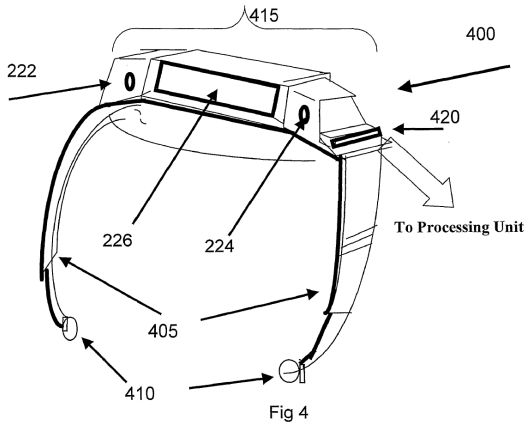

(Sofer, Fig. 2 (excerpt; highlighting added), Fig. 4; *see also id.*, p.008 ("The input unit **400**, illustrated in Fig. 4 comprises two sensors, CCD sensor **205** and 3D imager **208**, and an optional third sensor shown as CCD sensor **206**."), p.0013 ("Video sensor **205**, i.e., a CCD chip or miniature television camera…[is] mounted in the headset carrying compartment **415**.").) As Sofer explains, "both CCD sensors **205** and **206** are used to compute the distance to the object's points in addition to their roles as color sensing cameras." (Sofer, p.008.) The rationale and motivation to combine Sofer discussed above applies here as well.

120. A person of ordinary skill in the art would have had a reasonable expectation of success. The combination would have simply involved where to place a known, available camera device—in this case, mounting the device on the user's head.

(d) "a device for updating the physical location of said device on said physical playfield, wherein said video game logic utilizes the physical location of said device in providing said video game." (Claim 1[d])

121. Claim 1**[d]** recites "**a device for updating the physical location of said device on said physical playfield**." I will refer to this "**device**" as a "[locating] **device**" to help distinguish it from the recited "**head-mounted device**."

122. As explained below, this limitation is obvious over Jaszlics alone or in view of **Ronzani**. I combine with Ronzani, for reasons similar to claim 1**[c]**—i.e., in connection with explaining the obviousness of a "[locating] **device**" that is head-mounted as a part of the claimed "head-mounted device."

123. With respect to a "[locating] **device**," the '559 patent identifies a GPS device as an example of a "locating device" or "location device." ('599, 4:23 ("If the locating device is a GPS device…."), 20:64-66 ("location devices (e.g., GPS, LPS, accelerometers, gyroscopes, inertial movement sensors, hybrid location systems) **1445**").)

124. Jaszlics likewise discloses GPS. Jaszlics discloses using "observer sensors" for sensing a user's position, and that the observer sensors can include "a position determination system, such as a differential Global Positioning Satellite System (GPS)." (Jaszlics, 10:53-11:4 ("For moving observers, who may be

individuals moving in the real world, or housed in a vehicle, the observer sensors include a position determination system, such as a differential Global Positioning Satellite System (GPS)."); *see also id.*, 16:30-32 ("A Global Positioning Satellite (GPS) receiver, with optional differential correction, and an aircraft altimeter determine the three-dimensional position of the observer.").) Jaszlics therefore discloses a "[locating] **device**" in the form of a GPS receiver.

125. Jaszlics further explains that the GPS receiver (as an "observer sensor") is used during game play "**for updating the physical location of said device on said physical playfield**":

> Changes in the position and orientation of the observer, of a vehicle housing the observer, or of movable elements of the vehicle (e.g. a tank's turret) as sensed by the observer's sensors and controls are processed by the observer state and action processing step. The virtual entity simulation receives this information for updating the simulation, in which the avatar of the observer, or the avatar of the observer's vehicle is represented. Both the virtual entity simulation and the virtual masking object generation function will respond to the position and attitude changes of the observer, or the observer's vehicle. Such changes will affect the angular orientation of the virtual entities and virtual masking objects, and the apparent distance from observer to virtual entities and masking objects.

(Jaszlics, 11:30-43; *see also id.*, 10:53-11:4 ("For moving observers…."), 10:29-34 ("The observer's interactions with the real world also include the movement of the observation point (in the case of a battle tank, the movement of the vehicle and rotation of the turret), and the resulting changes of three-dimensional position and attitude.").) Jaszlics therefore discloses the claimed "[locating] **device**" in the form of a GPS receiver associated with the user and used to determine and update the receiver's (and thereby, the user's) physical location as the user (and receiver) moves about their physical environment. (And as a part of the head-mounted device, the GPS receiver's location updates would also correspond to the updated physical location of the head-mounted device.)

126. Jaszlics also teaches "**said video game logic utilizes the physical location of said device in providing said video game**." As discussed above, Jaszlics explains that the system utilizes user sensor information that it receives, such as position information, to update the simulation ("**said video game**") accordingly. (Jaszlics, 11:30-43; *see also id.*, 11:14-21 ("The signals generated by the observer sensors and controls are stored and processed by the Observer State and Action Processing step **116** in FIG. 2. State vectors (three-dimensional position, angles, velocity, and angular velocities) are generated for the observer, and for the observer's vehicle (if any). Observer actions sensed by the observer's sensor and controls are

<u>transformed into data or control signals appropriate for responding to the observer's actions</u>.”).) Figure 2 of Jaszlics, below, illustrates how information from observer sensors **115** (such as a GPS receiver) is input into a virtual entity simulation **107** provided by the virtual simulation and control software (“**said video game logic**”), which ultimately results in the combined reality image provided to the user:

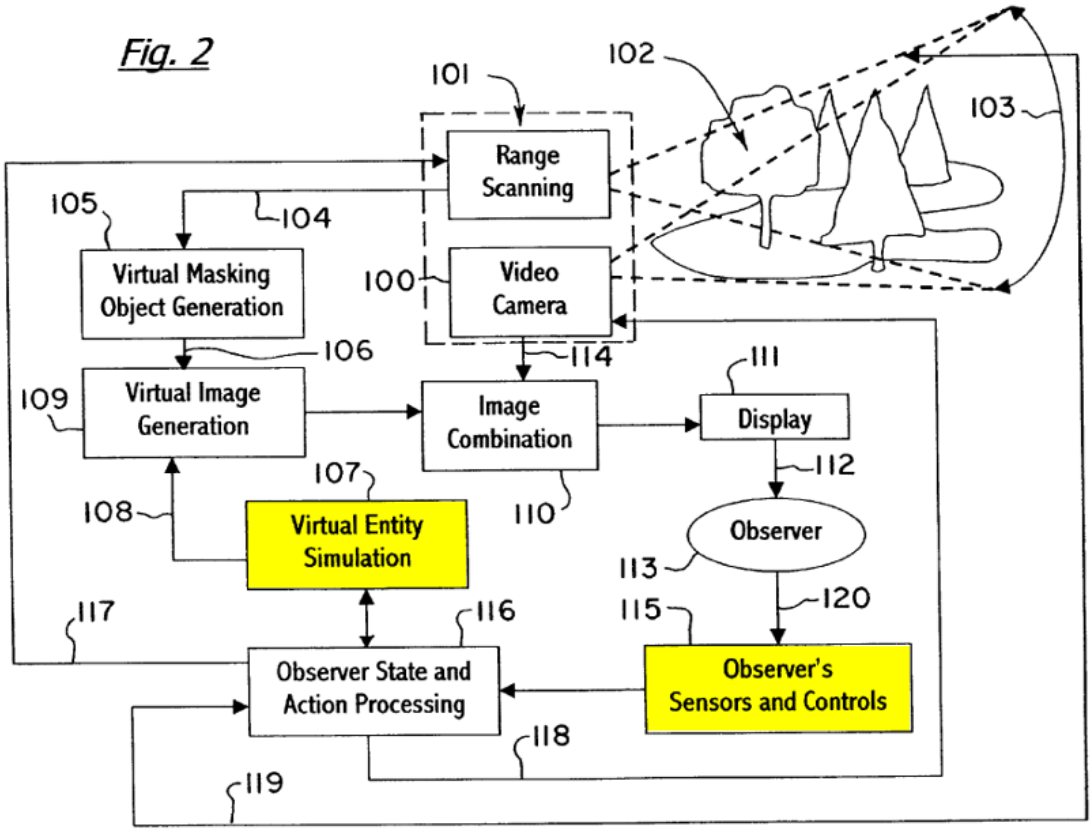

(Jaszlics, Fig. 2 (highlighting added); *see also id.*, 14:66-15:1 (“Virtual entity simulation is implemented in the virtual simulation computer through the virtual simulation and control software.”).)

127. Jaszlics therefore teaches that system software including virtual simulation and control software ("**said video game logic**") uses physical location information provided by a GPS receiver ("**utilizes the physical location of said device**") to provide updated virtual simulation game play based on that information ("**in providing said video game**").

128. I will turn now to address how Jaszlics, alone or in view **Ronzani**, renders obvious a "[locating] **device**" that is head-mounted as a part of the recited "head-mounted device."

129. Just like Jaszlics' range scanner, it would have been obvious to a person of ordinary skill in the art for the user's GPS receiver to be head-mounted. This is because, as discussed, Jaszlics teaches that the user can be a mobile individual. (Jaszlics, e.g., 10:63-67, 5:13-18, 1:64-67 (describing laser tag).) A person of ordinary skill in the art would have understood that, in order to continue to present a usable and realistic simulation, updated positioning information would need to be collected about the user as the user moved around their environment—in fact, as noted above, this is expressly acknowledged in Jaszlics. (Jaszlics, e.g., 11:30-43.) In order to collect accurate information about that user's position, the GPS receiver would need to be kept in close proximity to the user—and the user's head, as the body location most capable of receiving unobstructed signals from overhead GPS

satellites, would have been an obvious choice from a finite number of body locations.

130. To the extent there is any question whether it would have been obvious for a GPS receiver to be head-mounted as a part of the head-mounted device, this is expressly disclosed by **Ronzani**. As discussed, Ronzani describes various embodiments of a head-mounted display device—including head-mounted display devices that include a GPS receiver. For example, Figure 42 of Ronzani, shown below, is a "functional block diagram of a head-mounted military computer **710F**":

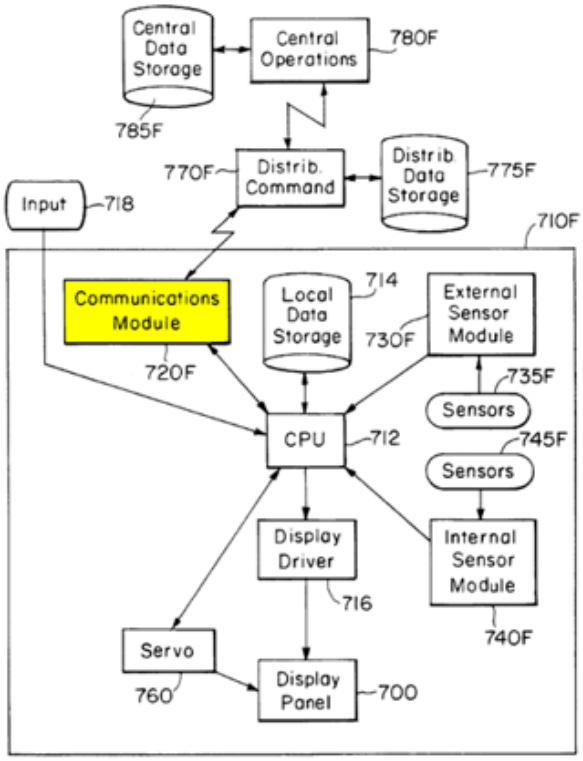

Fig. 42

(Ronzani, Fig. 42 (highlighting added), ¶0189.) As highlighted in the figure above,

the "head-mounted military computer" includes a Communications Module 720F, which can "contain a GPS, which provides the soldier and command officers with the soldier's location." (Ronzani, ¶0191.) Ronzani also describes numerous other, non-military, head-mounted devices that include GPS. (Ronzani, e.g., ¶¶0179-0181 ("head-mounted police computer" "can also include a GPS"), 0182-0183 ("head-mounted computer **710**C for use by chemical factory workers" "can also include a GPS"), 0200-0201 ("head-mounted survival computer" "includes a GPS").)

131. **Rationale and Motivation to Combine (Jaszlics-Rallison-Sofer with Ronzani)**. I discussed the rationale and motivation to combine Jaszlics (and Rallison and Sofer under the proposed combination) with Ronzani in connection with my analysis of claim 1**[c]**, which applies here as well. With respect to claim 1**[d]**, it would have also been obvious to combine Ronzani's teachings regarding a head-mounted GPS receiver with Jaszlics' combined reality computing system (and under the proposed Jaszlics-Rallison-Sofer combination). The combination would have involved no change in function and would have predictably resulted in a head-mounted GPS receiver as a part of the user's electronic goggles/visor—thereby disclosing "**head-mounted device**…**comprising**…**a** [locating] **device**" as claimed.

132. As discussed for claim 1**[c]**, Ronzani is an analogous reference to the '559 patent. With respect to claim 1**[d]**, Ronzani also would have been reasonably

pertinent to problems facing the ’559 patent inventor, including techniques for head-mounting various sensors, receivers, and other devices as part of a head-mounted display device system.

133. A person of ordinary skill in the art would have been motivated to combine. As discussed above, a person of ordinary skill in the art would have appreciated that it would be desirable for Jaszlics’ GPS receiver to be placed in close proximity to the user. Therefore, a person of ordinary skill in the art, seeking to implement or adapt Jaszlics’ teachings, would have been motivated to investigate potential ways in which a GPS receiver could be implemented for a mobile individual—and would have recognized that a head-mounted GPS receiver would have been obvious to try. A person of ordinary skill in the art would have therefore looked to a reference like Ronzani—which as noted describes head-mounted display devices for similar entertainment and military-based uses as Jaszlics (Ronzani, ¶¶0005, 0189)—for its disclosures confirming and describing implementations of a head-mounted GPS receiver for a mobile individual.

134. A person of ordinary skill in the art would have had a reasonable expectation of success. As with a head-mounted camera, the combination would have simply involved where to place a known, available GPS receiver—in this case, mounting the device on the user’s head.

2. Claim 12: "The head-mounted device of claim 1, wherein said display is a non-transparent display, said device includes an accelerometer, and said detector includes a camera."

135. To facilitate my analysis, I will address each portion of claim 12 separately below.

(a) "said display is a non-transparent display"

136. With respect to display of the head-mounted device being a "**non-transparent display**," it would have been obvious for the display of Jaszlics' electronic display goggles/visor to be "**non-transparent**."

137. In particular, *optical* see-through and *video* see-through were the two known techniques for providing see-through head-mounted displays. For example, J.P. Rolland et al., "A comparison of optical and video see-through head-mounted displays" ("**Rolland**") [EX1013], explains that "[t]o obtain an enhanced view of the real environment, the user wears a see-through HMD to see 3D computer-generated objects superimposed on his/her real-world view. <u>This see-through capability can be accomplished using either an optical or a video see-through HMD</u>." (EX1013, p.007 ("Abstract").)

138. In *video* see-through, the display is **non-transparent**, and the view of the user's physical surroundings is via video image provided by head-mounted camera(s). (EX1013, p.007 ("With a video see-through HMD, the real-world view

is captured with two miniature video cameras mounted on the head gear"); *see also id.*, p.0010 ("Video see-through HMDs are more invasive in the sense that they block out the real-world view in exchange for the ability to merge the two views more convincingly."), p.0012 ("In the case of video see-through HMDs, real-scene images are digitized by miniature cameras and converted to an analog signal which is fed to the HMD displays.").) With optical see-through, the display is transparent. (EX1013, p.007 ("With optical-see-through HMDs, the real world is seen through semi-transparent mirrors placed in front of the user's eyes, as shown in Figure 1. These mirrors are also used to reflect the computer-generated images into the user's eyes, thereby combining the real- and virtual-world views.").)

139. It would have been obvious in Jaszlics' combined reality system for the display of the user's head-mounted electronic display goggles/visor to be "**non-transparent**." For starters, Jaszlics suggests both *optical* see-through and *video* see-through displays. With respect to *optical* see-through, for example, claim 4 of Jaszlics describes how the user's field of view comprises "the field of view visible <u>through</u> [the electronically-controlled] visor." (Jaszlics, 23:56-59.) This is consistent with the optical-see through visor depicted in Figure 1

Figure 1. Optical see-through head-mounted display (Photo courtesy of Kaiser Electro-Optics).

of Rolland (at right). (EX1013, p.008.)

140. But Jaszlics also suggests *video* see-through—i.e., "**a non-transparent display**." Jaszlics describes "virtual reality goggles" as a suitable display device. (Jaszlics, 9:48-57.) Virtual reality googles—such as those shown in Figure 2 of Rolland at right—were known to use a non-transparent display and incorporate a view of the user's real-world surroundings, if at all, "into a computer-generated environment" by using "portions of real-world images." (Jaszlics, 1:25-28; *see also* EX1013, p.008 (Fig. 2 (at right)).)

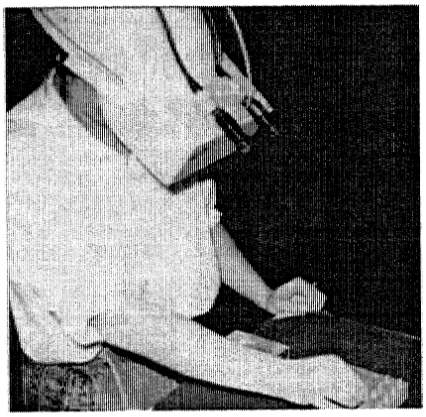

Figure 2. A video see-through head-mounted display.

141. Moreover, as noted, Jaszlics describes using a camera to obtain images of the user's field of view. For example, referring to Figure 2, reproduced below, Jaszlics how "virtual images…are combined with the real-world image **114** originating from the video camera **100**":

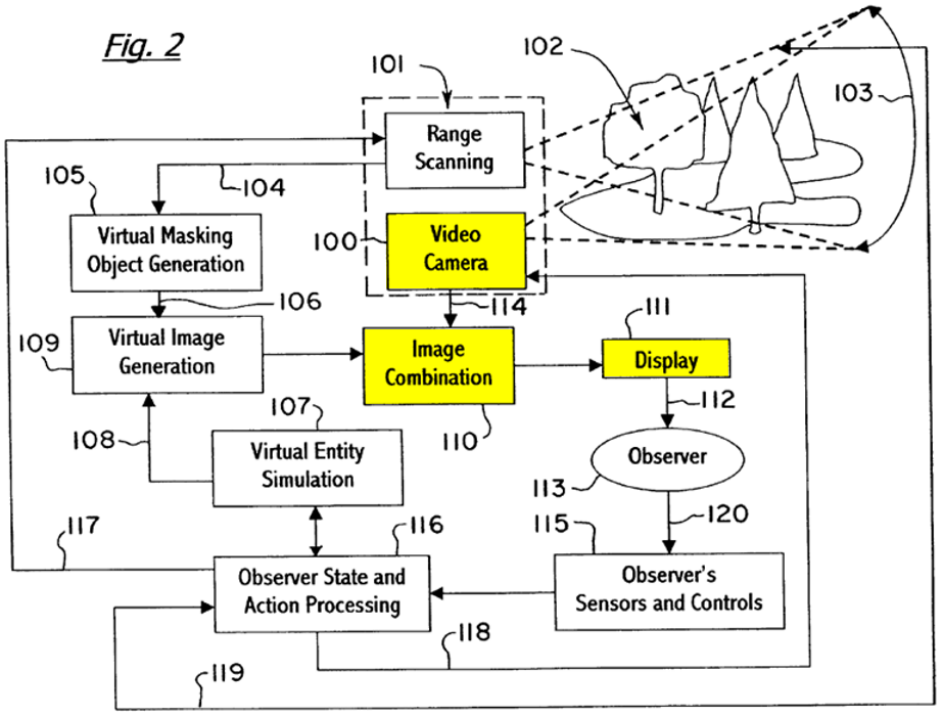

(Jaszlics, Fig. 2 (highlighting added), 8:53-56.) And as noted for claim 1**[c]**, Jaszlics further indicates that the camera could be head-mounted, explaining how "[c]hanges in the <u>head position of the observer in some implementations of the invention will control the optical axes of the video camera</u> and range scanner, to ensure that scanning and real-world scene acquisition coincides with the observer's current field of view." (Jaszlics, 11:43-47.)

142. Even if there is any question whether Jaszlics expressly discloses or suggests using a "**non-transparent display**" as claimed, it would have been obvious to try. For example, Ronzani discloses both transparent and non-transparent head-mounted displays. (*See generally,* Ronzani, e.g., ¶¶0011-0012, 0276, 0280, Figs. 66

& 67 (transparent displays), Figs. 32A & 33 (non-transparent displays).) And as Rolland notes, video see-through displays—i.e., non-transparent displays—were one of two known types of head-mounted see-through displays. Rolland also provides motivation to use a "non-transparent display," explaining that they have the ability to merge virtual and real-world elements "more convincingly." (EX1013, p.0010.) Using a "**non-transparent display**" therefore would have been obvious over the prior art and background knowledge of a person of ordinary skill in the art.

(b) "said device includes an accelerometer"

143. This portion of claim 12 would have been obvious over Jaszlics in view of **Rallison**.

144. Jaszlics, for its part, discloses using sensors to detect "three-dimensional position and attitude" and "used in conjunction with virtual reality goggles." (Jaszlics, 10:48-57 ("Observer sensors and controls **115** (in FIG. **2**) are devices using existing technology….The position and orientation of the observer (including the movement and attitude of the vehicle, if any, housing the observer) is sensed by observer sensors and controls **115** such as a magnetic or infrared head tracker system used in conjunction with virtual reality goggles."), 10:26-34 ("Observer actions also include interactions of the observer with the real world, such as head movement of the observer….The observer's interactions with the real world

also include the movement of the observation point (in the case of a battle tank, the movement of the vehicle and rotation of the turret), and the resulting changes of three-dimensional position and attitude.”).) Jaszlics does not appear to expressly disclose that the position and orientation sensors include an “**accelerometer**,” but it would have been obvious.

145. For example, **Rallison** describes a head-worn “tracker” device “for outputting an indication of the orientation, attitude and/or position of a head-mounted display (HMD).” (Rallison, Abstract.) The tracker can use different types of sensors, such as “magnetic sensors” or “one or more inertial sensors, such as a rate gyro and/or accelerometers.” (Rallison, Abstract; *see also id.*, 5:5-17 (“inertial sensors (such as one or more accelerometers) for detecting pitch and/or roll”).) Figure 25C of Rallison, reproduced below, depicts two accelerometers **562**a and **562**b, of a tracker device, which “can be integrally built into the head-mounted display device”:

FIG. 25C

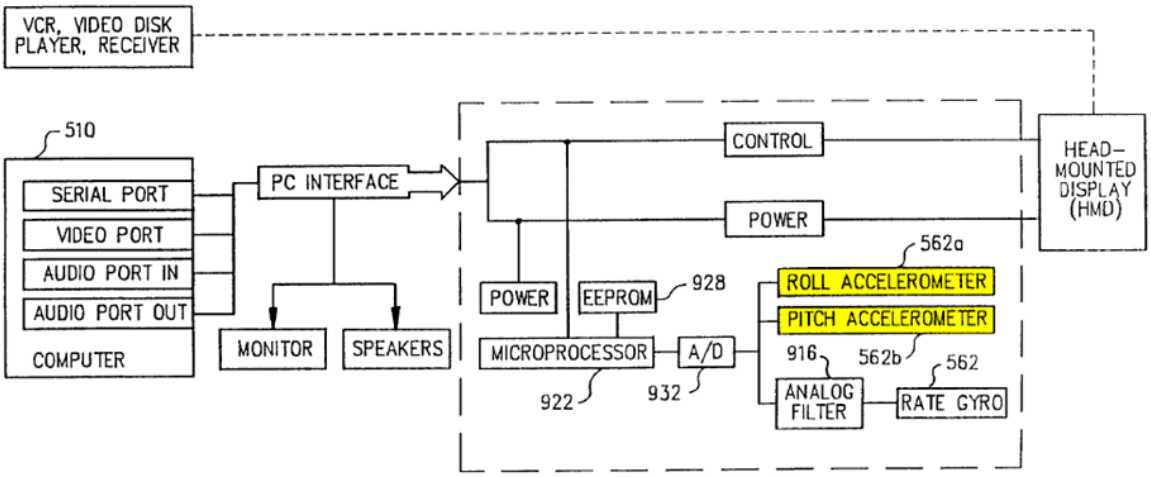

(Rallison, Fig. 25C (highlighting added); *see also id.*, 20:60-63 ("In the embodiment of FIG. **25**C, pitch and roll are sensed respectively by accelerometers **562**a, **562**b...."), 17:50-55 ("[O]ne or more trackers can be integrally built into the head-mounted display device.").)

146. The combination of Rallison's teachings with Jaszlics would have predictably resulted in electronic goggles/visor ("**head-mounted device of claim 1**") that "**includes an accelerometer**." The rationale and motivation to combine Jaszlics and Rallison discussed for claim 1**[a]** applies here as well. In addition, it would have been obvious, and imperative, to a person of ordinary skill in the art to use observer sensors to determine attitude/orientation of the user's head-mounted display in order to correctly overlay virtual entities in the user's field of view. Without pitch and roll information regarding the head-mounted display, the virtual

entities would not be properly registered to their intended locations from the user's perspective. For example, a virtual tank might be incorrectly placed over the sky instead of appearing at ground level. This imperative is recognized in Jaszlics, which explains that "[c]hanges in the head position of the observer in some implementations of the invention will control the optical axes of the video camera and range scanner, <u>to ensure that scanning and real-world scene acquisition coincides with the observer's current field of view</u>." (Jaszlics, 11:43-47.) As Rallison teaches, using a head-mounted accelerometer is one of a finite number of ways of achieving this imperative, and accordingly it would have been obvious to try.

(c) "said detector includes a camera"

147. For claim 12, "**said detector**" refers back to the "**detector for determining landscape characteristics of said physical playfield**" recited in claim 1. As discussed above for claim 1**[c]**, Jaszlics discloses and renders obvious "**said detector**" in the form of a range scanner, and also more specifically in the form of a *camera*-based range scanner. Therefore, for the reasons discussed for claim 1**[c]**, Jaszlics discloses and renders obvious "**said detector includes a camera**."

3. Claim 17: "The head-mounted device of claim 1, wherein the pitch, roll, and direction of said head-mounted display are utilized in said video game."

148. With respect to "**pitch**" and "**roll**," as discussed for claim 12, Jaszlics discloses using sensors to detect "three-dimensional position and attitude" and "used in conjunction with virtual reality goggles." (Jaszlics, 10:48-57, 10:26-34.) Three-dimensional "attitude" includes pitch, roll, and yaw. (*See, e.g.*, Joseph Angelo, Dictionary of Space Technology [EX1015], p.004 (entry for "attitude" stating "Attitude often is expressed in terms of pitch, roll, and yaw."); U.S. Patent No. 6,411,266 B1 [EX1005], 4:62-64 ("A viewer head attitude monitor **38** is provided for monitoring the attitude of the viewer's head. By 'attitude' is meant the same concept used in regard to aircraft pitch, roll and yaw.").)

149. Jaszlics also discloses sensing "**direction**," explaining that, for moving users, sensors to detect "changes in spatial direction" "must be included":

> For moving observers, who may be individuals moving in the real world, or housed in a vehicle, the observer sensors include a position determination system, such as a differential Global Positioning Satellite System (GPS). If the platform housing the observer changes its spatial direction, an attitude sensing system, such as a three-antenna GPS system measuring angular differences by signal phase shift measurements must be included in the suite of observer sensors.

(Jaszlics, 10:63-11:4.)

150. For the same reasons discussed in connection with claim 12, a person of ordinary skill in the art would have understood and found it obvious that the detected "**pitch, roll and direction**" would be "**of said head-mounted display**"—it would be imperative for this information to be associated with the head-mounted display in order to correctly overlay virtual entities in the user's field of view.

151. Lastly, Jaszlics makes clear that "**pitch, roll and direction**" are "**utilized in said video game**." In particular, Jaszlics explains that the observer sensor information, which includes pitch, roll and direction, is used to update the simulation ("**said video game**"):

> Changes in the position and orientation of the observer, of a vehicle housing the observer, or of movable elements of the vehicle (e.g. a tank's turret) as sensed by the observer's sensors and controls are processed by the observer state and action processing step. <u>The virtual entity simulation receives this information for updating the simulation, in which the avatar of the observer, or the avatar of the observer's vehicle is represented</u>. <u>Both the virtual entity simulation and the virtual masking object generation function will respond to the position and attitude changes of the observer</u>, or the observer's vehicle.

(Jaszlics, 11:30-43; *see also id.*, 11:14-21 ("Observer actions sensed by the observer's sensor and controls are transformed into data or control signals

appropriate for responding to the observer's actions.").)

4. Claim 20: "The head-mounted device of claim 1, wherein said detector is utilized before the start of said video game."

152. Claim 20 would have been obvious over Jaszlics in two separate ways.

153. First, as a simple matter, it would have been obvious to use Jaszlics' range scanner ("**said detector**") immediately before actually starting game play in order to ensure that the simulation was properly displayed to the user from the outset. Without range scanning before game play, virtual elements might be incorrectly or confusingly rendered to the user, even if only momentarily. Range scanning before game play would thus help ensure a realistic experience without any initial delays in providing the intended combined reality experience.

154. Second, Jaszlics describes using a camera before starting a simulation in order to determine and correct landscape characteristics. In particular, Jaszlics explains how terrain data obtained from the US Geological Survey may need to be edited before it can be used in a simulation because the data "usually does not correspond exactly to the terrain visible through the video camera **200** (FIG. 16), or sensed by the laser scanner **203**." (Jaszlics, 17:1-4.) "To correct the VRML elevation grids on the basis of real-world data," Jaszlics explains, "during scenario preparation, <u>before a scenario is executed by the virtual simulation and control</u>

software, the direct video feed from the video camera can be used to edit the VRML terrain grid." (Jaszlics, 17:4-14; *see also id.*, 17:14-18 ("In this editing mode, the virtual image of the terrain grid, displayed by the Java component of the route generation module, is mixed, through the video mixer **213** with the video image of the corresponding terrain in the S-Video display **215**.").)

155. It would have been obvious for "the video camera" Jaszlics describes using to correct landscape characteristics to be the head-mounted camera comprising the *camera*-based range scanner ("**said detector**") I discussed in connection with claim 1**[c]**. It would have simply involved the straightforward use of one or more of the cameras of the camera-based range scanner—and would have predictably resulted in "[t]**he head-mounted device of claim 1, wherein said detector** [camera-based range scanner] **is utilized before the start of said video game** [a simulation provided by a scenario]" as claimed.

156. A person of ordinary skill in the art would have been both motivated to use the head-mounted camera and would have found it obvious to try. Because the head-mounted camera would accurately capture the landscape from the user's vantage point, a person of ordinary skill in the art would have appreciated that using the head-mounted camera could advantageously allow the user to, in turn, accurately correct the terrain data. Moreover, with respect to using *stereo* cameras of a camera-

based range scanner, doing so would provide the user with a more consistent viewing experience that would help both to preserve a realistic 3-D viewing experience and to reduce potential disorientation that may come from switching between 2-D and 3-D views of their surroundings. Furthermore, because the actual terrain may include trees and other objects partially occluding the user's view, using stereo cameras would help the user to see more of the scene so that the terrain data might be more accurately corrected. In addition, as one of a finite number of cameras in Jaszlics' combined reality system, using the head-mounted camera(s) would have been obvious to try.

V. NO SECONDARY CONSIDERATIONS OF NONOBVIOUSNESS

157. As explained in **Part III.B**, I understand that "secondary considerations" may be used as indicia of nonobviousness, provided that any such consideration has a nexus to the invention claimed. I understand from Petitioner's counsel that Patent Owner in the related district court litigation has not yet identified any evidence related to secondary considerations with a nexus to the claimed invention. Nor am I aware of information, such as commercial success, unexplained results, long felt but unsolved need, industry acclaim, simultaneous invention, copying by others, skepticism by experts in the field, and failure of others, suggesting that the claims addressed in this Declaration are not obvious. To the

extent Patent Owner later provides information it claims relates to secondary considerations, I reserve the right to supplement my analysis and opinions to comment on it.

VI. CONCLUSION

158. In signing this Declaration, I recognize that the Declaration will be filed as evidence in a contested case before the Patent Trial and Appeal Board of the United States Patent and Trademark Office. I also recognize that I may be subject to cross-examination in this proceeding. If required, I will appear for cross-examination at the appropriate time. I reserve the right to offer opinions relevant to the invalidity of the challenged claims at issue and/or offer testimony in support of this Declaration.

159. I hereby declare that all statements made herein of my own knowledge are true and that all statements are made on information and belief are believed to be true, and further that these statements were made with the knowledge that willful false statements and the like so made are punishable by fine or imprisonment, or both, under 18 U.S.C. § 1001.

Dated: March 24, 2025

Respectfully submitted,

Jeremy Cooperstock, Ph.D.
Montreal, Quebec, Canada

APPENDIX A

CURRICULUM VITAE

Jeremy R. Cooperstock

Version as of March 24, 2025

Contents

Biographical **3**
- Personal Data . . . 3
- Education . . . 3

Awards and Distinctions **3**

Work Experience **5**
- Career Highlights . . . 5
- Academic Experience . . . 7
- Industrial and Consulting Experience . . . 8
- Litigation and Expert Witness Experience . . . 9

Research Dissemination **13**
- Journal Articles . . . 17
- Refereed Conference Publications . . . 34
- Book Chapters . . . 36
- Other Refereed Contributions . . . 37
- Non-refereed Contributions . . . 38
- Patents . . . 39
- Technology Transfer . . . 39
- Research Demonstrations . . . 39
- Invited Talks . . . 40
- Media Exposure . . . 47

Research Supervision **50**
- Research Professionals . . . 50
- Post-doctoral Fellows . . . 52
- Ph.D. Students . . . 54
- Masters Students . . . 58

Funding **65**
- Individual Research Grants and Contracts . . . 65
- Team Research Grants and Contracts . . . 69
- Centre Research Grants . . . 72

Teaching **74**
- Courses Taught . . . 74
- Undergraduate Supervision . . . 76

Service **86**
University Service 86
Professional Activities 88
Service to Society 92

Meta Exhibit 1002
Meta v. Mullen - Page 00102

Biographical

Personal Data

Nationality	Canadian
Languages	English, French and Hebrew
Address	Department of Electrical and Computer Engineering, McGill University 3480 University Street, Montreal, QC, H3A 0E9, Canada
Telephone	(514) 398-5992
email	jer@cim.mcgill.ca

Education

Ph.D.	Electrical and Computer Engineering, University of Toronto, 1996. Thesis: "Reactive Environments and Augmented Media Spaces." (Nominated for NSERC Doctoral Dissertation Award) Advisors: Prof. K.C. Smith and Prof. W. Buxton
M.Sc.	Computer Science, University of Toronto, 1992. Thesis: "Neural Network Operated Vision-Guided Mobile Robot Arm for Docking and Reaching." Advisor: Prof. E. Milios.
B.A.Sc.	Electrical Engineering, Computer Engineering Option, University of British Columbia, 1990 (Honours)

Awards and Distinctions

2024	Best Poster Award, "Investigating Haptic Co-Creation with Reinforcement Learning", Eurohaptics [CP1]
2024-2029	Werner Graupe Distinguished Chair in Automation Engineering, McGill University ($15,000 plus research stipend of $30,000 per annum)
2022	Honorable Mention, "The Sound of Hallucinations: Toward a more convincing emulation of internalized voices" (top 5% of papers), Human Factors in Computing Systems (CHI) [C5]
2022	Finalist, Best Applications Paper Award, "Speaking Haptically: from Phonemes to Phrases with a Mobile Haptic Communication System", Transactions on Haptics [J4]
2019	Honorable Mention, "Detecting Perception of Smartphone Notifications using Skin Conductance Responses" (top 5% of papers), Human Factors in Computing Systems (CHI) [C34]
2019	San Diego Opera, Opera Hack award, Hamsafar! ($10,000, with 5 co-awardees)
2018	Best poster presentation award, "Enhanced Pressure-Based Multimodal Immersive Experiences", Augmented Human [CP12]

Meta Exhibit 1002
Meta v. Mullen - Page 00103

2015	Gerald W. Farnell Teaching Scholar, Faculty of Engineering ($12,500)
2014	US Ignite Best App in Education, Augmented Reality for Improved Training of First Responders
2013	Canadian National Institute for the Blind, Hochhausen Access Technology Research Award ($10,000)
2013	Best paper award, "Vibrotactile Rendering of Splashing Fluids", Transactions on Haptics [J17]
2013	Best use of sound award, "The Walking Straight Mobile Application: Helping the Visually Impaired Avoid Veering, International Conference on Auditory Displays [C62]
2012	Mozilla Foundation and NSF Gold Prize in the Mozilla Ignite Challenge (out of 305 submissions in the Brainstorming Round) ($5,000) for Real-Time Emergency Response
2012	Canadian Internet Registry Association .CA Impact Award (Applications category) for In-Situ Audio Services Project ($5,000)
2011	Best paper award, "What's around me? Spatialized audio augmented reality for blind users with a smartphone", Mobile and Ubiquitous Systems [C73]
2010	Best paper award, "Design of a Vibrotactile Display via a Rigid Surface", Haptics Symposium [C82]
2009, 2010	Nominee, NSERC Brockhouse Canada Prize
2009	Best paper award, "SoundPark: Exploring Ubiquitous Computing through a Mixed Reality Multi-player Game Experiment", 9e Conférence Internationale sur Les NOuvelles TEchnologies de la REpartition [C92]
2005	ACM/IEEE Supercomputing, Most Innovative Use of New Technology for Wide Screen Window on the World: Life Size HD Videoconferencing
2001	Audio Engineering Society Citation Award for pioneering the technology enabling collaborative multichannel performance over the broadband internet

Meta Exhibit 1002
Meta v. Mullen - Page 00104

Work Experience

Career Highlights

Haptic Information Delivery (2018-2021) My lab's haptics research has resulted in prominent visibility in the preeminent journal, IEEE Transactions on Haptics, and the two top-tier international conferences in the field, IEEE Haptics Symposium and IEEE World Haptics Conference, with a dozen publications in these forums between 2020 and 2021. Given my recognition in the field, I was invited to serve on the editorial boards of all of these bodies, in addition to the specialty section on haptics of the Frontiers Journal in Virtual Reality. Specific examples of significant contributions include the performance attained through use of our two-actuator apparatus and phonemic encoding for tactile communication of natural language [C31, J4, C9], which outperformed the previously cited best results on this task, achieved by Facebook Research Labs. A second contribution relates to the high recognition rates we attained for multi-dimensional tacton delivery (3 parameters, each at 3 levels), targeting clinical patient-monitoring scenarios. This work inspired studies of wearable vibrotactile devices for physiological monitoring of patients [C30, C19]. While our results were achieved initially using a set of three actuators [C44, C41, C32, C22], we subsequently demonstrated equivalent recognition performance via only a single vibrotactile actuator, with a novel parameter encoding scheme [C21]. We further demonstrated achievement of the highest information transfer rates reported in the literature for such a single-actuator device [C16].

Physiological Sensing (2017-2020) Our research for detection of smartphone notifications was recognized by an Honourable Mention (top 5% of papers) from the top-tier ACM Conference on Human Factors in Computing ([C34]), and led to a recent patent filing ([P1]). This work has the potential to serve as not only for more intelligent, context-sensitive notification delivery, but also, as a tool that can be exploited to combat the prevalent and adverse effects of Internet addiction, driven largely by "fear of missing out."

Real-Time Emergency Response (rtER) (2012-2013) provides an envisionment of the future of next-generation 911 (NG-911) technologies, supporting enhanced situational awareness for first responders through the use of citizen-supplied smartphone video streams and other relevant data [J15]. Our work was recognized by the *Gold Prize* from the Mozilla Ignite Fund, featured on the web site of the White House Office of Science and Technology, and prompted the launch of a funding program by the U.S. Department of Justice.

Autour (2009-2018) is an "eyes-free" app for the blind, which provides a rich, spatialized audio representation of one's environment [J22, C73, C64, C61]. The project further motivated a rigorous analysis of smartphone sensor reliability, resulting in what was the first comprehensive examination of practical limits on smartphone sensors, including the problems of gyro drift [C64].

Mobile Treatment Device for Amblyopia (2009-2012, in collaboration with ophthalmologist R. Hess) is a patented prototype Mobile Treatment Device for Amblyopia [P10] ("lazy eye"). Initial trials [J21], based on the popular Tetris game, provided highly promising early results [J29, J24], not only restoring the use of both eyes in a majority of patients but even resulting in binocular (3D) depth perception in some. Most significantly, the treatment has been found to work successfully

Meta Exhibit 1002
Meta v. Mullen - Page 00105

on adult populations, whereas the prevailing wisdom had been that treatment was only possible on children. The technology has now been acquired by Novartis, who are commercializing the system.

Natural Interactive Walking (2008-2017) investigated multimodal interaction with virtual ground surfaces, resulting in important findings of tactile discrimination ability [J23] and the role of vibrotactile stimulation in perception of compliance [J30]. Our "Ecotile" prototype (patent [P7]) was showcased at numerous venues including SIGGRAPH, and led to related research involving limb modeling [C75, C59, C53], foot-water interaction [J17], and variable-friction walking interfaces [C69, C60, J8].

Ultra-Videoconferencing (2002-2006) is our low-latency, high-fidelity network transport, used for distance music teaching with Maestro Pinchas Zuckerman, cross-continental jazz jams, and remote sign language interpretation. The Globe and Mail described Cooperstock's 2001 demonstration as "a watershed event for the elite club of the world's computer network engineers." Ultra-Videoconferencing garnered my research group a prestigious Citation Award from the Audio Engineering Society and the Award for Most Innovative Use of New Technology from ACM/IEEE Supercomputing (2005). This research directly constituted the basis for subsequent funding of $2.2M from Valorisation Recherche Quebec and over $4M from Canarie, and influenced the designs of similar telepresence videoconferencing systems from Cisco, HP, and Polycom. Our follow-up work on **Open Orchestra** (with HQP N. Bouillot, A. Olmos, T. Knight, M. Tomiyoshi), resulted in an immersive simulator for orchestral training, used by professional and semi-professional musicians [J20].

Meta Exhibit 1002
Meta v. Mullen - Page 00106

Academic Experience

May 2024–present	**McGill University, Montreal, QC** Werner Graupe Distinguished Chair in Automation Engineering
Oct 2023–present	**McGill University, Montreal, QC** Associate Member, Biomedical Engineering
Dec 2022–present	**McGill University, Montreal, QC** Member, McGill Institute for Aerospace Engineering
May 2022–present	**McGill University, Montreal, QC** Member, International Laboratory on Learning Systems
Jan 2018–present	**McGill University, Montreal, QC** Full Professor, Electrical and Computer Engineering. Director, Shared Reality Lab Associate Member, Faculty of Music, Department of Theory Founding Member, Centre for Interdisciplinary Research in Music, Media and Technology Member, Centre for Intelligent Machines
Feb 2022–present	**York University, Ontario** Affiliate Member, Vision: Science to Applications (VISTA)
Sep 2018–Jun 2019	**Technion–Israel Institute of Technology, Haifa, Israel** Visiting Professor, Industrial Engineering and Management
Sep 2018–Jun 2019	**IDC, Herzliya, Israel** Visiting Professor, Department of Computer Science
May 2003–Dec 2017	**McGill University, Montreal, QC** Associate Professor, Electrical and Computer Engineering
Aug 2011–Jul 2012	**University of Auckland, New Zealand** Invited Professor, Department of Computer Science
May–June 2009	**Bang & Olufsen, Denmark** Visiting Professor, World Opera Project
Jan 2009–present	**Bielefeld University, Germany** Virtual Member, Center of Excellence Cognitive Interaction Technology (CITEC)
Feb 2008	**Arizona State University** Visiting Scholar, School of Arts, Media and Engineering
Sep 2004–Aug 2005	**Université de Paris VI, Paris France** Invited Professor, Laboratoire des Instruments et Systemes d'Ile-de-France
Nov 1997–May 2003	**McGill University, Montreal, QC** Assistant Professor, Electrical and Computer Engineering.

Meta Exhibit 1002
Meta v. Mullen - Page 00107

Industrial and Consulting Experience

Sep 2019–Oct 2021	**RedPill Canada VR, Montreal** Director and Advisor
Apr–Jun 2019	**(Confidential project as consulting expert)** Providing expert report on topics concerning Human-Computer Interaction.
Aug–Nov 2014	**Menya Solutions and DRDC-Valcartier** Providing expert advice related to human-computer interfaces, visualization, and collaboration.
Aug 2012	**Tamaggo Inc.** Provide guidance and advice on digital imagery
May 2012	**York University** Review draft application to Canada Excellence Research Chairs program
May 2002 –Nov 2003	**Solicitor General of Canada** Media streaming configuration and user interface design.
May 2001	**National Research Council** Instructor of short course in Soft Computing, Institut des Materiaux Industriels.
Jan–Sep 1999	**Audio Engineering Society** Technical leader of demonstration of multichannel and multimedia audio distribution
Jan–Aug 1999	**Ontario Science Center** Scientific Director of Timescape Millenium Exhibit
Jul 1998	**Nortel** Instructor of short course in videoconferencing systems for the Nortel International SL-1 User's Association (ILUA), Long Beach
Sep 1996–Oct 1997	**Sony Computer Science Laboratory** Visiting Researcher, Sony Computer Science Laboratory, Tokyo, Japan. Developed speech-interface controlled VCR with visual tape database functionality. Wrote two patent applications, one filed.
Jun–Aug 1990	**Fibronics Research** Visiting Researcher, Fibronics Advanced Research Center, Haifa, Israel. Developed and tested an FDDI-to-token ring bridge.
May–Aug 1989	**IBM T.J. Watson Research Center** Research Intern, IBM T.J. Watson Research Center, Yorktown Heights, NY. Improved implementation of a VLIW architecture simulator.

Meta Exhibit 1002
Meta v. Mullen - Page 00108

Litigation and Expert Witness Experience

Parties I represented are marked by an asterisk.

Jan 2025–ongoing	**Earin AB v. Skullcandy, Inc.*** Case No. 1:24-cv-00275-RGA and related *Inter Partes* Review proceedings
Jan 2025–ongoing	**Mullen Industries LLC v. Meta Platforms, Inc.*** Case No. 1:24-cv-00354 (W.D. Tex.) and related *Inter Partes* Review proceedings of U.S. Patent Nos. 8,585,476, 9,662,582, 9,744,448, 10,179,277, 10,828,559, 10,974,151, 11,376,493, 11,904,243, 11,947,716, and 12,019,791
Jul–Oct 2024	**Haptix Solutions LLC v. Microsoft Corp.*** *Inter Partes* Review proceedings of U.S. Patent No. 8,253,686
Apr 2024–Jan 2025	**e-Vision Smart Optics* v. various parties** Litigation re U.S. Patent Nos. 8,708,483, 8,801,174, 8,905,541, 10,598,960, and 10,613,355
Jan–Apr 2024	**Immersion Corp. v. Valve Corp.*** Case No. 2-23-cv-00712 (W.D. Wash.) related to U.S. Patent Nos. 7,336,260, 8,749,507, 9,430,042, 9,116,546, 10,627,907, 10,665,067, and 11,175,738
Nov 2023–ongoing	**Sitnet LLC v. Meta Platforms, Inc.*** United States District Court, S.D. New York, Case No. 1:23-cv-6389 (AS) and related *Inter Partes* Review proceedings of U.S. Patent Nos. 8,249,932, 8,332,454, 9,877,345, and 11,470,682. Deposition testimony on expert report
Aug 2023–ongoing	**NEC Corporation* v. Peloton Interactive, Inc. et al.** United States District Court, District of Delaware, Case No. 1:2022cv00987 and related *Inter Partes* Review proceedings of U.S. Patent Nos. 9,769,427 and 8,752,101. Deposition testimony on expert reports (3 depositions)
Aug 2023–ongoing	**Resonant Systems, Inc. d/b/a RevelHMI v. Samsung Electronics Co., Ltd.* et al.** United States District Court, Eastern District of Texas, Case No. 2:22-cv-00423-JRG
May 2023–Dec 2024	**LoganTree LP v. Fossil Group, Inc.*** United States District Court, District of Delaware Case No. 1:21-cv-00385-JDW and related *Inter Partes* Review proceedings. Deposition testimony on expert reports (2 depositions)
Feb–May 2023	**Immersion Corp. v. Meta Platforms, Inc.*** United States District Court, Western District of Texas Case No. 6:22-cv-00541-ADA and related *Inter Partes* Review proceedings of U.S. Patent Nos. 8,469,806, 8,896,524, 9,727,217, 10,248,298, 10,269,222, and 10,664,143

Meta Exhibit 1002
Meta v. Mullen - Page 00109

Feb–May 2023	**Playvuu, Inc. v. Snap Inc.*** United States District Court, Central District of California Case No. 2:22-cv-06019. Involved in litigation matters related to U.S. Patent No. 10,931,911.
Sep 2022	**Apple* v. Taction Technologies, Inc.** Retained for *Reexamination Requests* of U.S. Patent Nos. 10,659,885 and 10,820,117 in the United States Patent and Trademark Office.
Aug 2022–Jun 2024	**Westwood One, LLC v. Local Radio Networks, LLC*** United States District Court, Northern District of Indiana, Case No. 1:21-cv-00088-HAB-SLC. Involved in litigation matters related to U.S. Patent Nos. 7,412,203 and 7,860,448
Jan–May 2022	**Peloton Interactive v. iFIT Inc. f/k/a ICON Health & Fitness*** United States District Court, District of Delaware, Civil Action No. 20-cv-1386-RGA. Prepared reports on patent invalidity and non-infringement.
Sep 2021–ongoing	**Brazos* v. Google** United States District Court, Western District of Texas Waco Division, Case Nos. 6:20-CV-00571-ADA through 6:20-CV-00585-ADA. Deposition testimony on expert reports (2 depositions)
Sep 2021–Aug 2022	**Allstate Insurance Co. v. Atos LLC*** Involved in *Inter Partes* Review, IPR2021-01118, of U.S. Patent No. 8,527,140, covering smartphone-based vehicle operation detection. Deposition testimony on expert report.
Jan 2021–Apr 2022	**GUI Global Products, Ltd. v. Apple*** United States District Court, Southern District of Texas, Case No. 4:20-cv-2652 and *Inter Partes* Review of U.S. Patent Nos. 10,259,020, 10,259,021, 10,562,077, and 10,589,320 in the United States Patent and Trademark Office. Deposition testimony on expert reports (2 depositions)
Dec 2020–Feb 2021	**Expert consultation re possible litigation in IT-related matter** Work done on behalf of Sheridan Ross P.C.
Nov 2020–Jun 2022	**Koss v. Apple*** United States District Court, Western District of Texas Civil Action No. 6:20-cv-00665. Involved in *Inter Partes* Review of U.S. Patent Nos. 10,206,025, 10,469,934, 10,506,325, 10,491,982, and 10,298,451 before the United States Patent and Trademark Office. Deposition testimony on expert reports (4 depositions).
Oct 2020–Oct 2021	**Triller v. ByteDance* and TikTok*** *Inter Partes* Review of U.S. Patent No. 9,691,429 before the United States Patent and Trademark Office. Deposition testimony on expert report.

Meta Exhibit 1002
Meta v. Mullen - Page 00110

Sep 2020–Jan 2023	**Content Square v. Quantum Metric*** **and Decibel Insight*** United States District Court, Massachusetts District Court, Case No. 1-20-cv-11184 and Delaware District Court, Case No. 20-cv-00832. Involved in invalidity arguments and petitions for *Inter Partes* Review. Deposition testimony on expert reports (5 depositions).
Sep 2020	**Wiesel v. Apple*** United States District Court, Eastern District of New York, Case No. 1:19-cv-7261. Engaged for source code review of products related to the Apple Watch (case presently stayed).
Aug–Oct 2020	**Finish Time* v. Garmin** United States District Court, District of Maine, Case No. 2:20-cv-00184. Involved in review of infringement arguments, discovery, related to fitness applications.
Dec 2019–Nov 2022	**Pinn v. Apple*** United States District Court, Central District of California, Case No. 8:19-cv1805, *Inter Partes* Review IPR2020-00999, Post Grant Review PGR2020-00066 and PGR2020-00073. Involved in preparation of expert witness declarations, code analysis involving multiple products related to earbuds and charging circuitry. Deposition testimony on expert reports, in-court trial testimony.
Oct 2019	**Qualcomm v. Apple*** *Inter Partes* Review, IPR2018-01279. Deposition testimony on expert witness declaration related to multimedia messaging.
Mar 2019–Feb 2022	**Cruz Hernandez* v. Air Canada and Lufthansa** Canadian Transportation Agency Case no. 20-01712, Petitioner before the Agency regarding passengers' rights to compensation under EC 261/2014
May 2018–May 2019	**Immersion Incorporated v. Samsung Inc.*** Civil Action No. 2:18-cv-00055 in the Eastern District of Texas and *Inter Partes* Review, IPR2018-01499. Consulted on technical details and involved in preparation of two expert witness declarations related to haptic feedback effects and force feedback in a multimodal system. (Patent Nos. 6,429,846, 7,969,288, 7,982,720, 8,031,181, 9,323,332 and 8,619,051)
May 2016–Nov 2017	**Cooperstock* v. Air Canada** Petitioner before the Canadian Transportation Agency. Brought successful complaint against Air Canada for the airline's making false or misleading statements to the public, Decision No. 105-C-A-2017 (otc-cta.gc.ca/eng/ruling/105-c-a-2017)
Jan–May 2014	**St. Lewis v. Rancourt*** Provided expert report on web server location, Ontario Superior Court File No. 11-51657

Meta Exhibit 1002
Meta v. Mullen - Page 00111

Mar–Sep 2013	**Cooperstock* v. United Airlines** Brought and argued successful appeal regarding anti-SLAPP legislation before the Quebec Court of Appeal, Decision 2013 QCCA 1670 (goo.gl/pgz301). Argued appeal in person (September 26, 2013)
Nov 2012–Aug 2017	**United Airlines v. Cooperstock*** Pro se litigant, Federal Court File No. T-2084-12. Deposition as litigant (August 2013) and testified at trial (December 2016).
Nov 2012–Jan 2017	**United Airlines v. Cooperstock*** Pro se litigant, Quebec Superior Court File No. 500-17-074743-124. Deposition as litigant (October 2014) and testified at trial (April 2016).
Sep 2012	**Lukács* v. Air Canada** Provided expert report on database query and execution times, Canadian Transportation Agency File No. M4120-3/11-06673, Decision No. 204-C-A-2013
May 2007–Jan 2008	**Market Maker c. Brim Solutions*** Provided expert witness report and in-court testimony (October 2007) on software-related intellectual property case. Quebec Superior Court File No. 500-17-036750-076.
Feb–Oct 2004	**Crawford Adjusters Canada** Provided analysis of artifacts in high definition video
Jul 2002–May 2016	**Court of Quebec, Small Claims Division** Brought 14 consumer rights complaints before the Court, 11 of which were successful

Meta Exhibit 1002
Meta v. Mullen - Page 00112

Research Dissemination

Notes on publication strategy: In my research field, papers in the ACM CHI (H5-index=87), UIST (H5-index=46), DIS (H5-index=33), and Mobile HCI (H5-index=28) conferences are considered to be top-tier, archival publications, competitive with the top HCI journals in terms of impact and visibility. Overall acceptance rates for these conferences are typically in the 20-25% range. As a measure of research impact, my publications have garnered ∼5800 *citations to date (Google Scholar) with more one third since 2019, an h-index of 39, and i10-index of 115. HQP under my supervision (names in bold) are typically given first authorship on co-authored work.*

Articles in Refereed Publications

[J1] **A. Talhan**, **Y. Yoo**, and J. R. Cooperstock. "Soft Pneumatic Haptic Wearable to Create the Illusion of Human Touch." In: *IEEE Transactions on Haptics* 17.2 (June 2024), pp. 177–190. DOI: 10.1109/TOH.2023.3305495. URL: https://ieeexplore.ieee.org/document/10219022.

[J2] **J. Regimbal**, **J. R. Blum**, **C. Kuo**, and J. R. Cooperstock. "IMAGE: An Open-Source, Extensible Framework for Deploying Accessible Audio and Haptic Renderings of Web Graphics." In: *ACM Transactions on Accessible Computing* (2024). DOI: 10.1145/3665223. URL: https://dl.acm.org/doi/10.1145/3665223.

[J3] **N. Duarte**, R. K. Arora, G. Bennett, M. Wang, M. P. Snyder, J. R. Cooperstock, and C. E. Wagner. "Deploying wearable sensors for pandemic mitigation: a counterfactual modelling study of Canada's second COVID-19 wave." In: *PLOS Digital Health* PDIG-D-22-00126R1 (Sept. 2022). DOI: 10.1371/journal.pdig.0000100. URL: https://journals.plos.org/digitalhealth/article?id=10.1371/journal.pdig.0000100.

[J4] **M. F. de Vargas**, **D. Marino**, **A. Weill–Duflos**, and J. R. Cooperstock. "Speaking Haptically: from Phonemes to Phrases with a Mobile Haptic Communication System." In: *Transactions on Haptics* 14.3 (July 2021), pp. 479–490. DOI: 10.1109/TOH.2021.3054812. URL: https://ieeexplore.ieee.org/document/9337220. Finalist, Best Applications Paper Award.

[J5] **P. Vyas**, **F. Al-Taha**, **J. R. Blum**, **A. Weill–Duflos**, and J. R. Cooperstock. "Ten Little Fingers, Ten Little Toes: Can Toes Match Fingers for Haptic Discrimination?" In: *Transactions on Haptics* 13.1 (2020). DOI: 10.1109/TOH.2020.2966969. URL: https://ieeexplore.ieee.org/document/8960637. Also presented at Haptics Symposium 2020.

[J6] **E. Sulmont**, E. Patitsas, and J. R. Cooperstock. "What Is Hard About Teaching Machine Learning to Non-Majors? Insights From Classifying Instructors' Learning Goals." In: *Transactions on Computing Education, Special Issue on Machine Learning Education* 19.4 (Aug. 2019). DOI: 10.1145/3336124. URL: http://dl.acm.org/authorize?N682238.

Meta Exhibit 1002
Meta v. Mullen - Page 00113

[J7] **J. Blum**, **P. Fortin**, **F. Al-Taha**, **P. Alirezaee**, **M. Demers**, **A. Weill–Duflos**, and J. R. Cooperstock. "Getting Your Hands Dirty Outside the Lab: A Practical Primer for Conducting Wearable Vibrotactile Haptics Research." In: *IEEE Transactions on Haptics, Special Issue on Wearable and Hand-held Haptics* 12.3 (July 2019), pp. 232–246. DOI: 10.1109/TOH.2019.2930608. URL: https://ieeexplore.ieee.org/document/8770138.

[J8] **G. Millet**, **M. Otis**, **D. Horodniczy**, and J. R. Cooperstock. "Design of Variable-Friction Devices for Shoe-Floor Contact." In: *Mechatronics* 46 (2017), pp. 115–125. DOI: 10.1016/j.mechatronics.2017.07.005. URL: https://www.sciencedirect.com/science/article/abs/pii/S0957415817301034.

[J9] **P. Fortin** and J. R. Cooperstock. "Laughter and Tickles: Toward Novel Approaches for Emotion and Behavior Elicitation." In: *IEEE Transactions on Affective Computing* 8.4 (2017). TAFFCSI-2016-07-0124.R1, pp. 508–521. DOI: 10.1109/TAFFC.2017.2757491. URL: http://ieeexplore.ieee.org/document/8052511/.

[J10] E. Aguilera, J. J. Lopez, and J. R. Cooperstock. "Spatial Audio for Audioconferencing in Mobile Devices: Investigating the Importance of Virtual Mobility and Private Communication and Optimizations." In: *Journal of the Audio Engineering Society* 64.5 (May 2016), pp. 332–341. DOI: 10.17743/jaes.2016.0009. URL: http://www.aes.org/e-lib/browse.cfm?elib=18138.

[J11] **D. El-Shimy** and J. R. Cooperstock. "User-Driven Techniques for the Design and Evaluation of New Musical Interfaces." In: *Computer Music Journal* 40.2 (2016), pp. 35–46. DOI: 10.1162/COMJ_a_00357. URL: http://www.mitpressjournals.org/doi/pdf/10.1162/COMJ_a_00357.

[J12] **F. Tordini**, A. Bregman, and J. R. Cooperstock. "Prioritizing foreground selection of natural chirp sounds by tempo and spectral centroid." In: *Multimodal User Interfaces, Special Issue on Auditory Display* 10.3 (Sept. 2016). Ed. by B. Katz and G. Marentakis, pp. 221–234. DOI: 10.1007/s12193-016-0223-x. URL: http://link.springer.com/article/10.1007%2Fs12193-016-0223-x.

[J13] R. F. Hess, **L. To**, J. Zhou, **G. Wang**, and J. Cooperstock. "3D Vision: the haves and havenots." In: *i-Perception* 6.3 (July 2015). DOI: 10.1177/2041669515593028. URL: http://ipe.sagepub.com/content/6/3/2041669515593028.full.pdf+html.

[J14] **N. Hieda** and J. R. Cooperstock. "Digital Facial Augmentation for Interactive Entertainment." In: *EAI Endorsed Transactions on e-Learning* 15.8 (Aug. 2015). DOI: 10.4108/icst.intetain.2015.259444. URL: https://eudl.eu/doi/10.4108/icst.intetain.2015.259444.

[J15] **J. Blum**, **A. Eichhorn**, **S. Smith**, **M. Sterle-Contala**, and J. R. Cooperstock. "Real-Time Emergency Response: Improved Management of Real-Time Information During Crisis Situations." In: *Multimodal User Interfaces* 8.2 (July 2014). JMUI-D-13-00047R3, pp. 161–173. DOI: 10.1007/s12193-013-0139-7. URL: https://link.springer.com/article/10.1007/s12193-013-0139-7.

[J16] **D. Dansereau**, N. Brock, and J. R. Cooperstock. "A Particle Filter for Predicting an Orchestral Conductor's Baton Movements." In: *Computer Music J.* 37.2 (Apr. 2013), pp. 28–45. URL: http://www.mitpressjournals.org/doi/pdf/10.1162/COMJ_a_00173.

Meta Exhibit 1002
Meta v. Mullen - Page 00114

[J17] **G. Cirio**, M. Marchal, A. Lécuyer, and J. R. Cooperstock. "Vibrotactile Rendering of Splashing Fluids." In: *Transactions on Haptics* 6.1 (May 2013), pp. 117–122. URL: http://ieeexplore.ieee.org/xpls/abs_all.jsp?arnumber=6226398. Best paper award.

[J18] F. Grond, **A. Olmos**, and J. Cooperstock. "Making Sculptures Audible through Participatory Sound Design (Artists' statement)." In: *Leonardo Music J.* 23 (Dec. 2013), pp. 12–13. DOI: doi:10.1162/LMJ_a_00140. URL: https://srl.mcgill.ca/publications/2013-LEONARDO.pdf.

[J19] **S. Pelletier** and J. R. Cooperstock. "Real-time free viewpoint video from a range sensor and color cameras." In: *Machine Vision and Applications* 24.4 (May 2013), pp. 739–751. URL: http://link.springer.com/article/10.1007%2Fs00138-012-0428-2.

[J20] **A. Olmos**, **N. Bouillot**, **T. Knight**, **N. Mabire**, **J.Redel**, and J. R. Cooperstock. "A High-Fidelity Orchestra Simulator for Individual Musicians' Practice." In: *Computer Music Journal* 36.2 (2012), pp. 55–73. URL: http://www.mitpressjournals.org/doi/pdf/10.1162/COMJ_a_00119.

[J21] J. M. Black, R. F. Hess, J. R. Cooperstock, **L. To**, and B. Thompson. "The measurement and treatment of suppression in amblyopia." In: *Visualized Experiments* 14.70 (Dec. 2012). DOI: 10.3791/3927. URL: http://www.jove.com/video/3927/the-measurement-and-treatment-of-suppression-in-amblyopia.

[J22] **D. El-Shimy**, F. Grond, **A. Olmos**, and J. R. Cooperstock. "Eyes-Free Environmental Awareness for Navigation." In: *Multimodal User Interfaces, Special Issue on Interactive Sonification* 5.3-4 (2012), pp. 131–141. DOI: 10.1007/s12193-011-0065-5. URL: http://www.springerlink.com/content/857h542884084ql2/.

[J23] B. L. Giordano, **Y. Visell**, H. Yao, V. Hayward, J. R. Cooperstock, and S. McAdams. "Identification of walked-upon materials in auditory, kinesthetic, haptic and audio-haptic conditions." In: *Acoustical Society of America* 131.5 (May 2012). URL: https://srl.mcgill.ca/publications/2012-JASA.pdf.

[J24] R. F. Hess, B. Thompson, J. M. Black, G. Maehara, P. Zhang, W. R. Bobier, **L. To**, and J. R. Cooperstock. "An iPod treatment for amblyopia: An updated binocular approach." In: *Optometry* 83.2 (Feb. 2012), pp. 87–94. URL: http://www.ncbi.nlm.nih.gov/pubmed/23231369.

[J25] **J. Blum**, **M. Bouchard**, and J. R. Cooperstock. "Spatialized audio environmental awareness for blind users with a smartphone." In: *Mobile Networks and Applications* 18.3 (Dec. 2012), pp. 295–309. DOI: 10.1007/s11036-012-0425-8. URL: https://srl.mcgill.ca/publications/2012-MONET.pdf.

[J26] **S. Pelletier** and J. R. Cooperstock. "Preconditioning for Edge-Preserving Image Super-Resolution." In: *IEEE Transactions on Image Processing* 21.1 (June 2012), pp. 67–79. URL: http://ieeexplore.ieee.org/stamp/stamp.jsp?tp=&arnumber=5898412.

[J27] **Z. Qi** and J. R. Cooperstock. "Toward Dynamic Image Mosaic Generation With Robustness to Parallax." In: *IEEE Transactions on Image Processing* 21.1 (Jan. 2012), pp. 366–378. URL: http://ieeexplore.ieee.org/stamp/stamp.jsp?tp=&arnumber=5959979.

Meta Exhibit 1002
Meta v. Mullen - Page 00115

[J28] J. R. Cooperstock. "Multimodal Telepresence Systems: Supporting Demanding Collaborative Human Activities." In: *IEEE Signal Processing* 28.1 (Jan. 2011). special issue on Immersive Communications, pp. 77–86. DOI: 10.1109/MSP.2010.939040.

[J29] **L. To**, B. Thompson, **J.R. Blum**, G. Maehara, R. Hess, and J. R. Cooperstock. "A game platform for treatment of amblyopia." In: *IEEE Transactions on Neural Systems and Rehabilitation Engineering* 19.3 (Feb. 2011), pp. 280–289. URL: http://ieeexplore.ieee.org/stamp/stamp.jsp?tp=&arnumber=5713843.

[J30] **Y. Visell**, B. Giordano, **G. Millet**, and J. R. Cooperstock. "Vibration Influences Haptic Perception of Surface Compliance During Walking." In: *PLoS ONE* 6.3:e17697 (Mar. 2011). DOI: doi:10.1371/journal.pone.0017697. URL: http://dx.plos.org/10.1371/journal.pone.0017697.

[J31] **R. Pellerin**, **N. Bouillot**, **T. Pietkiewicz**, M. Wozniewski, Z. Settel, E. Gressier-Soudan, and J. R. Cooperstock. "SoundPark: Exploring Ubiquitous Computing through a Mixed Reality Multi-player Game Experiment." In: *Studia Informatica Universalis* 8.3 (2010). Special Issue: Best Papers from NOTERE 2009, 21 pages. URL: https://srl.mcgill.ca/publications/2009-NOTERE.pdf.

[J32] R. H. Ellaway, D. Topps, K. Lachapelle, and J. R. Cooperstock. "Integrating Simulation Devices and Systems." In: *Studies in Health Technology and Informatics* 142 (Jan. 2009). Ed. by J. D. Westwood, S. W. Westwood, R. S. Haluck, H. M. Hoffman, G. T. Mogel, R. Phillips, R. A. Robb, and K. G. Vosburgh, pp. 88–90. URL: https://srl.mcgill.ca/publications/2009-MMVR-Ellaway.pdf.

[J33] **G. Wang**, L. Mercier, D. L. Collins, and J. R. Cooperstock. "A Comparative Study of Monoscopic and Stereoscopic Display for a Probe-Positioning Task." In: *Studies in Health Technology and Informatics* 142 (Jan. 2009). Ed. by J. D. Westwood, S. W. Westwood, R. S. Haluck, H. M. Hoffman, G. T. Mogel, R. Phillips, R. A. Robb, and K. G. Vosburgh, pp. 417–419. URL: https://srl.mcgill.ca/publications/2009-MMVR-Wang.pdf.

[J34] V. N. Salimpoor, **M. Benovoy**, G. Longo, J. R. Cooperstock, and R. J. Zatorre. "The Rewarding Aspects of Music Listening are Related to Degree of Emotional Arousal." In: *PLoS ONE* 4.10:e7487 (2009). DOI: 10.1371/journal.pone.0007487. URL: http://dx.plos.org/10.1371/journal.pone.0007487.

[J35] **Y. Visell**, **A. Law**, and J. R. Cooperstock. "Touch Is Everywhere: Floor Surfaces as Ambient Haptic Interfaces." In: *IEEE Transactions on Haptics* 2.3 (July 2009), pp. 148–159. DOI: 10.1109/TOH.2009.31. URL: http://ieeexplore.ieee.org/xpls/abs_all.jsp?arnumber=5166445.

[J36] **W. Sun** and J. R. Cooperstock. "An Empirical Evaluation of Factors Influencing Camera Calibration Accuracy Using Three Publicly Available Techniques." In: *Machine Vision and Applications Journal* 17.1 (Feb. 2006), pp. 51–67. DOI: 10.1007/s00138-006-0014-6. URL: http://www.springerlink.com/content/5824738r1w66v6wl/.

[J37] W. Woszczyk, J. R. Cooperstock, J. Roston, and W. Martens. "Shake, Rattle and Roll: Getting Immersed in Multisensory, Interactive Music via Broadband Networks." In: *Journal of the Audio Engineering Society* 53.4 (Apr. 2005), pp. 336–344. URL: http://www.aes.org/e-lib/browse.cfm?elib=13416.

Meta Exhibit 1002
Meta v. Mullen - Page 00116

[J38] **J. Yin** and J. R. Cooperstock. "Color Correction Methods with Applications to Digital Projection Environments." In: *Journal of Winter School of Computer Graphics* 12.3 (2004), pp. 499–506. URL: https://srl.mcgill.ca/publications/2004-WSCG-color.pdf.

[J39] L. R. Winer and J. R. Cooperstock. "The "Intelligent Classroom": Changing teaching and learning with an evolving technological environment." In: *Journal of Computers and Education* 38 (2002), pp. 253–266. URL: https://srl.mcgill.ca/publications/2002-CAE.pdf.

[J40] **A. Xu**, W. Woszczyk, Z. Settel, B. Pennycook, R. Rowe, P. Galanter, J. Bary, G. Martin, J. Corey, and J. R. Cooperstock. "Real-Time Streaming of Multichannel Audio Data over Internet." In: *Journal of the Audio Engineering Society* 48.7/8 (July 2000), pp. 627–641. URL: https://srl.mcgill.ca/publications/2000-JAES.pdf.

[J41] J. R. Cooperstock, S. S. Fels, W. Buxton, and K. C. Smith. "Reactive Environments: Throwing Away Your Keyboard and Mouse." In: *Communications of the ACM* 40.9 (Sept. 1997), pp. 65–73. URL: http://dl.acm.org/authorize?N06288.

[J42] J. R. Cooperstock and E. Milios. "Self-supervised learning for docking and target reaching." In: *Journal of Robotics and Autonomous Systems* 11 (1993), pp. 243–260. DOI: 10.1016/0921-8890(93)90029-C. URL: https://srl.mcgill.ca/publications/1993-JRAS.pdf.

Refereed Conference Publications

[C1] **D. Marino**, J. Dai, **P. Fortin**, **M. Henry**, and J. R. Cooperstock. "Co-Here: an expressive videconferencing module for implicit affective interaction." In: *Graphics Interface*. Halifax, NS: ACM, June 2024. URL: https://openreview.net/forum?id=L90yPA3fzE.

[C2] **E. Bouzekri**, P. Fortin, and J. R. Cooperstock. "ChatGPT, Tell Me More About Pilots' Opinion on Automation." In: *Cognitive and Computational Aspects of Situation Management (CogSIMA)*. Montreal, Canada: IEEE, May 2024. DOI: 10.1109/CogSIMA61085.2024.10553726. URL: https://ieeexplore.ieee.org/document/10553726.

[C3] **D. Marino**, **M. Henry**, **P. Fortin**, **R. Bhayana**, and J. R. Cooperstock. "I See What You're Hearing: Facilitating The Effect of Environment on Perceived Emotion While Teleconferencing." In: *Computer-Supported Cooperative Work and Social Computing*. Minneapolis, MN: ACM, Oct. 2023. DOI: 10.1145/3579495. URL: https://dl.acm.org/doi/10.1145/3579495.

[C4] **M. F. de Vargas**, **D. Marino**, **A. Weill–Duflos**, and J. R. Cooperstock. "Training to understand complex haptic phrases: a longitudinal investigation." In: *World Haptics Conference*. Delft, Netherlands: IEEE, July 2023. DOI: 10.1109/WHC56415.2023.10224492. URL: https://ieeexplore.ieee.org/document/10224492.

[C5] **H. Lee**, **R. Jiang**, **Y. Yoo**, **M. Henry**, and J. R. Cooperstock. "The Sound of Hallucinations: Toward a more convincing emulation of internalized voices." In: *Human Factors in Computing Systems (CHI)*. New Orleans, LA: ACM, Apr. 2022. DOI: 10.1145/3491102.3501871. URL: https://dl.acm.org/doi/10.1145/3491102.3501871. 🏅 Honorable Mention.

Meta Exhibit 1002
Meta v. Mullen - Page 00117

[C6] **J. Regimbal**, **J. R. Blum**, and J. R. Cooperstock. "IMAGE: A Deployment Framework for Creating Multimodal Experiences of Web Graphics." In: *Web4All 2022 - Accessibility in a Hybrid World*. virtual event, Apr. 2022. DOI: 10.1145/3493612.3520460. URL: https://dl.acm.org/doi/pdf/10.1145/3493612.3520460.

[C7] **P. Fortin** and J. R. Cooperstock. "Understanding Smartphone Notifications' Activity Disruption via In Situ Wrist Motion Monitoring." In: *Human Factors in Computing Systems (CHI), Late-Breaking Work (LBW) track*. New Orleans, LA: ACM, Apr. 2022. DOI: 10.1145/3491101.3519695. URL: https://dl.acm.org/doi/10.1145/3491101.3519695. acceptance rate: 36.1%.

[C8] **A. Rai**, **C. Ducher**, and J. R. Cooperstock. "Improved Attribute Manipulation in the Latent Space of StyleGAN for Semantic Face Editing." In: *International Conference on Machine Learning and Applications*. virtually online, Dec. 2021. DOI: 10.1109/ICMLA52953.2021.00014. URL: https://ieeexplore.ieee.org/document/9680017.

[C9] **D. Marino**, **M. F. de Vargas**, **A. Weill–Duflos**, and J. R. Cooperstock. "Conversing Using WhatsHap: a Phoneme Based Vibrotactile Messaging Platform." In: *World Haptics Conference*. Virtual Conference: IEEE, July 2021. DOI: 10.1109/WHC49131.2021.9517186. URL: https://ieeexplore.ieee.org/document/9517186. Acceptance rate: 55.7%.

[C10] **E. Waite**, **T. Fitz-Gerald**, **A. Sadaqa**, **Huaijin Shi**, **Pascal Fortin**, **A. Weill–Duflos**, and J. R. Cooperstock. "3D Printed Tactile Illusions and Demonstrations." In: *World Haptics Conference, Work in Progress Paper*. Virtual Conference: IEEE, July 2021. DOI: 10.1109/WHC49131.2021.9517237. URL: https://ieeexplore.ieee.org/document/9517237.

[C11] **M. Demers**, **P. Fortin**, **A. Weill–Duflos**, **Y. Yoo**, and J. R. Cooperstock. "Active Sampling for Efficient Subjective Evaluation of Tactons at Scale." In: *World Haptics Conference*. Virtual Conference: IEEE, July 2021. DOI: 10.1109/WHC49131.2021.9517257. URL: https://ieeexplore.ieee.org/document/9517257. Acceptance rate: 55.7%.

[C12] K. E. MacLean, V. Levesque, O. Schneider, P. Irani, A. Weill–Duflos, and J. R. Cooperstock. "CanHap 501: Learning Haptic UX Design in Remote Teams." In: *World Haptics Conference, Work in Progress Paper*. Virtual Conference: IEEE, July 2021. DOI: 10.1109/WHC49131.2021.9517152. URL: https://ieeexplore.ieee.org/document/9517152.

[C13] **N. J. A. Pollet**, **E. Uzan**, **P. B. Ruivo**, **T. Abravanel**, **A. Talhan**, **Y. Yoo**, and J. R. Cooperstock. "Multimodal Haptic Armrest for Immersive 4D Experiences." In: *World Haptics Conference, Work in Progress Paper*. Virtual Conference: IEEE, July 2021. DOI: 10.1109/WHC49131.2021.9517151. URL: https://ieeexplore.ieee.org/document/9517151.

[C14] **Y. Li**, **Y. Yoo**, **A. Weill–Duflos**, and J. R. Cooperstock. "Context-aware Automatic Haptic Effect Generation Algorithm for Improved Content Viewing Experience." In: *World Haptics Conference, Work in Progress Paper*. Virtual Conference: IEEE, July 2021. DOI: 10.1109/WHC49131.2021.9517148. URL: https://ieeexplore.ieee.org/document/9517148.

Meta Exhibit 1002
Meta v. Mullen - Page 00118

[C15] **Y. Li**, **Y. Yoo**, **A. Weill–Duflos**, and J. R. Cooperstock. "Towards Context-aware Automatic Haptic Effect Generation for Home Theatre Environments." In: *Virtual Reality Software and Technology*. Osaka, Japan: ACM, Dec. 2021. DOI: 10.1145/3489849.3489887. URL: https://dl.acm.org/doi/10.1145/3489849.3489887. Acceptance rate 26%.

[C16] **Y. Yoo**, **J. Regimbal**, and J. R. Cooperstock. "Identification and Information Transfer of Multidimensional Tactons Presented by a Single Vibrotactile Actuator." In: *World Haptics Conference*. Virtual Conference: IEEE, July 2021. DOI: 10.1109/WHC49131.2021.9517169. URL: https://ieeexplore.ieee.org/document/9517169. Acceptance rate: 55.7%.

[C17] **A. Weill–Duflos**, **P. Fortin**, **F. Al-Taha**, and J. R. Cooperstock. "Haptic Augmentation of Audio and its Effects on Speech Perception." In: *International Workshop on Haptic and Audio Interaction Design*. Montreal, Canada, June 2020. URL: https://hal.archives-ouvertes.fr/hal-02901210.

[C18] A. Farooq, H. Tan, **A. Weill–Duflos**, J. R. Cooperstock, and R. Raisamo. "Embedded Haptic Waveguides to Improve Tactile Feedback: Designing a Custom 3D-Printed Surface to Enhance Signal Mediation." In: *Sensors*. Oct. 2020. DOI: 10.1109/SENSORS47125.2020.9278770. URL: https://ieeexplore.ieee.org/document/9278770.

[C19] M. Gellert, N. Katzman, J. P. Klein, A. Frenkel, M. Klein, J. R. Cooperstock, J. J. Schlesinger, and Y. Bitan. "Comparing auditory and tactile cues to inform clinicians of patients' vital signs." In: *Annual Meeting of the Human Factors and Ergonomics Society*. Chicago, IL, USA, Oct. 2020. DOI: 10.1177/2327857920091015. URL: https://journals.sagepub.com/doi/abs/10.1177/2327857920091015.

[C20] **J. R. Blum**, J. Cauchard, and J. R. Cooperstock. "Habituation to Pseudo-Ambient Vibrotactile Patterns for Remote Awareness." In: *Haptics Symposium*. Washington DC, USA: IEEE, Mar. 2020. DOI: 10.1109/HAPTICS45997.2020.ras.HAP20.153.550dbcba. URL: https://ieeexplore.ieee.org/document/9086336/. Acceptance rate: 38%.

[C21] **J. Regimbal**, **N. Radi**, **A. Weill–Duflos**, and J. R. Cooperstock. "Single-Actuator Simultaneous Haptic Rendering for Multiple Vital Signs." In: *HCI International*. Copenhagen, Denmark, July 2020. DOI: 10.1007/978-3-030-60117-1_19. URL: https://dl.acm.org/doi/10.1007/978-3-030-60117-1_19.

[C22] **P. Alirezaee**, **A. Weill–Duflos**, J. Schlesinger, and J. R. Cooperstock. "Exploring the Effectiveness of Haptic Alarm Displays for Critical Care Environments." In: *Haptics Symposium*. Washington DC, USA: IEEE, Mar. 2020. DOI: 10.1109/HAPTICS45997.2020.ras.HAP20.156.6c3cc0bf. URL: https://ieeexplore.ieee.org/document/9086328. Acceptance rate: 38%.

[C23] **P. Fortin**, **J. Blum**, **A. Weill–Duflos**, and J. R. Cooperstock. "Contact Force Estimation from Raw Photoplethysmogram Signal." In: *Sensors*. Oct. 2020. DOI: 10.1109/SENSORS47125.2020.9278658. URL: https://ieeexplore.ieee.org/document/9278658.

Meta Exhibit 1002
Meta v. Mullen - Page 00119

[C24] **P. Vyas**, **F. Al-Taha**, **J. R. Blum**, **A. Weill–Duflos**, and J. R. Cooperstock. "Ten Little Fingers, Ten Little Toes: Can Toes Match Fingers for Haptic Discrimination?" In: *Haptics Symposium (also appears in Transactions on Haptics)*. Washington DC, USA: IEEE, Mar. 2020. DOI: 10.1109/TOH.2020.2966969. URL: https://ieeexplore.ieee.org/document/8960637. Acceptance rate: 38%.

[C25] **P. Vyas**, **F. Al-Taha**, **J. R. Blum**, and J. R. Cooperstock. "HapToes: Vibrotactile Numeric Information Delivery via Tactile Toe Display." In: *Haptics Symposium*. Washington DC, USA: IEEE, Mar. 2020. DOI: 10.1109/HAPTICS45997.2020.ras.HAP20.34.8ad689d4. URL: https://ieeexplore.ieee.org/document/9086321. Acceptance rate: 38%.

[C26] **A. Weill–Duflos**, **F. Al-Taha**, **P. Fortin**, and J. R. Cooperstock. "BarryWhaptics: Towards Countering Social Biases Using Real-Time Haptic Enhancement of Voice." In: *World Haptics Conference*. Tokyo, Japan, June 2019. DOI: 10.1109/WHC.2019.8816153. URL: https://ieeexplore.ieee.org/document/8816153. Acceptance rate: 46%.

[C27] **E. Sulmont**, E. Patitsas, and J. R. Cooperstock. "Can You Teach Me To Machine Learn?" In: *Special Interest Group on Computer Science Education Technical Symposium*. Minneapolis, MN, Feb. 2019. DOI: 10.1145/3287324.3287392. URL: http://dl.acm.org/authorize?N682231.

[C28] **G. Yin**, M. Otis, **P. Fortin**, and J. R. Cooperstock. "Evaluating Multimodal Feedback for Accomplishing Assembly Tasks in a Virtual Environment." In: *Engineering Interactive Computing Systems*. Valencia, Spain: ACM SIGCHI, June 2019. DOI: 10.1145/3331163. URL: http://dl.acm.org/authorize?N682239.

[C29] **J. Blum** and J. R. Cooperstock. "Single-Actuator Vibrotactile Numeric Information Delivery in the Face of Distraction." In: *World Haptics Conference*. Tokyo, Japan, June 2019. DOI: 10.1109/WHC.2019.8816082. URL: https://ieeexplore.ieee.org/document/8816082. Acceptance rate: 46%.

[C30] N. Katzman, M. Gellert, J. J. Schlesinger, T. Oron-Gilad, J. R. Cooperstock, and Y. Bitan. "Evaluation of tactile cues for simulated patients' status under high and low workload." In: *International Meeting*. Seattle, WA, USA: Human Factors and Ergonomics Society (HFES), Oct. 2019. DOI: 10.1177/1071181319631285. URL: https://journals.sagepub.com/doi/10.1177/1071181319631285.

[C31] **M. F. de Vargas**, **A. Weill–Duflos**, and J. R. Cooperstock. "Haptic Speech Communication Using Stimuli Evocative of Phoneme Production." In: *World Haptics Conference*. Tokyo, Japan, June 2019. DOI: 10.1109/WHC.2019.8816145. URL: https://ieeexplore.ieee.org/document/8816145. Acceptance rate: 46%.

[C32] **P. Alirezaee**, J. Schlesinger, and J. R. Cooperstock. "Ergonomic Haptic Displays - Reducing Clinician Dependence on Patient Monitors and Auditory Alarms." In: *Human Factors and Ergonomics in Healthcare Symposium*. Chicago, IL, USA, Mar. 2019.

[C33] **P. Fortin**, **D. Huang**, and J. R. Cooperstock. "Exploring the Use of Fingerprint Sensor Gestures for Unlock Journaling: A Comparison with Slide-to-X." In: *Mobile HCI*. Taipei, Taiwan: ACM, Oct. 2019. DOI: 10.1145/3338286.3340135. URL: http://dl.acm.org/authorize?N684389.

Meta Exhibit 1002
Meta v. Mullen - Page 00120

[C34] **P. Fortin**, **E. Sulmont**, and J. R. Cooperstock. "Detecting Perception of Smartphone Notifications using Skin Conductance Responses." In: *Human Factors in Computing (CHI)*. Glasgow, Scotland: ACM, Apr. 2019. DOI: 10.1145/3290605.3300420. URL: http://dl.acm.org/authorize?N682230. 🏆 Honorable mention.

[C35] **J. Anlauff**, **T. Kim**, and J. R. Cooperstock. "Feel-a-Bump: Haptic Feedback for Foot-based Angular Menu Selection." In: *Haptics Symposium*. San Francisco, CA: IEEE, Mar. 2018. DOI: 10.1109/HAPTICS.2018.8357172. URL: https://ieeexplore.ieee.org/stamp/stamp.jsp?arnumber=8357172. Acceptance rate: 44%.

[C36] **J. Blum**, J. R. Cooperstock, and J. Cauchard. "Pseudo-Ambience: Filling the Gap Between Notifications and Continuous Information Displays." In: *UbiTtention Workshop on Smart & Ambient Notification and Attention Management*. Singapore: ACM, Oct. 2018. DOI: 10.1145/3267305.3274111. URL: http://dl.acm.org/authorize?N682234.

[C37] **P. Fortin**, **E. Sulmont**, and J. R. Cooperstock. "SweatSponse: Closing the Loop on Notification Delivery Using Skin Conductance Responses." In: *User Interface Software and Technology (UIST)*. Berlin, Germany: ACM, Oct. 2018. DOI: 10.1145/3266037.3266084. URL: http://dl.acm.org/authorize?N682232.

[C38] **T. Kim**, **H. Ju**, and J. R. Cooperstock. "Pressure or Movement? Usability of Multi-Functional Foot-Based Interfaces." In: *Designing Interactive Systems (DIS)*. Hong Kong: ACM, June 2018. DOI: 10.1145/3196709.3196759. URL: http://dl.acm.org/authorize?N682246. Acceptance rate: 23%.

[C39] E. Cupellini, J. R. Cooperstock, and M. Olivetti. "The Sound Motion Controller: a distributed system for interactive music performance." In: *Conference of the European Society for the Cognitive Sciences of Music*. Ghent, Belgium, July 2017. URL: https://iris.uniroma1.it/bitstream/11573/1023094/2/Cupellini_Sound-motion_2017.pdf.

[C40] **D. Horodniczy** and J. R. Cooperstock. "Free the Hands! Enhanced Target Selection via a Variable-Friction Shoe." In: *Human Factors in Computing Systems (CHI)*. Denver, CO, May 2017. DOI: 10.1145/3025453.3025625. URL: http://dl.acm.org/authorize?N682249. Acceptance rate: 25%.

[C41] D. M. Gay-Betton, **P. Alirezaee**, J. R. Cooperstock, and J. J. Schlesinger. "HAPTIC – Haptic Anatomical Positioning To Improve Clinical Monitoring." In: *Design & Semantics of Form & Movement (DeSForM)*. Delft-Eindhoven, Netherlands, Oct. 2017. DOI: 10.5772/intechopen.71111. URL: https://www.intechopen.com/books/proceedings-of-the-conference-on-design-and-semantics-of-form-and-movement-sense-and-sensitivity-desform-2017/haptic-haptic-anatomical-positioning-to-improve-clinical-monitoring.

[C42] **J. Anlauff**, J. Fung, and J. R. Cooperstock. "VibeWalk – Foot-Based Tactons During Walking and Quiet Stance." In: *World Haptics Conference*. Munich, Germany, June 2017. DOI: 10.1109/WHC.2017.7989977. URL: https://ieeexplore.ieee.org/document/7989977/. Acceptance rate: 59%.

Meta Exhibit 1002
Meta v. Mullen - Page 00121

[C43] **M. Diaz**, **R. Girgis**, T. Fevans, and J. R. Cooperstock. "To Veer or Not to Veer: Learning How to Stay Within the Crosswalk from Experts." In: *International Workshop on Assistive Computer Vision and Robotics*. Venice, Italy: IEEE, Oct. 2017. DOI: 10.1109/ICCVW.2017.174. URL: https://ieeexplore.ieee.org/document/8265384.

[C44] **P. Alirezaee**, **R. Girgis**, **T. Kim**, J. Schlesinger, and J. R. Cooperstock. "Did you feel that? Developing Novel Multimodal Alarms for High Consequence Clinical Environments." In: *International Conference on Auditory Displays*. Happy Valley, PA, USA, June 2017, pp. 175–181. URL: https://smartech.gatech.edu/handle/1853/58377.

[C45] **J. Blum** and J. R. Cooperstock. "Expressing Human State via Parameterized Haptic Feedback for Mobile Remote Implicit Communication." In: *Augmented Human*. Geneva, Switzerland: ACM, Feb. 2016. DOI: 10.1145/2875194.2875225. URL: http://dl.acm.org/authorize?N682240.

[C46] **N. Hieda**, **J. Anlauff**, **S. Smith**, **Y. Visell**, and J. R. Cooperstock. "An Intelligent Floor Surface for Foot-based Exploration of Geospatial Data." In: *International Workshop on Multimedia Signal Processing*. Montreal, Canada, Sept. 2016.

[C47] **D. El-Shimy** and J. R. Cooperstock. "EmbodiNet: Enriching Distributed Musical Collaboration through Embodied Interactions." In: *IFIP TC13 Conference on Human-Computer Interaction (INTERACT)*. Bamberg, Germany, Sept. 2015. DOI: 10.1007/978-3-319-22668-2_1. URL: https://link.springer.com/chapter/10.1007/978-3-319-22668-2_1.

[C48] **F. Tordini**, A. Bregman, and J. R. Cooperstock. "The loud bird doesn't (always) get the worm: Why computational salience also needs brightness and tempo." In: *International Conference on Auditory Displays*. Graz, Austria, July 2015. URL: https://smartech.gatech.edu/handle/1853/54145.

[C49] **J. Blum**, I. Frissen, and J. R. Cooperstock. "Improving Haptic Feedback on Wearable Devices through Accelerometer Measurements." In: *User Interface Software and Technology*. Charlotte, NC: ACM, Nov. 2015. DOI: 10.1145/2807442.2807474. URL: http://dl.acm.org/authorize?N682241. Acceptance rate: 21%.

[C50] **N. Hieda** and J. R. Cooperstock. "Digital Facial Augmentation for Interactive Entertainment." In: *International Conference on Intelligent Technologies for Interactive Entertainment*. Turin, Italy, June 2015. URL: https://ieeexplore.ieee.org/document/7325479.

[C51] **N. Hieda** and J. R. Cooperstock. "sharedFace: Interactive Facial Projection Mapping." In: *International Conference and Exhibition of Virtual Technologies and Uses*. Laval, France, Apr. 2015. DOI: 10.1145/2806173.2806188. URL: http://dl.acm.org/authorize?N682242.

[C52] **V. Vuibert**, W. Stuerzlinger, and J. R. Cooperstock. "Evaluation of docking task performance using mid-air interaction techniques." In: *Symposium on Spatial User Interaction*. Los Angeles, CA: ACM, Aug. 2015. DOI: 10.1145/2788940.2788950. URL: http://dl.acm.org/authorize?N06271.

Meta Exhibit 1002
Meta v. Mullen - Page 00122

[C53] P. Fortin, M. Otis, V. Duchaine, and J. R. Cooperstock. "Event-based haptic vibration synthesis using a recursive filter for lower limb prosthetics." In: *International Symposium on Haptic, Audio and Visual Environments and Games (HAVE)*. Dallas, TX, Oct. 2014. DOI: 10.1109/HAVE.2014.6954330. URL: https://ieeexplore.ieee.org/document/6954330.

[C54] **M. Xie** and J. R. Cooperstock. "Heterogeneous Sensor Data Fusion: How Many Cameras Are Needed For An Accurate 3D Reconstruction of Large Scene?" In: *Seventh International Symposium on Computational Intelligence and Design (ISCID)*. Hangzhou, China, Dec. 2014. DOI: 10.1109/ISCID.2014.285. URL: https://ieeexplore.ieee.org/document/7082043.

[C55] **M. Xie** and J. R. Cooperstock. "Time-of-Flight Camera Calibration for Improved 3D Reconstruction of Indoor Scenes." In: *Seventh International Symposium on Computational Intelligence and Design (ISCID)*. Hangzhou, China, Dec. 2014. DOI: 10.1109/ISCID.2014.283. URL: https://ieeexplore.ieee.org/document/7082034.

[C56] **D. El-Shimy** and J. R. Cooperstock. "Reactive Environment for Network Music Performance." In: *New Interfaces for Musical Expression (NIME)*. Daejoen, South Korea, May 2013.

[C57] **F. Tordini**, A. Bregman, A. Ankolekar, T. E. Sandholm, and J. R. Cooperstock. "Toward an improved model of auditory saliency." In: *International Conference on Auditory Displays*. Lodz, Poland, July 2013. URL: https://srl.mcgill.ca/publications/2013-ICAD-FT.pdf.

[C58] **F. Tordini**, A. Bregman, A. Ankolekar, T. E. Sandholm, and J. R. Cooperstock. "Your attention, please! Determining saliency of competing audio stimuli in natural scenarios." In: *Meetings on Acoustics – International Congress on Acoustics*. Vol. 19. Montreal, QC: Acoustical Society of America, June 2013, pp. 189–196. URL: http://asadl.org/poma/resource/1/pmarcw/v19/i1/p010031_s1?bypassSSO=1.

[C59] **J. Anlauff**, J. Fung, and J. R. Cooperstock. "Augmented Feedback for Learning Single-Legged Stance on a Slackline." In: *International Conference on Virtual Rehabilitation*. Philadelphia, PA, Aug. 2013.

[C60] **M. Otis**, **G. Millet**, and J. R. Cooperstock. "Vibration-Induced Friction Control for Walkway Locomotion Interface." In: *Systems, Man, and Cybernetics, Part SMC: Human-Machine*. Manchester, UK: IEEE, Oct. 2013, 6 pgs. URL: http://ieeexplore.ieee.org/xpl/articleDetails.jsp?reload=true&arnumber=6722429.

[C61] **S. Panëels**, **A. Olmos**, **J. Blum**, and J. R. Cooperstock. "Listen to It Yourself! Evaluating Usability of "What's Around Me?" for the Blind." In: *Human Factors in Computing Systems (CHI)*. Paris, France: ACM, Apr. 2013. URL: http://dl.acm.org/authorize?N06272. Acceptance rate: 20%.

[C62] **S. Panëels**, **D. Varenne**, **J. Blum**, and J. R. Cooperstock. "The Walking Straight Mobile Application: Helping the Visually Impaired Avoid Veering." In: *International Conference on Auditory Displays*. Lodz, Poland, July 2013, pp. 25–32. URL: https://srl.mcgill.ca/publications/2013-ICAD-WS.pdf. Best use of sound.

Meta Exhibit 1002
Meta v. Mullen - Page 00123

[C63] **D. El-Shimy**, T. Hermann, and J. R. Cooperstock. "A Reactive Environment for Dynamic Volume Control." In: *New Interfaces for Musical Expression (NIME)*. Ann Arbor, Michigan, May 2012. URL: https://srl.mcgill.ca/publications/2012-NIME.pdf.

[C64] **J. Blum**, **D. Greencorn**, and J. R. Cooperstock. "Smartphone sensor reliability for augmented reality applications." In: *Mobile and Ubiquitous Systems (Mobiquitous)*. Lecture Notes of the Institute for Computer Sciences, Social Informatics and Telecommunications Engineering. Beijing, China: Springer, Dec. 2012. URL: https://srl.mcgill.ca/publications/2012-MOBIQUITOUS.pdf.

[C65] K. Kim, J. Bolton, A. Girouard, J. Cooperstock, and R. Vertegaal. "TeleHuman: Effects of 3D Perspective on Gaze and Pose Estimation with a Life-size Cylindrical Telepresence Pod." In: *Human Factors in Computing Systems (CHI)*. Austin, Texas: ACM Press/Addison-Wesley Publishing Co., May 2012, pp. 2531–2540. URL: http://dl.acm.org/authorize?N06274. Acceptance rate: 23%.

[C66] **T. Knight**, **N. Bouillot**, and J. R. Cooperstock. "Visualization feedback for musical ensemble practice: A case study on phrase articulation and dynamics." In: *Visualization and Data Analysis*. IS&T/SPIE Symposium on Electronic Imaging, Jan. 2012, 9 pgs. URL: https://srl.mcgill.ca/publications/2012-VDA.pdf.

[C67] **A. Olmos**, P. Rushka, D. Ko, G. Foote, W. Woszczyk, and J. R. Cooperstock. "Where do you want your ears? Comparing performance quality as a function of listening position in a virtual jazz band." In: *Sound, Music and Computing*. July 2011, 6 pgs. URL: https://srl.mcgill.ca/publications/2011-SMC.pdf.

[C68] F. Bérard, **G. Wang**, and J. R. Cooperstock. "On the Limits of the Human Motor Control Precision: the Search for a Device's Human Resolution." In: *IFIP TC13 Conference on Human-Computer Interaction (INTERACT)*. Lisbon, Portugal, Sept. 2011, pp. 107–122. URL: https://srl.mcgill.ca/publications/2011-INTERACT.pdf.

[C69] **G. Millet**, **M. Otis**, **G. Chaw**, and J. R. Cooperstock. "Initial Development of a Variable-Friction Floor Surface." In: *Canadian Medical and Biological Engineering Conference*. Festival of International Conferences on Caregiving, Disability, Aging and Technology, June 2011, 4 pgs.

[C70] **G. Wang**, M. McGuffin, F. Bérard, and J. R. Cooperstock. "Pop-up Depth Views for Improving 3D Target Acquisition." In: *Graphics Interface*. St. John's, NL, May 2011, pp. 41–48.

[C71] **I. Garcia-Dorado** and J. R. Cooperstock. "Automatic multi-projector calibration with an uncalibrated camera." In: *International Workshop on Projector-Camera Systems*. Colorado Springs: IEEE, June 2011, pp. 29–36.

[C72] **J. Blum**, **H. Sun**, **A. Olmos**, and J. R. Cooperstock. "End-User Viewpoint Control of Live Video from a Medical Camera Array." In: *International Conference on Distributed Smart Cameras*. Ghent, Belgium, Aug. 2011, pp. 1–6. URL: https://srl.mcgill.ca/publications/2011-ICDSC.pdf.

Meta Exhibit 1002
Meta v. Mullen - Page 00124

[C73] **J. Blum**, **M. Bouchard**, and J. R. Cooperstock. "What's around me? Spatialized audio augmented reality for blind users with a smartphone." In: *Mobile and Ubiquitous Systems (Mobiquitous)*. Lecture Notes of the Institute for Computer Sciences, Social Informatics and Telecommunications Engineering. Copenhagen, Denmark: Springer, Dec. 2011. URL: https://srl.mcgill.ca/publications/2011-MOBIQUITOUS.pdf. Best paper award.

[C74] **J. Ip** and J. R. Cooperstock. "To Virtualize or Not? The Importance of Physical and Virtual Components in Augmented Reality Board Games." In: *International Conference on Entertainment Computing*. Vancouver, BC, Canada: Springer-Verlag, Oct. 2011.

[C75] **M. Otis**, **G. Millet**, **S. Beniak**, and J. R. Cooperstock. "Modeling of Lower Limbs for Vibrotactile Compensation." In: *Canadian Medical and Biological Engineering Conference*. Festival of International Conferences on Caregiving, Disability, Aging and Technology, June 2011, 4 pgs.

[C76] **N. Bouillot**, **M. Tomiyoshi**, and J. R. Cooperstock. "Extended User Control over Multichannel Content Delivered over the Web." In: *Conference on Audio Networking*. San Diego: Audio Engineering Society, Nov. 2011, 5 pgs. URL: https://srl.mcgill.ca/publications/2011-AES.pdf.

[C77] **A. Olmos**, K. Lachapelle, and J. R. Cooperstock. "Multiple Angle Viewer for Remote Medical Training." In: *International Workshop on Multimedia Technologies for Distance Leaning*. Firenze, Italy: ACM, Oct. 2010, pp. 19–24. ISBN: 978-1-4503-0158-9. DOI: 10.1145/1878052.1878058. URL: http://dl.acm.org/authorize?N06285.

[C78] R. Ellaway, J. R. Cooperstock, and B. Spencer. "Simulation Integration for Healthcare Education, Training and Assessment." In: *Fifth International Conference on Digital Information Management*. Thunder Bay, ON, Canada, July 2010, pp. 484–489. URL: https://srl.mcgill.ca/publications/2010-DIM.pdf.

[C79] **M. Benovoy** and J. R. Cooperstock. "Psychophysiological signal analysis and classification." In: *CHI 2010 Brain Body and Bytes Workshop*. Atlanta, GA, USA, Apr. 2010, pp. 75–78. URL: https://srl.mcgill.ca/publications/2010-BRAIN-BODY-BYTES.pdf.

[C80] **R. Rajalingham**, **Y. Visell**, and J. R. Cooperstock. "Probabilistic Tracking of Pedestrian Movements via In-Floor Force Sensing." In: *Seventh Canadian Conference on Computer and Robot Vision (CRV)*. Ottawa, ON, Canada, May 2010, pp. 143–150. DOI: 10.1109/CRV.2010.26. URL: https://srl.mcgill.ca/publications/2010-CRV.pdf.

[C81] **Y. Visell**, **A. Law**, **J. Ip**, **S. Smith**, and J. R. Cooperstock. "Interaction Capture in Immersive Virtual Environments via an Intelligent Floor Surface." In: *IEEE Virtual Reality (VR)*. Waltham, MA, USA, Mar. 2010, pp. 313–314. DOI: 10.1109/VR.2010.5444748. URL: https://srl.mcgill.ca/publications/2010-VR.pdf.

[C82] **Y. Visell** and J. R. Cooperstock. "Design of a Vibrotactile Display via a Rigid Surface." In: *Haptics Symposium*. Waltham, MA, USA: IEEE, Mar. 2010, pp. 133–140. DOI: 10.1109/HAPTIC.2010.5444664. URL: https://srl.mcgill.ca/publications/2010-HAPTICS-SYMPOSIUM.pdf. Best paper award.

Meta Exhibit 1002
Meta v. Mullen - Page 00125

[C83] **Y. Visell**, **S. Smith**, **A. Law**, **R. Rajalingham**, and J. R. Cooperstock. "Contact Sensing and Interaction Techniques for a Distributed, Multimodal Floor Display." In: *IEEE 3D User Interfaces (3DUI)*. Waltham, MA, USA, Mar. 2010, pp. 75–78. DOI: 10.1109/3DUI.2010.5444718. URL: https://srl.mcgill.ca/publications/2010-3DUI.pdf.

[C84] **A. Law**, **J. Ip**, **B. Peck**, **Y. Visell**, P. Kry, and J. R. Cooperstock. "Multimodal floor for immersive environments." In: *SIGGRAPH Emerging Technologies*. New Orleans, LA, USA: ACM, Aug. 2009, 16:1. DOI: 10.1145/1597956.1597972. URL: http://dl.acm.org/authorize?N06286.

[C85] **A. Olmos**, **M. Brulé**, **N. Bouillot**, **M. Benovoy**, **J. Blum**, **H. Sun**, N. W. Lund, and J. R. Cooperstock. "Exploring the role of latency and orchestra placement on the networked performance of a distributed opera." In: *12th Annual International Workshop on Presence*. Los Angeles, CA, USA, Nov. 2009, 9 pgs. URL: https://srl.mcgill.ca/publications/2009-PRESENCE.pdf.

[C86] F. Bérard, **J. Ip**, **M. Benovoy**, **D. El-Shimy**, **J. Blum**, and J. R. Cooperstock. "Did 'Minority Report' Get it Wrong? Superiority of the Mouse over 3D Input Devices for a 3D Placement Task." In: *IFIP TC13 Conference on Human-Computer Interaction (INTERACT)*. Uppsala, Sweden, Aug. 2009, pp. 400–414. URL: https://srl.mcgill.ca/publications/2009-INTERACT.pdf.

[C87] J. R. Cooperstock and **G. Wang**. "Stereoscopic Display Technologies, Interaction Paradigms and Rendering Approaches for Neurosurgical Visualization." In: *Stereoscopic Displays and Applications*. San Jose, CA, USA, Jan. 2009, 11 pgs. URL: https://srl.mcgill.ca/publications/2009-SDA.pdf.

[C88] **D. El-Shimy**, G. Marentakis, and J. R. Cooperstock. "Multimodal Feedback in 3D Target Acquisition." In: *IEEE 3D User Interfaces (3DUI)*. Lafayette, LA, USA, Mar. 2009, pp. 95–98. URL: https://srl.mcgill.ca/publications/2009-3DUI.pdf.

[C89] **J. Anlauff**, T. Hermann, T. Grosshauser, and J. R. Cooperstock. "Modular tacTiles for Sonic Interactions with Smart Environments." In: *Haptic and Audio Interaction Design (HAID), Fourth International Workshop*. Dresden, Germany, Sept. 2009, pp. 100–108. URL: https://srl.mcgill.ca/publications/2009-HAID.pdf.

[C90] **N. Bouillot** and J. R. Cooperstock. "Challenges and Performance of High-Fidelity Audio Streaming for Interactive Performances." In: *New Interfaces for Musical Expression (NIME)*. Pittsburgh, PA, USA, June 2009, pp. 135–140. URL: https://srl.mcgill.ca/publications/2009-NIME.pdf.

[C91] **N. Bouillot**, **M. Brulé**, and J. R. Cooperstock. "Performance metrics for network audio systems: Methodology and a preliminary comparison." In: *Audio Engineering Society 127th Convention*. New York, NY, USA, Oct. 2009. URL: http://www.aes.org/e-lib/browse.cfm?elib=15134.

[C92] **R. Pellerin**, **N. Bouillot**, **T. Pietkiewicz**, M. Wozniewski, Z. Settel, E. Gressier-Soudan, and J. R. Cooperstock. "SoundPark: Exploring Ubiquitous Computing through a Mixed Reality Multi-player Game Experiment." In: *9e Conférence Internationale sur Les NOuvelles TEchnologies de la REpartition*. Montreal, QC, Canada, July 2009, 9 pgs. URL: https://srl.mcgill.ca/publications/2009-NOTERE.pdf. Best paper award.

Meta Exhibit 1002
Meta v. Mullen - Page 00126

[C93] **R. Pellerin**, **N. Bouillot**, **T. Pietkiewicz**, M. Wozniewski, Z. Settel, E. Gressier-Soudan, and J. R. Cooperstock. "SoundPark: Towards Highly Collaborative Game Support in a Ubiquitous Computing Architecture." In: *9th IFIP International Conference on Distributed Applications and Interoperable Systems*. Lisbon, Portugal, June 2009, pp. 22–45. URL: https://srl.mcgill.ca/publications/2009-DAIS.pdf.

[C94] V. N. Salimpoor, **M. Benovoy**, G. G. Longo, K. Larcher, A. Dagher, J. R. Cooperstock, and R. J. Zatorre. "The Rewarding Aspects of Music Listening Involve the Dopaminergic Striatal Reward Systems of the Brain: An Investigation with [C11]Raclopride PET and fMRI." In: *15th Annual Meeting of the Organization for Human Brain Mapping*. San Francisco, CA, USA, June 2009.

[C95] Z. Settel, M. Wozniewski, **N. Bouillot**, and J. R. Cooperstock. "Audio Graffiti: A location based audio-tagging and remixing environment." In: *International Computer Music Conference*. Montreal, QC, Canada, Aug. 2009. URL: https://srl.mcgill.ca/publications/2009-ICMC.pdf.

[C96] **Y. Visell**, **A. W. Law**, and J. R. Cooperstock. "Toward Iconic Vibrotactile Information Display Using Floor Surfaces." In: *Third Joint Eurohaptics Conference and Symposium on Haptic Interfaces for Virtual Environment and Teleoperator Systems*. Salt Lake City, UT, USA, Mar. 2009, pp. 267–272. URL: https://srl.mcgill.ca/publications/2009-WHC.pdf.

[C97] **A. Law W.**, **B. Peck V.**, **Y. Visell**, P. Kry, and J. R. Cooperstock. "A Multi-modal Floor-space for Experiencing Material Deformation Underfoot in Virtual Reality." In: *International Workshop on Haptic Audio Visual Environments and Games*. Ottawa, ON, Canada: IEEE, Oct. 2008. URL: https://srl.mcgill.ca/publications/2008-HAVE.pdf.

[C98] **E. Cupellini**, **C. Rizzuti**, E. Bilotta, P. Pantano, **M. Wozniewski**, and J. R. Cooperstock. "Exploring Musical Mappings and Generating Accompaniment with Chaotic Systems." In: *International Computer Music Conference*. Belfast, UK, Aug. 2008. URL: https://srl.mcgill.ca/publications/2008-ICMC.pdf.

[C99] B. L. Giordano, S. McAdams, **Y. Visell**, J. R. Cooperstock, H. Yao, and V. Hayward. "Non-visual identification of walking grounds." In: *Acoustics'08*. Vol. 123. 5. Paris, France, June 2008, p. 3412. URL: https://srl.mcgill.ca/publications/2008-ACOUSTICS.pdf.

[C100] **M. Benovoy**, J. Deitcher, and J. R. Cooperstock. "Biosignals Analysis and its Application in a Performance Setting: Towards the development of an Emotional-Imaging Generator." In: *IEEE International Conference on Bio-Inspired Systems and Signal Processing (BIOSIGNALS)*. Madeira, Portugal, Jan. 2008. URL: https://srl.mcgill.ca/publications/2008-BIOSIGNALS.pdf.

[C101] **M. Benovoy**, M. Zadel, R. Absar, M. Wozniewski, and J. R. Cooperstock. "Towards immersive multimodal gameplay." In: *GAMEON-NA*. Montreal, QC, Canada, Aug. 2008. URL: https://srl.mcgill.ca/publications/2008-GAMEON.pdf.

Meta Exhibit 1002
Meta v. Mullen - Page 00127

[C102] **M. Wozniewski**, **N. Bouillot**, Z. Settel, and J. R. Cooperstock. "An Augmented Reality Framework for Wireless Mobile Performance." In: *5th International Mobile Music Workshop*. Vienna, Austria, May 2008. URL: https://srl.mcgill.ca/publications/2008-MMW.pdf.

[C103] **M. Wozniewski**, **N. Bouillot**, Z. Settel, and J. R. Cooperstock. "Large-Scale Mobile Audio Environments for Collaborative Musical Interaction." In: *New Interfaces for Musical Expression (NIME)*. Genova, Italy, June 2008. URL: https://srl.mcgill.ca/publications/2008-NIME-Wozniewski.pdf.

[C104] **N. Bouillot**, **M. Wozniewski**, Z. Settel, and J. R. Cooperstock. "A Mobile Wireless Augmented Guitar." In: *New Interfaces for Musical Expression (NIME)*. Genova, Italy, June 2008. URL: https://srl.mcgill.ca/publications/2008-NIME-Bouillot.pdf.

[C105] **S. Pelletier** and J. R. Cooperstock. "Fast image restoration with the Huber-Markov prior model." In: *International Conference on Image Processing*. San Diego, CA, USA, Oct. 2008. URL: https://srl.mcgill.ca/publications/2008-ICIP.pdf.

[C106] V. N. Salimpoor, **M. Benovoy**, G. Longo, J. R. Cooperstock, and R. J. Zatorre. "Music and the Reward System: Characterizing Intensely Pleasurable Responses to Music." In: *The Neurosciences and Music – III*. Montreal, QC, Canada, June 2008.

[C107] **Y. Visell**, B. Giordano, J. R. Cooperstock, K. Franinovic, **A. Law**, S. McAdams, **K. Jathal**, and F. Fontana. "A Vibrotactile Device for Display of Virtual Ground Materials in Walking." In: *EuroHaptics*. Madrid, Spain, June 2008. URL: https://srl.mcgill.ca/publications/2008-EUROHAPTICS.pdf.

[C108] **Z. Qi** and J. R. Cooperstock. "Depth-based Image Mosaicing for Both Static and Dynamic Scenes." In: *International Conference on Pattern Recognition (ICPR)*. Tampa, FL, USA, Dec. 2008. URL: https://srl.mcgill.ca/publications/2008-ICPR.pdf.

[C109] J. R. Cooperstock, **M. Wozniewski**, and Z. Settel. "Towards mobile spatial audio for distributed musical systems and multi-user virtual environments." In: *Spatial Audio for Mobile Devices, Workshop in conjunction with International Conference on Human Interaction with Mobile Devices and Services (MobileHCI)*. Singapore, Sept. 2007. URL: https://srl.mcgill.ca/publications/2007-SAMD.pdf.

[C110] Y. Kinoe and J. R. Cooperstock. "Peripheral Telecommunications: Supporting Distributed Awareness and Seamless Transitions to the Foreground." In: *International Conference on Smart Homes and Health Telematics (ICOST)*. Nara, Japan, June 2007. URL: https://srl.mcgill.ca/publications/2007-ICOST.pdf.

[C111] **M. Wozniewski**, Z. Settel, and J. R. Cooperstock. "AudioScape: A Pure Data library for management of virtual environments and spatial audio." In: *PureData Convention*. Montreal, QC, Canada, Aug. 2007. URL: https://srl.mcgill.ca/publications/2007-PDCONV.pdf.

[C112] **M. Wozniewski**, Z. Settel, and J. R. Cooperstock. "User-specific audio rendering and steerable sound for distributed virtual environments." In: *International Conference on Auditory Display*. Montreal, QC, Canada, June 2007. URL: https://srl.mcgill.ca/publications/2007-ICAD-Wozniewski.pdf.

Meta Exhibit 1002
Meta v. Mullen - Page 00128

[C113] J. Roston, C. Bradley, and J. R. Cooperstock. "Underwater Window: High Definition Video on VENUS and NEPTUNE." In: *Oceans '07*. Vancouver, BC, Canada, Sept. 2007, pp. 1–8. DOI: 10.1109/OCEANS.2007.4449327. URL: http://ieeexplore.ieee.org/xpls/abs_all.jsp?arnumber=4449327.

[C114] **S. Audet** and J. R. Cooperstock. "Shadow Removal in Front Projection Environments using Object Tracking." In: *IEEE Projector-Camera Systems (ProCams)*. Minneapolis, MN, USA, June 2007. URL: https://srl.mcgill.ca/publications/2007-PROCAMS.pdf.

[C115] **S. Pelletier** and J. R. Cooperstock. "Fast super-resolution for rational magnification factors." In: *International Conference on Image Processing (ICIP)*. San Antonio, TX, USA, Sept. 2007. URL: https://srl.mcgill.ca/publications/2007-ICIP.pdf.

[C116] **Y. Visell** and J. R. Cooperstock. "Enabling Gestural Interaction by Means of Tracking Dynamical Systems Models and Assistive Feedback." In: *IEEE Systems, Man and Cybernetics*. Montreal, QC, Canada, Oct. 2007. URL: https://srl.mcgill.ca/publications/2007-SMC.pdf.

[C117] **Y. Visell** and J. R. Cooperstock. "Modeling and Continuous Sonification of Affordances for Gesture-Based Interfaces." In: *International Conference on Auditory Display*. Montreal, QC, Canada, June 2007. URL: https://srl.mcgill.ca/publications/2007-ICAD-Visell.pdf.

[C118] **Y. Visell**, J. R. Cooperstock, and K. Franinovic. "Toward an Architectural Platform for Audio-Haptic Simulation in Walking." In: *Enactive Interfaces (ENACTIVE'07)*. Grenoble, France, Nov. 2007. URL: https://srl.mcgill.ca/publications/2007-ENACTIVE.pdf.

[C119] **Z. Qi** and J. R. Cooperstock. "Automated Change Detection in an Undersea Environment using a Statistical Background Model." In: *Oceans '07*. Vancouver, BC, Canada, Sept. 2007, pp. 1–6. DOI: 10.1109/OCEANS.2007.4449201. URL: https://srl.mcgill.ca/publications/2007-OCEANS.pdf.

[C120] **Z. Qi** and J. R. Cooperstock. "Overcoming Parallax and Sampling Density Issues in Image Mosaicing of Non-Planar Scenes." In: *British Machine Vision Conference (BMVC)*. Warwick, UK, Sept. 2007. URL: https://srl.mcgill.ca/publications/2007-BMVC.pdf.

[C121] **F. Cayouette** and J. R. Cooperstock. "Generic Real-Time Tracking Method on Semi-Dynamic Scenes." In: *International Conference on Pattern Recognition (ICPR)*. Hong Kong, Aug. 2006, pp. 711–714. DOI: 10.1109/ICPR.2006.602. URL: http://ieeexplore.ieee.org/xpls/abs_all.jsp?arnumber=1698991. Acceptance rate: 54%.

[C122] **F. Rudzicz**. "Clavius: bi-directional parsing for generic multimodal interaction." In: *Proceedings of the 21st International Conference on computational Linguistics and 44th Annual Meeting of the Association for Computational Linguistics: Student Research Workshop*. COLING ACL '06. Sydney, Australia: Association for Computational Linguistics, 2006, pp. 85–90. URL: http://portal.acm.org/citation.cfm?id=1557856.1557875.

[C123] **F. Rudzicz**. "Put a grammar here: bi-directional parsing in multimodal interaction." In: *Human Factors in Computing Systems (CHI), Extended Abstracts*. Montreal: ACM, 2006, pp. 1277–1282. ISBN: 1-59593-298-4. DOI: http://doi.acm.org/10.1145/1125451.1125689. URL: http://doi.acm.org/10.1145/1125451.1125689. Acceptance rate: 24%.

Meta Exhibit 1002
Meta v. Mullen - Page 00129

[C124] **M. Wozniewski**, Z. Settel, and J. R. Cooperstock. "A framework for immersive spatial audio performance." In: *New Interfaces for Musical Expression (NIME)*. Paris, France, June 2006. URL: https://srl.mcgill.ca/publications/2006-NIME.pdf.

[C125] **M. Wozniewski**, Z. Settel, and J. R. Cooperstock. "A Paradigm for Physical Interaction with Sound in 3-D Audio Space." In: *International Computer Music Conference*. New Orleans, LA, USA, Nov. 2006. URL: https://srl.mcgill.ca/publications/2006-ICMC.pdf.

[C126] **M. Wozniewski**, Z. Settel, and J. R. Cooperstock. "A Spatial Interface for Audio and Music Production." In: *International Conference on Digital Audio Effects (DAFx)*. Montreal, QC, Canada, Sept. 2006. URL: https://srl.mcgill.ca/publications/2006-DAFX.pdf.

[C127] **S. Arseneau** and J. R. Cooperstock. "An Asymmetrical Diffusion Framework for Junction Analysis." In: *British Machine Vision Conference (BMVC)*. Edinburgh, UK, Sept. 2006. URL: https://srl.mcgill.ca/publications/2006-BMVC-Arseneau.pdf.

[C128] **S. Arseneau** and J. R. Cooperstock. "An Improved Representation of Junctions through Asymmetric Tensor Diffusion." In: *International Symposium on Visual Computing*. Lake Tahoe, NV, USA, Nov. 2006. URL: https://srl.mcgill.ca/publications/2006-ISVC.pdf.

[C129] **S. Pelletier** and J. R. Cooperstock. "Preconditioning for temporal video superresolution." In: *British Machine Vision Conference (BMVC)*. Edinburgh, UK, Sept. 2006. URL: https://srl.mcgill.ca/publications/2006-BMVC-Pelletier.pdf.

[C130] **Z. Qi** and J. R. Cooperstock. "Wide-Baseline Image Mosaicing for Indoor Environments." In: *International Conference on Pattern Recognition (ICPR)*. Hong Kong, Aug. 2006. URL: https://srl.mcgill.ca/publications/2006-ICPR.pdf.

[C131] J. R. Cooperstock. "Interacting in Shared Reality." In: *HCI International, Conference on Human-Computer Interaction*. Las Vegas, NV, USA, July 2005. URL: https://srl.mcgill.ca/publications/2005-HCI.pdf.

[C132] **J. Yin** and J. R. Cooperstock. "A New Photo Consistency Test for Voxel Coloring." In: *Canadian Conference on Computer and Robot Vision*. Victoria, BC, Canada: IEEE Computer Society, May 2005, pp. 566–570. DOI: 10.1109/CRV.2005.9. URL: http://ieeexplore.ieee.org/xpls/abs_all.jsp?arnumber=1443180.

[C133] **S. Pelletier**, **S. Spackman**, and J. R. Cooperstock. "High-Resolution Video Synthesis from Mixed-Resolution Video Based on the Estimate-and-Correct Method." In: *IEEE Workshop on Applications of Computer Vision (WACV)*. Breckenridge, CO, USA, Jan. 2005. URL: https://srl.mcgill.ca/publications/2005-WACV-Pelletier.pdf.

[C134] **W. Sun** and J. R. Cooperstock. "Requirements for Camera Calibration: Must Accuracy Come with a High Price?" In: *IEEE Workshop on Applications of Computer Vision (WACV)*. Breckenridge, CO, USA, Jan. 2005. URL: https://srl.mcgill.ca/publications/2005-WACV-Sun.pdf.

[C135] J. R. Cooperstock, J. Roston, and W. Woszczyk. "Broadband Networked Audio: Entering the Era of Multisensory Data Distribution." In: *18th International Congress on Acoustics*. Kyoto, Japan, Apr. 2004. URL: https://srl.mcgill.ca/publications/2004-ICA.pdf.

Meta Exhibit 1002
Meta v. Mullen - Page 00130

[C136] **F. Rioux**, **F. Rudzicz**, and **M. Wozniewski**. "The Modellers' Apprentice – The Toolglass Metaphor in an Immersive Environment." In: *British HCI Group Annual Conference*. Leeds, UK, Sept. 2004.

[C137] **J. Yin** and J. R. Cooperstock. "Improving Depth Maps by Nonlinear Diffusion." In: *12th International Conference on Computer Graphics, Visualization and Computer Vision*. Plzen, Czech Republic, Feb. 2004, pp. 305–311. URL: https://srl.mcgill.ca/publications/2004-WSCG-diffusion.pdf.

[C138] **M. Hilario** and J. R. Cooperstock. "Occlusion Detection for Front-Projected Interactive Displays." In: *Advances in Pervasive Computing*. Vol. 176. Vienna, Austria: Austrian Computer Society (OCG), Apr. 2004, pp. 265–271. ISBN: 3-85403-176-9. URL: https://srl.mcgill.ca/publications/2004-PERVASIVE.pdf.

[C139] J. Usher, J. R. Cooperstock, W. Woszczyk, and J. R. Cooperstock. "A multi-filter approach to acoustic echo cancellation for teleconferencing." In: *75th Meeting of the Acoustical Society of America*. New York, May 2004.

[C140] W. Woszczyk, J. R. Cooperstock, J. Roston, and W. Martens. "Environment for immersive multi-sensory communication of music using broadband networks." In: *23rd Tonmeistertagung VDT International Audio Convention*. Leipzig, Germany, Nov. 2004. URL: https://srl.mcgill.ca/publications/2004-TONMEISTER.pdf.

[C141] **Y. Boussemart**, **F. Rioux**, **F. Rudzicz**, **M. Wozniewski**, and J. R. Cooperstock. "A Framework for Collaborative 3D Visualization and Manipulation in an Immersive Space using an Untethered Bimanual Gestural Interface." In: *VRST '04: Proceedings of the ACM Symposium on Virtual Reality Software and Technology*. Hong Kong: ACM Press, Nov. 2004, pp. 162–165. ISBN: 1-58113-907-1. DOI: http://doi.acm.org/10.1145/1077534.1077566. URL: http://dl.acm.org/authorize?N06287.

[C142] J. R. Cooperstock. "Intelligent Classrooms need Intelligent Interfaces: How to Build a High-Tech Teaching Environment that Teachers can use?" In: *American Society for Engineering Education*. Nashville, TN, USA, June 2003. URL: https://srl.mcgill.ca/publications/2003-ASEE.pdf.

[C143] E. Cohen, J. R. Cooperstock, and C. Kyriakakis. "The Challenges of Archiving Networked Based Multimedia Performances." In: *Journal of the Acoustical Society of America*. Vol. 112. 5. Cancun, Mexico, Nov. 2002, p. 2280. URL: http://link.aip.org/link/?JAS/112/2280/1.

[C144] **J. Yao** and J. R. Cooperstock. "Arm Gesture Detection in a Classroom Environment." In: *IEEE Workshop on Applications of Computer Vision (WACV)*. Orlando, FL, USA, Dec. 2002, pp. 153–157. URL: https://srl.mcgill.ca/publications/2002-WACV.pdf.

[C145] **S. Arseneau** and J. R. Cooperstock. "Automated Feature Registration for Robust Tracking Methods." In: *IEEE International Conference on Pattern Recognition (ICPR)*. Vol. 2. Quebec City, QC, Canada, Aug. 2002, pp. 1078–1081. DOI: 10.1109/ICPR.2002.1048492. URL: http://doi.ieeecomputersociety.org/10.1109/ICPR.2002.1048492.

Meta Exhibit 1002
Meta v. Mullen - Page 00131

[C146] J. R. Cooperstock. "The Classroom of the Future: Enhancing Education through Augmented Reality." In: *HCI International, Conference on Human-Computer Interaction*. New Orleans, LA, USA, 2001, pp. 688–692. URL: https://srl.mcgill.ca/publications/2001-HCI.pdf.

[C147] J. R. Cooperstock and **S. Spackman**. "The Recording Studio that Spanned a Continent." In: *IEEE International Conference on Web Delivering of Music (WEDELMUSIC)*. Florence, Italy, Nov. 2001, pp. 161–167. DOI: 10.1109/WDM.2001.990172. URL: https://srl.mcgill.ca/publications/2001-WEDELMUSIC.pdf.

[C148] L. Winer and J. R. Cooperstock. "The "Intelligent Classroom": Changing teaching and learning with an evolving technological environment." In: *Computers and Learning*. Coventry, UK, Apr. 2001.

[C149] **A. Xu** and J. R. Cooperstock. "Real Time Streaming of Multi-Channel Audio Data over Internet." In: *108th Audio Engineering Society Convention*. Paris, France, 2000, 14 pgs. URL: https://srl.mcgill.ca/publications/2000-AES.pdf.

[C150] **L. Hochstein**, **S. Lerner**, J. J. Clark, and J. R. Cooperstock. "Soccer-Swarm: A Graphical Framework for Soccer-Player Design." In: *International Symposium on Robotics*. Montreal, QC, Canada, May 2000, pp. 108–113. URL: https://srl.mcgill.ca/publications/2000-ISR.pdf.

[C151] **S. Arseneau**, **W. Sun**, **C. Zhao**, and J. R. Cooperstock. "Inter-layer Learning Towards Emergent Cooperative Behavior." In: *17th Annual Conference on Artificial Intelligence, American Association of Artificial Intelligence*. Austin, TX, USA, 2000, pp. 3–8. URL: https://srl.mcgill.ca/publications/2000-AAAI.pdf.

[C152] J. Blatter, J. R. Cooperstock, and R. Harris. "Designing Tools, Designing Learning Opportunities: Issues in Developing a CSCL System for the Technical Communication Classroom." In: *Computer Supported Cooperative Learning Conference*. Stanford, CA, USA, Dec. 1999. URL: https://srl.mcgill.ca/publications/1999-CSCL.pdf.

[C153] **S. Arseneau** and J. R. Cooperstock. "Presenter Tracking in a Classroom Environment." In: *IEEE Industrial Electronics (IECON'99), Session on Cooperative Environments*. Vol. 1. San Jose, CA, USA, Nov. 1999, pp. 145–148. URL: https://srl.mcgill.ca/publications/1999-IECON.pdf.

[C154] **S. Arseneau** and J. R. Cooperstock. "Real-Time Image Segmentation for Action Recognition." In: *IEEE Pacific Rim Conference on Communications, Computers and Signal Processing (PACRIM'99)*. Victoria, BC, Canada, Aug. 1999, pp. 86–89. DOI: 10.1109/PACRIM.1999.799484. URL: https://srl.mcgill.ca/publications/1999-PACRIM.pdf.

[C155] J. R. Cooperstock. "From the Flashing 12:00 to a Usable Machine: Applying UbiComp to the VCR." In: *Human Factors in Computing Systems (CHI), Extended Abstracts*. Atlanta, GA, USA, Mar. 1997, pp. 281–282. URL: http://dl.acm.org/authorize?N06289. Acceptance rate: 24%.

[C156] J. R. Cooperstock and S. Kotsopoulos. "Why Use a Fishing Line When You Have a Net? An Adaptive Multicast Data Distribution Protocol." In: *USENIX*. San Diego, CA, USA, 1996, pp. 343–352. URL: https://srl.mcgill.ca/publications/1996-USENIX.pdf.

Meta Exhibit 1002
Meta v. Mullen - Page 00132

[C157] K. Yamaashi, J. R. Cooperstock, T. Narine, and W. Buxton. "Beating the Limitations of Camera-Monitor Mediated Telepresence with Extra Eyes." In: *Human Factors in Computing Systems (CHI)*. Vancouver, BC, Canada, May 1996, pp. 50–57. URL: http://dl.acm.org/authorize?N06280. Acceptance rate: 21%.

[C158] A. Chou, J. R. Cooperstock, R. El-Yaniv, M. Klugerman, and T. Leighton. "The Statistical Adversary Allows Optimal Money-Making Trading Strategies." In: *ACM-SIAM Symposium on Discrete Algorithms (SODA)*. San Francisco, CA, USA, Jan. 1995, pp. 467–476. URL: https://srl.mcgill.ca/publications/1995-SODA.pdf.

[C159] J. R. Cooperstock. "Making the User Interface Disappear: The Reactive Room." In: *IBM Center for Advanced Studies (CASCON)*. Toronto, ON, Canada, 1995, pp. 241–250. URL: http://portal.acm.org/citation.cfm?id=781915.781930.

[C160] J. R. Cooperstock and S. Kotsopoulos. "Exploiting Group Communications for Reliable High Volume Data Distribution." In: *IEEE Pacific Rim Conference on Communications, Computers, Visualization and Signal Processing (PACRIM)*. Victoria, BC, Canada, May 1995. URL: https://srl.mcgill.ca/publications/1995-PACRIM-AFDP.pdf.

[C161] J. R. Cooperstock, K. Tanikoshi, G. Beirne, T. Narine, and W. Buxton. "Evolution of a Reactive Environment." In: *Human Factors in Computing Systems (CHI)*. Denver, CO, USA, May 1995, pp. 170–177. URL: https://dl.acm.org/citation.cfm?id=223926. Acceptance rate: 29%.

[C162] J. R. Cooperstock, K. Tanikoshi, and W. Buxton. "Turning Your Video Monitor into a Virtual Window." In: *IEEE Pacific Rim Conference on Communications, Computers, Visualization and Signal Processing (PACRIM)*. Victoria, BC, Canada, May 1995. URL: https://srl.mcgill.ca/publications/1995-PACRIM-HT.pdf.

[C163] A. Gujar, S. Daya, J. R. Cooperstock, K. Tanikoshi, and W. Buxton. "Talking Your Way Around a Conference: A speech interface for remote equipment control." In: *IBM Center for Advanced Studies (CASCON)*. Toronto, ON, Canada, 1995, p. 289. URL: http://portal.acm.org/citation.cfm?id=781915.781941.

[C164] J. K. Tsotsos, S. Dickinson, M. Jenkin, E. Milios, A. Jepson, B. Down, E. Amdur, S. Stevenson, M. Black, D. Metaxas, J. R. Cooperstock, S. Culhane, F. Nuflo, G. Verghese, W. Wai, D. Wilkes, and Y. Ye. "The PLAYBOT Project." In: *IJCAI Workshop on AI Applications for Disabled People*. Montreal, QC, Canada, Aug. 1995.

[C165] J. R. Cooperstock and E. Milios. "An Efficiently Trainable Neural Network Based Vision-Guided Robot Arm." In: *IEEE Robotics and Automation*. Vol. 2. Atlanta, GA, USA, May 1993, pp. 738–743. DOI: 10.1109/ROBOT.1993.291946. URL: http://ieeexplore.ieee.org/xpls/abs_all.jsp?arnumber=291946.

[C166] J. R. Cooperstock and E. Milios. "Self-Supervised Learning for Docking and Target Reaching." In: *Intelligent Autonomous Systems*. Pittsburgh, 1993, pp. 582–591.

[C167] J. R. Cooperstock and E. Milios. "Adaptive Neural Networks for Vision-Guided Position Control of a Robot Arm." In: *IEEE Intelligent Control*. Glasgow, UK, 1992, pp. 397–403. DOI: 10.1109/ISIC.1992.225124. URL: http://ieeexplore.ieee.org/xpls/abs_all.jsp?arnumber=225124.

Meta Exhibit 1002
Meta v. Mullen - Page 00133

[C168] J. R. Cooperstock and E. Milios. "Neural Network Control for a Vision-Guided Mobile Robot Arm." In: *IASTED Control and Robotics*. Vancouver, BC, Canada, 1992, pp. 278–281.

Refereed Conference Publications (Posters)

[CP1] **J. Regimbal** and J. R. Cooperstock. "Investigating Haptic Co-Creation with Reinforcement Learning." In: *Eurohaptics*. Lille, France: IEEE, 2024. 🏆 Best Poster Award.

[CP2] **J. Regimbal**, **E. Wilson**, and J. R. Cooperstock. "See What You Feel: Visualizing Static Haptic Scenes." In: *Eurohaptics*. in press. Lille, France: IEEE, 2024.

[CP3] D. Hsueh, **Y. Liu**, **M.F. De Vargas**, **R. Bazin**, K. Moffatt, and J. R. Cooperstock. "AI-Digital Nurse Avatar (ADiNA)." In: *AGE-WELL AgeTech Innovation Week Conference*. Toronto, Ontario, Oct. 2023.

[CP4] **J. Lane-Smith**, D. Chow, S. Ajami, and J. R. Cooperstock. "The Hapstrument: A Bimanual Haptic Interface for Musical Expression." In: *New Interfaces for Musical Expression (NIME)*. Mexico City, Mexico, May 2023. DOI: 10.5281/zenodo.11189284. URL: https://nime.org/proceedings/2023/nime2023_77.pdf.

[CP5] **M. F. de Vargas**, **D. Marino**, **A. Weill–Duflos**, and J. R. Cooperstock. "Speaking Haptically: from Phonemes to Phrases with a Mobile Haptic Communication System." In: *World Haptics Conference*. Virtual Conference: IEEE, July 2021.

[CP6] J. Cooperstock and **J.R. Blum**. "Touch me like it matters: exploring location and encodings for explicit and implicit communication." In: *Haptics Symposium, Interactive Session associated with the Cross-Cutting Challenge on Using the Skin as a Medium of Communication*. Washington, DC, Mar. 2020.

[CP7] N. Katzman, M. Gellert, T. Oron-Gilad, J. R. Cooperstock, Y. Bitan, and J. J. Schlesinger. "Wearable haptic devices to monitor soldiers' physiology–discreet sensory input improves safety and monitoring in hostile low-light and high-noise conditions." In: *Military Health System Research Symposium*. Department of Defense, 2020. URL: https://mhsrs.health.mil/SitePages/Home.aspx.

[CP8] **P. Fortin**, **J. Blum**, and J. R. Cooperstock. "Towards Consistent Haptic Coupling with HaptiStrap: Doing Better than "Tight yet Comfortable"." In: *User Interface Software and Technology (UIST)*. New Orleans, USA: ACM, Oct. 2019. DOI: 10.1145/3332167.3357118. URL: https://dl.acm.org/doi/10.1145/3332167.3357118. Acceptance rate: 48.8%.

[CP9] **F. Al-Taha**, **P. Fortin**, **A. Weill–Duflos**, and J. R. Cooperstock. "Reversing Voice-Related Biases Through Haptic Feedback." In: *User Interface Software and Technology (UIST)*. Berlin, Germany: ACM, Oct. 2018. DOI: 10.1145/3266037.3266101. URL: http://dl.acm.org/authorize?N682233.

[CP10] **F. Tordini**, A. Bregman, and J. R. Cooperstock. "Effects of global brightness on salience and auditory foreground perception." In: *Speech in Noise Workshop*. Glasgow, Scotland, Jan. 2018. URL: https://spin2018.eu/?p=program&id=66.

Meta Exhibit 1002
Meta v. Mullen - Page 00134

[CP11] **J. Blum** and J. R. Cooperstock. "Exploring the Limits of Vibrotactile Numeric Information Delivery." In: *Ubicomp*. Singapore: ACM, Oct. 2018. DOI: 10.1145/3267305.3267658. URL: http://dl.acm.org/authorize?N682245.

[CP12] **T. Kim** and J. R. Cooperstock. "Enhanced Pressure-Based Multimodal Immersive Experiences." In: *Augmented Human*. Seoul, Korea: ACM, Feb. 2018. DOI: 10.1145/3174910.3174928. URL: http://dl.acm.org/authorize?N682247. Best poster presentation award, Acceptance rate: 34%.

[CP13] **P. Fortin**, **J. Blum**, and J. R. Cooperstock. "Raising the Heat: Electrical Muscle Stimulation for Simulated Heat Withdrawal Response." In: *User Interface Software and Technology (UIST)*. Quebec City, Canada: ACM, Oct. 2017. DOI: 10.1145/3131785.3131828. URL: http://dl.acm.org/authorize?N682248. Acceptance rate: 23%.

[CP14] **J. Anlauff**, J. Fung, and J. R. Cooperstock. "Modular Haptic Belt for Augmented Balance Feedback." In: *International Society for Posture and Gait Research*. Seville, Spain, June 2015.

[CP15] **D. El-Shimy** and J. R. Cooperstock. "EmbodiComp: Embodied Interaction for Mixing and Composition." In: *Sound and Music Computing Conference (ICMC — SMC)*. Athens, Greece, Sept. 2014. URL: http://hdl.handle.net/2027/spo.bbp2372.2014.052.

[CP16] **F. Tordini** and J. R. Cooperstock. "Auditory salience modeling via streaming: A behavioural view." In: *Milestones in Music Cognition: BKN 25*. Montreal, Canada, July 2014.

[CP17] **D. Glesser**, F. Bérard, and J. R. Cooperstock. "Overcoming Limitations of the Trackpad for 3D Docking Operations." In: *Human Factors in Computing Systems (CHI), Extended Abstracts*. Paris, France: ACM, Apr. 2013. URL: http://dl.acm.org/authorize?N06273. Acceptance rate: 20%.

[CP18] **C. Côté**, **S. Arseneau**, and J. R. Cooperstock. "Telepresence with no Strings Attached: An Architecture for a Shared Reality Environment." In: *Second International Symposium on Mixed Reality (ISMR)*. Yokohama, Japan, Mar. 2001. URL: https://srl.mcgill.ca/publications/2001-ISMR.pdf.

[CP19] **S. Arseneau** and J. R. Cooperstock. "Automated Camera Tracking in a Real-World Environment." In: Montreal, QC, Canada, 2000.

[CP20] J. R. Cooperstock. "Rethinking the Remote Control." In: *HCI International, Conference on Human-Computer Interaction*. San Francisco, CA, USA, Aug. 1997, p. 116.

Book Chapters

[B1] **T. Kim**, **J. Blum**, **P. Alirezaee**, **A. Arnold**, **P. Fortin**, and J. R. Cooperstock. "Usability of Foot-Based Interaction Techniques for Mobile Solutions." In: *Mobile Solutions and Their Usefulness in Everyday Life*. Springer International Publishing AG, Jan. 2019, pp. 309–329. DOI: 10.1007/978-3-319-93491-4_16. URL: https://link.springer.com/chapter/10.1007/978-3-319-93491-4_16.

Meta Exhibit 1002
Meta v. Mullen - Page 00135

[B2] **M. Wozniewski**, Z. Settel, and J. R. Cooperstock. "Sonic Interaction via Spatial Arrangement in Mixed Reality Environments." In: *Sonic Interaction Design*. Ed. by K. Franinovic and S. Serafin. MIT Press, 2013, pp. 329–340. URL: http://xplorebcpaz.ieee.org/xpl/login.jsp?tp=&arnumber=6504636.

[B3] M. Marchal, **G. Cirio**, **Y. Visell**, F. Fontana, S. Serafin, J. R. Cooperstock, and A. Lécuyer. "Multimodal Rendering of Walking over Virtual Grounds." In: *Human Walking in Virtual Environments*. Ed. by Y. Visell, A. Lécuyer, F. Steinicke, and J. Campos. Springer Verlag, 2013, pp. 263–295. URL: http://www.springer.com/engineering/robotics/book/978-1-4419-8431-9.

[B4] **Y. Visell** and J. R. Cooperstock. "Interacting with augmented floor surfaces." In: *Human Walking in Virtual Environments*. Ed. by Y. Visell, A. Lécuyer, F. Steinicke, and J. Campos. Springer Verlag, 2013, pp. 377–399. URL: http://www.springer.com/engineering/robotics/book/978-1-4419-8431-9.

[B5] **Y. Visell**, **R. Rajalingham**, and J. R. Cooperstock. "A review of nonvisual signatures of human walking with applications to person tracking in augmented environments." In: *Walking with the senses: Perceptual techniques for walking in virtual environments*. Ed. by Y. Visell and F. Fontana. Logos Verlag, 2012, pp. 33–68.

[B6] **Y. Visell**, **S. Smith**, and J. R. Cooperstock. "Distributed human-computer interaction with augmented floor surface." In: *Walking with the senses: Perceptual techniques for walking in virtual environments*. Ed. by Y. Visell and F. Fontana. Logos Verlag, 2012, pp. 15–32.

[B7] J. R. Cooperstock. "Human-Computer Interaction." In: *Wiley Encyclopedia of Computer Science and Engineering*. Ed. by B. W. Wah. Vol. 3. Wiley-Interscience, Mar. 2009, pp. 1529–1542. DOI: 10.1002/9780470050118.ecse524. URL: http://onlinelibrary.wiley.com/doi/10.1002/9780470050118.ecse524/abstract.

[B8] **F. Aubé** and **R. Shield**. "Modeling the Effect of Leadership on Crowd Flow Dynamics." In: *Cellular Automata*. Ed. by P. Sloot, B. Chopard, and A. Hoekstra. Vol. 3305. Lecture Notes in Computer Science. originally presented in International Conference on Cellular Automata for Research and Industry. Amsterdam: Springer Berlin / Heidelberg, Oct. 2004, pp. 601–611. DOI: 10.1007/978-3-540-30479-1_62. URL: http://dx.doi.org/10.1007/978-3-540-30479-1_62.

Other Refereed Publications

[O1] **N. Hieda** and J. R. Cooperstock. *SharedFace2*. International Conference and Exhibition of Virtual Technologies and Uses: Laval Virtual ReVolution (refereed interactive demonstration). Laval, France, Apr. 2015.

[O2] **Y. Visell**, **G. Millet**, and J. R. Cooperstock. *Haptic Display via a Vibrating, Rigid Surface*. Demonstration in IEEE Haptics Symposium. Waltham, MA, USA, Mar. 2010.

[O3] **A. Law**, **J. Ip**, **B. Peck**, **Y. Visell**, P. Kry, and J. R. Cooperstock. *A Multimodal Floor for Virtual Environments*. Demonstration in SIGGRAPH Emerging Technologies. Aug. 2009.

Meta Exhibit 1002
Meta v. Mullen - Page 00136

[O4] **M. Wozniewski**, Z. Settel, and J. R. Cooperstock. *Ménagerie Imaginaire*. Artwork Performance in New Interfaces for Musical Expression (NIME). New York, NY, USA, June 2007.

Non-refereed Contributions

[N1] J. Cooperstock. "Situating UbiComp Education within or distinct from HCI?" In: *Ubiquitous Computing Education: Why, What, and How:* ed. by A. Girouard, A. L. Kun, A. Roudaut, and O. Shaer. Vol. 9. 6. Dagstuhl, Germany: Schloss Dagstuhl–Leibniz-Zentrum fuer Informatik, Mar. 2019. URL: http://drops.dagstuhl.de/opus/volltexte/2019/11460.

[N2] **E. Sheepy**, M. Orjuela-Laverde, and J. R. Cooperstock. "Encouraging active and collaborative learning in two engineering courses." In: *Supporting Active Learning and Technological Innovation in Studies of Education*. Montreal, Canada, June 2016.

[N3] J. R. Cooperstock and G. Lukács. *How to complain to airlines*. CBC Marketplace blog. Mar. 2014. URL: http://www.cbc.ca/marketplace/blog/plane-wrong-how-to-complain-to-airlines.

[N4] **F. Tordini** and J. R. Cooperstock. "Auditory salience modeling via streaming: A behavioural view." In: *Milestones in Music Cognition: BKN 25*. Montreal, Canada, July 2014.

[N5] J. R. Cooperstock. "Overcoming Complexity in the Teaching and Learning Environment." In: *Materials Science and Technology*. Ralph Lloyd Harris Memorial Symposium. Montreal, Oct. 2013.

[N6] J. R. Cooperstock. *From Rehearsal to Performance: Ensemble Learning in Open Orchestra and Distributed Rehearsal for World Opera*. Presentation in Music Anywhere, Anytime: International Symposium on Synchronous Distance Learning. Oct. 2011.

[N7] **Benovoy, M.**, J. Cooperstock, and M. Levine. *Real-Time Facial Recognition*. Phase II Project Report for Department of National Defence. 2010.

[N8] M. Levine, **Benovoy, M.**, and J. Cooperstock. *An Automatic Real-Time Facial Recognition System*. Phase I Project Report for Department of National Defence. 2009.

[N9] **N. Bouillot**, E. Cohen, J. R. Cooperstock, A. Floros, N. Fonseca, R. Foss, M. Goodman, J. Grant, K. Gross, S. Harris, B. Harshbarger, J. Heyraud, L. Jonsson, J. Narus, M. Page, T. Snook, A. Tanaka, J. Trieger, and U. Zanghieri. "AES White Paper AESTD1003V1: Best Practices in Network Audio." In: *Journal of the Audio Engineering Society* 57.9 (Sept. 2009), pp. 729–741. URL: http://www.aes.org/e-lib/browse.cfm?elib=14839.

[N10] V. N. Salimpoor, **M. Benovoy**, G. Longo, J. R. Cooperstock, and R. J. Zatorre. *Qualifying the Chills Response: Differences between Transient and Prolonged Chills in Response to Music*. Presentation in Auditory Perception, Cognition, and Action Meeting. Chicago, IL, USA, 2008.

Meta Exhibit 1002
Meta v. Mullen - Page 00137

[N11] J. Cooperstock. "Plus de largeur du bande, s'il vous plaît." In: *L'interdiscplinarité dans les sciences et technologies de la musique (invited)*. Montreal: Association francophone pour le savoir (ACFAS), May 2006.

[N12] J. Cooperstock. "Integrating Communication with Interaction: Computer Vision Challenges for Interactive and Intelligent Environments." In: *Workshop on Computer Vision for Interactive and Intelligent Environments (invited)*. Lexington, KY, USA, Nov. 2005. URL: http://srl.mcgill.ca/publications/2005-CV4IIE.pdf.

[N13] J. Cooperstock, J. Roston, and Woszczyk. "Broadband Networked Audio: Entering the Era of Multisensory Data Distribution." In: *18th International Congress on Acoustics (invited)*. Kyoto, Apr. 2004.

[N14] **Cayouette, F.**, **Sud, D.**, **Patel, K.**, **Sarikaya, D.**, and J. Cooperstock. "McGill Reddogs Final Report." In: *Robocup*. 2002.

[N15] J. Cooperstock. "Classroom of the Future: Enhancing Education through Augmented Reality." In: *HCI International, Conference on Human-Computer Interaction (invited)*. New Orleans, 2001.

[N16] **Sud, D.**, **Cayouette, F.**, **Gu, J.**, and J. Cooperstock. "McGill Reddogs Final Report." In: *Robocup*. 2001.

[N17] A. Saroyan, R. Harris, and J. R. Cooperstock. *Applying pedagogical principles to teaching and learning with technology*. Multi-cultural perspectives on the use of technology in education. Montreal, QC, Canada, 2000. URL: http://www.education.mcgill.ca/NAFTA.

Patents

[P1] **P. Fortin**, S. Kim, and J. R. Cooperstock. "Closed-loop XR Stimulus Presentation and Perception Feedback using Multi-Channel Physiological Signals." US12032740B2 (United States). July 2024.

[P2] **D. Marino**, **M. Henry**, **P. Fortin**, and J. R. Cooperstock. "System and method for displaying reaction animations." US application 18/463,799 (United States). 2023.

[P3] **H. Lee**, **C. Ducher**, **R. Wang**, **M. Henry**, and J. R. Cooperstock. "Voice Parameter Determination Method, System and Device." US application 18/310,213; Canada application 3,198,267 (United States). 2023.

[P4] **P. Fortin**, **J. Blum**, **Antoine Weill–Duflos**, and J. R. Cooperstock. "System and Method for Wearable Device Contact Force Estimation and Adjustment Feedback." application US 20230129166 A1 (United States). 2022.

[P5] J. R. Cooperstock, **A. Weill-Duflos**, **J. Regimbal**, **N. Radi**, **J. Blum**, **P. Alirezaee**, and **Y. Zhang**. "Methods and systems for controlling a haptic display." US 63/006,141, PCT/CA2021/050461, US 17/917,761 (United States). 2021.

[P6] J. R. Cooperstock and **J. Blum**. "Improving Haptic Feedback on Wearable Devices through Accelerometer Measurements." provisional application US 62/237,772; US 62/416,910 (United States). 2015.

Meta Exhibit 1002
Meta v. Mullen - Page 00138

[P7] J. R. Cooperstock, **Y. Visell**, **A. Law**, and K. Franinovic. "Floor-based Haptic Communication System." US 9,041,521 (United States). May 2015.

[P8] J. R. Cooperstock, **J. Blum**, **M. Bouchard**, **A. Olmos**, **S. Panëels**, and **D. El-Shimy**. "Spatialized audio augmented reality for blind users with a smartphone." provisional application US 61/727,828 (expired) (United States). 2012.

[P9] J. R. Cooperstock, **G. Millet**, and **M. Otis**. "Floor-Based Variable Friction Display." provisional application US 61/577,148 (expired) (United States). 2011.

[P10] J. R. Cooperstock, **L. To**, and R. Hess. "Binocular vision assessment and/or therapy." US 8,066,372 (United States). Nov. 2011.

[P11] **S. Spackman**, **S. Pelletier**, and J. R. Cooperstock. "High-resolution Video Synthesis." application 2,435,791 filed July 24, 2003 (expired) (Canada). 2003.

[P12] J. R. Cooperstock, **Y. Zhang**, and **S. Spackman**. "Adaptive Compression for the Storage, Transmission, and Arbitrary Quality Reconstruction of Spatial Data." US 60/339,816, provisional application filed Dec. 17, 2001 (expired) (United States). 2001.

[P13] J. R. Cooperstock and **S. Arseneau**. "A robust person tracking method and system." US 60/234,197 provisional application, filed Sept. 20, 2000 (expired) (United States). 2000.

[P14] J. R. Cooperstock. "Pixel Count-Sensitive PDA Tool Mechanism with Cut/Paste and/or Copy/Paste Function." P09-022797, filed in Japan by Sony Corp. (Japan). Feb. 1997.

Technology Transfer

License agreement signed in 2014 with amblyotech.com to commercialize amblyopia treatment (protected under US patent 8,066,372 "Binocular vision assessment and/or therapy"). The technology was subsequently acquired by Novartis in April 2020.

Research Demonstrations

[D1] 3D Printed Haptic Illusions and Demonstrations. IEEE World Haptics, Tokyo, Japan (conducted by Antoine Weill-Duflos and Pascal Fortin), July 2019.

[D2] Distributed Musical Practice and Performance, I Medici di McGill, Oscar Peterson Hall, Montreal, April 28, 2008.

[D3] Wide Screen Window on the World: Life Size HD Videoconferencing. Supercomputing 2005, Bandwidth Challenge, Seattle, November 16, 2005.

[D4] Streaming DSD Audio comes to the AES. Audio Engineering Society 117th Convention, San Francisco, October 31, 2004.

[D5] Cross-continental low-latency ultra-videoconferencing. McGill-Stanford jazz jam, June 13, 2002.

[D6] Remote master's class using SDI video and multichannel audio. McGill-National Research Council session with Pinchas Zukerman, March 25, 2002.

Meta Exhibit 1002
Meta v. Mullen - Page 00139

[D7] SDI video and multichannel audio. CANARIE's 7th Advanced Networks Workshop, Toronto, November 28, 2001.

[D8] Low-latency distributed violin duet in full-frame video. RISQ 2001 Conference, Montreal, November 5, 2001.

The Globe and Mail noted that *"Cooperstock's demonstration was a watershed event for the elite club of the world's computer network engineers. No one had ever before been able to demonstrate that, under the right conditions, it is possible for natural, normal human interaction to occur over the Internet."*

[D9] The Recording Studio that Spans a Continent. Audio Engineering Society 109th Convention, Los Angeles, September 23, 2000.

The Audio Engineering Society noted that this *"Landmark demonstration shows cost effective and high performance transmission systems for high quality 24-bit, 96kHz uncompressed mulitchannel audio are on horizon"*

[D10] Dolby Digital 5.1 audio with MPEG-2 video around the world. Internet Global Summit INET 2000 Conference, Yokohama, July 20, 2000.

CBC Radio noted that *"McGill University in Montreal has made Internet history by setting up the first intercontinental netcast of a live concert in surround sound and full-screen video."*

[D11] Dolby Digital 5.1 audio with MPEG-2 video. CANARIE's 5th Advanced Networks Workshop, Toronto, November 29, 1999.

[D12] First real-time Multichannel Audio Internet demo. Audio Engineering Society 107th Convention, New York, September 26, 1999.

The Learning Technologies Networked noted that *"The performance marked the first real time multichannel audio Internet transmission, a feat made possible by software developed at McGill University by a team under the leadership of Professor Jeremy Cooperstock."*

Invited Talks

Invited Talks to Industry, Students, and the Public

[T1] "HCI Research in the Shared Reality Lab", Professor Speaker Series, Electrical, Computer & Software Engineering Students' Society of McGill University, Montreal, November 8, 2024.

[T2] "AI Digital Nurse Avatar", Place Kensington Retirement Home, Montreal, September 12, 2024.

[T3] "HCI Research in the Shared Reality Lab", Marianopolis Engineering Society, Marianopolis College, Montreal, November 21, 2023.

[T4] "HCI Research inthe Shared Reality Lab", Professor Speaker Series, Electrical, Computer & Software Engineering Students' Society of McGill University, Montreal, November 15, 2023.

[T5] "Engineering of Technologies to Improve the Lives of People Living with Vision Loss", Bioengineering and Biomedical Engineering, McGill University, September 15, 2023.

Meta Exhibit 1002
Meta v. Mullen - Page 00140

[T6] "Using smartphones to answer 'What's around me?', 'Am I crossing the street safely?' and 'Where's the entrance?"', Accessible Coding Demonstrations for Youth with Visual Impairment, Science Odyssey 2021, May 1, 2021.

[T7] "From flight simulators to the passenger experience: what can we learn from pilot-training tools to improve airline customer service", AIST–NRC Collaboration Meeting on Improving Client-Agent Interaction, January 17, 2020.

[T8] "I Feel the Earth Move (Under My Feet): Haptic Interaction for Telepresence and Information Delivery", Department of Information Engineering and Computer Science, University of Trento, July 4, 2019.

[T9] "I Feel the Earth Move (Under My Feet): Haptic Interaction for Telepresence and Information Delivery", Department of Industrial Engineering and Management, Ben Gurion University, March 11, 2019.

[T10] "I Feel the Earth Move (Under My Feet): Haptic Interaction for Telepresence and Information Delivery", Information Systems, University of Haifa, November 7, 2018.

[T11] "What's around me? Audio augmented reality for blind users with a smartphone, Pint of Science, Montreal, May 15, 2018.

[T12] Presenter at Canadian National Institute for the Blind's TechnoVision+ Conference, Montreal, May 5, 2017.

[T13] "Innovations for Gaming, AR, Simulation & Training", Innovations for gaming, augmented reality, simulation and training, and other applications, Centre d'entreprises et d'innovation de Montreal (CEIM), April 8, 2016.

[T14] "Enhanced Human: Wearable computing that transforms how we perceive and interact with our world", Department of Computer Science, Technion–Israel Institute of Technology, February 11, 2016.

[T15] "Is Humanity Smart Enough for AI?", McGill Science Outreach Program, Freaky Friday public outreach lecture, October 23, 2015.

[T16] "Delivering a Compelling User Experience in a Computer-Mediated Environment", HCIN 5300, Interactive Entertainment Technologies, Carleton University, March 7, 2014.

[T17] "Multimedia as a Building Block: How audio, video and haptics integrate in a Shared Reality", Multimedia Systems, GLIS 633, School of Information Studies, McGill University, February 13, 2014.

[T18] "Are we there yet? Cognitive Science Challenges in Telepresence and Virtual Reality", Student Association of Cognitive Science, Cognitive Science Research Day, McGill University, November 13, 2013.

[T19] "Telepresence doesn't quite cut it: Multimodal Challenges in Virtual and Shared Reality", Institute of Telecommunications and Multimedia Applications, Universidad Politècnica de València, July 10, 2013.

Meta Exhibit 1002
Meta v. Mullen - Page 00141

[T20] "Telepresence doesn't quite cut it: Multimodal Challenges in Virtual and Shared Reality", Dawson College, First Choice Science speakers series, April 17, 2013.

[T21] "Dangerous AI or dangerous us?", Academia Week Artificial Intelligence event, Science Undergraduate Society, McGill University, January 24, 2013.

[T22] "They don't use Skype on the Holodeck", Department of Computer Science, University of British Columbia, July 4, 2012.

[T23] "But can the Holodeck do a good Shiraz?", School of Computer Science and IT, Royal Melbourne Institute of Technology, February 17, 2012.

[T24] "But can the Holodeck do a good Shiraz?", School of Information Technologies, University of Sydney, February 15, 2012.

[T25] "Distributed Music Performance and Latency Issues", School of Drama, Fine Art and Music, University of Newcastle (Australia), February 13, 2012.

[T26] "But can the Holodeck do a good Pinot noir?", Department of Computer Science, University of Otago, January 23, 2012.

[T27] "Shared Reality: Toward perceptually convincing computer-mediated environments", Department of Computer Science, University of Auckland, August 25, 2011.

[T28] "This is your brain on Shared Reality: Toward perceptually convincing computed-mediated environments", Vanier College, Science Week Presentation, March 24, 2011.

[T29] "This is your brain on Shared Reality: Toward perceptually convincing computed-mediated environments", Simula Lab, Oslo, May 15, 2009.

[T30] "This is your brain on Shared Reality: Toward perceptually convincing computed-mediated environments", Ambient Intelligence Group, CITEC, Bielefeld University, May 6, 2009.

[T31] "Distributed and Multimodal Interaction in Virtual and Augmented Reality Environments", McGill University, School of Physical and Occupational Therapy, November 25, 2008.

[T32] "Shared Reality: Effective Interaction for (Demanding) Distributed Tasks", University of Victoria, September 16, 2008.

[T33] "Bidirectional video communication for real-time applications", Institut für Telematik, University of Lübeck, Germany, May 15, 2008.

[T34] "Shared Reality: Effective Interaction for (Demanding) Distributed Tasks", Aalborg University, Esbjerg, Denmark, May 14, 2008.

[T35] "Distributed Multimodal Interaction", Bang & Olufsen, Struer, Denmark, May 13, 2008.

[T36] "Distributed Musical Practice and Performance", Biology and Music Lecture, I Medici di McGill, April 28, 2008.

Meta Exhibit 1002
Meta v. Mullen - Page 00142

[T37] "Shared Reality: Effective Interaction for (Demanding) Distributed Tasks", Arts, Media and Engineering, Arizona State University, February 29, 2008

[T38] "From Videoconferencing to Shared Reality" Department of Electrical and Computer Engineering, University of British Columbia, October 4, 2007.

[T39] "Engaging Technolog(ies) for Effective Interaction" Department of Computer Science, Hebrew University of Jerusalem, April 19, 2005.

[T40] "Engaging Technolog(ies) for Effective Interaction" Intelligence, Agents, Multimedia Group, University of Southampton, UK, March 7, 2005.

[T41] "From Videoconferencing to Shared Reality" l'Institut de Recherche et Coordination Acoustique/Musique (IRCAM), Paris, November 25, 2004.

[T42] "From Videoconferencing to Shared Reality" Taiyuan University, Taiyuan, China, April 18, 2004.

[T43] "From Videoconferencing to Shared Reality" Tsighua University, Beijing, China, April 14, 2004.

[T44] "From Videoconferencing to Shared Reality" Beijing University, Beijing, China, April 14, 2004.

[T45] "From Videoconferencing to Shared Reality" Beihan University, Beijing, China, April 12, 2004.

[T46] "From Videoconferencing to Shared Reality" Advanced Telecommunications Research (ATR), Nara, Japan, April 9, 2004.

[T47] "From Videoconferencing to Shared Reality" Dept. of Industrial Engineering, Musashi Institute of Technology, April 5, 2004.

[T48] "High-fidelity telepresence" Graphics and Geometric Computing Seminar Series, Technion – Israel Institute of Technology, January 1, 2003.

[T49] "The Virtual Studio" Royal Conservatory of Music, Toronto, February 25, 2002.

[T50] "Building a Shared Reality" Department of Computer Science, University of Toronto, February 25, 2002.

[T51] "Distributed Concerts and Shared Reality: Just how much streamed data and computation do we need to support effective interaction?" Department of Computer Science, Clarkson University, November 1, 2001.

[T52] "Robotics and Design" Round Table Panel, Centre Design UQAM, February 9, 2000.

[T53] "The Shared Reality Environment" Department of Electrical and Computer Engineering, Ecole Polytechnique, Montreal, May 28, 1999.

Meta Exhibit 1002
Meta v. Mullen - Page 00143

Invited Talks in Scholarly Conferences and Workshops

[T54] "Intelligent Systems to Enhance Human Experience", International Laboratory of Learning Systems–DATAIA Workshop, Paris, May 25, 2023.

[T55] Speaker in "Ethics Research I am Excited About", Laidley Centre for Business Ethics, Montreal, April 28, 2023.

[T56] Speaker in "Next Gen Health Powered By The Open Grid And Edge AI", IEEE Future Networks Forum, Montreal, October 14, 2022.

[T57] "Touch and feel when it isn't real: Integrating haptics into the XR experience", InterDigital Scientific Seminar series, December 4, 2020.

[T58] "Taking Haptics Out of the Lab and Into the Wild", Introduction to Haptics for Next Generation XR. International Conference on Intelligent Robots and Systems Tutorial Session, October 29, 2020.

[T59] "Assistive Technology Research in the Shared Reality Lab", Conférence scientifique du CRIR-Institut Nazareth et Louis-Braille, September 25, 2019.

[T60] "Learning from sparse feedback: Adapting an environmental awareness app to visually impaired user preferences", ACM-SIGCHI sponsored summer school on Intelligent User Interfaces in the Era of IoT and Smart Environments, Haifa, Israel, October 3, 2018.

[T61] Speaker in "AR/VR panel", IEEE Multimedia Signal Processing Workshop, Montreal, September 23, 2016.

[T62] "Immersive multimedia and mobile interaction: Applications to new media, gaming, medicine, and beyond" Keynote speaker, Entertainment Technology Summit, Concordia University, Montreal, September 17, 2016.

[T63] "Leveraging video in public safety scenarios", Ninth Canadian Public Safety Interoperability Workshop (CITIG 9), Toronto, December 1, 2015.

[T64] "Future Cities (2040) – Mind: Human and Machine", Institute for the Public Life of Arts and Ideas, Symposium on Future Cities, March 13, 2015.

[T65] "UltraVideo and the Quest for Minimal Latency", International Workshop on High Quality Dynamic cross-continental Networked Artistic interaction, World Opera Association, Struer, Denmark, August 29, 2013.

[T66] "Assisting the blind and treating amblyopia: Two more things you can do with your smartphone", 15e Symposium scientifique sur l'incapacité visuelle et la réadaptation (presented with J. Blum). University of Montreal, February 12, 2013.

[T67] "Revolutions in human-device interaction: How new paradigms impact user experience", International Conference on Consumer Electronics, Consumer Electronics Society, Las Vegas, January 12, 2013.

Meta Exhibit 1002
Meta v. Mullen - Page 00144

[T68] "Around the World in 80 ms." Panel presentation in Workshop of the Audio Engineering Society Convention, San Francisco, November 5, 2010.

[T69] "UltraVideo and Virtual Presence: A Video Perspective." Presentation on Teaching in Distributed Performance, Tromsø, Norway, October 15, 2010.

[T70] "Future Interfaces for Audio." Panel presentation in Workshop of the Audio Engineering Society Convention, New York, October 10, 2009.

[T71] "World Opera Technologies and Tests", Danish Sound Technology Network, Aalborg University, June 8, 2009.

[T72] "The Montreal World Opera Experiments". Presentation at the World Opera Symposium, Struer, Denmark, May 12, 2009.

[T73] "Audio-Visual-Haptic-Tactile: Putting them all together for an engaging immersive experience". Panel presentation in Workshop of the Audio Engineering Society Convention, Munich, Germany, May 10, 2009.

[T74] "New Technologies for Audio over IP". Panel presentation in Workshop of the Audio Engineering Society Convention, Munich, Germany, May 10, 2009.

[T75] "A Platform to Create and Support Ocean Science Virtual Organizations (Oceans 2.0)" and "HSVO Health Services Virtual Organization", RISQ 2008 Colloquium, Montreal, November 14, 2008.

[T76] "The Future of VC: Music Teaching and High Fidelity Video", Elevate 2008: Reaching New Heights in Educational Video-conferencing, Banff, August 27–28, 2008.

[T77] "Creating an immersive video space", International Symposium on The World Opera: When the Opera stage becomes worldwide, Tromsø, Norway, May 9, 2008.

[T78] "Multimodal Streaming and Distributed Audio Interaction", High Quality Audio over Networks (ANET II) Summit, Banff Centre, April 12, 2008.

[T79] "Music and Games: How Fun Applications Stimulate Core Technologies", Canadian University Software Engineering Conference, January 19, 2008.

[T80] "From Teleoperation to Teleimmersion: Design Challenges for Distributed Interaction", Canadian University Software Engineering Conference, January 19, 2007.

[T81] "CANARIE sur UCLP et ROADM, deux technologies qui changent le monde des télécoms", Round Table panel, RISQ Annual Conference, Quebec City, October 16, 2006.

[T82] "La recherche sur en ultra-videoconference", Panel on "Vitrine technopédagogique sur la vidéoconférence", RISQ Annual Conference, Quebec City, October 16, 2006.

[T83] "Broadband transmission of multimodal content at the Centre for Interdisciplinary Research in Music Media and Technology (CIRMMT)", RISQ-CA*net4 Advanced Networking Day, Montreal, October 24, 2005.

Meta Exhibit 1002
Meta v. Mullen - Page 00145

[T84] "Low-Latency Ultra-Videoconferencing and Shared Reality" Interfaces Montreal, Rencontre du Génie numérique et des Affaires. Montreal, October 11, 2005.

[T85] "Shared Spaces" Asia-Pacific Advanced Networks (APAN) Conference, Taipei Aug. 22–27, 2005.

[T86] "Engaging Technolog(ies) for Effective Interaction" Keynote speaker, World Conference on Educational Multimedia, Hypermedia and Telecommunications, Montreal, June 29, 2005.

[T87] "Broadband Distance Education in 2007: Views from the Demand Side" Invited Panelist. World Conference on Educational Multimedia, Hypermedia and Telecommunications, Montreal, June 29, 2005.

[T88] "Ultra-Videoconferencing and Intelligent Classrooms" Keynote speaker, Canadian Higher Education and Information Technology Conference, Montreal, June 28, 2005.

[T89] "From Videoconferencing to Shared Reality" Bell University Laboratories' Annual Conference, Toronto, November 3, 2004.

[T90] "History of Internet Audio Experiments at McGill" High Quality Audio over Networks (ANET) Summit, Banff Centre, August 20–22, 2004.

[T91] "Advanced Video Applications: Developments in Extreme Video" Southeastern Universities Research Association Video Development Initiative (SURA/ViDe) 6th Annual Digital Video Workshop. Indianapolis, March 24, 2004.

[T92] "The Democratic Revolutions – Peer to Peer Meets Open Source: Design, Philosophy, Engineering" Intimate Technologies/Dangerous Zones. Banff New Media Institute, Banff Centre, April 27, 2002.

[T93] "The Development of Ultra VC Applications and Technology" Southeastern Universities Research Association Video Development Initative (SURA/ViDe) 4th Annual Digital Video Workshop. University of Alabama at Birmingham, April 25, 2002.

[T94] "High quality wide-screen SDI video and multichannel audio over CA*net3" CANARIE's 7th Advanced Networks Workshop, Toronto, November 28, 2001.

[T95] "Low-latency comes to videoconferencing: The Frères Jacques duet at a distance" RISQ 2001 Conference, Montreal, November 5, 2001.

[T96] Advanced Networking and the Arts: Innovations in Outreach, Collaboration, and Performance. Panel Discussion at Internet Global Summit INET 2001 Conference, Stockholm, June 6, 2001.

[T97] "The McGill–Calgary Advanced Learnware Network" CANARIE's 6th Advanced Networks Workshop, Montreal, November 29, 2000.

[T98] "Networks and Music Instruction" Panel Discussion with Pinchas Zukerman and Wieslaw Woszczyk, CANARIE's 6th Advanced Networks Workshop, Montreal, November 29, 2000.

Meta Exhibit 1002
Meta v. Mullen - Page 00146

[T99] "Tools for Distributed VR" Canadian Working Group on Virtualized Reality Systems, Montreal, November 28, 2000.

[T100] "Evolution of the Intelligent Classroom" Multicultural Perspectives on the use of Technology in Education. Montreal, October 2, 2000.

[T101] The Brave New World of Ubiquitous Bandwidth" Internet Global Summit INET 2000 Conference, Yokohama, July 20, 2000.

[T102] "Multichannel Audio over the Internet: The Next Phase" RISQ 2000 Conference, May 31, 2000.

[T103] "Multichannel Audio over the Internet" CANARIE's 5th Advanced Networks Workshop, Toronto, November 29, 1999.

[T104] "When Telemedicine feels like Regular Medicine" Communications and Information Technology Ontario (CITO) Healthcare for the Future: Telemedicine, February 18, 1999.

Media Exposure

[M1] Ami-Télé, Ça me regarde, February 8, 2018

[M2] Forbes, March 9, 2017

[M3] Discovery Channel, Daily Planet, Mar. 7, 2017

[M4] Télé-Québec, Electrons Libre, Jan. 17, 2017

[M5] ACB Radio, Mainstream, Nov. 18, 2016

[M6] CBC Radio, Tech Column, Aug. 8, 2016

[M7] CJAD Radio, Tech Talk, Aug. 6, 2016

[M8] Mobile Syrup, Aug. 4, 2016

[M9] CBC News, Aug. 4, 2016

[M10] Betakit, Aug. 3, 2016

[M11] Accessible Media Inc., Live from Studio 5, Aug. 2, 2016

[M12] La Presse, Jul. 31, 2016

[M13] CTV News, Jul. 29, 2016

[M14] Stevivor, Mar. 2015

[M15] Venture Beat, Mar. 3, 2015

[M16] Club Social (TV5), Feb. 4, 2011

[M17] Global TV (National), Jan. 29, 2009

[M18] Global TV (Montreal), Jan. 27, 2009

[M19] CBC Radio, As it Happens, Jan. 27, 2009

[M20] National Post, Jan. 27, 2009

Meta Exhibit 1002
Meta v. Mullen - Page 00147

[M21] Montreal Gazette, Jan. 27, 2009

[M22] Montreal Gazette, Feb. 20, 2009

[M23] Inside Higher Education, Sept. 3, 2008

[M24] CBC Radio (Daybreak), Sept. 3, 2008

[M25] CJAD radio, Sept. 2, 2008

[M26] Cabling Networing Systems, Jan. 2006

[M27] McGill Reporter, Nov. 24, 2005

[M28] CTV Quebec, Global News, Dec. 23, 2002

[M29] New York Times, Technology Section, Dec. 19, 2002

[M30] Discovery Channel, Daily Planet, Oct. 30, 2002

[M31] CFCF (CTV Quebec) Global News, June 19, 2002

[M32] National Post, June 15, 2002

[M33] CBC Television, The National, May 3, 2002

[M34] McGill Reporter, Learning the Strings, April 11, 2002

[M35] Ottawa Citizen, March 29, 2002

[M36] Montreal Gazette, March 27, 2002

[M37] Globe & Mail, Dec. 1, 2001

[M38] Canal Z, La Revanche des Nerdz, Nov. 13, 2001

[M39] Montreal Gazette, Nov. 10, 2001

[M40] CJAD Radio, The World Today, July 31, 2001

[M41] McGill Reporter, April 5, 2001

[M42] Globe & Mail Report on Business, Oct. 28, 2000

[M43] TQS Double Clic!, Oct. 7, 2000

[M44] McGill Reporter, Sept. 21, 2000

[M45] UPath.com, Vol 40, 2000

[M46] CBC (Montreal) Home Run, Aug. 22, 2000

[M47] Montreal Gazette, Aug. 22, 2000

[M48] CFCF (CTV Quebec) Pulse News, Aug. 21, 2000

[M49] CBC Radio The Arts Report, July 20, 2000

[M50] Elle Quebec, June 2000

[M51] Journal Le Monde des Affaires, May 2000

[M52] Canal Z, Technofolie, May 3, 2000

[M53] TQS Double Click, April 29, 2000

[M54] McGill Reporter, April 6, 2000

Meta Exhibit 1002
Meta v. Mullen - Page 00148

[M55] Briefing Digital, April 2000

[M56] Interface: La Revue de la Recherche, Vol. 21, No. 2, March-April 2000

[M57] American Society of Mechanical Engineers, Mechanical Advantage, Vol 9, No 3, March 2000

[M58] Canal Z, La Revanche des Nerdz, Feb. 2000

[M59] CFCF (CTV Quebec) Pulse News, Feb. 29, 2000

[M60] Canal Vox: CityMag, Jan. 15, 2000

[M61] Montreal Mirror, Jan. 6, 2000

[M62] Plan Mega: La revue du genie québecois, Ordre des ingenieurs du Québec. Vol 1, Jan. 2000

[M63] Radio Corporation of Singapore: Science and Technology Watch, Dec. 1999

[M64] Radio Canada (CBC French) Les Annees lumiere, Nov. 28, 1999

[M65] Financial Times Life/Technology, Nov. 25, 1999

[M66] CBC Radio: As it Happens, Nov. 22, 1999

[M67] Journal de Montreal, Nov. 19, 1999

[M68] Le Devoir, Nov. 18, 1999

[M69] TVA CyberClub, Nov. 13, 1999

[M70] La Presse, Sept. 26, 1999

[M71] CJAD Radio, April 11, 1999

[M72] Montreal Mirror, April 8, 1999

[M73] McGill Reporter, Jan. 14, 1999

[M74] High-Tech Shower International, Nov. 26, 1997

[M75] CBC Newsworld "Futureworld", Oct. 5, 1996

[M76] Discovery Channel, Sept. 18, 1996

[M77] Toronto Star, Sept. 15, 1996

[M78] University of Toronto Varsity, Sept. 3, 1996

[M79] TV Ontario "Studio Two", June 26, 1995

Meta Exhibit 1002
Meta v. Mullen - Page 00149

Research Supervision

Research Professionals

Name	Period	Project title	Present Position
Gvozdev, Mikhail	Feb 2025–	AI solutions architect, IMAGE project	
Yousef, Shahd	Sep 2024–	server-side developer, IMAGE project	
Singh, Jaydeep	Sep 2021–	web developer, IMAGE project	
Novack, Kaylee	Sep 2021–Apr 2022	medical doctor researcher on Avatar Therapy project	Medical Resident, Université de Montréal
Kuo, Cyan	Aug 2021 – Dec 2023	Usability Research Lead, IMAGE project	
Patil, Gandharv	Jun 2021 – Mar 2022	ML Research Lead, IMAGE project	PhD student, McGill
Grond, Florian	Apr 2021 – Mar 2023	Audio Research Lead, IMAGE project	Assistant Professor, Concordia University
Eichhorn, Alexander	Feb 2013 – Aug 2013	research associate under GRAND	CTO of Kidtsunami
Bouchard, Mathieu	Jan 2011 – Nov 2018	research assistant under MSG project	
Chen, Guangyi	Jan 2010 – Jul 2010	research associate under Canarie NEP	
Vincent, Coralie	Oct 2010 – Mar 2011	research assistant	Research Engineer, IRCAM, France
Dansereau, Don	Jun 2009 – Jan 2010	research associate under FRQNT grant	Senior Lecturer, University of Sydney

Continued on next page

Meta Exhibit 1002
Meta v. Mullen - Page 00150

Name	**Period**	**Project title**	**Present Position**
To, Long	Jan 2009 – Sep 2011	research associate under NSERC I2I	Software engineer, Abcam
Blum, Jeff	Oct 2008 – Aug 2013	research assistant under MSG project	
Olmos, Adriana	Sep 2008 – July 2012	user interface engineer under Canarie NEP	Interaction designer, Google/YouTube
Sun, Haijian	Sep 2008 – Oct 2010	computer engineer under Canarie NEP	ECM Consultant, JCDS Solutions Inc.
Soukhodolski, I.	Oct 2005 – Dec 2007	web services programmer under Canarie IIP	Owner, W4 Technology
Kiewe, Howard	Oct 2005 – Dec 2007	user interface developer under Canarie IIP	consultant
Spackman, S.	2000–2006	research associate on Canarie and VRQ projects	Google, Mountain View
Sarikaya, Deniz	2003–2004	research assistant on VRQ projects	deceased
Soucy, Gilbert	1999	research associate on CFI project	Imaging Specialist, 36pix Inc., Montreal

Meta Exhibit 1002
Meta v. Mullen - Page 00151

Post-doctoral Fellows

Name	Period	Project title	Present Position
Byeon, Yeong-Hyeon	Jan 2024 – Nov 2024	Bionic Ear Project	
Bouzekri, Élodie	Sep 2023 – Aug 2024	ADAIR Project	Assistant Professor, Université de Bretagne Occidentale
Fontana De Vargas, Mauricio	Jan 2023 – Nov 2023	Ai-Digital Nurse Avatar (ADiNA)	AI+VR Research Scientist, Meta, Toronto
Sullivan, John	Sep 2021 – Apr 2022	Multimodal Rendering for the IMAGE Project	post-doctoral fellow, Université Paris-Saclay
Jyoti, Vishav	Mar 2021 – Feb 2022	Mixed-Reality Platform for Simulation and Synthesis of Multi-Modal Hallucinations	Software Engineer, Youtube, India
Talhan, Aishwari	Jan 2021 – Dec 2022	Wearable Haptics	Research Scientist, SUNY Research Foundation, Albany, New York
Yoo, Yongjae	Mar 2020 – Jul 2022	Wearable Haptics and Haptics Lead, IMAGE project	Assistant Professor, Hanyang University ERICA, South Korea
Weill-Duflos, A.	Jan 2018 – Jan 2021	Wearable Haptics	Director of Research and Product Integration, Haply Robotics
Arnold, Andre	Oct 2017 – Dec 2017	Wearable Haptics	Product Manager – AI Nuvoola

Continued on next page

Meta Exhibit 1002
Meta v. Mullen - Page 00152

Name	**Period**	**Project title**	**Present Position**
Panëels, S.	Jan 2011 – Jan 2012	Natural Interactive Walking and In-Situ Audio Services	Researcher, Commissariat à l'énergie atomique et aux énergies alternatives (CEA)
Pelletier, S.	Nov 2009 – Jun 2011	Real-time Image-based Rendering (Canarie NEP, 2009-2010)	
		Parallax Barrier Display rendering software optimization (NSERC ENGAGE, 2011	Game Programmer, Behaviour Interactive
Otis, Martin	Jan 2010 – Dec 2010	Natural Interactive Walking (FRQNT Scholarship)	Assoc. Professor, U. Québec à Chicoutimi
Millet, G.	Nov 2009 – Mar 2012	Natural Interactive Walking	Patent Examiner, EPO, The Hague
Bouillot, Nicolas	Sep 2007 – Dec 2011	Mobile Audio Interaction (NSERC New Media Initiative, 2007-2009)	
		Open Orchestra (Canarie NEP-2 Project)	Co-Founder - Lab148
Darolti, Cristina	Jan – Dec 2009	Real-time Image-based Rendering (Canarie NEP)	Patent Examiner, EPO, The Hague
Wang, Guangyu	Sep 2007 – Mar 2011	Neurosurgical Visualization and Virtual Presence (NSERC Strategic and NCE)	Facebook, Mountain View
Wang, Yan	2002–2003	Channel and spatial view allocation for videoconferencing (VRQ)	V.P. Marketing, AMH Canada

Meta Exhibit 1002
Meta v. Mullen - Page 00153

Ph.D. Students

Name	Period	Thesis title	Present Position
Riazifar, Myles	Jan 2025–present	Advanced Airspace Usability	
Pinheiro de Oliveira, Henrique Jongh	Mar 2024–present	Orchestrating LLMs for blind and low-vision users, Cotutelle student with Universidade Federal do Rio Grande do Sul	
Kuo, Cyan	Jan 2024–present	Multimodal Perception in Sensory Substitution Frameworks	
Knappe, Sabrina*	Jan 2023–present	Advanced Airspace Usability	
Samuel, Segun*	Jan 2023–present	Spatial content representation strategies for blind and low-vision users	
Conan, Corentin*	Sep 2022–present	Advanced Airspace Usability	
Astles, Samantha*	Sep 2022–Jan 2024	Advanced Airspace Usability	
Shen, Lichao*	Oct 2021–Aug 2023	Social telepresence	
Regimbal, J.*§†C	Sep 2021–present	Audio-haptic authoring for information rich content delivery	
Fortin, P.*§	Sep 2016–Sep 2021	Methods and Interfaces for Closed-Loop Smartphone Communications	Asst. Professor, U. Québec à Chicoutimi
Blum, Jeff*†g	Sep 2013–present	Implicit Communication for Enriched Human Interaction	
Erfani-Joorabchi, M.*	Jan 2013–Jan 2015		iOS Software Engineer, Google

Continued on next page

Meta Exhibit 1002
Meta v. Mullen - Page 00154

Name	**Period**	**Thesis title**	**Present Position**
Anlauff, Jan*	Jan 2011–present	Sensor-Actor Wearables	
Tordini, F.	Jan 2011–Feb 2018	Auditory salience modeling for continuous processes sonification	Technology Transfer Manager, Innovation and Partnerships, McGill University
Ghourchian, N.*†	Jan 2010–Apr 2011	Affective Evaluation	transferred to another group
El-Shimy, D.†	Jan 2009–Nov 2014	Reactive Environment for Network Music Performance	Director of UX Research, WISE, London UK
Benovoy, M.†	Oct 2007–Aug 2010	Biosignals analysis	transferred to another group
Visell, Yon	Sep 2005–Mar 2011	Walking on virtual ground: physics, perception, and interface design	Assistant Professor (ECE), UC Santa Barbara
Qi, Zhi	Jan 2004–Dec 2008	Towards dynamic mosaic generation with robustness to parallax effects	Associate Professor (School of Electronic Science & Engineering), Southeast University, China
Pelletier, S.^{p}	Jan 2003–Oct 2009	Acceleration methods for image super-resolution	Game Programmer, Behaviour Interactive
Yin, Jianfeng	Sep 2000–Aug 2008	Toward an Alternative Approach to Multi-Camera Scene Reconstruction	Software engineer, Geomagical Labs
Sun, Wei	2002–2006	Multi-camera Object Segmentation in Dynamically Textured Scenes Using Disparity Contours	Apple Inc., Cupertino

Continued on next page

Meta Exhibit 1002
Meta v. Mullen - Page 00155

Name	**Period**	**Thesis title**	**Present Position**
Cayouette, F.[†]	2003–2006	human tracking (withdrew from program)	Generalist Programmer, Reflector Entertainment
Arseneau, S.	2000–2006	Representing Junctions through Asymmetric Tensor Diffusion	Chief Technology Officer, MVP, Austin

[*] McGill Engineering Doctoral Award recipient
[†] NSERC PGS D Scholarship recipient
[†C] NSERC CGS D Scholarship recipient
[§] FRQNT Scholarship recipient
[g] Graphics Animation and New Media (GRAND) Scholarship recipient
[p] Precarn Scholarship

Additional Ph.D. Supervisory Service

I co-supervised a portion of the thesis work of the following students:

- Kilic, Şeyma Nur (Jan 2025-), visiting student from Istanbul University-Cerrahpasa
- Du, Xiaoxi (Sep 2023-Aug 2024), visiting student from Southeast University, Nanjing, China
- Mousavi, Mastoureh (Sep 2023-), visiting student from Azad University, Tehran, Iran
- Liu, Xian (Nov 2013-Dec 2015), visiting student from University of Electronic Science and Technology, China
- Xie, Meng (Sep 2012-Mar 2014), visiting student from Beijing University of Aeronautics and Astronautics, China
- Grond, Florian. (Jul-Dec 2010), visiting student from Bielefeld University, Germany
- Zambon, S. (Jul-Oct 2010), visiting student from Verona University, Italy
- Cirio, Gabriel (Jun-Aug 2010), visiting student from INRIA-IRISA, France
- Rizutti, Costantino (Sep-Oct 2008), visiting student from Università della Calabria, Italy
- Bossi, Eugenia (Oct 2008), visiting student from Università della Calabria, Italy
- Pellerin, Romain. (Jun-Sep 2008), visiting student from Conservatoire Nationale des Arts et Métiers, France
- Cupellini, Enrico (Jul-Aug 2007), visiting student from Università della Calabria, Italy
- Usher, John (2003-2004), Ph.D. student, Faculty of Music, McGill University
- Mohammadi, M. (Feb-Aug 2004). visiting student from Sharif University, Iran

I served as external reviewer or examiner of the following theses:

Meta Exhibit 1002
Meta v. Mullen - Page 00156

- Mauricio Fontana de Vargas, School of Information Studies, McGill University (2022)
- Richard Olayniyan, Department of Computer Science, McGill University (2021)
- Xavier de Tingu, Université Rennes, France (2020)
- Damien Brun, Le Mans Université, France (2020)
- Cheryl Savery, Queen's University (2014)
- Alexandre Plouznikoff, École Polytechnique de Montréal (2009)
- Xiaoyong Sun, School of Information Technology and Engineering, University of Ottawa (2007)
- Nicolas Bouillot, Conservatoire Nationale des Arts et Métiers, France (2006)
- Harold Okai-Tettey, Computer Science, Rhodes University, South Africa (2006)

I served on the supervisory and/or examination committees of the following students:

- Department of Electrical and Computer Engineering: Edouard Antoniou, Oliver Astley, Carmen Au, Marc Boulé, Wei Chu, Olivier St-Martin Cormier, Vincent Levesque, Muhua Li, Rui Ma, Dante De Nigris Moreno, Jun Ouyang, Jerome Pasquero, Andrew Phan, Ala Qumsieh, Harkirat Sahambi, Wei Sun, Yick Kei Wong, Dingrong Yi, Olivier St-Martin Cormier, Karl Fayad, Shalaleh Rismani, Lixiao Zhu, Amir Abbas (2023), Haji Abolhassani (2024)
- Department of Mechanical Engineering: Zahir Albadawi, Omar Wyman, Ehsan Yousefi
- Department of Biological and Biomedical Engineering: Alireza Heidari
- School of Physical and Occupational Therapy: Jackie Girgis
- School of Information Studies: Xiaofeng (Allan) Yong
- Faculty of Music: Jason Corey, Cory McKay, Caroline Medeiros, Sean Olive, Dale Stammen, Vanessa Yarmechuk, Mark Zadel
- Grad. School of Library and Information Studies: Charles-Antoine Julien
- Department of Educational Psychology and Counselling: Adam Finkelstein
- School of Computer Science: Paul Haroun, Wisam Al Abed

Meta Exhibit 1002
Meta v. Mullen - Page 00157

Masters Students

Name	Period	Thesis title	Present Position
Wang, Melody	Jan 2025–	TBD	
Jabbari, Kasra	Jan 2025–	TBD	
Pan, Edina	Sep 2024–	TBD	
Li, Yuancao	Sep 2024–	TBD	
Dhanania, Mansi[◇]	Sep 2024–	TBD	
Buller, Abigail[◇◇†C]	Sep 2023–	Haptic displays for multi-patient vital sign monitoring	
Karve, Anay	Sep 2023–	ADvanced AIRspace Usability	
Naik, Khushi	Sep 2023–	Graphical displays for multi-patient vital sign monitoring	
Zou, Yichen	Sep 2023–	Bionic Ear	
Li, Heyang[§]	Jan 2023–	Emotion recognition and expression for ADiNA	
Fu, Jano	Jan 2023–	Dynamic multimodal chart representations for individuals who are blind	
Bazin, Romain	Sep 2022–Dec 2024	Leveraging Large Language Models for Automated Chart Summarization	
Quadros, Venissa Carol	Sep 2022–	Authoring of Audio-Tactile Content for Refreshable Tactile Displays	
Aubet, Antoine	Sep 2022–	Computationally efficient dynamic spatial audio rendering for distributed musical performance	
Liu, Yujing	Sep 2021–2024	Design and Implementation of Conversational Humanoid Avatars for Healthcare Applications	

Continued on next page

Meta Exhibit 1002
Meta v. Mullen - Page 00158

Name	**Period**	**Thesis title**	**Present Position**
Wilson, É.	Sep 2021–Sep 2024	Representations for the Blind of Depth Information in Photographs	Technical Product Coordinator, Haply Robotics
Duarte, Nathan◇◇	Sep 2021–Aug 2023	Deploying wearable sensors for pandemic mitigation	Senior Associate, Boston Consulting Group
Henry, Max	Sep 2021–	Spatial-aware audio rendering for immersive telepresence	
Lewis-Lane, Jonathan	Sep 2021–Aug 2023	Haptic Interfaces for Musical Notation and Expression	Haptics Engineer, Apple Computer
Akut, Rohan	Jan 2021–Jul 2023	Enriching AI-based Image Descriptions for People who are Vision-Impaired	Machine Learning Engineer, iCAD Dental
Gannavarapu, S.	Sep 2020–Dec 2023	Haptic Perception and Multimodal Maps for the Visually Impaired	
Isran, Rayan	Sep 2020–Aug 2023	Investigating Audio-Haptic Rendering Methods To Deliver Chart Information to Blind and Low-Vision Individuals	Mechatronics Software Engineer, Bombardier Recreational Products
Kirby, Linnea	Sep 2020–	The Implications of Technology-Augmented Circus in Training, Performance, and Interdisciplinary Research	
Knappe, Sabrina	Sep 2020 – Dec 2022-	Towards a User Interface for Audio-Haptic Exploration of Internet Graphics by People who are Blind and Partially Sighted	Ph.D. student (see above)
Regimbal, J.	Sep 2020 – Aug 2021	Haptic effects authoring in artistic and utilitarian contexts	(fast-tracked to Ph.D. program)

Continued on next page

Meta Exhibit 1002
Meta v. Mullen - Page 00159

Name	**Period**	**Thesis title**	**Present Position**
Ducher, Clara	Sep 2019 – Sep 2021	GAN-based interaction paradigms for photorealistic avatar creation (McGill nominee for Northeastern Association of Graduate Schools Distinguished Thesis Award)	Research Software Engineer, European Centre for Medium-Range Weather Forecasts
Marino, David	Sep 2019 – Nov 2021	Implicitly Conveying Emotion While Teleconferencing	R&D Scientist, Hitachi Energy, Montreal
Lee, Hyejin	Sep 2019 – Apr 2022	Generating Convincing Simulation of Internalized Voices for Human-avatar Interaction	Full-stack developer, Société Générale, Montreal
Li, Yaxuan	Sep 2019 – May 2022	Towards Context-aware Automatic Multimodal Haptic Effect Generation for Home Theatre Environments	Ph.D. student, U. Michigan
Bouanane, Y.	Jan 2019 – Dec 2020	EchoDepth: Using a depth camera and sonification for blind navigation	Entrepreneur, sktch.io
Demers, Marc	Sep 2018 – Mar 2021	A Data-Driven Strategy for Evaluating Tacton Perceptual Similarity	Data Scientist, Maxen Technologies
Vyas, Preeti	Sep 2017 – Apr 2020	Foot-based Haptic Interfaces for Numeric Information Delivery and Dance Learning	Ph.D. student, UBC
Sulmont, E.	Sep 2017 – Dec 2018	Improved Learning of Machine Learning by Non-Majors	Curriculum Manager, DataCamp
Patil, Gandharv	Jan 2017 – Dec 2019	Min-Max Inverse Reinforcement Learning for learning bi-modal dialogue policies	Ph.D. student, McGill
Girgis, Roger	Sep 2016 – Apr 2019	Assessing the Use of Deep Learning in Assisting Visually Impaired People with Outdoor Exploration	Ph.D. student, MILA

Continued on next page

Meta Exhibit 1002
Meta v. Mullen - Page 00160

Name	**Period**	**Thesis title**	**Present Position**
Kim, Taeyong	Sep 2016 – Aug 2019	Exploration of foot based interaction for menu control and virtual reality applications	HRI Researcher, Hyundai Robotics
Alirezaee, P.	Sep 2016 – Dec 2019	Multimodal approaches to improved hospital alarms	Product Designer, Unity Technologies
Diaz, Manfred	Sep 2016 – Aug 2017	Interactive and Uncertainty-Aware Imitation Learning	Ph.D. student, MILA
Ahmer, Z.	Jan 2016 – Jan 2019	Automated musical accompaniment to children's stories	
Yin, G.	Sep 2015 – Oct 2018-	Augmented Reality Tools for Workplace Safety	Software Engineer, Kooltra
Fortin, P.	Sep 2015 – Aug 2016	Physiological Perception of Tickling Sensation	(fast-tracked to Ph.D. program)
Horodniczy, D.†	Sep 2014 – Dec 2016	Characterization and Application of a Variable-Friction Foot Device	Software Developer, Philips Innovative Imaging Technologies
Vuibert, Vanessa	Sep 2013 – Aug 2015	Efficient and Accurate Performance with Unconstrained Mid-air Interaction	Software Developer, Guavus
Hieda, Naoto	Sep 2012 – Aug 2015	Digital Video Projection for Interactive Entertainment	PhD student, Tallinn University, Estonia
Viswanathan, R.	Jan 2010 – Dec 2012	Testing the Two-Stream Hypothesis in an Immersive Virtual Environment	Senior Software Developer, Faurecia Irystec Inc
Knight, Trevor	Jan 2010 – Sep 2011	Music Visualization for Open Orchestra (CIRMMT Student Award)	Software Developer, Noteloop Systems
Li, Weizhong	Sep 2008 – May 2009	(recommended alternative supervision)	

Continued on next page

Meta Exhibit 1002
Meta v. Mullen - Page 00161

Name	**Period**	**Thesis title**	**Present Position**
Ip, Jessica	Sep 2008 – Mar 2011	Augmented Reality for Interactive Play in a Virtual and Physical Environment	iOS developer, Shopify, Toronto
Namit, Gaurav	May 2008 – Oct 2009	(withdrew in 2009 to pursue social entrepreneurship venture)	
El-Shimy, D.	Sep 2007 – Dec 2008	Gestural interaction for complex tasks	(fast-tracked to Ph.D. program)
Law, A.	Sep 2007 – Sep 2010	A Vibrotactile Floor for Enabling Interaction through Virtual Walking Spaces	Data Systems Engineer, AECOM, Vancouver
Benovoy, M.	Sep 2006 – Oct 2007	Biosignals analysis and its application in a performance setting	(fast-tracked to Ph.D. program)
Audet, Samuel†	2005-2007	Shadow Removal from Multi-Projector Displays via Three-Dimensional Modeling and Object Tracking	Deeplearning4j (Skymind), Tokyo, Japan
Wozniewski, M.	2003-2006	A framework for interactive three-dimensional sound and spatial audio processing in a virtual environment	research engineer, Societé des arts technologiques, Montreal
Rudzicz, Frank§	2004-2006	CLAVIUS: Understanding Language Understaing in Multimodal Interaction	Associate Professor, University of Toronto (status) and Dalhousie University
Rioux, Francois†	2003-2005	Software Framework for Parsing and Interpreting Gestures in a Multimodal Virtual Reality Context	Ph.D., Laval; Software Architect, Thales Canada
Chan, Siu-Chi	2002-2005	Hand and Fingertip Tracking for Gesture Recognition	Technical Staff, AMD Toronto
Hilario, Nadia§	2002-2005	Occlusion Detecion in Front Projection Environments	Software Developer, Spiria

Continued on next page

Meta Exhibit 1002
Meta v. Mullen - Page 00162

Name	**Period**	**Thesis title**	**Present Position**
Perez, Michael	2002-2005	Multimodal Human-Computer Interaction for a Public Kiosk System	User Interface Designer, Nuance
Sud, Daniel	2002-2005	Design of a Multi-Projector Display System	Senior Producer, Lucky Hammers
Boussemart, Y.	2002-2005	Design and Implementation of Framework for Immersive Environments in a Shared Context	Chief Technology Officer, Xerxes Global
Pelletier, S.	2001-2003	High-Resolution Video Synthesis from Mixed-Resolution Video Based on the Estimate-and-Correct Method	(see above)
Gu, Jinhua	2000-2002	A distributed software architecture for the Shared Reality Environment.	VP, Radian Asset Assurance Inc., NY
Yao, Jie	2000-2002	Human Arm Gesture Detection and Recognition in a Classroom Environment.	Ph.D. student, Concordia University
Zhang, Yuan	2000-2002	An efficient coding method for spatial data: the rotating, hierarchical, overlapping representation.	Ph.D. student, University of Delaware
Doutriaux, S.	1998-1999	(withdrew in 1999 to launch start-up company)	
Arseneau, S.	1998-2000	Robust Image Segmentation Towards an Action Recognition Algorithm.	(see above)
Xu, Aoxiang	1998-2000	A High-Performance Audiovisual Communication System.	QNX Software Systems, Ottawa

† NSERC PGS M Scholar recipient
†C NSERC CGS M Scholar recipient
§ FRQNT Graduate Scholarship recipient
◇ McCall MacBain Scholar finalist
◇◇ McCall MacBain Scholarship recipient

Additional Masters Supervisory Service

I co-supervised a portion of the thesis work of the following students:

- Marcé, Clément (Jul-Aug 2024), visiting student from INSA (Toulouse)

Meta Exhibit 1002
Meta v. Mullen - Page 00163

- Albert, Nicolas (Jan-Jun 2024), visiting student from École Polytechnique Fédérale de Lausanne, Switzerland
- Peña Cortés, Dafne Vania (Nov 2023-present), School of Engineering and Sciences, Tecnológico de Monterrey, Mexico
- Dever, Ani (Sep 2017-Feb 2018), visiting student from Polytechnic University of Turin, Italy
- Gallo, Nicola (Sep 2015-Feb 2016), visiting student from Polytechnic University of Turin, Italy
- Roy, Louise (Jul-Dec 2015), visiting student from Ensimag, Grenoble, France
- Glesser, David (Feb-Jun 2012). visiting student from Ensimag, Grenoble, France
- Penin, O. (Jul-Aug 2011). visiting student from Paris-Sud 11, France
- Mabire, N. (Apr-Sep 2010). visiting student from Supélec, Metz, France
- Brulé, M. (Feb-Aug 2009). visiting student from Université de Louis Pasteur, Strasbourg, France
- Anlauff, J. (Dec 2008-Mar 2009). visiting student from Bielefeld University, Germany
- Delattre, G. (Apr-Aug 2007). visiting student from Université Paris VI, France

I served on the supervisory and/or examination committees of the following students:

- Zhonghao Zhao (M. Eng. project), Electrical and Computer Engineering, McGill University
- Anne-Marie Burns, Faculty of Music, McGill University
- Frank Riggi, Electrical and Computer Engineering, McGill University
- Eric Benzacar, Electrical and Computer Engineering, McGill University
- Oles Protsiym, Faculty of Music, McGill University

Meta Exhibit 1002
Meta v. Mullen - Page 00164

Funding

Individual Research Grants and Contracts

Date	Source	Amount	Title/Description
2024-2029	NSERC	$275,000	*Multimodal information communication to overcome environmental, sensory, and computer mediation limitations* Discovery grant
2024	HBHL/ HumanWare	$270,867	*Advancing IMAGE Support for the HumanWare/APH Monarch* Healthy Brains, Healthy Lives (CFREF) + McGill I+P with partner organization HumanWare
2024-2025	MEDTEQ/ NSERC	$268,115	*Improving Intelligibility of Speech in Noisy Environments* MEDTEQ Partenar-IA and NSERC Alliance funding
2023	Humanware	$33,600	*Prototype experience for IMAGE content on the Monarch* Research contract
2023-2024	MEDTEQ/ HBHL	$282,188	*Haptic devices for conveying non-textual visual information on the internet for individuals with vision loss.* MEDTEQ Partenar-IA (Ministère de l'Économie, de l'Innovation et de l'Énergie) and Healthy Brains, Healthy Lives (CFREF)
2022	HBHL	$50,000	*Extending Internet Multimodal Access to Graphical Exploration.* Healthy Brains, Healthy Lives (CFREF) Neuro Commercialization Ignite Grant
2022	Meta	$30,000	Unrestricted gift
2021	Mitacs	$13,333	*Analyse et recherche d'optimisation d'un processus d'adaptation de contenu issu de la numérisation 3D à un contenu photo-réaliste et interactif.* Mitacs Accelerate – Intern: Chen, Hongjun
2021-2022	ISED	$608,594	*Enabling Access to Graphical Image Content Published via the Internet for People Who Are Blind, Deaf-Blind or Visually Impaired.* Innovation, Science and Economic Development Canada (ISED), Accessible Technology Program (Total project budget of $765,787)
2019-2021	NSERC/ MEDTEQ	$374,366	*Mixed-Reality Platform for Simulation and Synthesis of Multi-Modal Hallucinations with Applications to Schizophrenia Treatment.* Collaborative Research and Development Grant with Industrial Partners, iMD Research and IA Précision Santé Mentale
2019	NSERC	$25,000	*360 degree imaging for navigation assistance for the visually impaired.* Engage Grants Program with Industrial Partner, ImmerVision.

Continued on next page

Meta Exhibit 1002
Meta v. Mullen - Page 00165

Date	Source	Amount	Title/Description
2019	Mitacs	$15,000	*Advanced sensor control implementations for energy optimization in commercial buildings using machine learning and data visualisation applied to building automation systems.* Mitacs Accelerate – Intern: Demers, Marc
2019	Mitacs	$6,000	*Facilitating Human Interaction with a Robotic Exercise Coach using Smart Objects.* Mitacs Globalink – Intern: Vyas, Preeti
2018	Mitacs	$6,000	*Mobile Remote Implicit Communication.* Mitacs Globalink: Intern: Blum, Jeff
2018	NSERC	$25,000	*Educational wine recommendations from initially sparse data.* Engage Grants Program with Industrial Partner, Wineout Inc.
2017-2018	McGill	$7500	*Physiological confirmation of stimulus reception.* Faculty of Engineering TechAccelR Grant
2017-2020	NSERC	$631,650	*Wearable Haptics.* Collaborative Research and Development Grant with InterDigital Corporation
2017-2018	CIRA	$44,500	*Intelligent Agent for the Visually Impaired: Vision-based scene description and contextual awareness for Autour.* Canadian Internet Registry Authority .CA Community Investment Program
2017-2022	NSERC	$ 222,000	*Multimodal Influences on Perception and Action in Computer-Mediated Environments.* Discovery grant.
2017-2018	MSP	$177,673	*Social Media Monitoring Architecture.* Research Contract with Ministère de la Sécurité publique
2015	CIRA	$53,878	*What's Around Me? Conveying Environmental Awareness to the Visually Impaired Community.* Canadian Internet Registry Authority .CA Community Investment Program
2014-2015	Mitacs	$15,000	*Effect of Mobile Technologies in Emergency Response.* Mitacs Accelerate – Intern: Erfani-Joorabchi, Minoo
2014	NSERC	$25,000	*Haptic user experience delivered through the shoes.* Engage Grants Program with Industrial Partner, InterDigital Canada
2013-2014	NSERC	$137,474	*3D immersive projection infrastructure with full-body motion capture and analysis.* Research Tools and Instruments Grants
2012-2013	Mozilla	$50,000	*Real-Time Emergency Response.* Mozilla Ignite Development Challenge (in partnership with the National Science Foundation)
2012-2017	NSERC	$210,000	*Improved Shared Reality for Multi-Party, Multimodal Simulation and Interaction.* Discovery grant.

Continued on next page

Meta Exhibit 1002
Meta v. Mullen - Page 00166

Date	Source	Amount	Title/Description
2012	Toyota	$30,000	*Haptic interaction with an augmented steering wheel.* Toyota Infotechnology Centre
2011	HP	$60,950	*Capturing attention via spatialized audio cues.* HP Labs Innovation Research Program (IRP)
2011	NSERC	$25,000	*Improved Parallax Barrier Autostereoscopic Display Software.* Engage Grants Program with Industrial Partner, Holoptick Technologies Inc.
2010-2011	Google	$50,000	*A Spatialized Audio Map System for Mobile Blind Users.* Google Faculty Research Awards.
2010-2011	Honda	$30,000	*Facial Expression Recognition for Machines.* Honda Research Institute.
2010	UVic	$8,000	*NEPTUNE Pleora streamer.* University of Victoria software license
2008-2012	MDEIE	$367,195	*Natural Interactive Walking.* Support for International Research and Innovation Initiatives, Ministère du Développement économique, de l'Innovation et de l'Exportation; for Canadian participation in EU FP-7 program with partners in France, Italy, and Denmark.
2007-2010	MDEIE	$15,000	*Un environment virtual pour la création de musique et de son à partir de systèmes chaotiques.* Support for International Research and Innovation Initiatives, Ministère du Développement économique, de l'Innovation et de l'Exportation.
2006-2009	NSERC	$317,785	*A pervasive multi-user augmented space for mobile immersive interaction with sound and music.* (additional funding for artist collaborator received from Canada Council for the Arts) New Media Initative STPGP 337999-06.
2006-2011	NSERC	$100,000	*Enhanced video for shared reality environments.* Discovery grant.
2004-2006	NSERC	$136,600	*Soundscape performance works via interactive environment for immersive audiovisual scene generation.* (additional funding for artist collaborator received from Canada Council for the Arts) New Media Initative NMIPJ 307934-04.
2002-2006	NSERC	$100,000	*Shared Reality Interaction over High Bandwidth Connectivity.* Discovery grant.
2000	LUB	$100,000	*Distributed Visualization Environment.* Laboratoire universitaire Bell Equipment Grant.

Continued on next page

Meta Exhibit 1002
Meta v. Mullen - Page 00167

Date	Source	Amount	Title/Description
1999-2000	Petro-Canada	$20,500	*Interactive Web Tools for Critique of Presentation Skills and Evaluation of Student Learning.* Young Innovator Award.
1999-2002	FCAR	$45,000	*Augmenting an Electronic Classroom for Improved Instructor-Student Interaction.* New Researchers Award.
1999	FCAR	$15,700	*Augmenting an Electronic Classroom for Improved Instructor-Student Interaction.* Equipment Grant.
1999	AES	$25,000	*Multichannel audio over Internet.* Audio Engineering Society.
1999	OSC	$15,000	*Timespace Exhibit.* Ontario Science Center contract.
1999	MFM	$10,000	*Intelligent Classroom tools.* McGill Faculty of Management.
1998-2002	NSERC	$76,000	*Reactive Hospital Environment.* Discovery research grant.
1998	FGSR	$20,000	McGill Graduate Studies and Research Development Fund

Meta Exhibit 1002
Meta v. Mullen - Page 00168

Team Research Grants and Contracts

(Percentages refer to my portion.)

Date	Source	Amount	Title/Description
2024	Societé inclusive	$35,000 (?%)	*Perceptions des utilisateurs ayant une déficience visuelle concernant l'utilisation des électroménagers et la nécessité d'améliorer la connaissance ou l'expérience utilisateur pour des innovations futures* Societé inclusive, Programme de recherche participative intersectorielle (with F. Poncet)
2023	Mitacs	$150,000 (70%)	**Avatar Care Provider for Seniors Residences* Mitacs Accelerate (with K. Moffatt)
2022-2025	CRIAQ	$1,318,171 (35%)	†NSERC Alliance with Consortium for Aerospace Research and Innovation of Québec (CRIAQ) *ADvanced Airspace Usability (ADAIR)* (with P. Doyon-Poulin (Poltechnique), Joon Chung (Ryerson), and 6 aerospace industrial partners)
2020-2021	CIRMMT	$1,500	*Agile Seed Funding for *Conveying paralinguistic cues and context while teleconferencing* (with students David Marino, Max Henry and Pascal Fortin)
2017-2018	SSHRC	$199,680 (10%)	†*Real time impact signalling and collective goods* Partnership Development Grant (with R. Janda and 6 co-investigators)
2016-2017	NAKFI	$100,000 (20%)	*Empathy Mirror* National Academies Keck *Futures Initiative* Art and Science, Engineering and Medicine Grant (with B. Korgel and 3 co-applicants)
2015-2018	FRQNT	$182,880 (25%)	†*Étude des modèles d'interactivité humain-robot en réalité mixte afin de réduire l'apparition des troubles musculo-squelettiques en utilisant une cellule de travail hybride* Recherche en équipes (with M. Otis and 6 co-applicants)
2014	Mozilla	$20,000 (90%)	**Augmented Reality Tools for Improved Training of First Responders* Mozilla Gigabit Community Fund (with R. Dearden)
2011	CIRMMT	$10,000 (90%)	**Acoustic Sculptures* CIRMMT Strategic Innovation Fund Award (with A. Olmos and 3 others)
2010-2011	NSERC	$49,815 (90%)	**Novel Portable Treatment Device for Lazy Eye* Idea to Innovation (I2I) Booster (Phase Ib) (with R. Hess)

Continued on next page

Meta Exhibit 1002
Meta v. Mullen - Page 00169

Date	Source	Amount	Title/Description
2009-2011	MSG	$200,000 (80%)	**Location-Based Spatialized Audio Interaction for the Blind and Visually Impaired* Programme Appui au passage à la société de l'information (Support for the transition to an information society program), Ministère des Services gouvernementaux (MSG) (with M. Wozniewski and Z. Settel)
2010-2014	CHRP	$327,000 (?%)	*Computational and statistical tools for image guided neurosurgery of brain tumors* NSERC Collaborative Health Research Projects (with L. Collins and 7 others)
2009-2010	CCSIP	$48,000 (4%)	**Digitally Merged Environments* California-Canada Strategic Initiatives Program (with S. Brown, UCSD and 20 co-applicants)
2009-2011	Canarie	$927,648 (40%)	*†Open Orchestra* Network-Enabled Platforms 2 (with J. Roston and W. Woszczyk)
2010-2014	NCE	$23,000,000 (2%)	*†GRAND: Graphics, Animation and New Media* Networks of Centres of Excellence (With K. Booth and 49 others)
2009	DND	$47,500	*†Video-Based Facial Recognition–Algorithm and Demonstration* Department of National Defence Contract (with M. Levine)
2008-2009	NSERC	$120,250 (90%)	**Novel Portable Treatment Device for Lazy Eye* Idea to Innovation (I2I) (with R. Hess)
2008-2010	Canarie	$1,397,758 (7%)	*NEPTUNE: A Platform to Create and Support Ocean Science Virtual Organizations* Network-Enabled Platforms (with B. Pirenne and J. Roston)
2008-2010	Canarie	$2,000,000 (18%)	*Health Services Virtual Organization* Network-Enabled Platforms (with R. Ellaway and 8 others)
2008-2010	NSERC	$196,000 (50%)	**3-D Visualization and gestural interaction with multimodal neurological data* Strategic Projects (with 5 others)
2006-2009	FRQNT	$146,550 (50%)	**Unités agenceables: Reseau d'Environnements Immersifs pour Collaboration à Distance* Recherche en équipes (with X.-W. Sha)
2005-2006	Canarie	$825,000 (50%)	*Undersea Window–High Definition Video Online* Intelligent Infrastructure Program. (with J. Roston)
2005-2006	SAT	$1,276,000 (1%)	*TOT2: Nouveau Territoires de la Création-Diffusion en Réseau* Heritage Canada New Media Research. (M. Savoie, PI)
2004-2006	Canarie	$568,971 (33%)	*Shared Spaces – High Definition Ultra-Videoconferencing* Advanced Applications Program. (with J. Roston)
2003-2004	SAT	$792,082 (1%)	*TOT1: Nouveau Territoires de la Création-Diffusion en Réseau* Heritage Canada New Media Research. (M. Savoie, PI)

Continued on next page

Meta Exhibit 1002
Meta v. Mullen - Page 00170

Date	Source	Amount	Title/Description
2002-2005	IRIS	$573,000 (25%)	**Parallel Distributed Camera Arrays for Intelligent Environments* (with J. Clark, S. Fels, R. Vertegaal)
2002-2005	VRQ	$2,180,000 (20%)	*Real-time Communication Of High-res. Multi-sensory Content via Broadband Networks.* Valorisation-Recherche Quebec (with W. Woszczyk and others)
2001-2002	Canarie	$391,000 (30%)	*Remote Video Sign-Language Interpreting.* Advanced Networking Apps. Services & Technologies. (with J. Roston and others)
2000-2002	Canarie	$808,000 (35%)	*McGill Advanced Learnware Project.* Advanced Networking Applications Services and Technologies. (with B. Pennycook)
2000-2003	LUB	$150,000 (50%)	**Distributed Shared Visualization Environment.* Laboratoire universitaire Bell. (with B. Ozell)
2000-2001	Royal Bank	$2,000 (80%)	**Improving Teaching through an Interactive Critiquing System.* Teaching Improvement Fund Award. (with R. Harris and J. Blatter)
1999-2002	CFI	$400,000 (50%)	†*The Shared Reality Environment.* New Opportunities Award. (with J. Clark)
1999-2000	Royal Bank	$10,000 (80%)	**Interactive Web Tools for Critique of Presentation Skills and Evaluation of Student Learning.* TIF (with R. Harris)

*Indicates grants on which I am project leader. †Grant on which I am co-investigator.

Meta Exhibit 1002
Meta v. Mullen - Page 00171

Centre Research Grants

Date	Source	Amount	Title/Description
2022-2026	ILLS	$400,000	FRQNT International Laboratory on Learning Systems, funded jointly by CNRS (France) and FRQNT (Quebec), Pablo Piantanida, PI, $100,000 per annum
2021-2028	FRQSC/ FRQNT	$2,712,295	Regroupement Stratégique: *Centre Interdisciplinaire de Recherche en Musique, Médias et Technologie.* (with I. Cossette and 52 others) $276,000 per annum for 2 years and $432,059 per annum for the remainder
2019-2025	FRQNT	$2,160,000	Regroupement Stratégique pour *Systémes cyberphysiques et intelligence machine matérialisée (REPARTI).* (with C. Gosselin and 49 others) $480,000 per annum.
2015	CFI	$4,366,723	Innovation Fund: *Live Expression "in situ": Musical and Audiovisual Performance and Reception* (with M. Wanderley and 9 others)
2014-2021	FRQSC/ FRQNT	$1,800,000	Regroupement Stratégique: *Centre Interdisciplinaire de Recherche en Musique, Médias et Technologie.* (with M. Wanderley and 23 others)
2013-2019	FRQNT	$2,160,000	Regroupement Stratégique pour *l'Étude des Environnements PARTagés Intelligents répartis (REPARTI).* (with D. Laurendeau and 34 others) $359,943 per annum.
2008-2014	FRQSC/ FRQNT	$1,800,000	Regroupement Stratégique: *Centre Interdisciplinaire de Recherche en Musique, Médias et Technologie.* (with S. McAdams and 23 others)
2007-2009	NSERC	$57,630	Major Resources Support: *Centre for Interdisciplinary Research in Music Media and Technology (CIRMMT).* (with S. McAdams and 8 others)
2006-2013	FRQNT	$1,530,000	Regroupement Stratégique pour *l'Étude des Environnements PARTagés Intelligents répartis (REPARTI).* (with D. Laurendeau and 23 others) $100,000 per annum allocated to CIM.
2002-2005	FCAR	$720,000	Regroupement Stratégique: *Réseau Québecois de Recherche en Réalité Artificiellle Distribuée (QUERRAnet).* (with F. Ferrie, R. Bergevin, P. Cohen, and others)
2001	CFI	$6,500,000	Major Facilities Award: *Centre for Integrated Research in Music Media and Technology.* (with W. Woszczyk and 11 others)
2000-2002	FCAR	$113,500	Centre de Recherches. (with F. Ferrie and 17 others)

Continued on next page

Meta Exhibit 1002
Meta v. Mullen - Page 00172

Date	Source	Amount	Title/Description
2000	NSERC	$275,000	*Information Systems in Support of Intelligent Machine Research.* (with F. Ferrie and 17 others)

Meta Exhibit 1002
Meta v. Mullen - Page 00173

Teaching

Courses Taught

Course title and number	Description	Semester
ECSE-618 *Haptics*	Graduate course on haptic information design, co-taught with other instructors across Canada, under the informal designation of HAPTICS 501	Winter 2021–present
ECSE-421 *Embedded Systems*	Undergraduate course dealing with both the theory and practice of design for embedded systems	2018–present
ECSE-526 *Artificial Intelligence*	Graduate level course in artificial intelligence with emphasis on machine learning and autonomous agents	1998–present
*ECSE-683 *Topics in Vision and Robotics*	Graduate level laboratory course for RoboCup projects	Fall 2000 Fall 2002
*ECSE-424/542 *Human-Computer Interaction*†	Undergraduate (424) and graduate (542) course in human-computer interaction with emphasis on new interface paradigms	2000–present
ECSE-487 *Computer Architecture Laboratory*	Undergraduate laboratory course	1999–2018
ECSE-427 *Operating Systems*	Undergraduate course (core for Computer Engineering students)	1998
CSC-270 *Introduction to Modelling and Optimization*	Computer Science undergraduate course, University of Toronto	1993–1994
CEE 1714Y *Digital Systems and Computers*	Continuing Engineering Education course for the Association of Professional Engineers of Ontario	1993–1994
CSC-228 *File Structures and Data Management*	Computer Science undergraduate course, University of Toronto	1992–1995

Continued on next page

Meta Exhibit 1002
Meta v. Mullen - Page 00174

Course title and number	**Description**	**Semester**
COSC-3411 *File Structures and Data Management*	Computer Science undergraduate course, York University	1992

*Indicates new course that I created.
†In 2011, a project from this class placed third in the Usability Professionals Association International Student Design Competition. Note that graduate students have also enrolled in this course under the designation of ECSE-681, *Colloquium in Electrical Engineering* or ECSE-689, *Recent Advances in Electrical Engineering*.

Meta Exhibit 1002
Meta v. Mullen - Page 00175

Undergraduate Supervision

ECE Honors Undergraduate Projects (2 semesters)

Name	Year	Research topic
Bu, Bruce	2020	360° Imaging for Navigation Assistance for the Visually Impaired
Akgul, Ahmet	2017-2018	Haptic Wearables
Bashar, Sharhad	2016-2017	Image-based environment description
Wu, Pei Yuan (Richard)	2016	Mixed-Reality Human-Machine Interaction
Gordon, Adam	2011-12	Virtual Presence
Warraich, Shahjahan	2010-11	Natural Interactive Walking
Lin, Nan	2008	Location sensing for mobile apps
Wang, Letao	2007	Interactive Agent
Charlebois, Pierre-Olivier	2004–2005	Sound Objects in a Soundscape
Myer, Sam	2003	Automated Music Transcription
El-Refaei, Sameh	1998–1999	Shared Reality simulator

ECE Undergraduate Design Projects (2 semesters)

Name	Year	Research topic
Archambault, Roxanne	2024-2025	Holoportation: CSA VR Astronaut Training
Dejanov, Aleksej	2024-2025	Holoportation: CSA VR Astronaut Training
Nguyen, Anh Tu	2024-2025	Holoportation: CSA VR Astronaut Training
Turianskyj, Alex	2024-2025	Holoportation: CSA VR Astronaut Training
Lu, Yu-An	2024-2025	AI Digital Nurse Avatar (ADiNA)
Chowdhury, Nazia	2024-2025	AI Digital Nurse Avatar (ADiNA)
Hall, Allison	2024-2025	AI Digital Nurse Avatar (ADiNA)
Gouchee, Annie	2024-2025	AI Digital Nurse Avatar (ADiNA)
Ajji, Maya	2024	AI Digital Nurse Avatar (ADiNA)
Rahman, Nafis	2024	AI Digital Nurse Avatar (ADiNA)
Wang, Jingyi	2024	AI Digital Nurse Avatar (ADiNA)
Zhang, Rong Wei	2024	AI Digital Nurse Avatar (ADiNA)
Srivastava, Atreyi	2024	AI Digital Nurse Avatar (ADiNA)
Ktaily, Nour	2024	AI Digital Nurse Avatar (ADiNA)
Bansal, Pratham	2024	AI Digital Nurse Avatar (ADiNA)
Cattani, Alex	2024	AI Digital Nurse Avatar (ADiNA)
Wang, Bohan	2024	Cybersight
Feng, Shuzhao	2024	Cybersight
Tian, Steven	2024	Cybersight
Wang, Yiqiao	2024	Cybersight
Bebee, Lukas	2023-2024	Force-feedback experiences for IMAGE

Continued on next page

Meta Exhibit 1002
Meta v. Mullen - Page 00176

Name	**Year**	**Research topic**
Alexander Tsahageas	2023-2024	Force-feedback experiences for IMAGE
Emma Kawczynski	2023-2024	Force-feedback experiences for IMAGE
Massimo Rosati	2023-2024	Force-feedback experiences for IMAGE
Gurhan, Eren	2023-2024	Vision-guided Navigation Assistance
Yan, Ke	2023-2024	Vision-guided Navigation Assistance
Calitoiu, Mihail	2023-2024	Vision-guided Navigation Assistance
Park, John	2023-2024	Vision-guided Navigation Assistance
Hu, David	2023	Vision-guided Navigation Assistance
Gasmi Ilyes	2023	Vision-guided Navigation Assistance
Habelrih Edward	2023	Vision-guided Navigation Assistance
Arabian Ari	2023	Vision-guided Navigation Assistance
Fathi, Saab	2023	Avatar therapy for psychosis
Ham, Sia	2023	Avatar therapy for psychosis
Choi, Myunghoon	2023	Avatar therapy for psychosis
Kruchinski Almeida, Martin	2023	Avatar therapy for psychosis
Kabir, Anika	2023	Chatting with historical figures
Huynh, Vy-Kha	2023	Chatting with historical figures
Solaberrieta, Emilia	2023	Chatting with historical figures
Cui, Bowen	2022-2023	Immersive multimodal CAVE experience
El Haddad, Georges	2022-2023	Immersive multimodal CAVE experience
Fazal, Gohar Saqib	2022-2023	Immersive multimodal CAVE experience
Mahajan, Madhav	2022-2023	Immersive multimodal CAVE experience
Pan, Edwin	2022-2023	Touching faces in VR
Gosman, Mircea	2022-2023	Touching faces in VR
Justin, Legrand	2022	Vision-guided Navigation Assistance
Sen, Wang	2022	Vision-guided Navigation Assistance
Chamberland, Noah	2022	Vision-guided Navigation Assistance
Natchev Keanu	2022	Novel digital representation of sign language
Arabian Matthias	2022	Novel digital representation of sign language
Destiné, Maxens	2022	Novel digital representation of sign language
Jarvis, Thomas	2022	Natural Dialog Generation for Mental Health
Kong, Norman	2022	Natural Dialog Generation for Mental Health
MacNaughton, Ben	2021-2022	plots data parsing for IMAGE project
Williams, Aidan	2021-2022	plots data parsing for IMAGE project
Nunez, Matteo	2021-2022	Foot-fluid interaction simulation in mobile VR
Comeau, Francis	2021-2022	Foot-fluid interaction simulation in mobile VR
Gure, Kaan	2021-2022	Foot-fluid interaction simulation in mobile VR
Calin, Haluk	2021-2022	ML-based Navigation Assistance
Cano, Victor	2021-2022	ML-based Navigation Assistance
Das Sharma, Kaustav	2021-2022	ML-based Navigation Assistance
Dufault, Louca	2021-2022	ML-based Navigation Assistance
Simard, Felix	2021	detecting benevolent sexism in text
Watson, Tyler	2021	detecting benevolent sexism in text

Continued on next page

Meta Exhibit 1002
Meta v. Mullen - Page 00177

Name	**Year**	**Research topic**
Porporino, Anthony	2021	detecting benevolent sexism in tex
Bourbeau, Charles	2021	detecting benevolent sexism in text
Ko, Neroli	2020-2021	haptic dance shoes
Zwack, Noah	2020-2021	haptic dance shoes
Zhang, Weijing	2020-2021	haptic dance shoes
Szwimer, Benjamin	2020-2021	visually impaired access to web graphics
Zoltak, Matthew	2020-2021	visually impaired access to web graphics
Itovitch, Ethan	2020-2021	visually impaired access to web graphics
Weiss, Ben	2020-2021	mixed-reality for schizophrenia treatment
Bieber, Nicolas	2020-2021	mixed-reality for schizophrenia treatment
Khan, Marwan	2020-2021	360° imaging for navigation assistance
Johansen, Anthony	2020-2021	360° imaging for navigation assistance
Gurkan, Mert	2020-2021	360° imaging for navigation assistance
Warsi, Osman	2020-2021	360° imaging for navigation assistance
Lague, Ethan	2019-2020	AR firefighter situational awareness tools
Masciotra, Alex	2019-2020	AR firefighter situational awareness tools
Philippon, Thomas	2019-2020	AR firefighter situational awareness tools
Bouchard, Tristan	2019-2020	AR firefighter situational awareness tools
Smith, Babette	2019-2020	AR and 360: camera-mediated future
Smith, Lilith	2019-2020	AR and 360: camera-mediated future
Chen, Jennie	2019-2020	Foot-fluid interaction simulation in mobile VR
Servera, Ryan	2019-2020	Foot-fluid interaction simulation in mobile VR
Wong, Tyrone	2019-2020	Foot-fluid interaction simulation in mobile VR
Bluethner, Lucas	2019-2020	Foot-fluid interaction simulation in mobile VR
Volodina, Yuliya	2019	360° camera scene understanding
Ritch, David	2019	360° camera scene understanding
Lam, Guillaume	2019	360° camera scene understanding
Nasseem, Veronica	2019	360° camera scene understanding
Amjad, Adeeb Ibne	2019	360° camera supported intersection-crossing
Amarouche, Hakim	2019	360° camera supported intersection-crossing
Tang, James	2019	360° camera supported intersection-crossing
Commodari, Stefano	2019	360° camera supported intersection-crossing
Regimbal, Juliette	2019	Haptic Wearables
Radi, Nusaiba	2019	Haptic Wearables
Berman, Isaac	2018	Vision-based crossing assistance
Mashaal, Stuart	2018	Vision-based crossing assistance
Liu, Shi Yu	2018	Vision-based crossing assistance
Legrand, Augustin	2018	Force Feedback for VR and AR
Fournier, Clément	2018	Force Feedback for VR and AR
Nith, Romain	2018	Force Feedback for VR and AR
Malik, Numan	2017-2018	Variable-Friction Surface Mechanism
Eshaq, Yousef	2017-2018	Variable-Friction Surface Mechanism
Alalawi, Beshr	2017-2018	Variable-Friction Surface Mechanism

Continued on next page

Meta Exhibit 1002
Meta v. Mullen - Page 00178

Name	**Year**	**Research topic**
Ahmed, Ridwan	2017-2018	Variable-Friction Surface Mechanism
Nichyporuk, Brennan	2017-2018	AI/vision-based Q&A Dialogue
Benseler, Nick	2017-2018	AI/vision-based Q&A Dialogue
Karatzas, Thomas	2017-2018	Wine recommendation engine
Zhilin, Oleg	2017-2018	Wine recommendation engine
Simard-Morissette, Olivier	2017-2018	Wine recommendation engine
Mirfallah Liarestani, N.	2017	Autour
Kim, Yong Beom	2017	Autour
Gibeault-Girard, Gabriel	2017	AR firefighter display
Velastegui, Nicolas	2017	AR firefighter display
V Cama, Carmen Aimee	2017	AR firefighter display
Dermont, Daniel	2016-2017	Haptic shoes
Makriogiorgos, A.	2016-2017	Haptic shoes
Rohlicek, Greg	2015-2016	Mobile telepresence
Carter, Stephen	2015-2016	Mobile telepresence
Zhang, Zhaowei	2015-2016	Haptic shoes
Huynh, Alex	2015-2016	Haptic shoes
Guzman, Juan	2015-2016	Video analytics
Ali, Hassan	2015-2016	Video analytics
Macario, Daniel	2015-2016	Automated event detection
Arané, Yarden	2015-2016	Automated event detection
Leighton, Brett	2015-2016	Automated event detection
Aird, Nicholas	2015-2016	AR firefighter display
Chen, Yuechuan	2015-2016	AR firefighter display
Lei, Simon	2015-2016	AR firefighter display
Mendonca, Justin	2015-2016	Firefighter IPS
Asfour, Justin	2015-2016	Firefighter IPS
Ward, Thomas	2015-2016	Firefighter IPS
Laramée, Alexandre	2015-2016	Firefighter IPS
Sahib, Shivan	2015-2016	Biosignal wearables
Nath, Saptaparna	2015-2016	Biosignal wearables
Bramson, Shawn	2013–2014	Mobile Telepresence
Larose, Andrew	2013–2014	Mobile Telepresence
Dirik, Alize	2013–2014	Mobile Telepresence
Mansour, Rita	2013–2014	Walking Straight
Elkerdi, Ghalia	2013–2014	Walking Straight
Redel, Josh	2012	Augmented Meeting Collaboration
Savchenko, Eugene	2010	3D interaction

Meta Exhibit 1002
Meta v. Mullen - Page 00179

ECE Undergraduate Design Projects (1 semester)

Name	Year
Himmelman, Tristan	2009
Ephraim, Theo	2009
Peck, Benjamin†	2008
Mankarios, Daniel	2007
Konstantinidis, Alex	2007
Pufahl, David	2005
Zhu, Ming-Zhang	2005
Chan, Keng Chi	2005
Phan, Andrew	2004
Saifee, Ali-Akber	2004
Shield, Robert	2004
Aubé, Francois	2004
Rudzicz, Frank	2003
Sarikaya, Deniz	2002
Vallianatos, K.	2002
Hassaine, Sofiane	2002
Wyse, Marisa	2001
Bancroft, David	2001

Name	Year
Glass, Emily	2001
Asselin, Ramy	2001
Sud, Daniel	2001
Gapakov, Timofei	2001
Rosenblatt, Avi	2001
Pekofsky, Gregory	2001
Kitisa, Anousack	2000
Vial, Thibaut	2000
Bernier, Martin	2000
Agha, Khurram Z.	2000
Bhattacharya S.	2000
Lavery, William	2000
Yeung, Jason	2000
Liao, Yuan Mei	1999
Yee, Amy	1999
Pereira, David	1999
Ciambella, Gary	1999
Kassouf, Nadim	1999
Lee, Garvin	1999

Name	Year
Li, (Shao-Gi) Chris	1999
El-Sharif, Osama	1999
Nasereddin, Hazem	1999
Virdi, Gurpratap	1999
Shah, Ali	1999
Djihanian, Sylvie	1999
Moussaoui, Khaled	1999
Dib Youssef	1999
Tam, H.	1999
Gagnon, Gabriel	1999
Tjhin, P.	1999
Luong, Mai	1999
Lau, Sau	1999
Tsai, Wanti	1999
Lerner, Sorin*	1999
Hochstein, Lorin*	1999
Pollack, Jonathan	1998
Nguyen, Bau	1998

*Co-supervised with James Clark
†Co-supervised with Paul Kry

Computer Science Undergraduate Projects (1 semesters)

Lakhwani, Sanjeev	Sep–Dec 2024	Musical Telepresence
Kandlikar-Bloch, Mira	Jun–Aug 2024	AI Digital Nurse Avatar
Gostovic, Lilith	Jan– Apr 2024	Visualizing Chronic Pain with Artificial Intelligence
Newman, James	Jan– Apr 2024	Visualizing Chronic Pain with Artificial Intelligence
Song, Juyeon Olivia	Jan– Apr 2024	Visualizing Chronic Pain with Artificial Intelligence
Chowdhury, Shadman	Jan– Apr 2024	Visualizing Chronic Pain with Artificial Intelligence
Liang, Tina	Jan– Apr 2024	Integrating Attention Detection with Human-Avatar Interaction
Nejad, Namdar	2022	Improving Accessible Representations of Web Graphics
Li, Dailun	2022	Training and Testing an Open-Source French TTS Model

Bioengineering Undergraduate Research Projects (1 semesters)

Wang, Angela	Sep–Dec 2024	Characterizing comfort of wearable band tightness

Meta Exhibit 1002
Meta v. Mullen - Page 00180

Mechanical Engineering Undergraduate Design Projects (2 semesters)

Sadaqa, Abdel-Rahman	2020-2021	Haptic illusions
Waite, Emilie	2020-2021	Haptic illusions
Shi, Rock	2020-2021	Haptic illusions
Fitz-Gerald, Thomas	2020-2021	Haptic illusions
Pollet, Nathan	2020-2021	Multimodal haptic armrest
Uzan, Emanuel	2020-2021	Multimodal haptic armrest
Ruivo Patricia	2020-2021	Multimodal haptic armrest
Abravanel Tal	2020-2021	Multimodal haptic armrest
Fowo, Clovis	2017-2018	Haptic interface for the feet
Robert, Gabrielle	2015-2016	Variable friction shoe
King, Michael	2013-2014	Variable Friction Foot-Ground Contact

Meta Exhibit 1002
Meta v. Mullen - Page 00181

Undergraduate Internships

Name	Year	Research project
Raza, Abbas	2024	(NYU Abu Dhabi research grant intern) Comparing speech and text interactions with automation in the cockpit
Castrillon Acosta, Isabel	2024	(Mitacs Globalink) Transforming speech into vibrations
Adnaan, Mohammad	2024	(Mitacs Globalink) Autonomous Navigation Assistance for the Visually Impaired
Mandampully, Samyuktha	2024	(Mitacs Globalink) Internet Multimodal Access to Graphical Exploration (IMAGE)
Lu, Calla	Jan–Apr 2024	Visualizing Chronic Pain with Artificial Intelligence
Sarellano, Andrés	Sep– Dec 2023	(Tec de Monterrey Undergraduate Research Trainee) Social Telepresence
Moreno Piedra, Balthazar	Sep– Dec 2023	(Tec de Monterrey Undergraduate Research Trainee) Social Telepresence
Tomiuk, Emma	2023	(ARIA Intern) Musical Telepresence
Gunatilaka, Movinya	2023	(Mitacs Globalink) Musical Telepresence
Lavoie, Gabrille	2023	(research trainee) Internet Multimodal Access to Graphical Exploration (IMAGE)
Bessonov, Vladimir	2023	(research trainee)
Phan Antoine	2023	(SURE student) Internet Multimodal Access to Graphical Exploration (IMAGE)
MacInnes, Gabrielle	2023	(SURE student) Internet Multimodal Access to Graphical Exploration (IMAGE)
Abderrahim, Ons	2023	(Mitacs Globalink) Autour
Glavas, Theodore	2023	(NSERC USRA) ChatGPT-based health assistants
Li, Hanzi	2022	(CS Intern) Internet Multimodal Access to Graphical Exploration (IMAGE)
Gutiérrez, Diego Macias	2023	(Mitacs Globalink) Haptic dance shoes
Cortes, Dafne Peña	2023	(Tec de Monterrey Undergraduate Research Trainee) Internet Multimodal Access to Graphical Exploration (IMAGE)
Shen, Xing	2022	(ECE Intern) Vision-Guided Navigation Assistance
Dutta, Riana	2022	(NSERC USRA) Internet Multimodal Access to Graphical Exploration (IMAGE)
Pan, Edwin	2022	(SURE Student) Touching Face in VR
Chen, Hongye	2022	(ECE Intern) Internet Multimodal Access to Graphical Exploration (IMAGE)

Continued on next page

Meta Exhibit 1002
Meta v. Mullen - Page 00182

Name	**Year**	**Research project**
Behal, Rahul	2021-2022	ML-based Navigation Assistance for the Visually Impaired
Rao Appala, Siddharth	2021	(Mitacs Globalink) Making internet graphics accessible through rich audio and touch
Contreras, Luis F. H.	2021	(Mitacs Globalink) Haptic device for sensory re-education application
Bhayana, Rachit	2021	(NSERC USRA) Conveying Paralinguistic and Non-Verbal Cues in Teleconferencing
Reszetnik, Grace	2021	(NSERC USRA) Avatar therapy for psychosis
Jiang, Cecilia	2021	(NSERC USRA) Avatar therapy for psychosis
Radi, Rakshitha	2021	(ECE Intern) Assistive Technology Project
Marshall, Kenji	2020-21	(ECE Intern) Avatar therapy for psychosis
Pollet, Nathan	2020	(SURE Student) 360° camera imaging
Bu, Bruce	2019	(SURE Student) Haptic Wearables
Chen, Jennie	2019	(SURE Student) Haptic Wearables
Zhang, Yukai	2019	(SURE Student) Haptic Wearables
Ratnakirti, Navneet	2019	(SURE Student) Sweatsponse
Al Taha, Feras	2018-2019	(NSERC USRA) Haptic Wearables
Nunez, Matteo	2018	(SURE Student) Haptic Wearables
Huang, Yixiang	2018	(SURE Student) Non-Intrusive Mobile Experience Sampling
Li, Zihang	2018	(Mitacs Globalink) Enhanced Remote Viewing Capabilities from a Camera Array
Kaoubi, Hadir	2018	(Mitacs Globalink) Autour: "What's around me?"
Ma, Jiantong	2018	Haptic Zoom
Tran, Jessica	2017	Social Media Monitoring
Xing, Emily	2017	Attention Switching Protocols in Family Conversations
Hao, Ju	2017	(Mitacs Globalink research intern) Haptic shoes
Lisus, Daniil	2017	(NSERC USRA) Natural Interactive Walking
Tran, Andrew	2016-2017	Multimodal CAVE integration
Sun, Nan Jin (Kelly)	2016-2017	Multimodal CAVE integration
Liu, Yufei (Kevin)	2016	Flexible graphical display of foot-ground interactions
Kashyap, Sumeha	2016	(Summer Intern from Indian Institute of Technology Guwahati) Walking Straight Project

Continued on next page

Meta Exhibit 1002
Meta v. Mullen - Page 00183

Name	**Year**	**Research project**
Hamed-Baghi, Bobak	2016	(SURE Student) Game Interaction for Haptic Shoes
Dubé, Felix	2016	(SURE Student) Haptic Shoes
Yang, Yanzhe	2015	(Mitacs Globalink) Enhanced Remote Viewing Capabilities from a Camera Array
Morency-Trudel, Juan	2015	(NSERC USRA) Spatialized audio for environmental awareness for the visually impaired
Liu, Bei Chen	2015	(SURE Student) Haptic in-sole design and implementation
Liu, Shuxuan (Dennis)	2015	Multimodal CAVE integration
Chaudhary, Yetesh	2014	Communication in Emergency and Crisis Response
Pavlasek, Jana	2014	(NSERC USRA) Natural Interactive Walking
Jiang, Mike	2014	(IAESTE student trainee) Graphics Rendering for Multimodal CAVE
Yin, Guofan	2014	(Mitacs Globalink) Enhanced Remote Viewing Capabilities from a Camera Array
Murgai, Prateek	2014	Acoustic Signal Processing
Sharma, Alok	2013-14	(BITS India Student) rt Emergency Response
Gupta, Sakshi	2013	(SURE Student from Indian Institute of Information Technology, Jabalpur) In-Situ Audio Services
Brais, Robert	2013	(NSERC USRA) Natural Interactive Walking
Gourdy, Oriane	2013	(Grenoble INP Student) 3DUI Interaction
Jain, Nehil	2011-12	(BITS India Student) In-Situ Audio Services
Sutcliffe, Andrew	2011	Haptically Augmented Steering Wheel
Greencorn, Dan	2011	Food Analysis Simulation
Redel, Josh	2011	Open Orchestra
Varenne, Dylan	2011	(Polytech Nice-Sophia), In-Situ Audio Services
Tomiyoshi, Marcio	2011	(ELAP Scholarship Student) Open Orchestra
Beniak, Stephane	2010	(NSERC USRA) Natural Interactive Walking
Salenikovich, Stepan	2010	Natural Interactive Walking
Chaw, Gary	2010	Natural Interactive Walking
Redel, Josh	2010	Health Services Virtual Organization
Smith, Severin	2009-11	Natural Interactive Walking

Continued on next page

Meta Exhibit 1002
Meta v. Mullen - Page 00184

Name	**Year**	**Research project**
Rajalingham, Rishi	2009	(NSERC USRA) Natural Interactive Walking
Rener, Farid	2009	(SURE Student) Natural Interactive Walking
Bae, Sung	2009	Optical Tracking for Audio Graffiti
Jathal, Kunal	2007	Haptic and auditory perception in human walking
Lin, Nan*	2006	(NSERC USRA) Interactive navigational control of robotic wheelchair
Reiter, Philippe	2005	(VP USRA Student) Distributed Video Rendering
Ariane Chan-You	2003	Region-of-Interest Control in Videoconferencing
Ariane Chan-You	2002	Videoconferencing Data Reduction
Gupta, Greeshma	2000	(NSERC Student) Automated slide converter
Cote, Christian	2000	(NSERC Student) Video transformations
Ayatizadeh, Negah	2000	Network communication daemons
Swartz, Tanya	2000	Speech-based TV-tuner interface
Cohen, Ouri	2000	Classroom 2000 access control
Yeong, Jason Aw	1999	(Work Study) Previously Asked Questions system
Agha, Khurram Zubair	1999	(Work Study) URL access tracking
Lim, Weoi Peng	1999	(Work Study) Graffiti board
Agha, Haroon Ali	1999	(Work Study) Classroom 2000 minipres. system
Klinger, Zamir	2000	(NSERC Student) Automated Door Attendant
Hooshangi, Sara	2000	(NSERC Student) Intelligent Classroom
Liao, Yuan Mei	1999	Electronic Classroom control interfaces
Luo, Jiexin	1999	PowerPoint C2000 interface and image libraries
Zhao, Changpeng	1998-99	Seamless PowerPoint upload for Classroom 2000
Lakdawalla, Azeem	1998-99	Real-time conjugate-gradient based head-tracking

*Co-supervised with Joelle Pineau

Meta Exhibit 1002
Meta v. Mullen - Page 00185

Service

University Service

Department Committees

2024-2025	Department Search Committee
2024-2025	Professional Advancement and Recognitions Committee
2020-2022	ECE Unit Lab Access Committee
2017-2018	Undergraduate Recruitment Committee, Chair
2017-2020	Search Committee (Software Engineering, Artificial Intelligence)
2017-2018	Tenure Committee
2015-2025	Safety Committee (Chair in 2015-2017)
2014-2016	Grant Application Support Committee
2012-2024	Graduate Committee
2008-2012	Undergraduate Recruitment Committee
2005-2011	Scholarships/Graduate Student Financing Committee
2002	Ad hoc Committee on Computing Infrastructure for ECE/SOCS
2000-2008	College Liaison Comittee
2001-2004	Information Technologies & Undergraduate Lab
2000-2002	Curriculum Committee
2000	Software Engineering subcommittee
2000-2007	Undergraduate Student Advisor

Other University Service

2024	Chair's representative, Biomedical Engineering PhD Committee meeting
2024	Faculty Mentor, McGill Biomechanics Club
2022-2024	Research Axis Co-lead and Member of CIRMMT Executive Committee
2014-2016	Elected Member of Council, McGill Association of University Teachers
2009-2013	Research Axis Co-lead and Member of CIRMMT Executive Committee
2007-2013	Co-chair, Multimodal Immersive Systems research axis, CIRMMT
2006-2008	Member, CIRMMT Board of Directors
2006	Advisory Committee for Dean of Music
2004	Tomlinson University Science Teaching Project adjudication
2003-2004	Royal Bank Teaching and Learning Innovation Fund adjudication
2003	Groupe de travail sur les normes et standards de la formation en ligne. Conférence des recteurs et des principaux des universités du Québec (CREPUQ), McGill University Representative
2002-2003	SC-IST Workgroup on Research Computing
2000-2003	SC-IST Workgroup on Classroom Design
1999-2004	Engineering Committee on Teaching and Learning
1999	SC-IST McGill Machine Project
1998	Workgroup on Educational Technology

Meta Exhibit 1002
Meta v. Mullen - Page 00186

Fundraising Activities

2002	RoboCup demonstration at McCord museum for Dean's Circle
2002	Corporate fundraising for McGill RoboCup team
2001-2002	Intelligent Classroom promotion with the Engineering Class of '50; helped raise $274,000
2001	Trottier Building research promotion

Other Activities

2007-2010	Promotion of Academic Integrity
2001-2002	Design of new Intelligent Classroom systems for ENGMC 304
1999-2002	Maintenance of the Intelligent Classrooms, training other faculty in use of the technology
1999	Curriculum development of three new courses in software engineering

Meta Exhibit 1002
Meta v. Mullen - Page 00187

Professional Activities

Service to the Community

2023-2024	Local Events Organizer, 2024 IEEE Cognitive and Computational Aspects of Situation Management (CogSIMA)
2023	Sponsorship and Exhibits Co-Chair, 2024 IEEE Haptics Symposium
2019	Government of Canada, Network of Canadian Experts on Virtual Reality
2018	Consulted by Ordre des ingénieurs du Québec regarding the OIQ's position on AI
2018	Invited Member, Fonds de recherche, Chantier sur l'intersectorialité et la créativité
2018	Co-chair, ACM SIGCHI Demonstrations
2017	External member of academic selection committee, École de technologie supérieure
2016	Organizing Committee, IEEE International Workshop on Multimedia Signal Processing, Special Session on Multimodal Interaction with Digital Information in Smart Cities
2016,2019	Selection Committee, Bill Buxton HCI Thesis Award
2016	Digital Media Program Review, York University
2016	Critique of TCPS CORE Tutorial on Research Ethics (Secretariat agreed to remove problematic question associated with the Zimbardo study)
2010-2015	Theme Leader, Enabling Technologies, Graphics Animation and New Media (GRAND) Networks of Centres of Excellence
2010-ongoing	Voting Member, IEEE Communication Society Multimedia Communications Technical Committee (IEEE MMTC)
2009	Organizer and Chair, AES Workshop on Network Technologies for Audio over IP
2008	Tenure Portfolio evaluation, York University
2005-2006	Organizer, AES Tutorial and Workshop on Human Factors in Audio
2004	Founder, AES Technical Committee for Human Factors in Audio Systems
2003	Organizer, Workshop on LAN Delivery of Audio for AES
2002-2003	Comité Scientifique de Robofolies, Centre Science de Montreal
2001	Local Events Organizer, Autonomous Agents Conference, Montreal
2001-2009	Chair, AES Technical Committee for Network Audio Systems
2000-2004	Scientific Organizer, RoboCup Junior, Montreal
2000-2001	Organizing Committee, Robofesta International Robot Games Festival, Japan
1999-2000	Member and Webmaster, Canadian Virtualized Reality Working Group
1998	Co-organizer, AAAI Symposium on Intelligent Environments

Meta Exhibit 1002
Meta v. Mullen - Page 00188

Editorial Service

2025-ongoing	Associate Editor-in-Chief, IEEE Transactions on Haptics
2021-2024	Associate Editor, IEEE Transactions on Haptics
2021	Senior Program Committee, International Conference on Multimodal Interaction
2021	Guest Editor, IEEE Transactions on Haptics (WHC track)
2020-ongoing	Associate Editor, Frontiers in Virtual Reality
2019, 2025	Associate Editor, World Haptics Conference
2019	Guest Editor, Multimodal Technologies and Interaction, Special Issue on Multimodal Medical Alarms
2018-2022	Associate Editor, Program Committee member, Haptics Symposium
2013	Guest Editor, Journal of the Audio Engineering Society, Special Issue on Audio Networking
2008-2022	Associate Editor, Journal of the Audio Engineering Society

Meta Exhibit 1002
Meta v. Mullen - Page 00189

Journal Referee

2025	Springer Nature Discover Computing
2022	IEEE Multimedia
2021	ACM Transactions on Human-Computer Interaction
2020-21	ACM Transactions on Applied Perception
2020	ACM Interactive, Mobile, Wearable and Ubiquitous Technologies
2019	Frontiers in Neurobotics
2018	Peer J–Journal of Life & Environmental Sciences
2017	Sensor Review
2015	Ambient Intelligence and Smart Environments
2010-20	IEEE Transactions on Haptics
2012	International Journal on Acoustics
2011	BMC Medical Informatics and Decision Making
2011	IEEE Software
2010	IEEE Transactions on Affective Computing
2010	IEEE Transactions on Robotics
2010	IEEE Signal Processing Magazine
2009	IEEE Transactions on Robotics
2008	EURASIP Advances in Signal Processing
2008	EURASIP Image and Video Processing
2008-ongoing	Audio Engineering Society
2007	IEEE Transactions on Systems, Man, and Cybernetics
2006	International Journal of Human-Computer Interaction
2006	Springer Virtual Reality
2005	Elsevier: Computers and Education
2005	Elsevier: Image and Vision Computing
2004, 2019	IEEE Pervasive Computing
2000, 2003	Wiley Journal of Robotic Systems
1999	ACM Transactions on Computer-Human Interaction
1999	IEEE Transactions on Robotics and Automation
1998	IEEE Personal Communications

Meta Exhibit 1002
Meta v. Mullen - Page 00190

Conference Review

2024	IEEE Conference on Cognitive and Computational Aspects of Situation Management (CogSIMA)
2023	ACM/IEEE Human-Robot Interaction
2020	IEEE Virtual Reality
2018, 2020, 2024	ACM SIGCHI User Interface Systems and Techniques
2018	Workshop on Assistive Computer Vision and Robotics
2018	Eurohaptics
2017	International Conference on Auditory Display
2017	Mobile HCI
2017-19	IEEE World Haptics
2016	IEEE International Workshop on Multimedia Signal Processing
2015	ACM Multimedia
2015	INTERACT
2014	ACM SIGGRAPH
2012, 2013	Workshop on Context Based Affect Recognition
2012, 2013	International Society for Presence Research
2012	IEEE Canadian Conference on Electrical and Computer Engineering
2011	AES Conference on Audio Networking
2011	Intelligent Robots and Systems
2011	VRIC Wkshop on Haptics for Telepresence, Teleoperation & Collab. Environments
2009	IEEE Haptics Symposium
2009	International Computer Music Conference
2009	Stereoscopic Displays and Applications
2008-19	ACM SIGCHI Human Factors in Computing
2008	Immersive Medical Telepresence
2006	International Conference on Digital Audio Effects
2006, 2007	IEEE Workshop on Projector-Camera Systems (part of CVPR)
2005-2009	Canadian Conference on Computer and Robot Vision
2004, 2009-14, 2016	Graphics Interface
2003, 2006	Audio Engineering Society
2003	New Interfaces for Musical Expression
2002	RoboCup International Symposium
2002, 2015	IEEE International Conference on Robotics and Automation
2001	ACM UbiComp
2001	IEEE International Conference on Computer Vision

Meta Exhibit 1002
Meta v. Mullen - Page 00191

Grant Review

2017	NSERC Strategic Project Grants
2017	Member of Expert Committee, CFI Innovation Fund
2016	L'Agence Nationale de la Recherche (France)
2011	NSERC Collaborative Research and Training Experience Program (CREATE)
2009, 2011	Mathematics of Information Technology and Complex Systems (MITACS)
2009	NSERC Strategic Networks (Site Visit Chair)
2008, 2015, 2017	Peer review, NSERC Collaborative Research and Development Grants
2007-2008	NSERC Industrial Research Chair (Site Visit)
2007-2020	Research Grants Council, Hong Kong
2005	NSERC Steacie Memorial Fellowship
2002, 2005-2008	Panel member, NSERC/Canada Council, New Media Initiative
2001-2017	Peer review, NSERC Discovery Grants
2001, 2008	Peer review, CFI (Canada Foundation for Innovation)

Participation in Academic Fora

2019	San Diego Opera – Opera Hack, July 27-28
2019	Dagstuhl Seminar on Ubiquitous Computing Education, June 2-7
2010	Participant, NSF/CCC Workshop on Ultra-Large Scale Interaction

Service to Society

Organizations for People with Disabilities

2024	foster parent for Mira Foundation service dog in training

Consumer Rights' Advocacy

2013	brought successful appeal (2013 QCCA 1670) before Quebec Court of Appeal regarding anti-SLAPP legislation
2013	initiated petition to improve rights of Canadian airline passengers
2010	advocating for reliable public transportation in Montreal
1997-2019	created and maintained passenger rights website

Meta Exhibit 1002
Meta v. Mullen - Page 00192