US 20020163486A1

(19) United States

(12) Patent Application Publication

(10) Pub. No.: US 2002/0163486 A1

(43) Pub. Date: Nov. 7, 2002

RONZANI et al.

(54) **HEAD-MOUNTED DISPLAY SYSTEM**

(76) Inventors: **PETER A. RONZANI**, LOS GATOS, CA (US); **JEFFREY JACOBSEN**, HOLLISTER, CA (US); **RONALD GALE**, SHARON, MA (US); **STEPHEN POMBO**, SUNNYVALE, CA (US)

Correspondence Address:
THOMAS O HOOVER
HAMILTON BROOK SMITH & REYNOLDS
TWO MILITIA DRIVE
LEXINGTON, MA 02173

(*) Notice: This is a publication of a continued prosecution application (CPA) filed under 37 CFR 1.53(d).

(21) Appl. No.: **08/857,273**

(22) Filed: **May 16, 1997**

Related U.S. Application Data

(63) Continuation of application No. 08/717,536, filed on Sep. 23, 1996, now abandoned, which is a continuation of application No. 08/327,113, filed on Oct. 21, 1994, now abandoned, which is a continuation-in-part of application No. 08/287,970, filed on Aug. 9, 1994, now abandoned, which is a continuation-in-part of application No. 08/220,042, filed on Mar. 30, 1994, now abandoned, which is a continuation-in-part of application No. 08/141,133, filed on Oct. 22, 1993, now abandoned.

Publication Classification

(51) **Int. Cl.**[7] **G09G 3/36**

(52) **U.S. Cl.** **345/87**

(57) **ABSTRACT**

A head-mounted display system displays information via a matrix display element mounted within a housing that is positioned relative to at least eye of a user. The display is connected to a video or information source such that the user can view information or images shown on the display. The display can be mounted to a frame so that the user can move the display in and out of the user's field of view without adjusting the supporting harness that holds the display on the user's head.

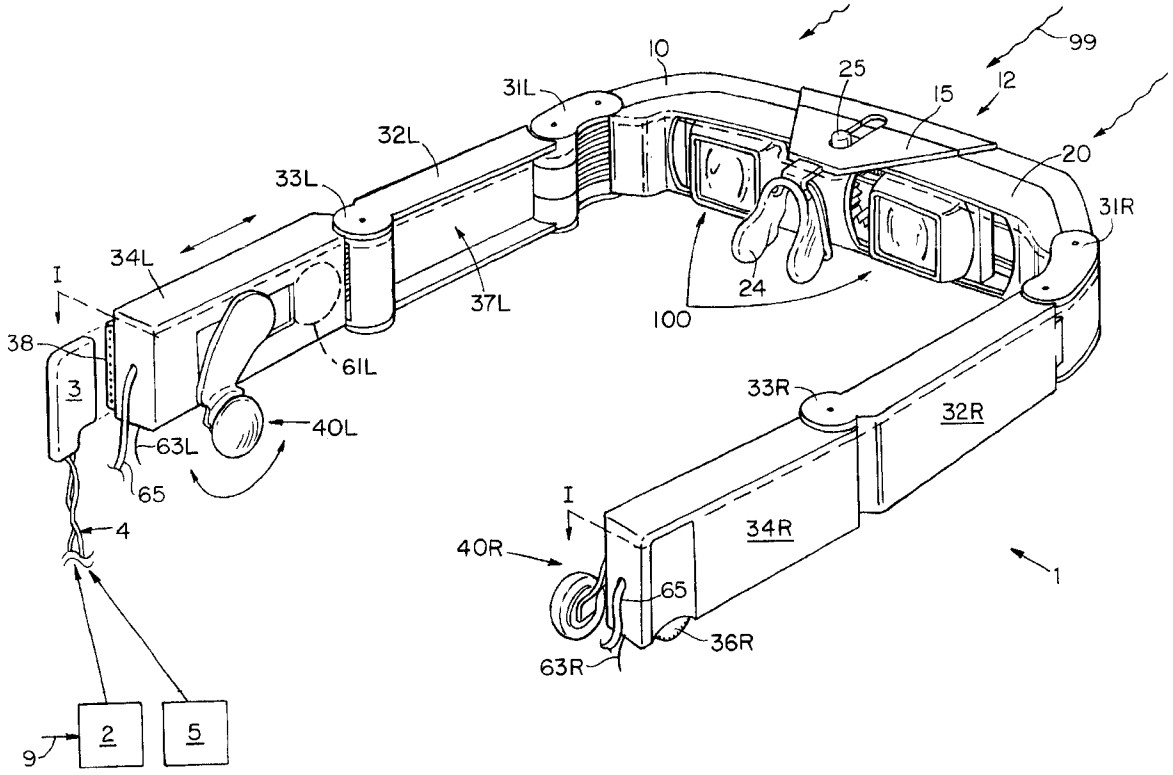

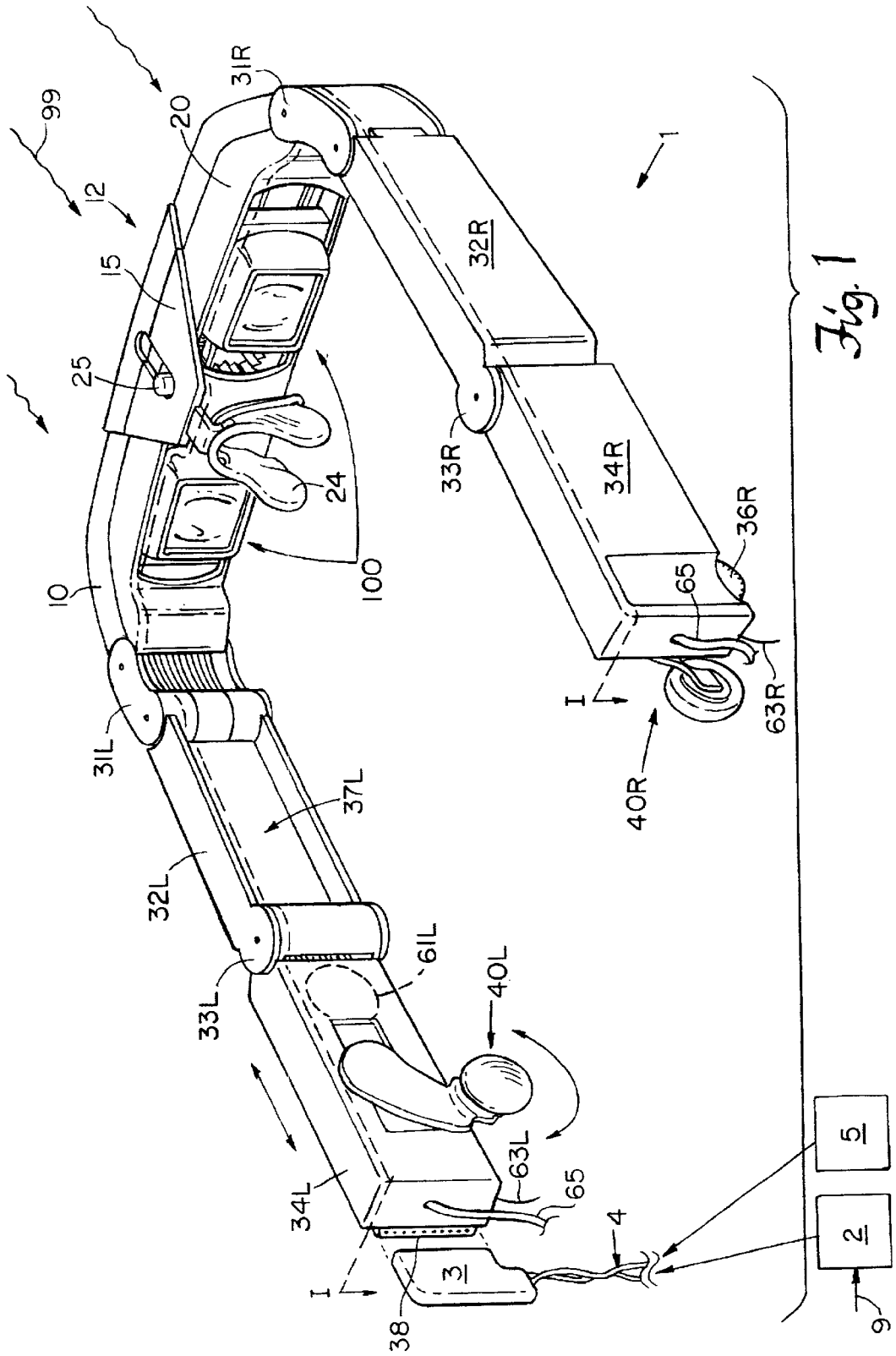
99
12
20
31R
15
25
24
100
10
31L
37L
32L
33L
61L
40L
34L
63L
65
38
3
4
5
2
9
1
32R
33R
34R
36R
65
63R
40R
I

Fig. 1

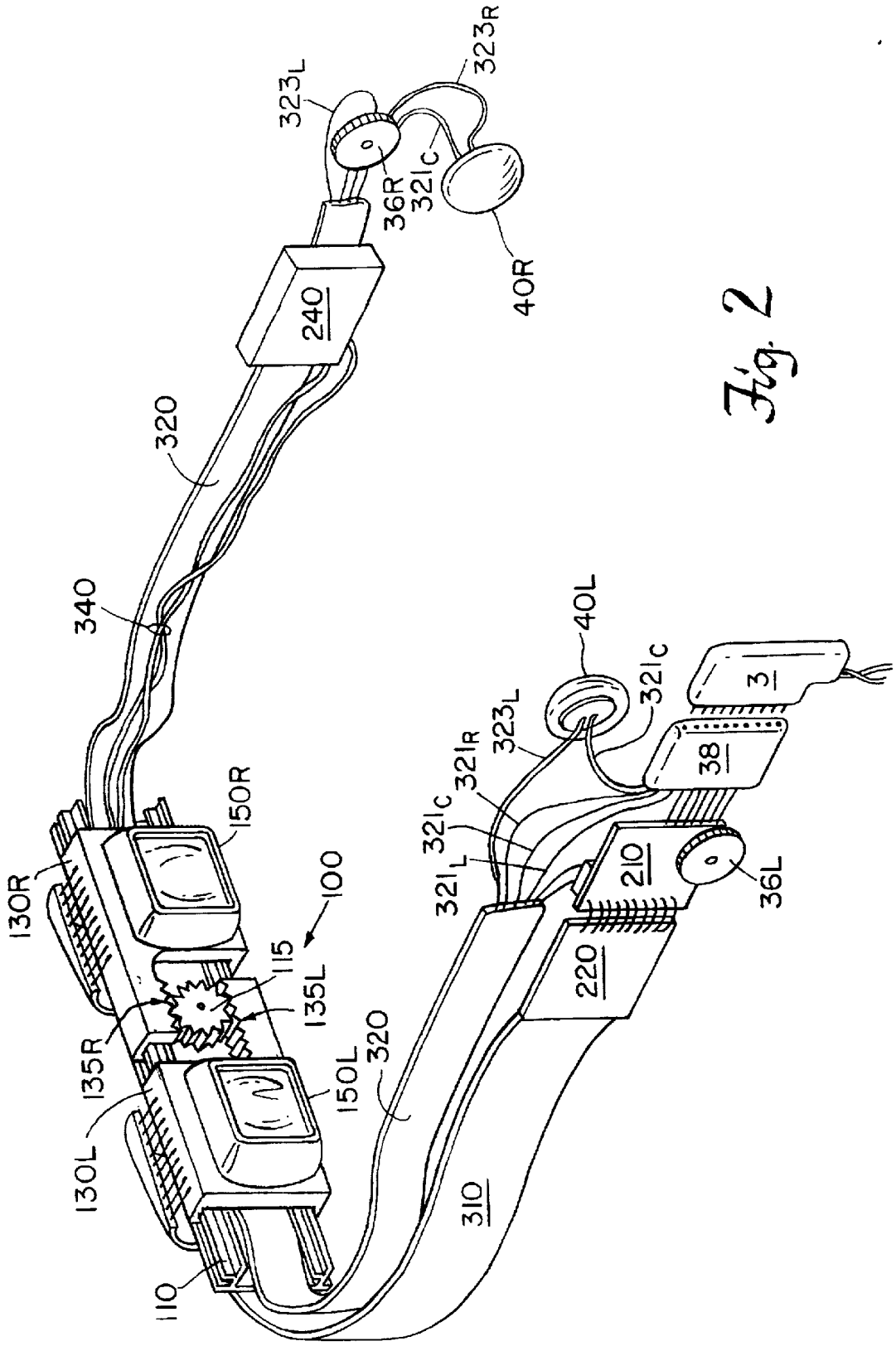
323L
323R
36R
321C
40R
240
320
340
130R
150R
100
115
135L
135R
150L
130L
110
320
310
40L
321C
323L
321R
321C
321L
210
220
36L
38
3

Fig. 2

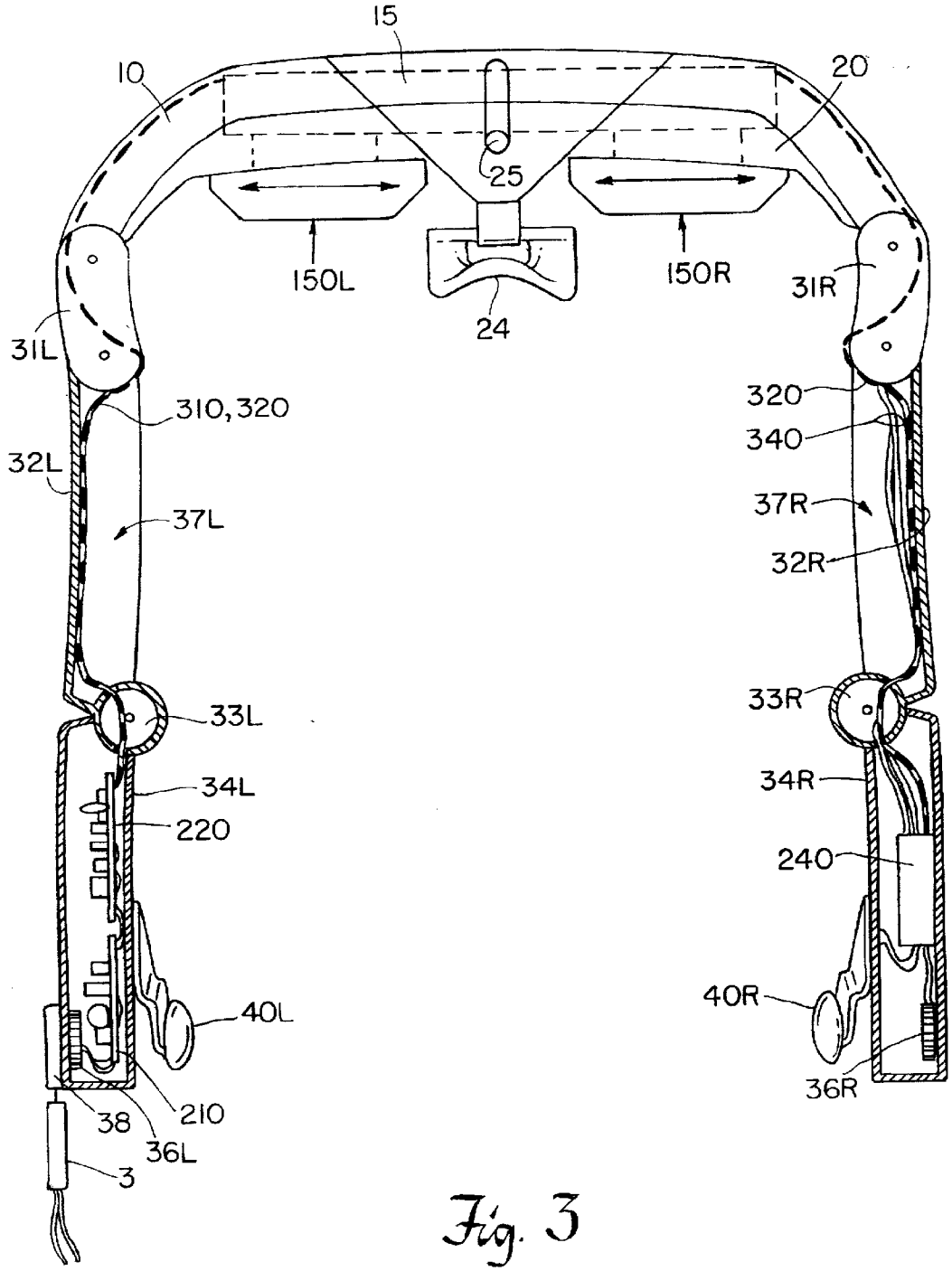
15
10
20
25
150L
150R
24
31L
31R
310,320
320
340
32L
37L
37R
32R
33L
33R
34L
34R
220
240
40L
40R
38
210
36L
36R
3

Fig. 3

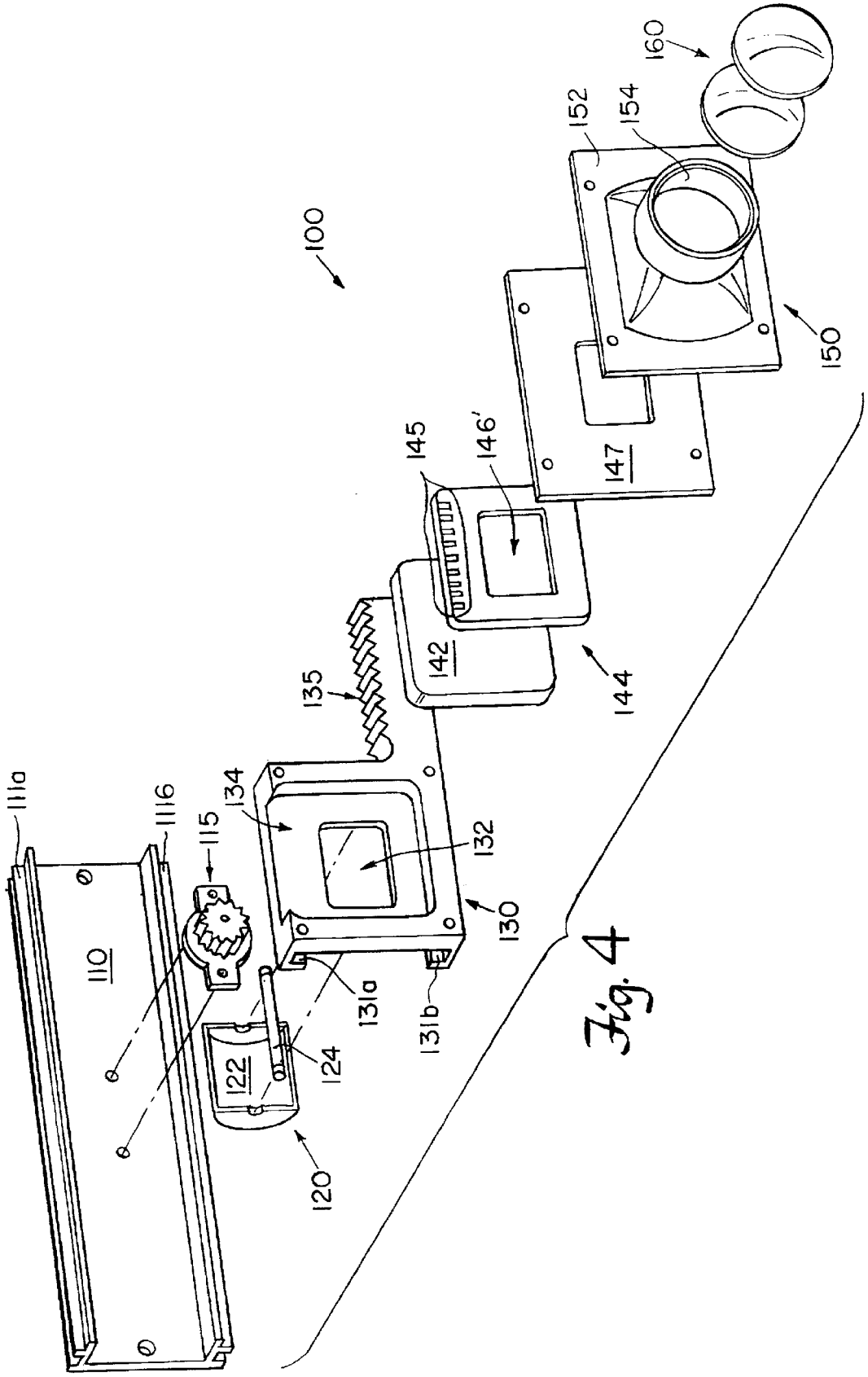
100
110
111a
111b
115
120
122
124
130
131a
131b
132
134
135
142
144
145
146'
147
150
152
154
160

Fig. 4

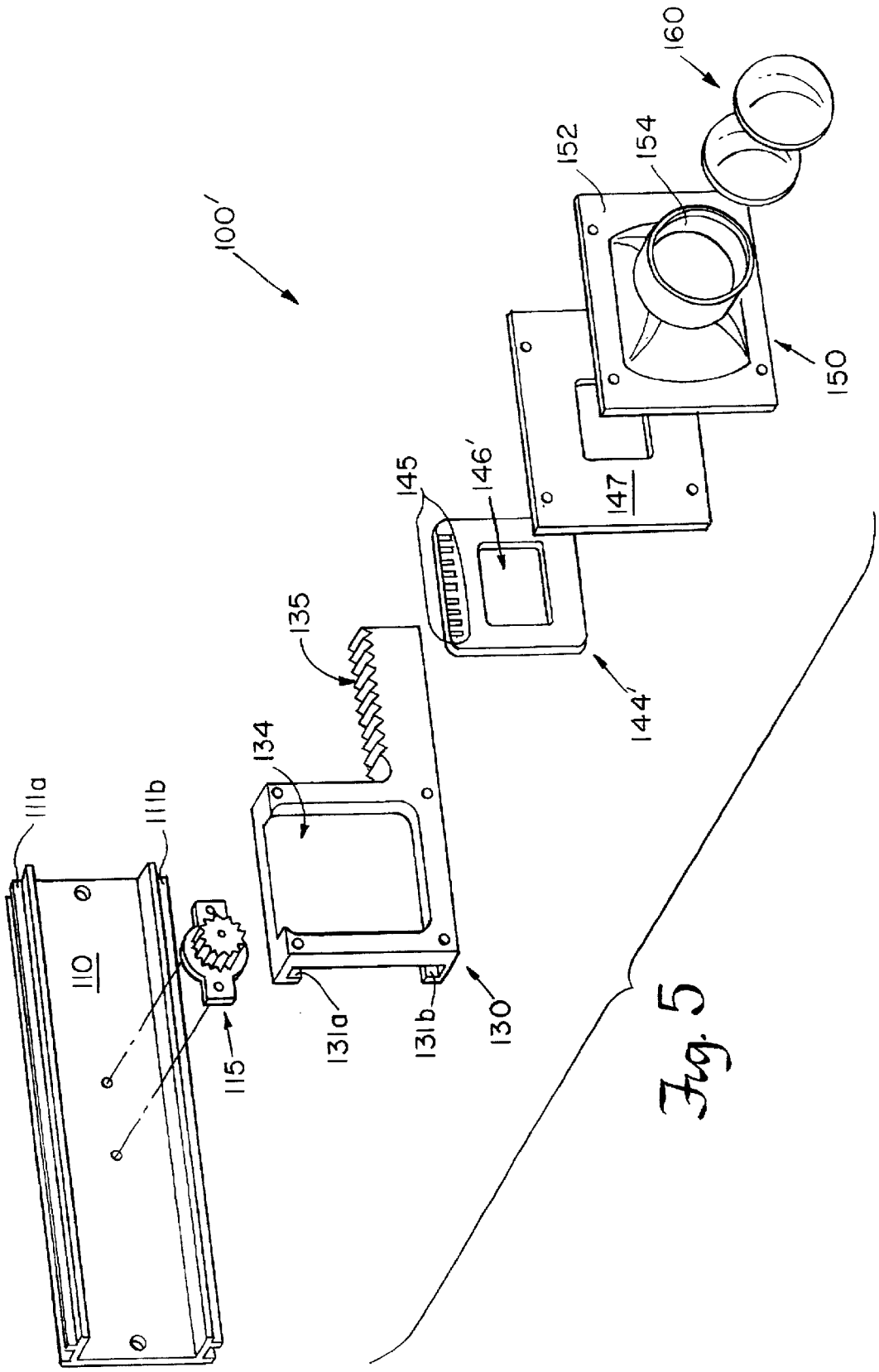
100'
160
152
154
150
147
145
146'
144'
135
134
111a
111b
110
115
131a
131b
130

Fig. 5

Fig 6

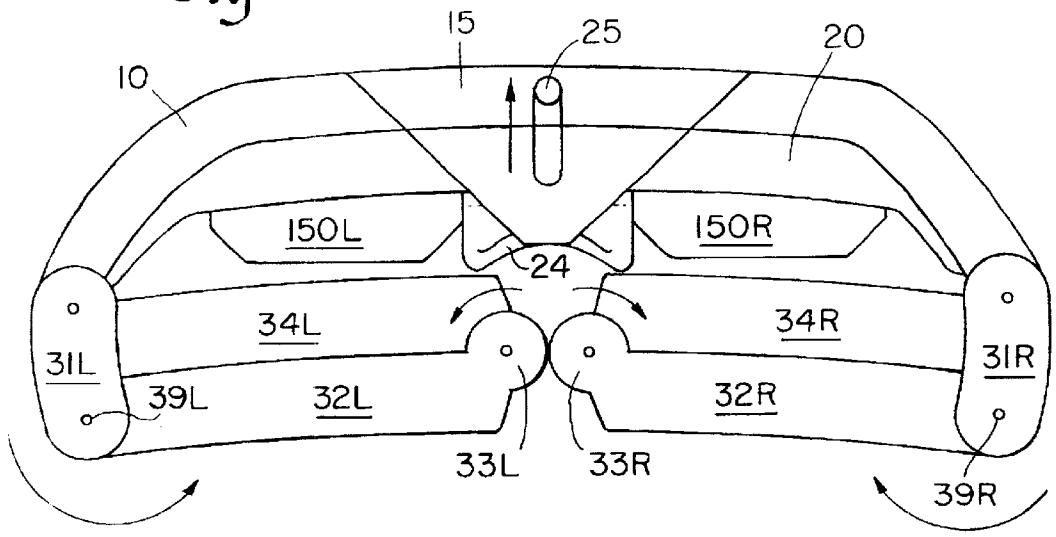

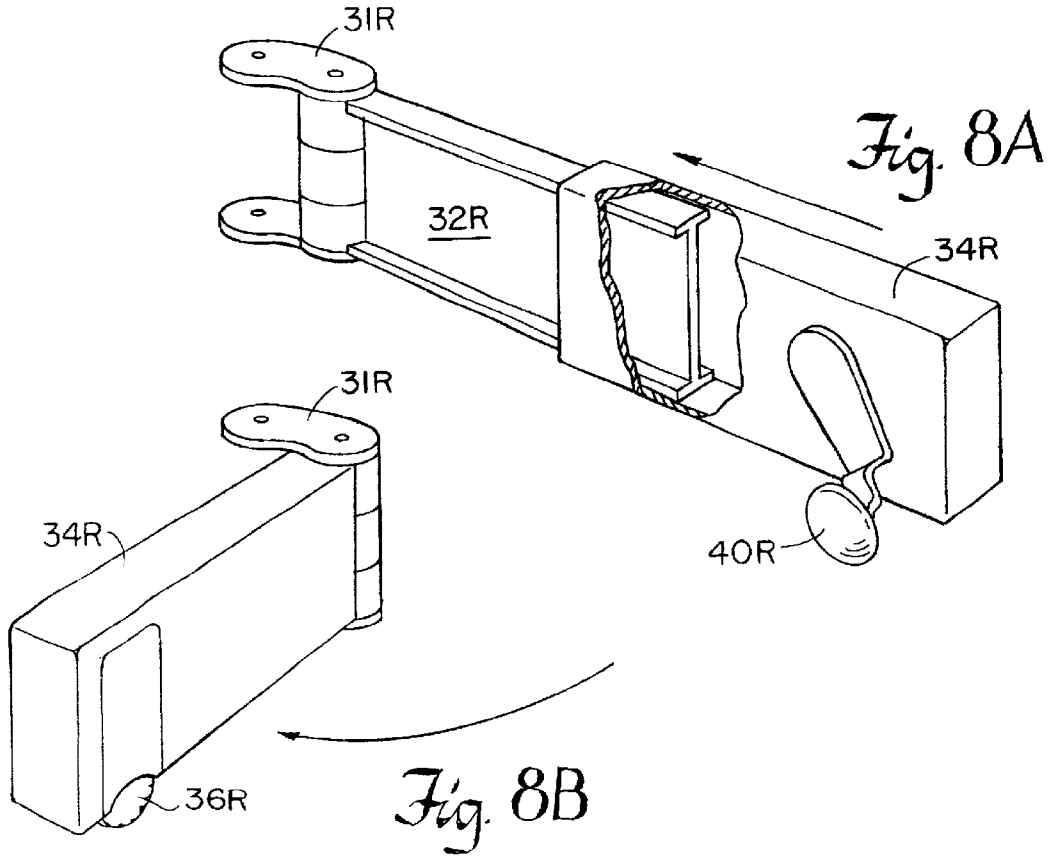

Fig. 8A

Fig. 8B

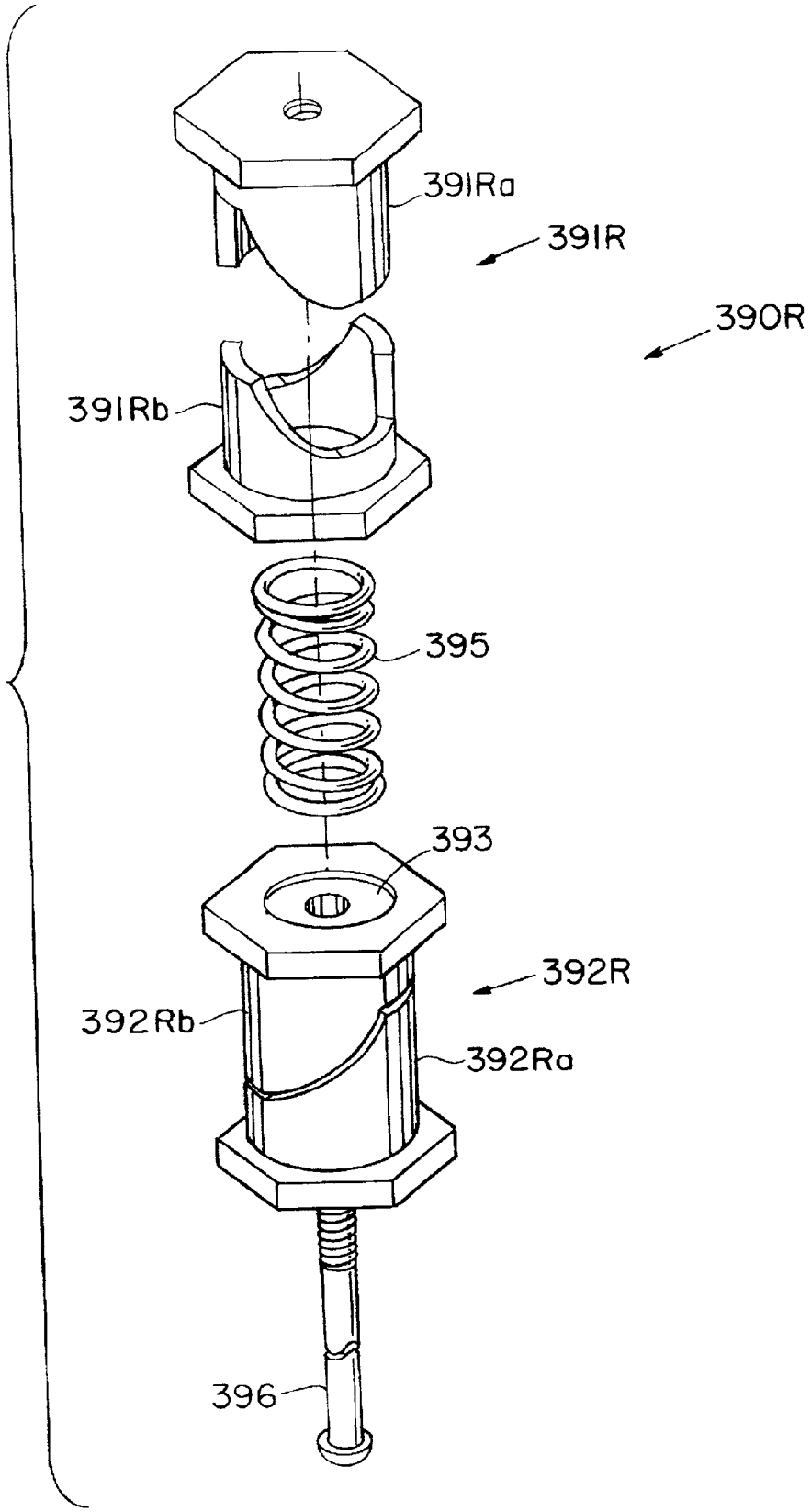

Fig. 7

Fig. 9

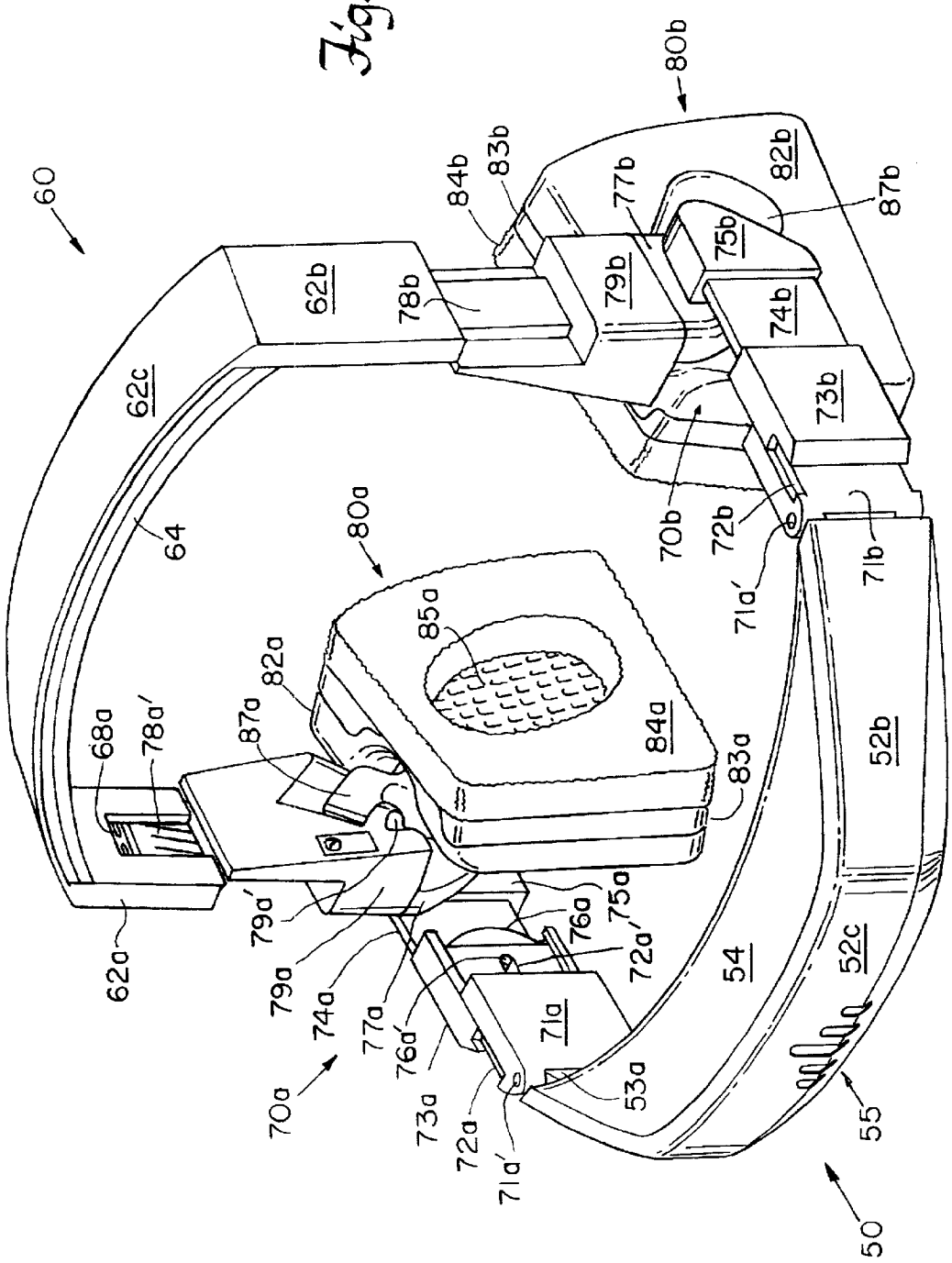
60
62c
64
62a
68a
78a'
87a
82a
80a
85a
84a
83a
79a'
79a
74a
77a
76a'
70a
73a
72a
71a'
71a
53a
76a
75a
72a'
54
52c
55
50
52b
71b
71a'
72b
70b
73b
74b
75b
82b
87b
80b
79b
77b
83b
84b
78b
62b

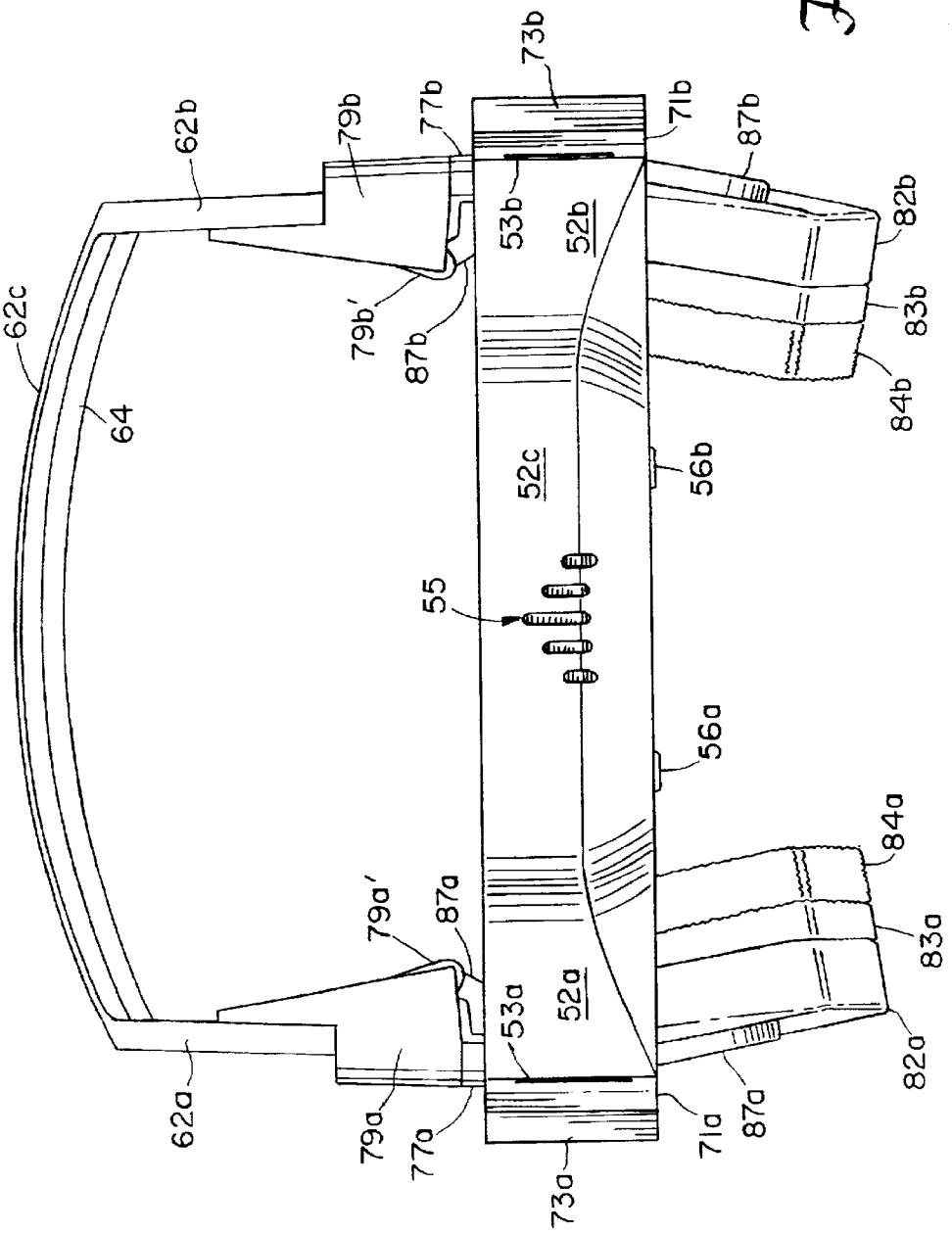
62c
64
62b
79b
77b
73b
71b
87b
82b
83b
84b
53b
52b
79b'
87b
52c
56b
55
56a
84a
83a
82a
87a
71a
73a
77a
79a
62a
53a
52a
87a
79a'

Fig. 10

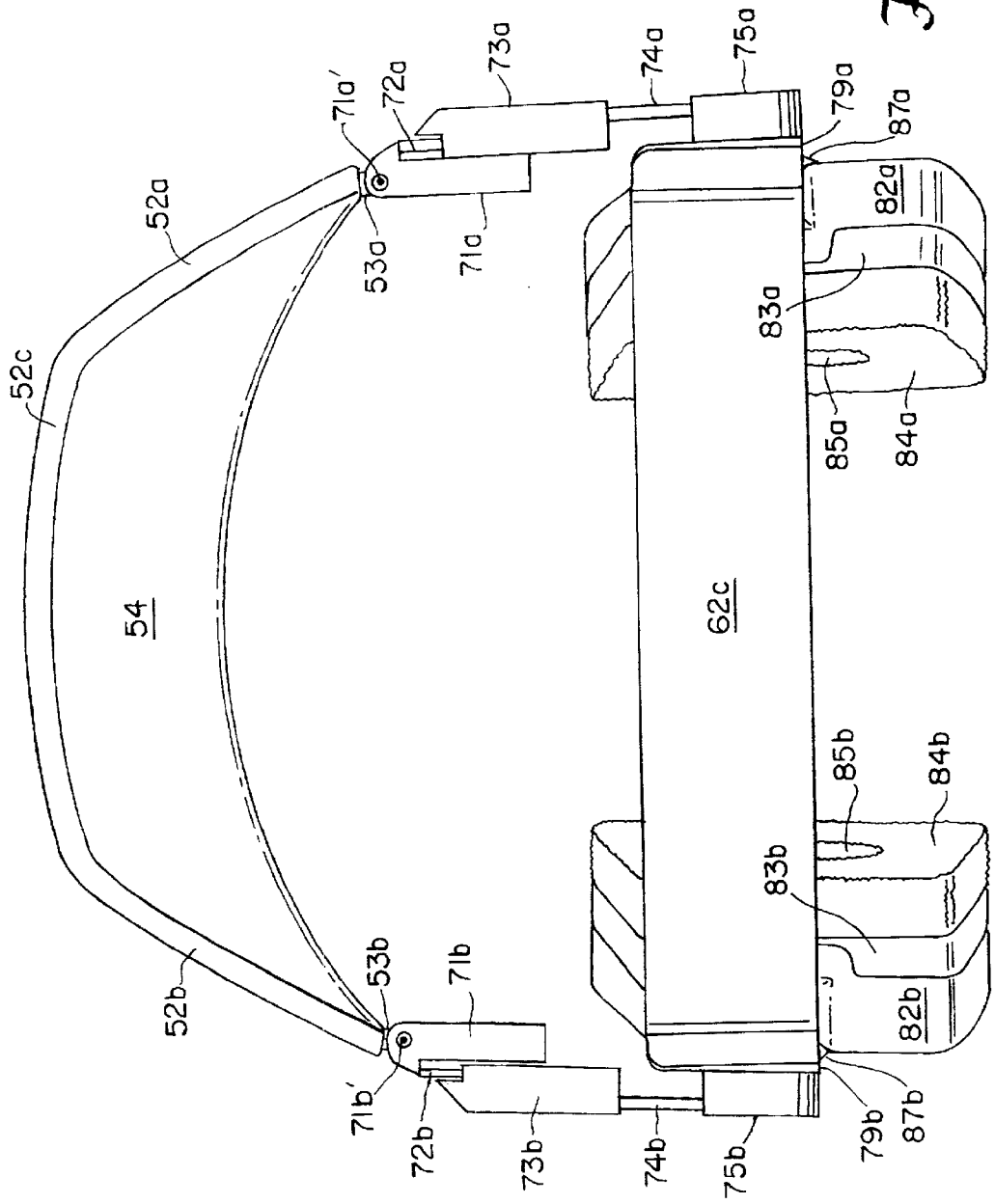
52c
52a
52b
54
53a
53b
71a'
71a
71b
71b'
72a
72b
73a
73b
74a
74b
75a
75b
79a
79b
87a
87b
82a
82b
83a
83b
84a
84b
85a
85b
62c

Fig. 11

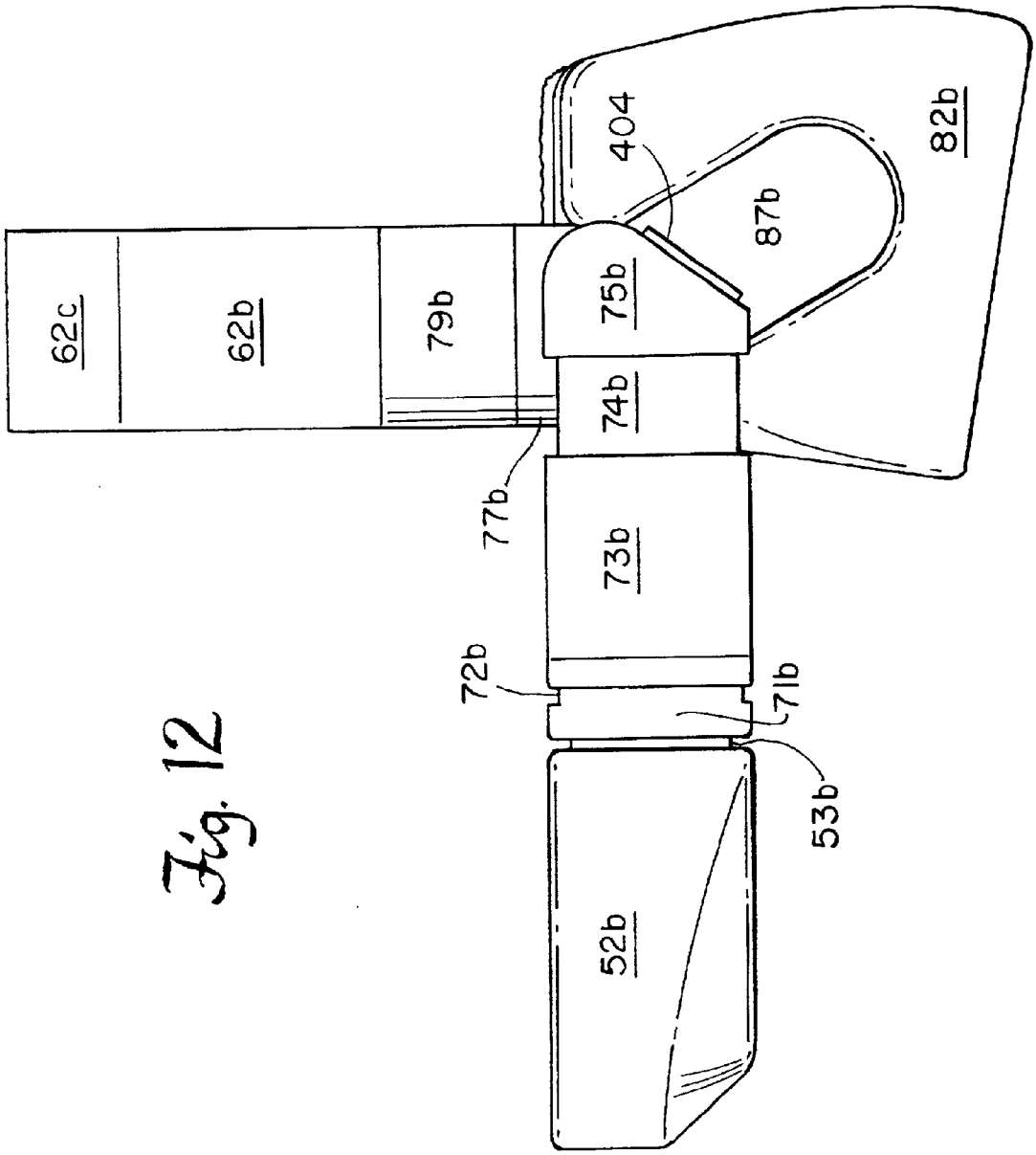

Fig. 12

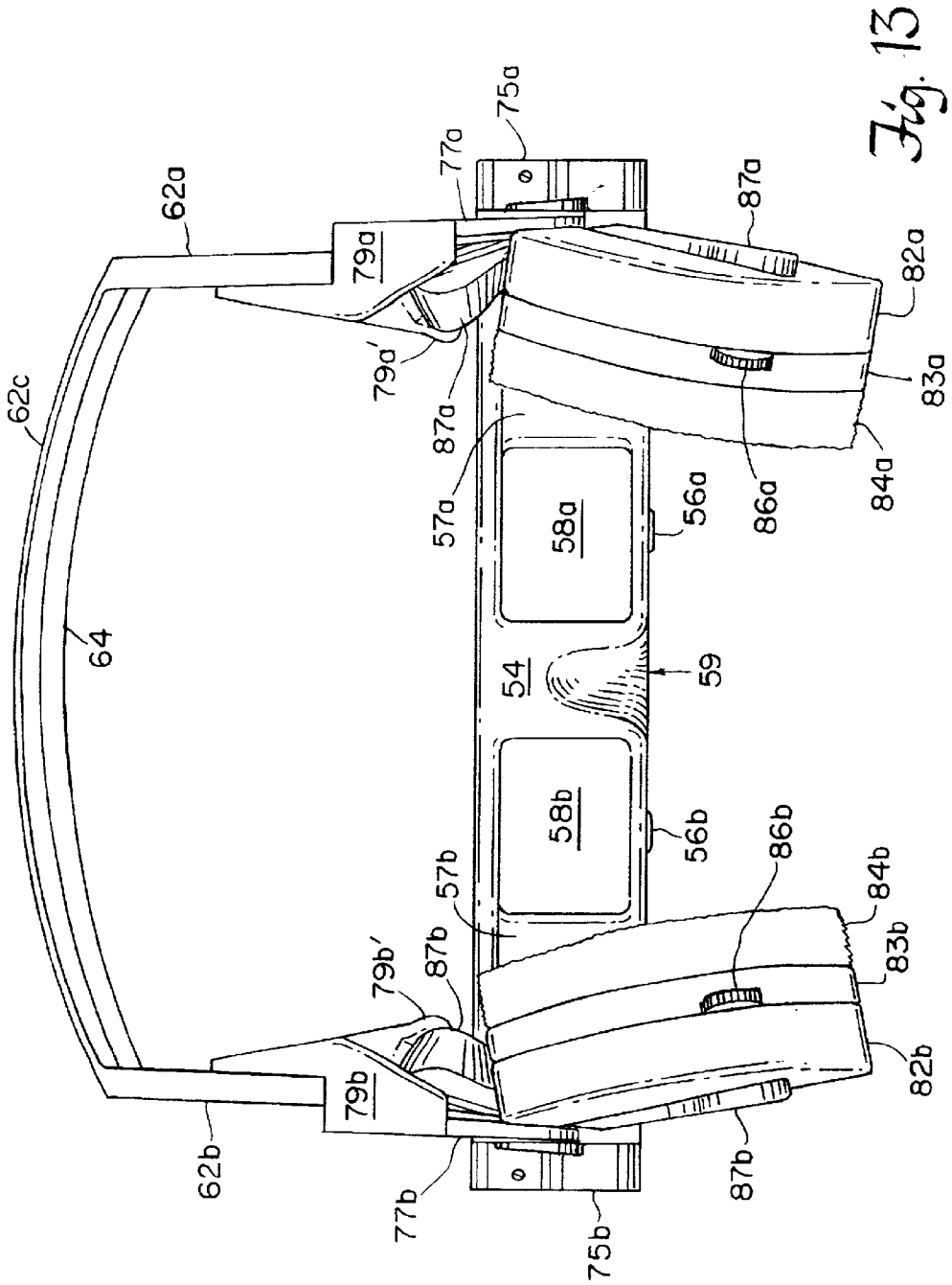
62c
62a
62b
64
79a
79a'
77a
75a
87a
82a
83a
84a
86a
57a
58a
56a
54
59
58b
56b
57b
86b
84b
83b
82b
79b'
87b
79b
77b
75b
87b

Fig. 13

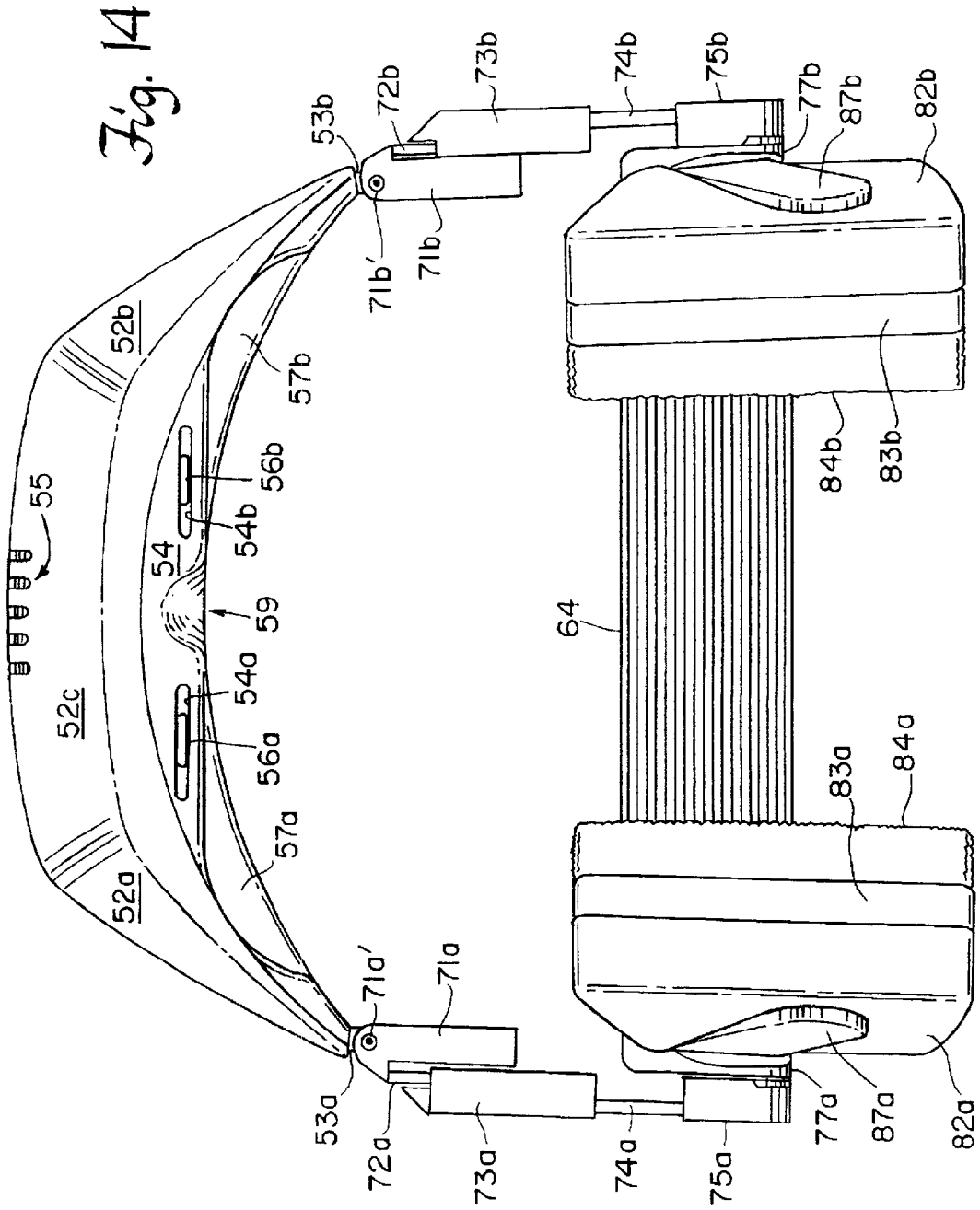
Fig. 14
53b
72b
73b
74b
75b
77b
87b
82b
71b'
71b
52b
57b
56b
55
54b
54
59
64
84b
83b
52c
54a
56a
57a
83a
84a
52a
71a'
71a
53a
72a
73a
74a
75a
77a
87a
82a

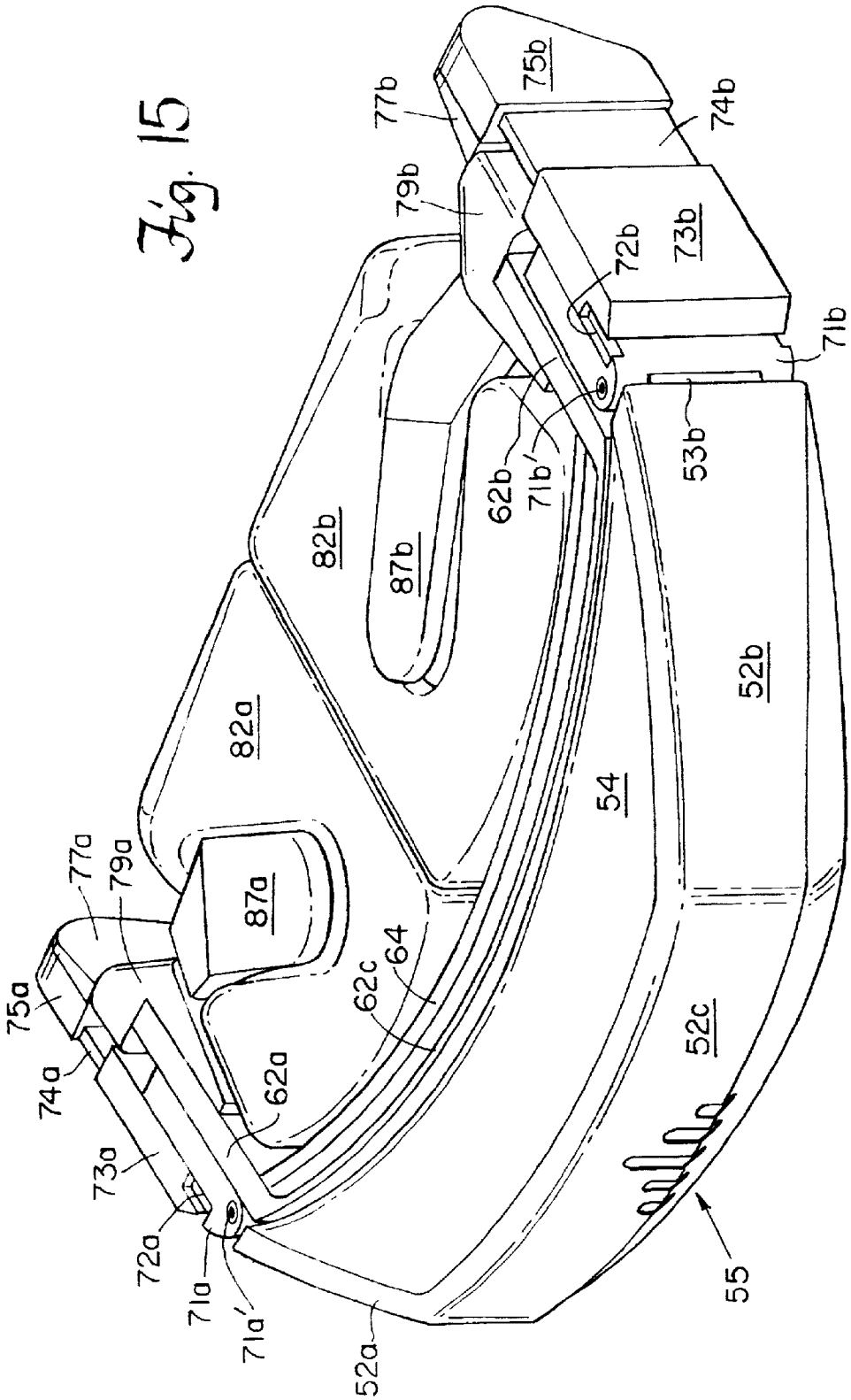
75b
77b
74b
79b
73b
72b
71b
53b
62b
71b'
82b
87b
52b
82a
54
77a
79a
87a
64
62c
75a
74a
62a
52c
73a
72a
71a
71a'
52a
55

Fig. 15

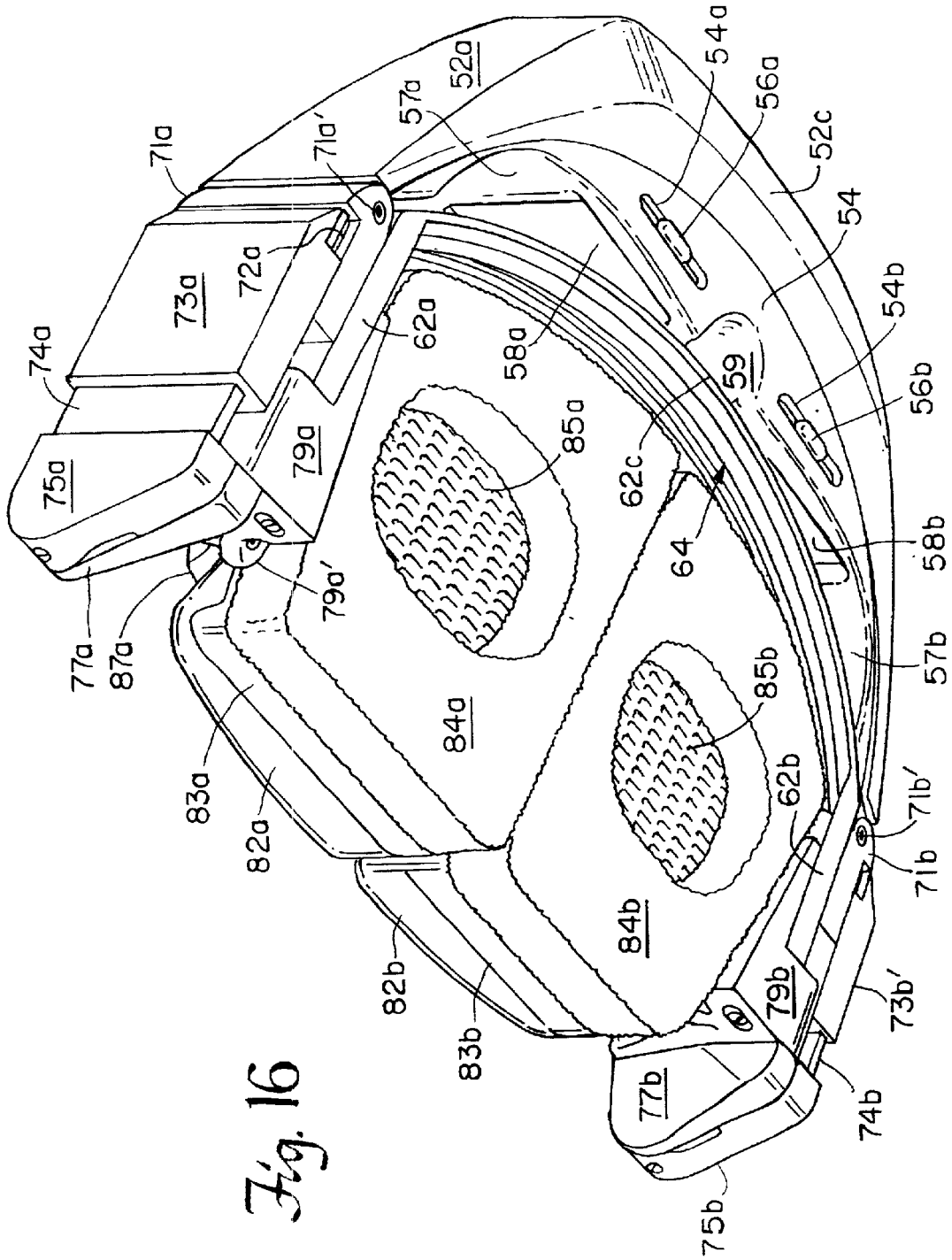
71a
71a'
57a
52a
54a
56a
52c
54
54b
56b
58b
57b
71b'
71b
73b'
74b
75b
77b
79b
62b
85b
84b
82b
83b
82a
83a
87a
77a
75a
74a
73a
72a
79a
79a'
62a
58a
85a
84a
62c
64
59

Fig. 16

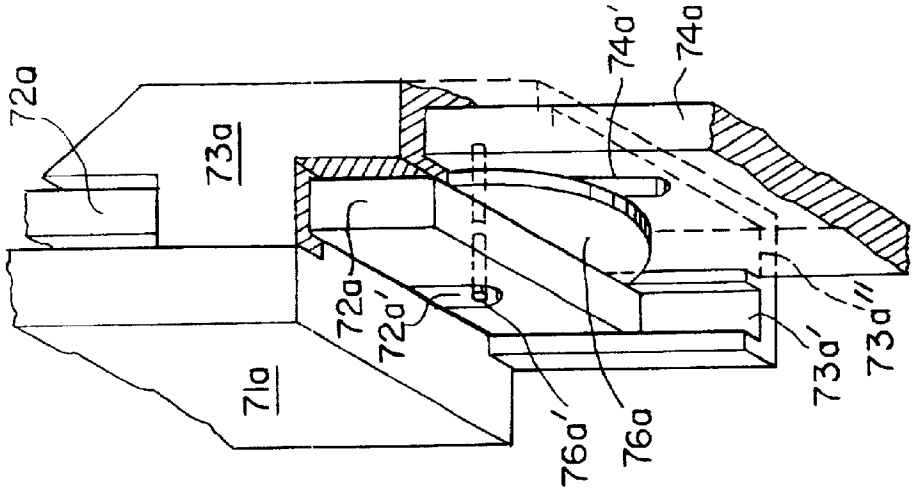

Fig. 17B

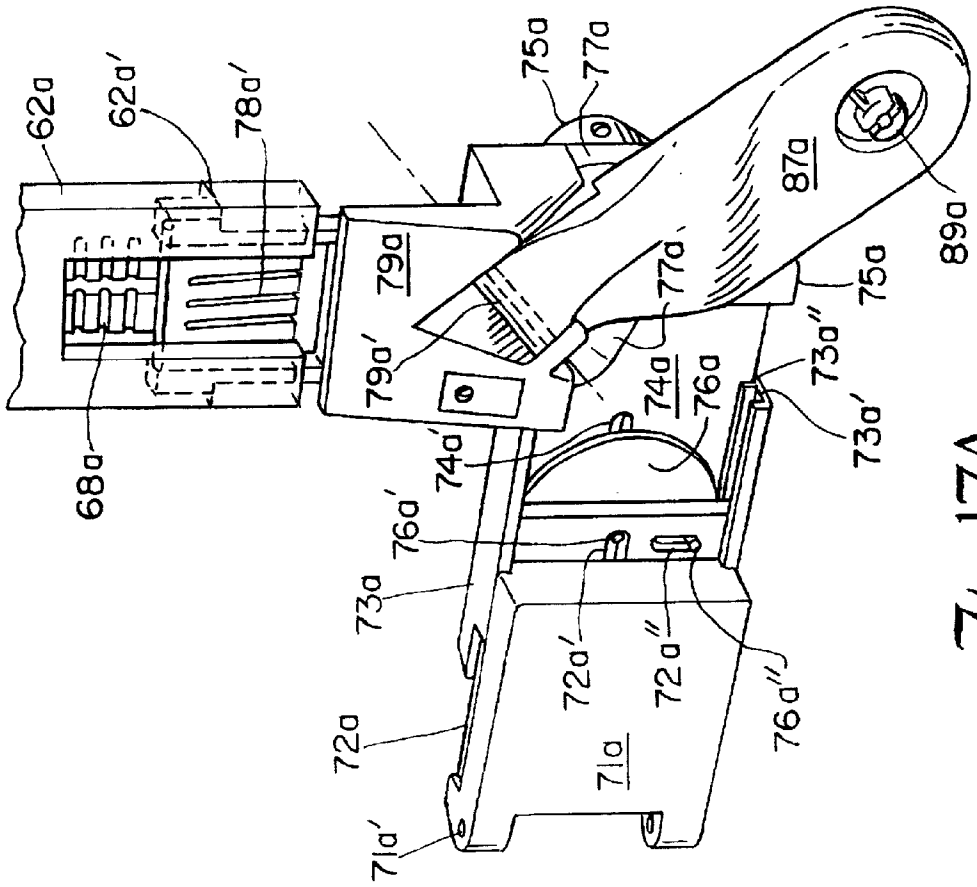

Fig. 17A

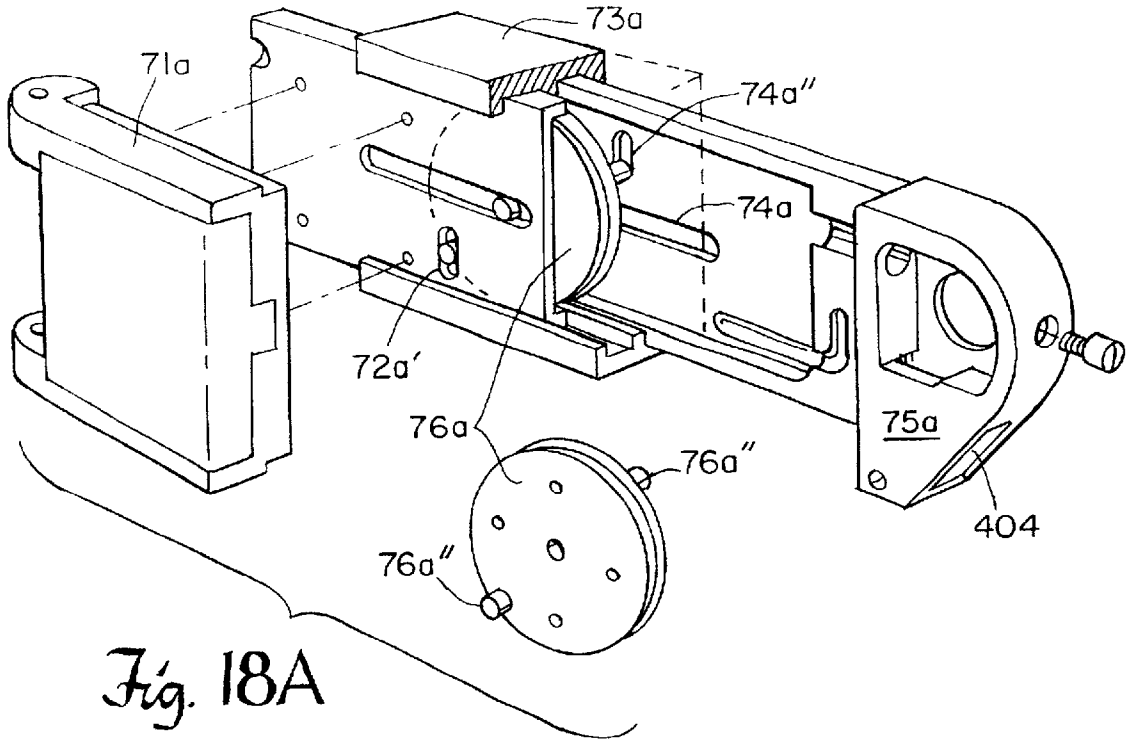

Fig. 18A

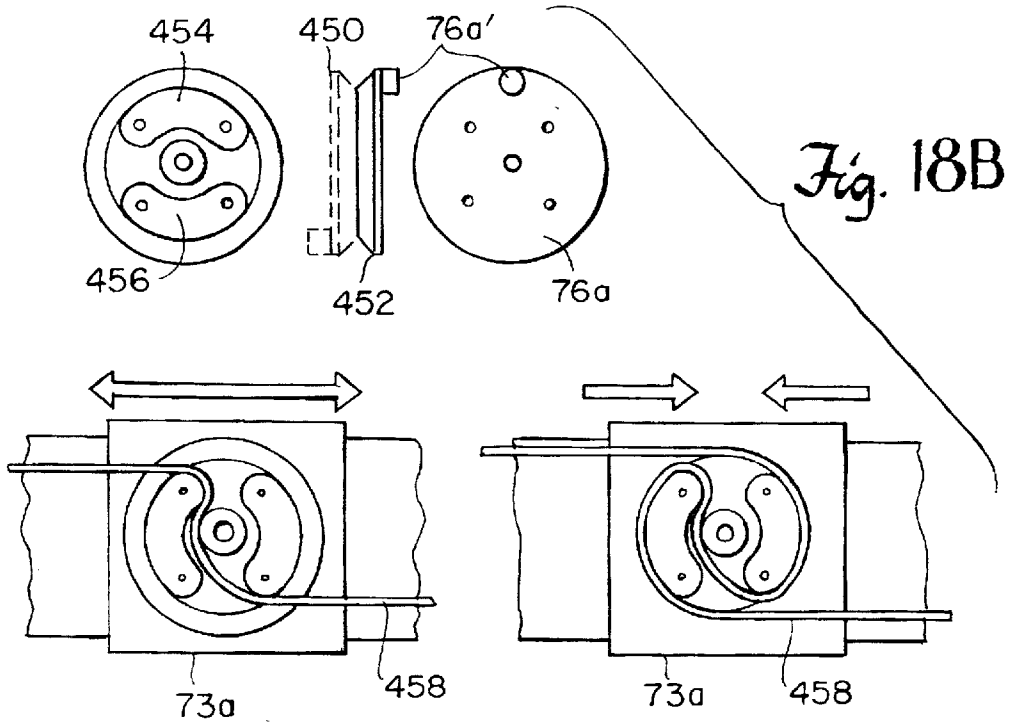

Fig. 18B

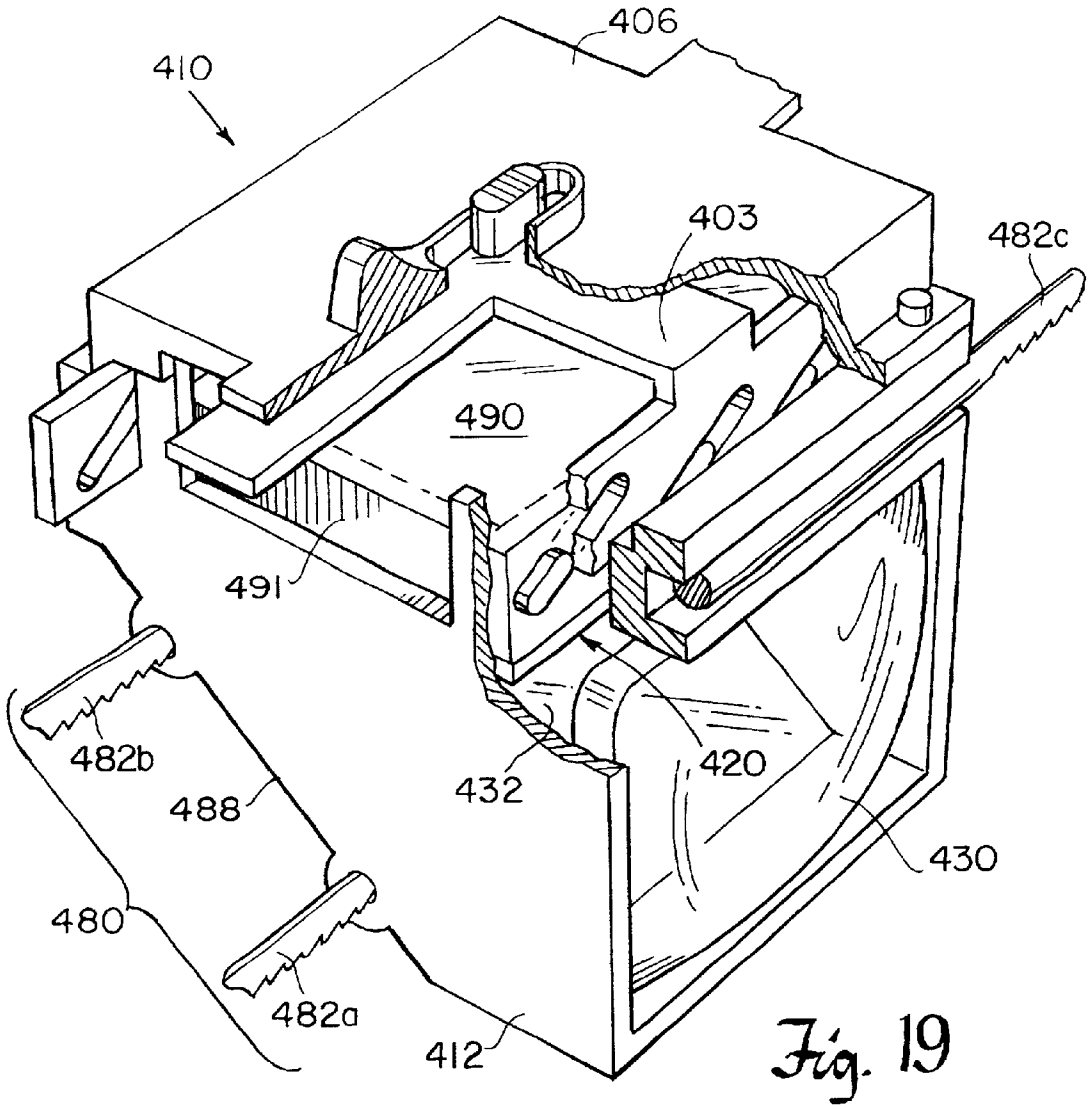
406
410
403
482c
490
491
482b
488
432
420
430
480
482a
412

Fig. 19

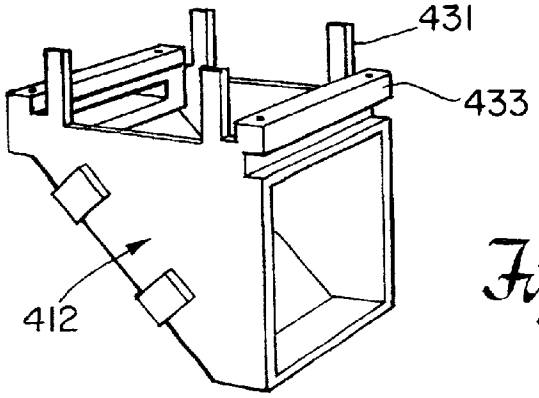
431
433
412

Fig. 21

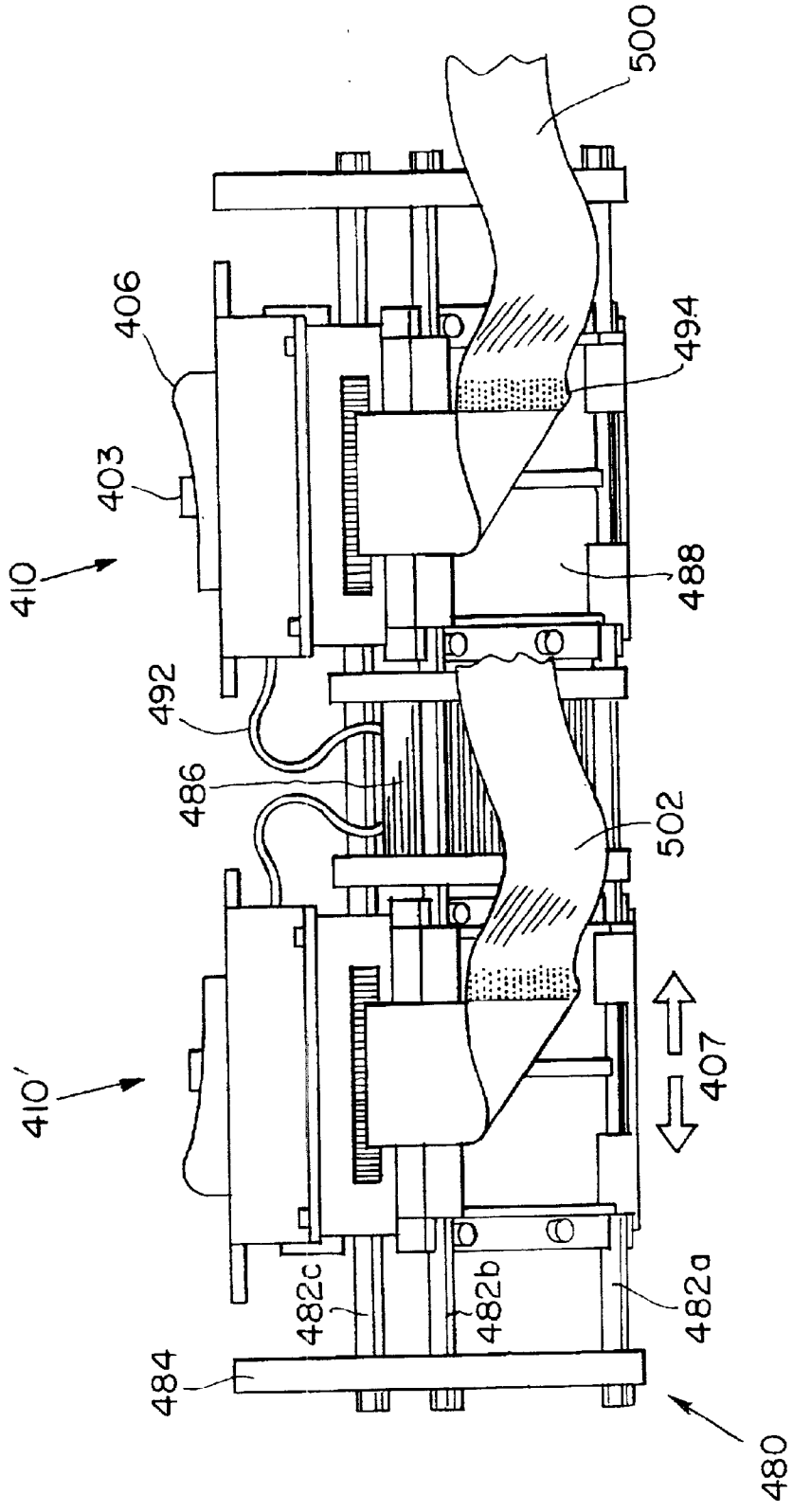
500
406
494
403
410
488
492
486
502
410'
407
482c
482b
482a
484
480

Fig. 20

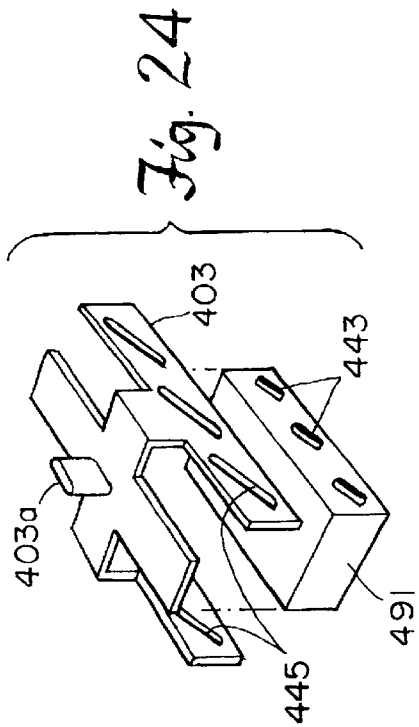

Fig. 24

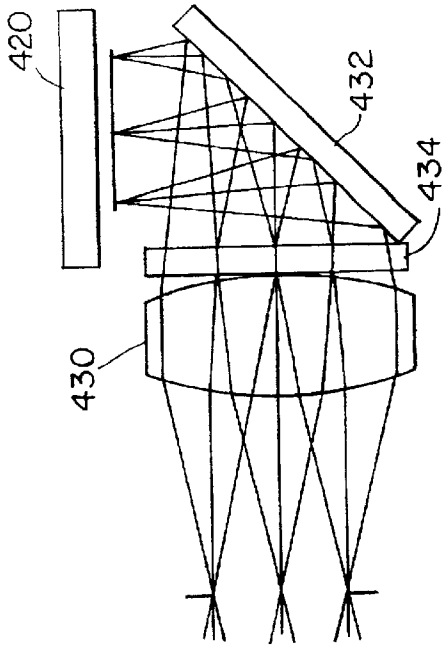

Fig. 25

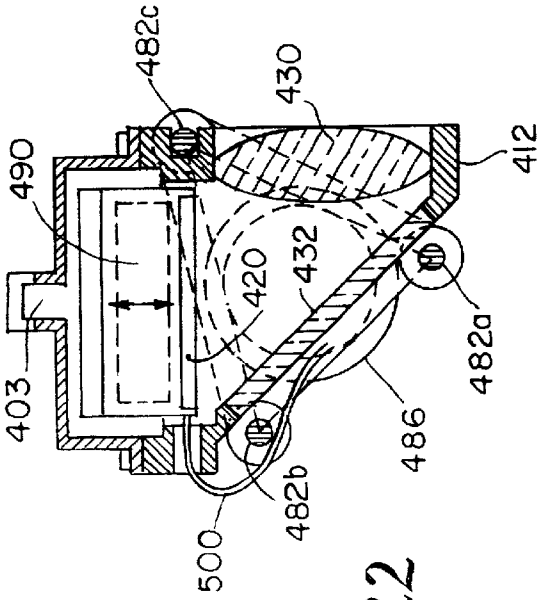

Fig. 22

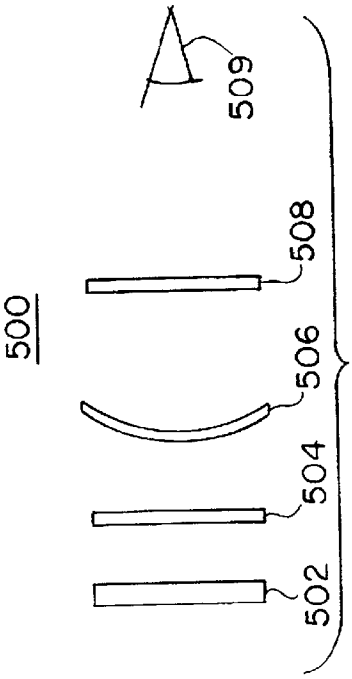

Fig. 26

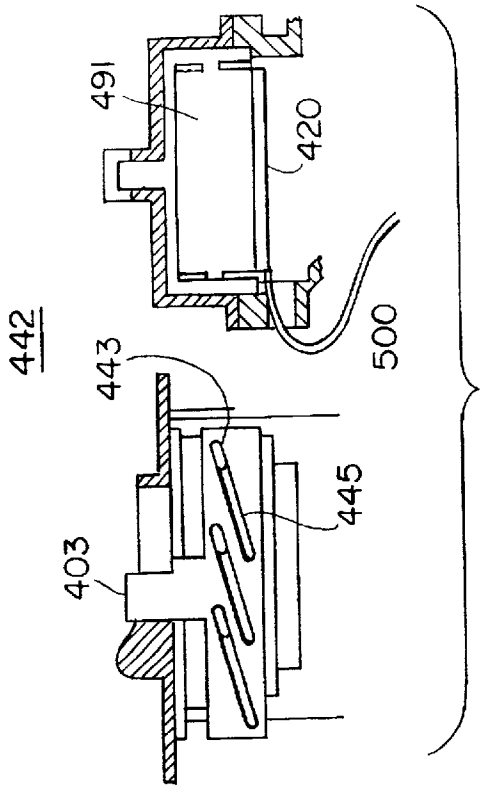

Fig. 23B

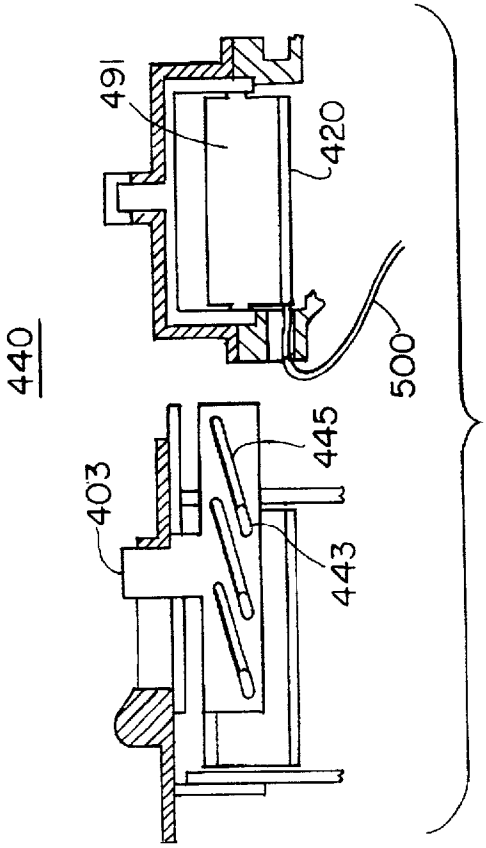

Fig. 23A

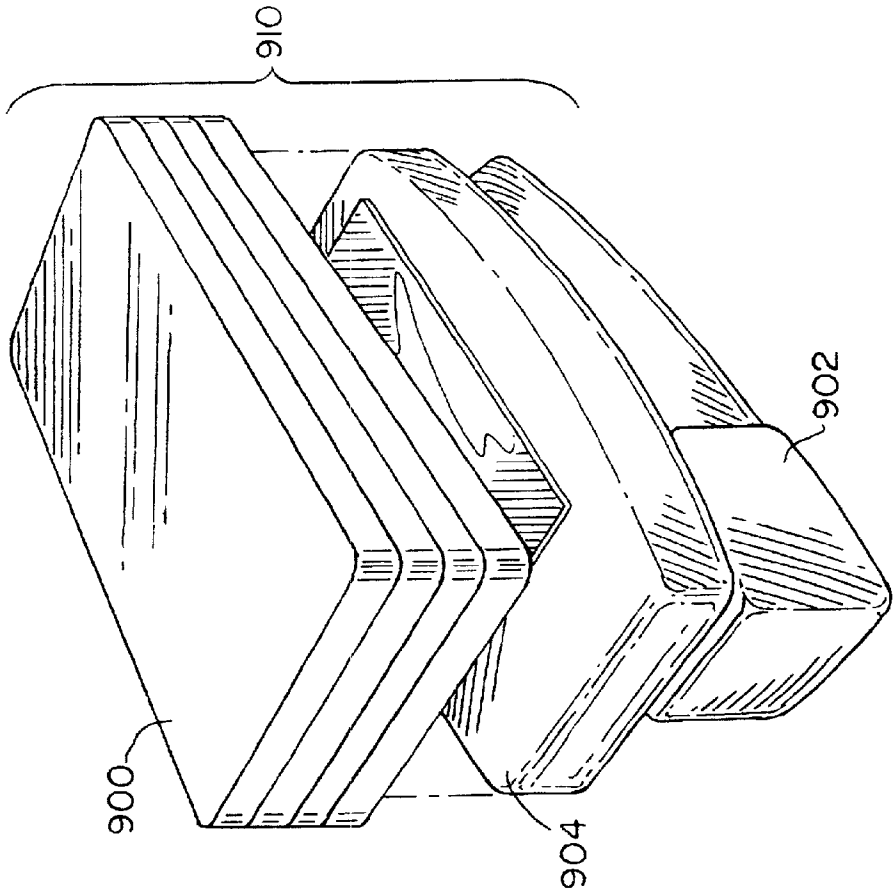

Fig. 28

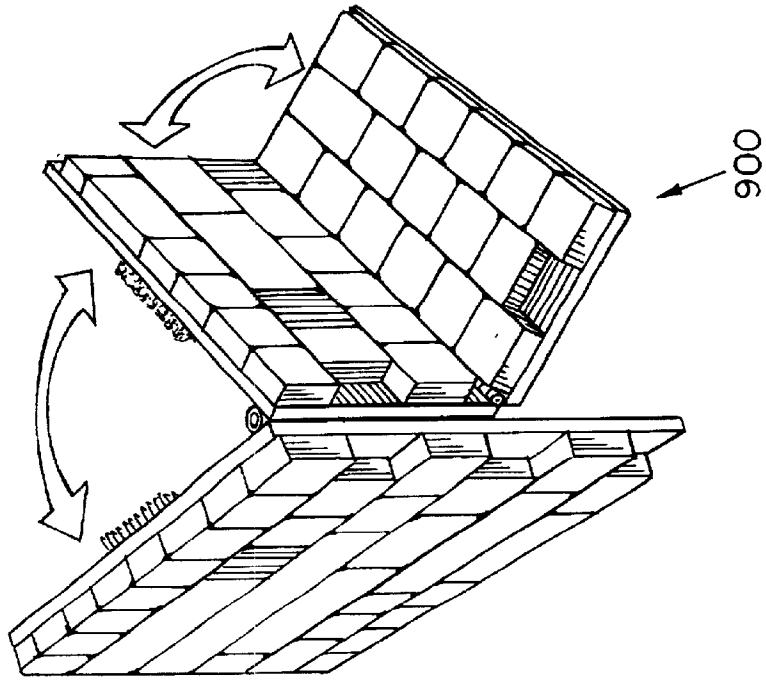

Fig. 27

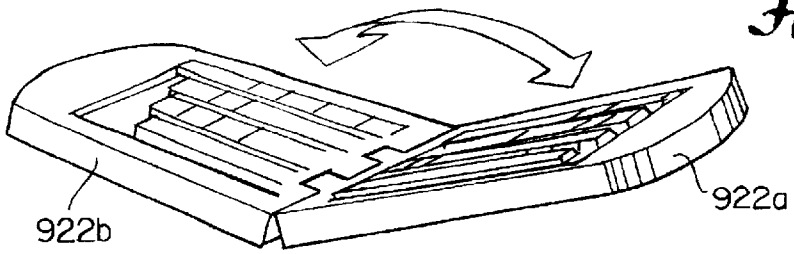

Fig. 29B

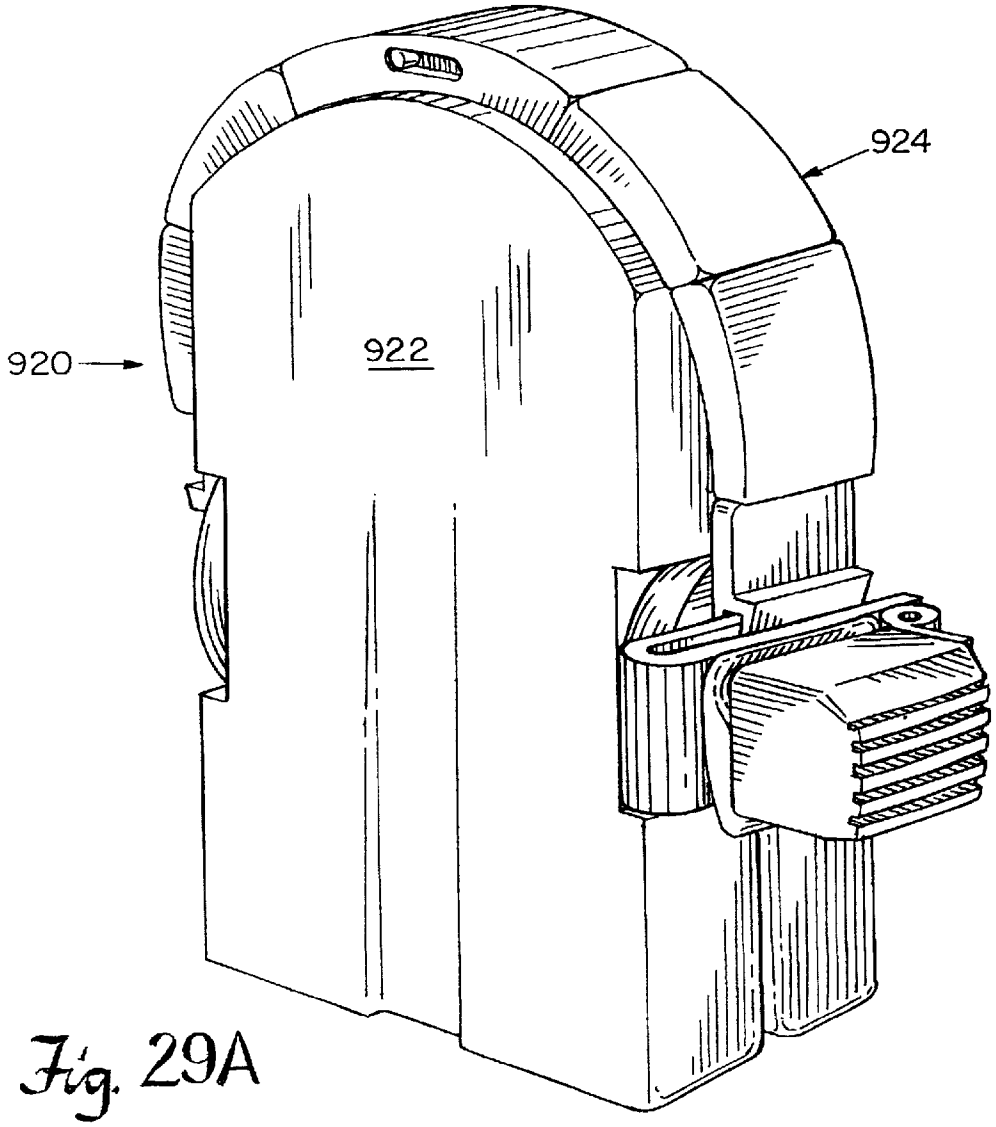

Fig. 29A

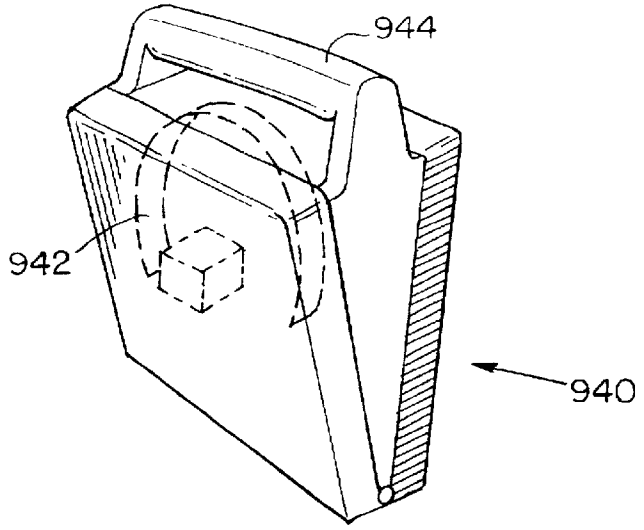

Fig. 30A

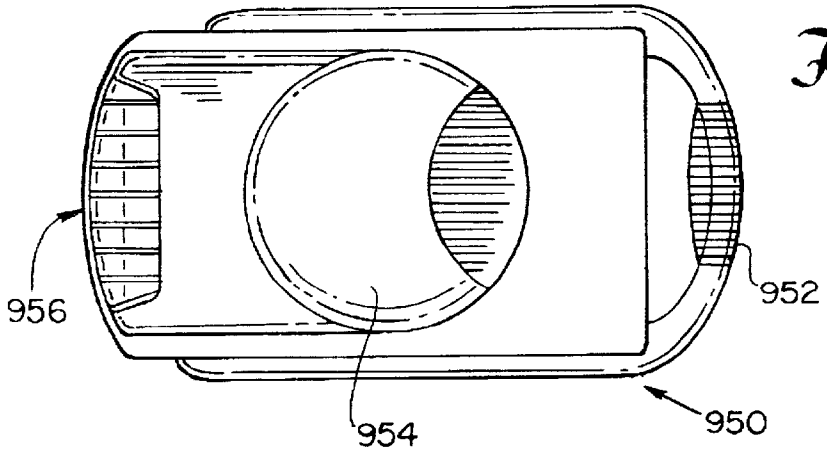

Fig. 30B

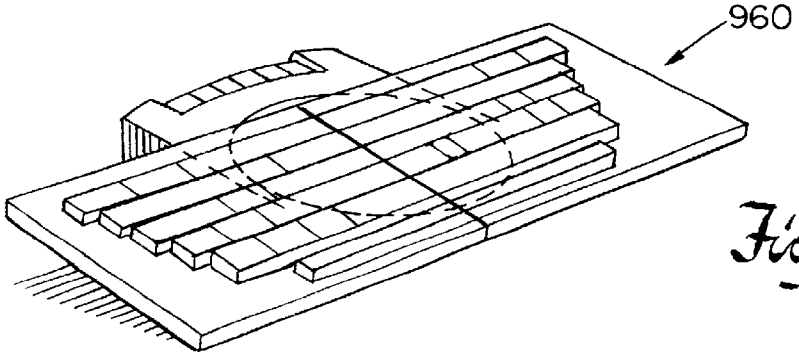

Fig. 30C

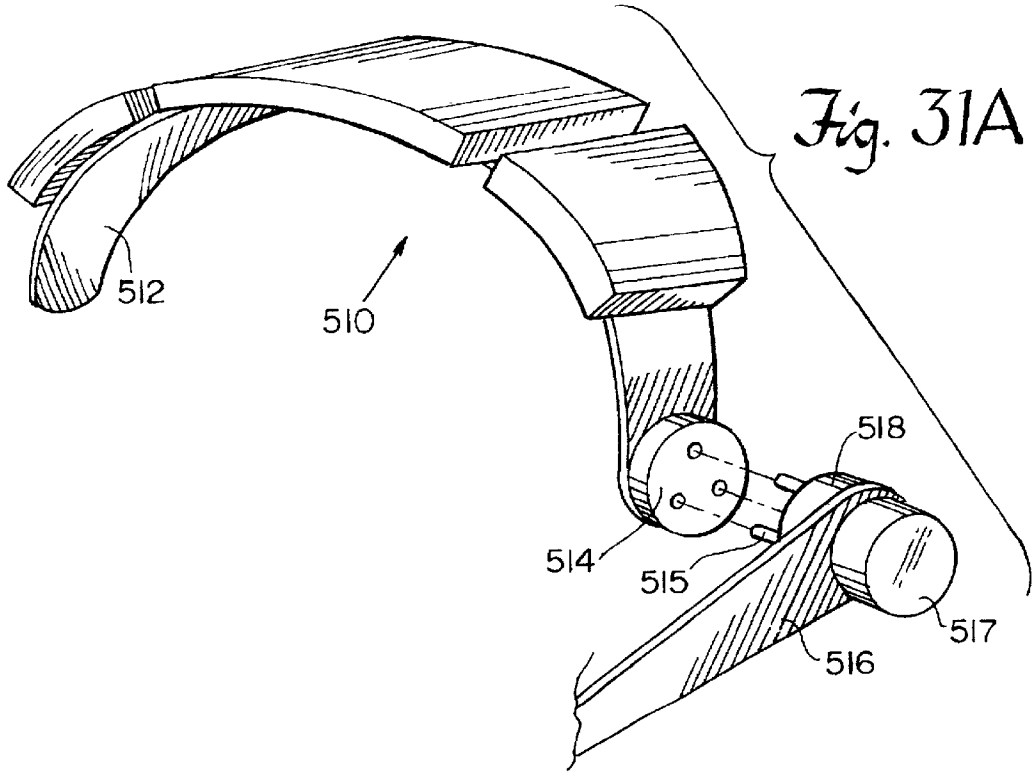

Fig. 31A

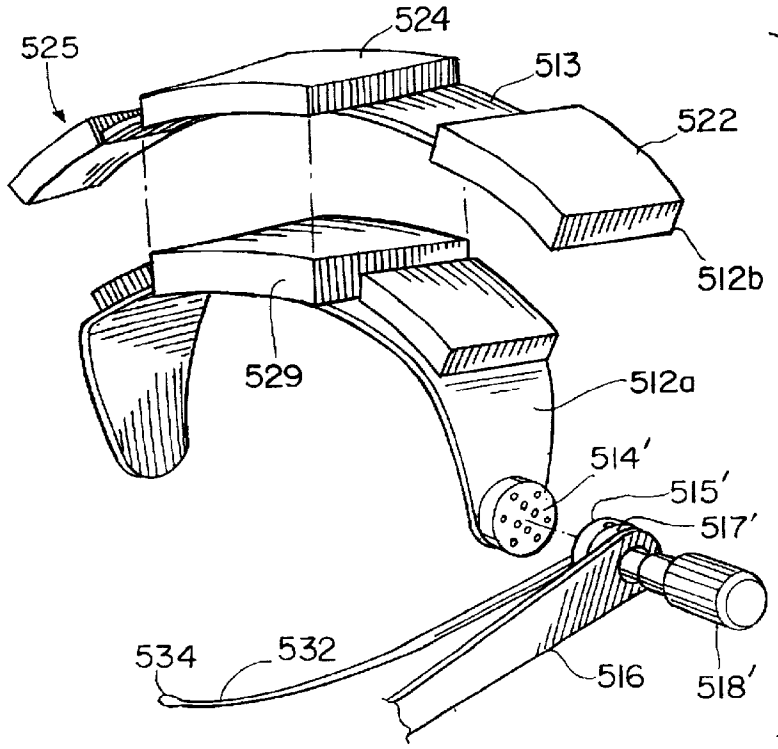

Fig. 31B

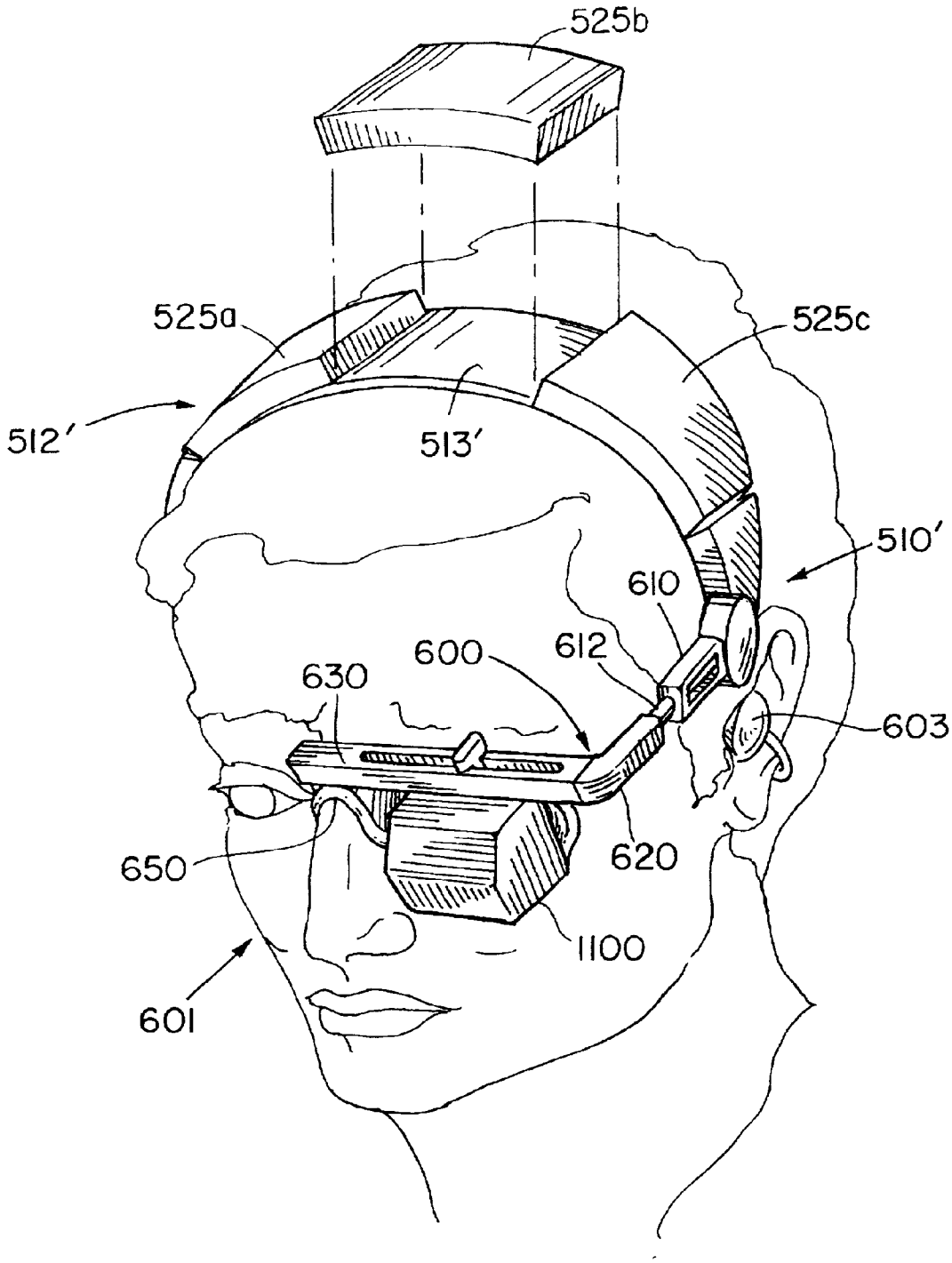

Fig. 32A

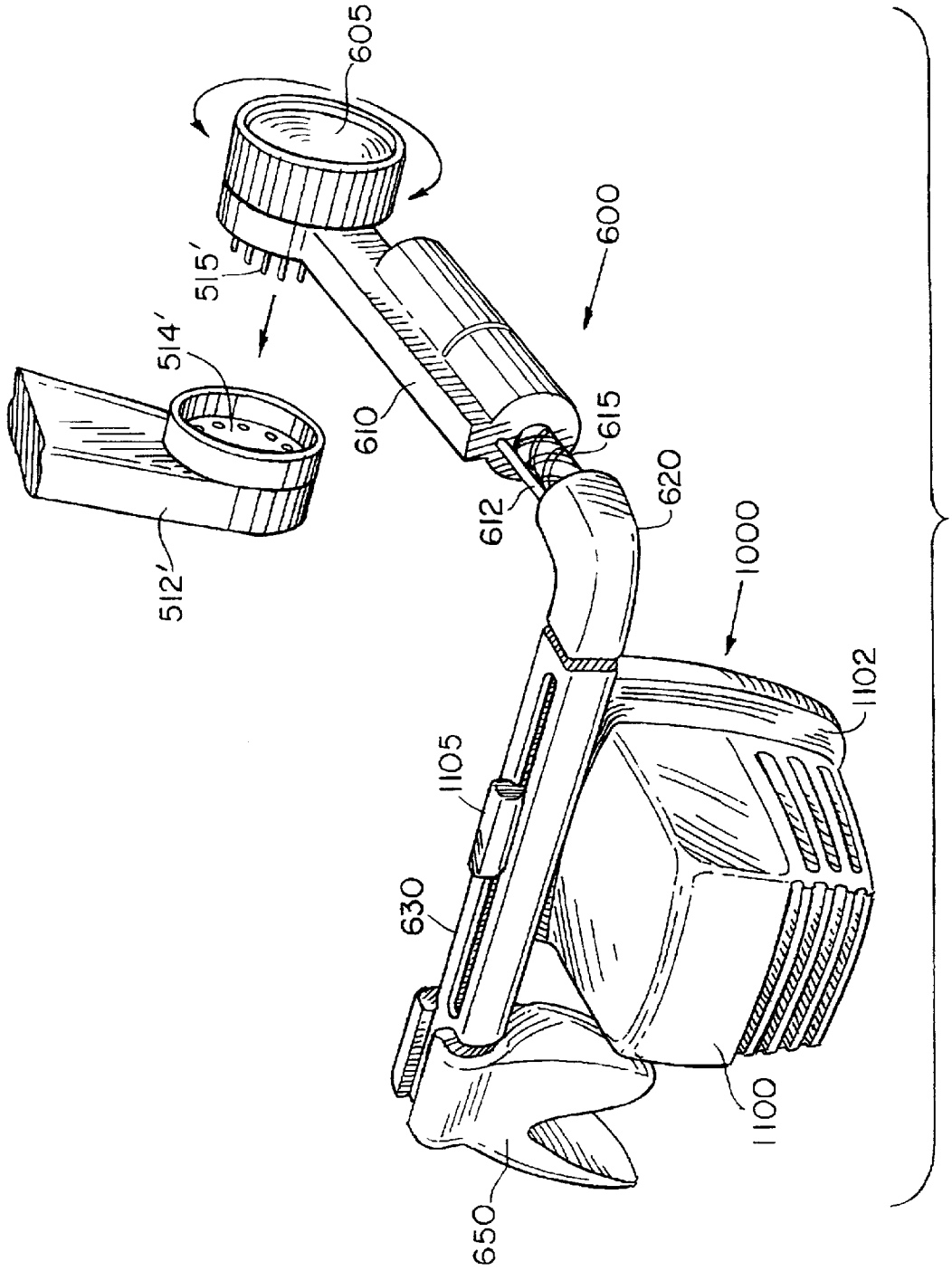

Fig. 32B

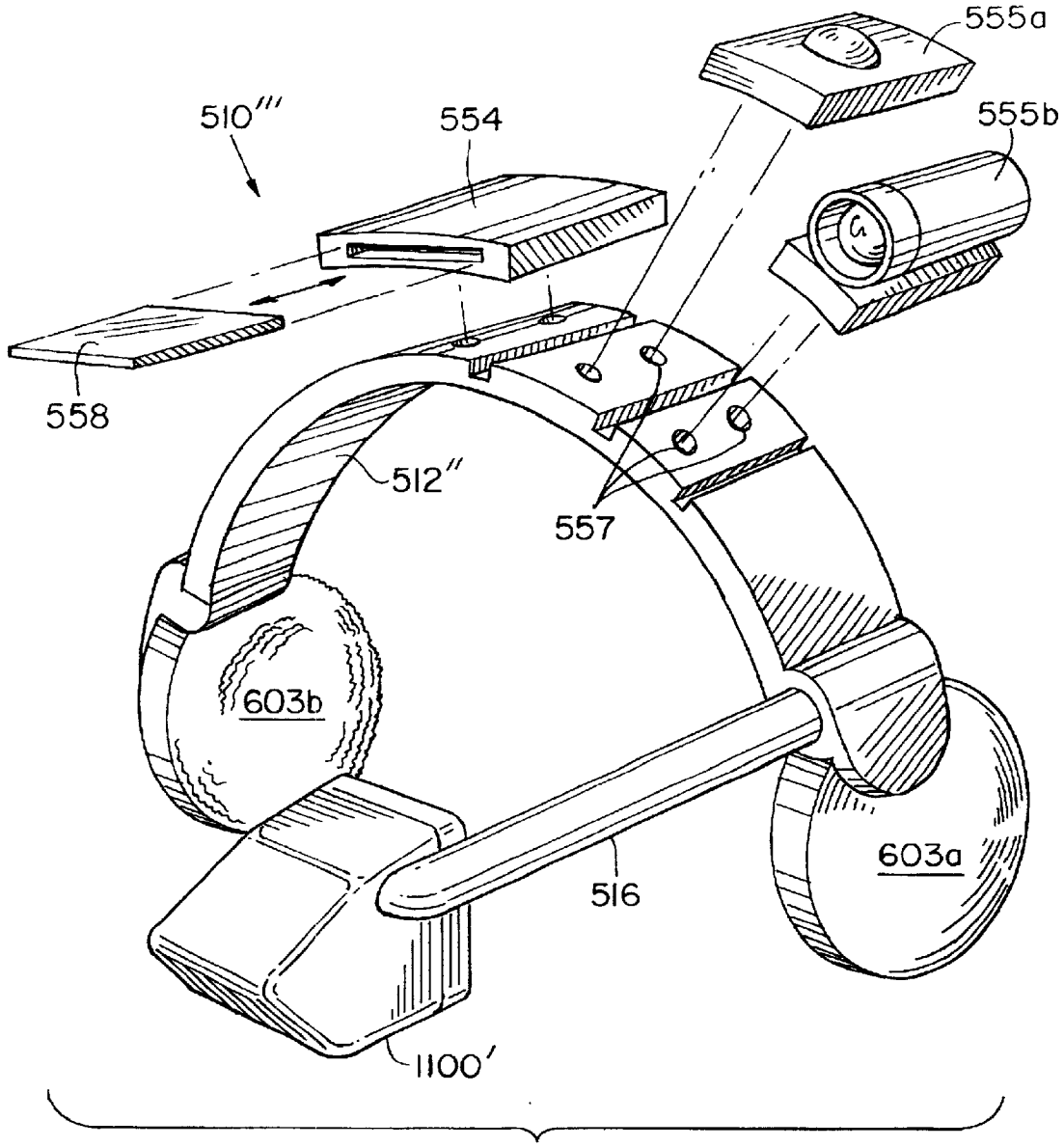

Fig. 33

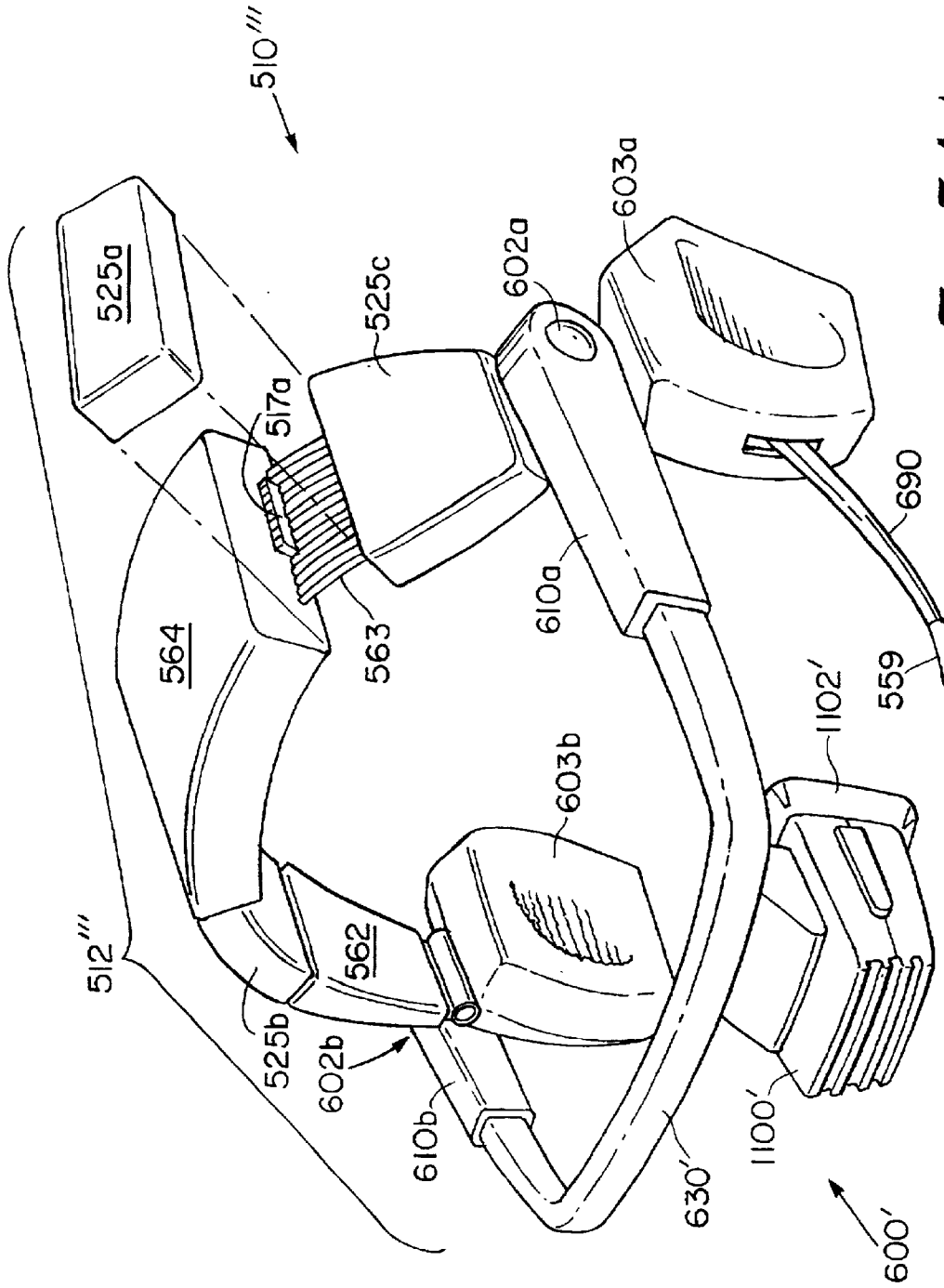
510'''
525a
517a
525c
602a
603a
690
564
563
610a
559
1102'
603b
512'''
562
525b
602b
610b
1100'
630'
600'

Fig. 34A

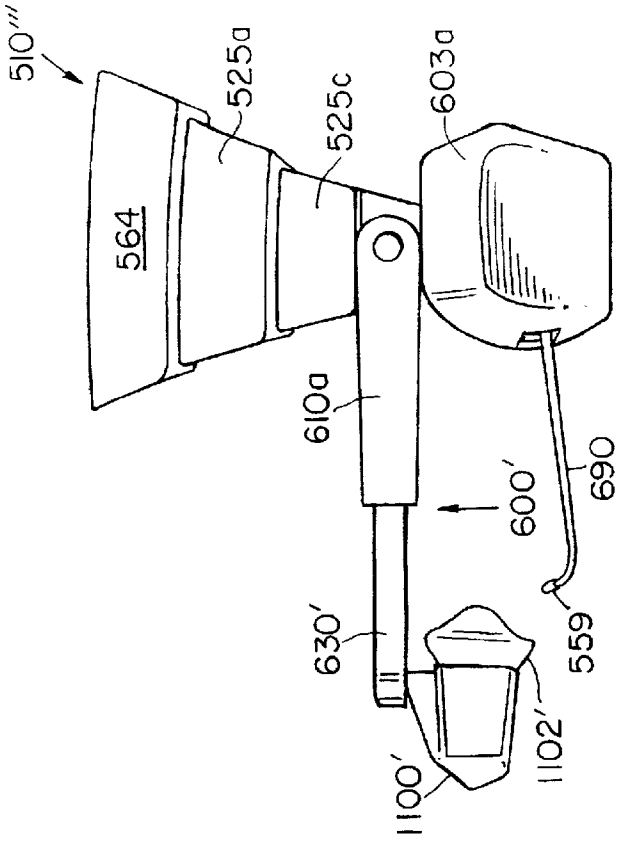

Fig. 34B

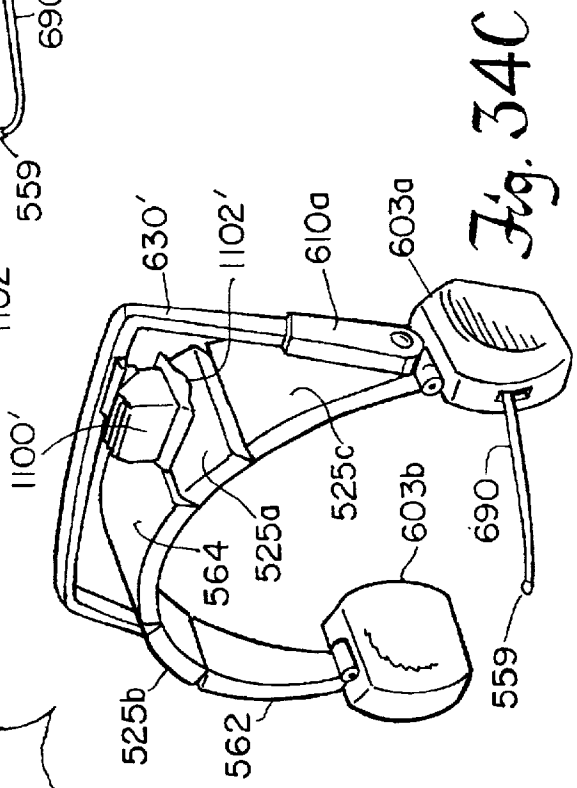

Fig. 34C

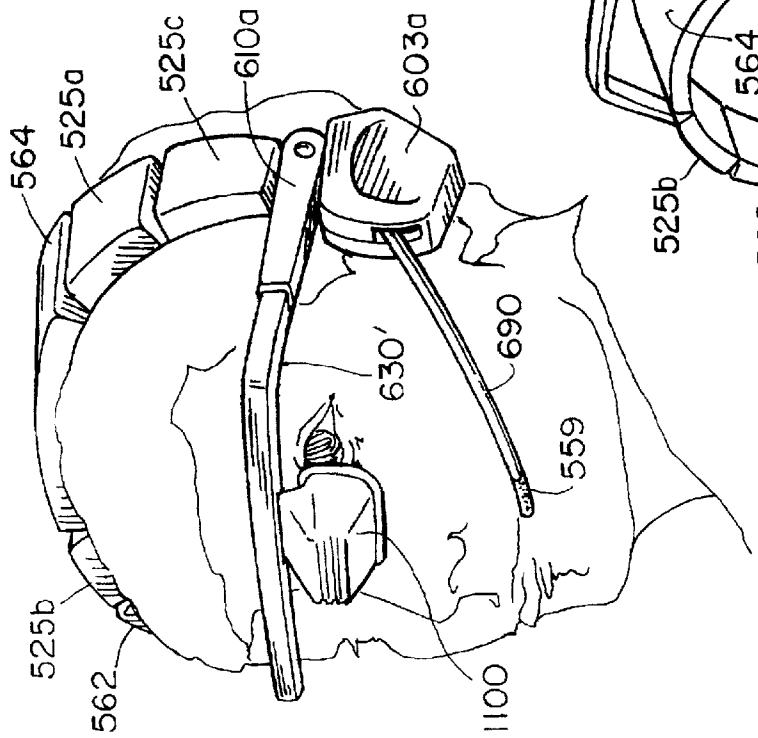

Fig. 34D

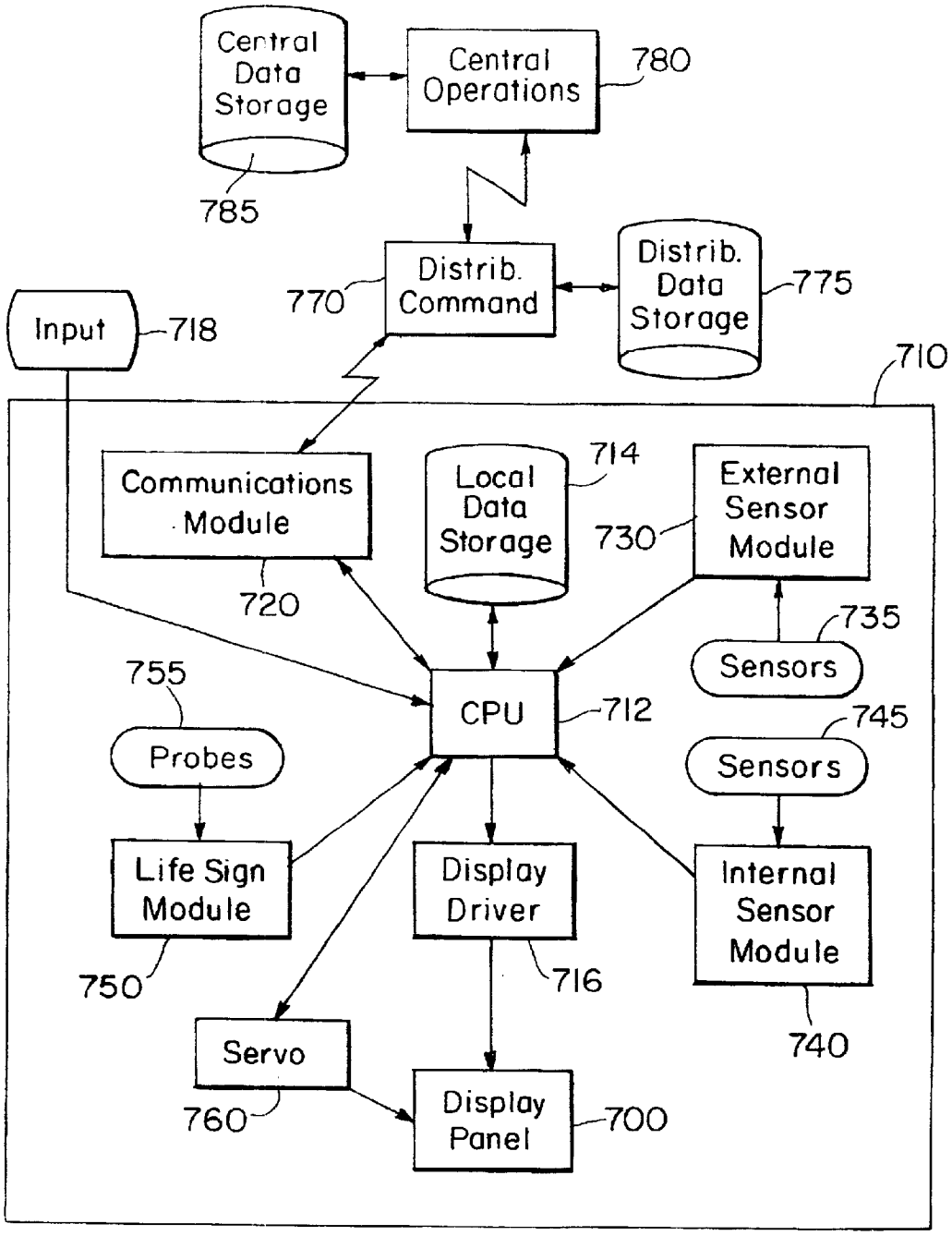
Central Data Storage
785
Central Operations
780
Distrib. Command
770
Distrib. Data Storage
775
Input
718
710
Communications Module
720
Local Data Storage
714
External Sensor Module
730
Sensors
735
CPU
712
Sensors
745
Probes
755
Life Sign Module
750
Display Driver
716
Internal Sensor Module
740
Servo
760
Display Panel
700

Fig. 35

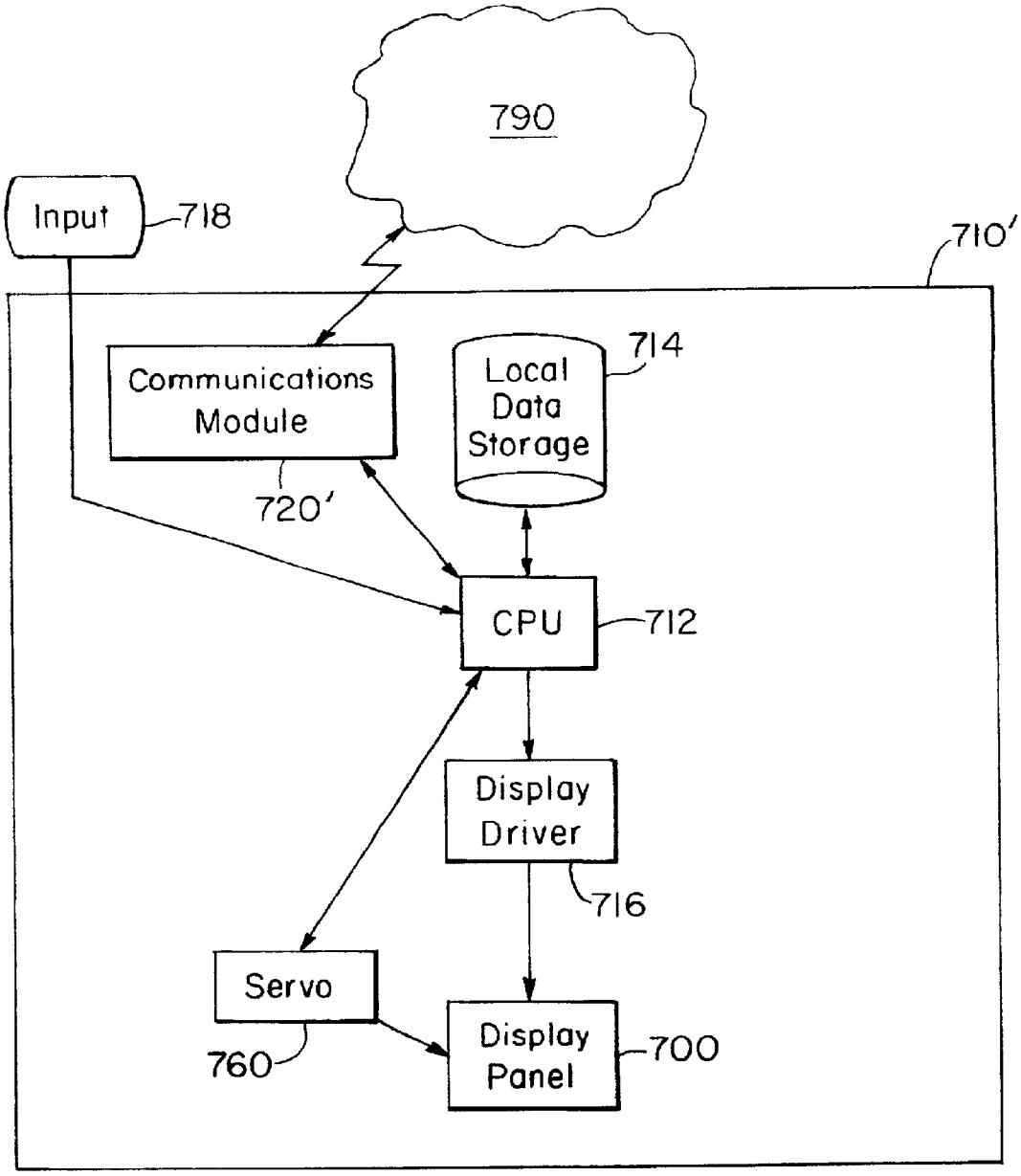
790
Input
718
710'
Communications Module
720'
Local Data Storage
714
CPU
712
Display Driver
716
Servo
760
Display Panel
700

Fig. 36

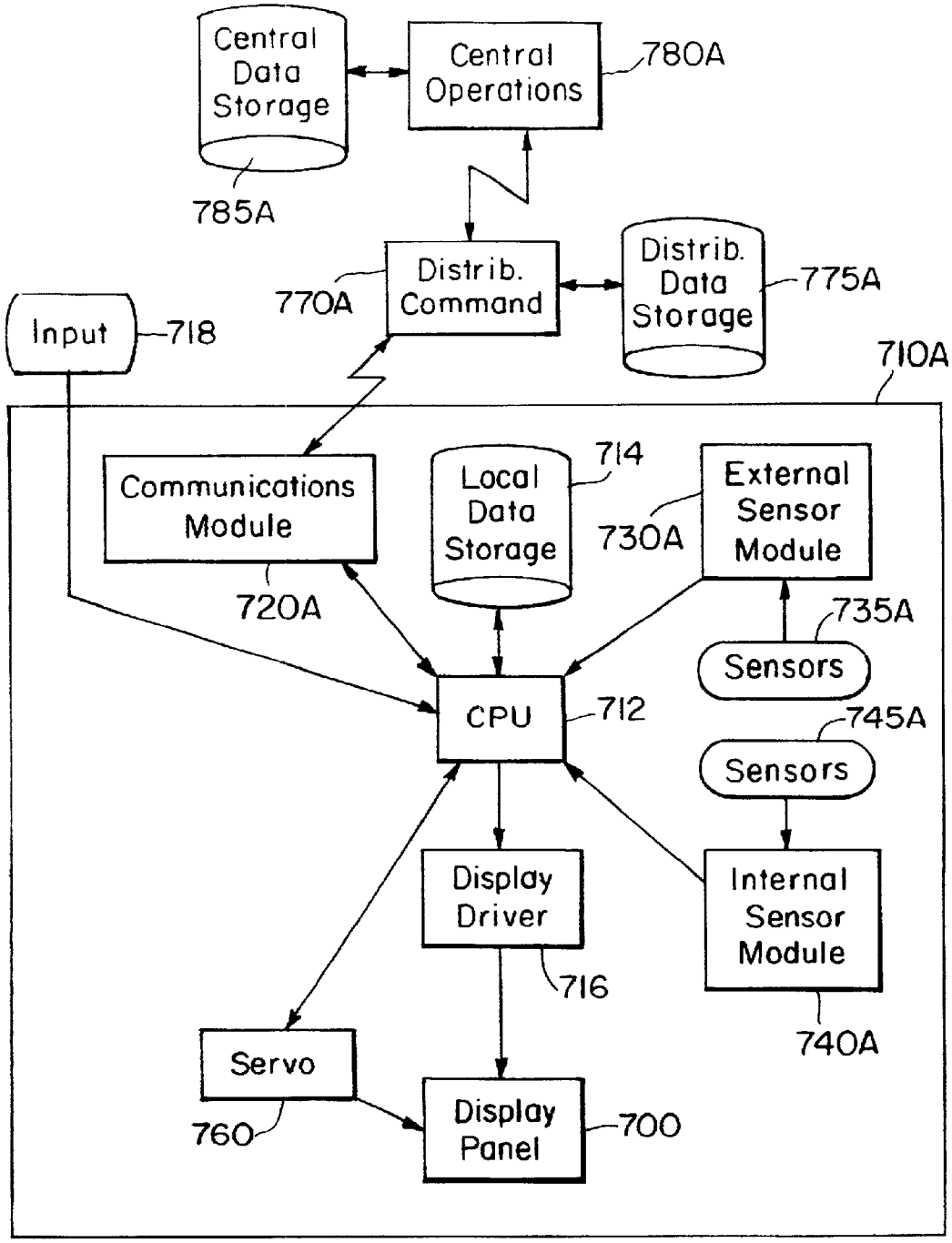
Central Data Storage
Central Operations
780A
785A
Distrib. Command
770A
Distrib. Data Storage
775A
Input
718
710A
Communications Module
720A
Local Data Storage
714
External Sensor Module
730A
735A
Sensors
CPU
712
745A
Sensors
Display Driver
716
Internal Sensor Module
740A
Servo
760
Display Panel
700

Fig. 37

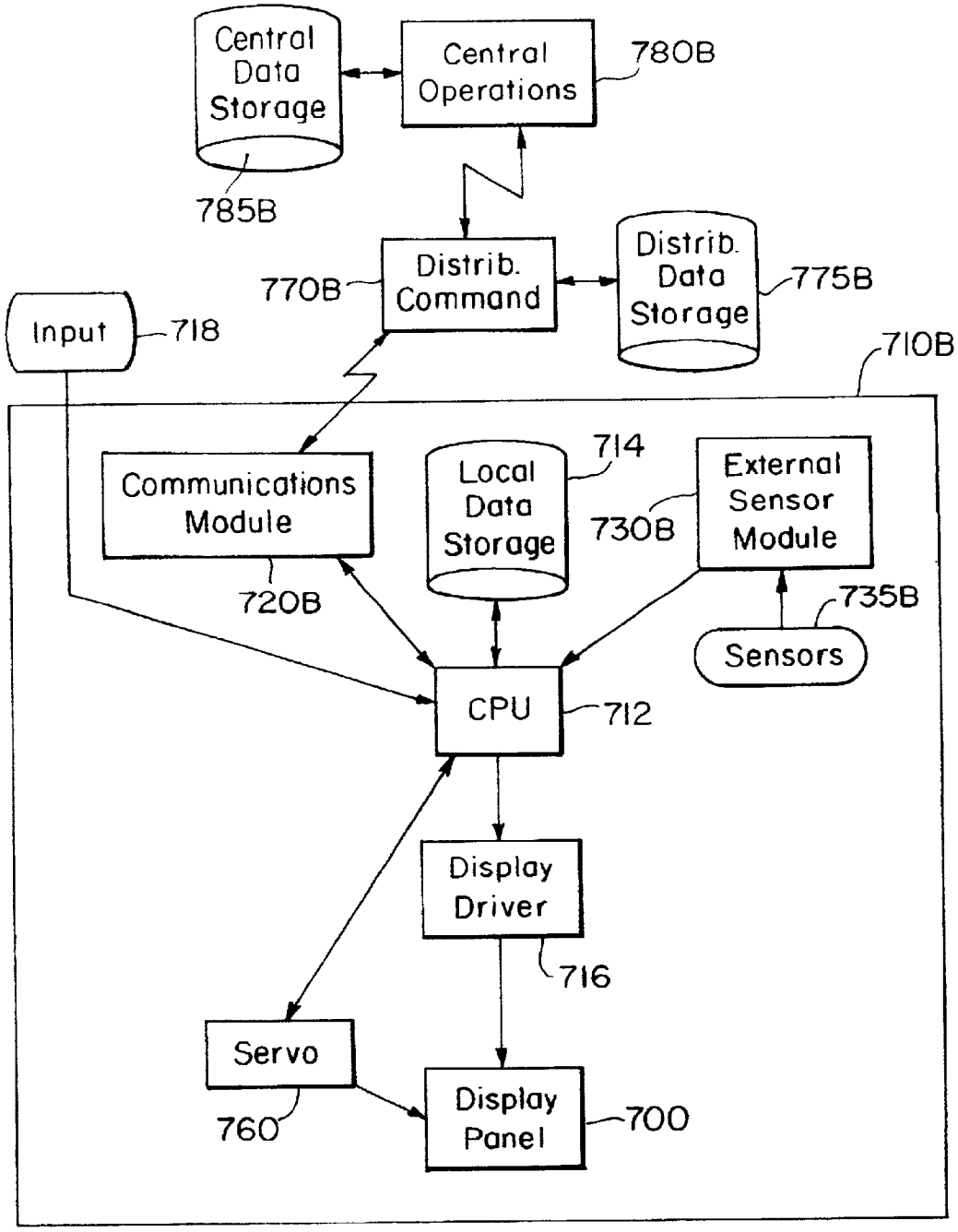
Central Data Storage
Central Operations
780B
785B
Distrib. Command
770B
Distrib. Data Storage
775B
Input
718
710B
Communications Module
720B
Local Data Storage
714
730B
External Sensor Module
735B
Sensors
CPU
712
Display Driver
716
Servo
760
Display Panel
700

Fig. 38

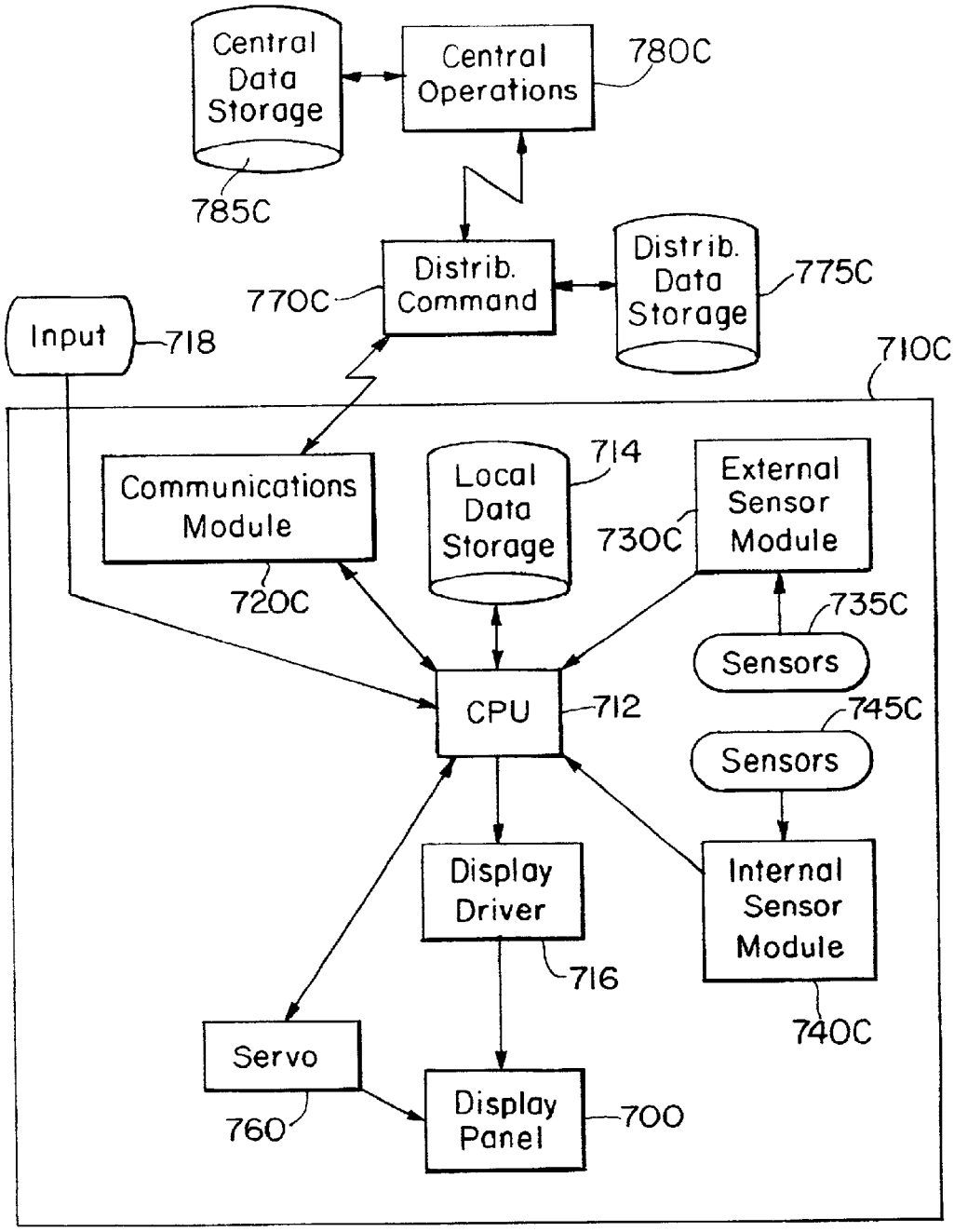
Central Data Storage
Central Operations
780C
785C
Distrib. Command
Distrib. Data Storage
775C
770C
Input
718
710C
Communications Module
Local Data Storage
714
External Sensor Module
730C
720C
735C
Sensors
CPU
712
745C
Sensors
Display Driver
Internal Sensor Module
716
740C
Servo
Display Panel
700
760

Fig. 39

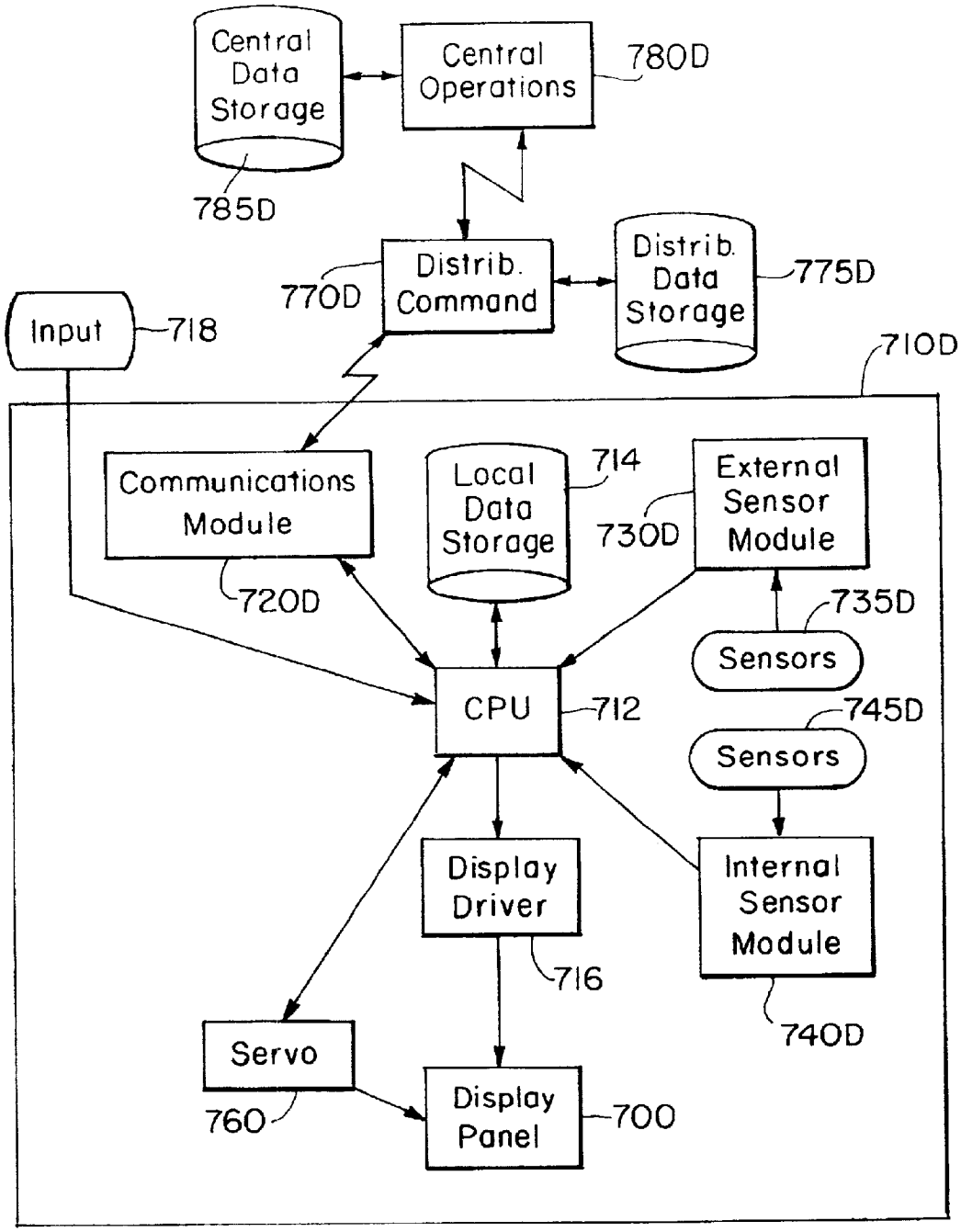
Central Data Storage
785D
Central Operations
780D
Distrib. Command
770D
Distrib. Data Storage
775D
Input
718
710D
Communications Module
720D
Local Data Storage
714
External Sensor Module
730D
735D
Sensors
CPU
712
745D
Sensors
Display Driver
716
Internal Sensor Module
740D
Servo
760
Display Panel
700

Fig. 40

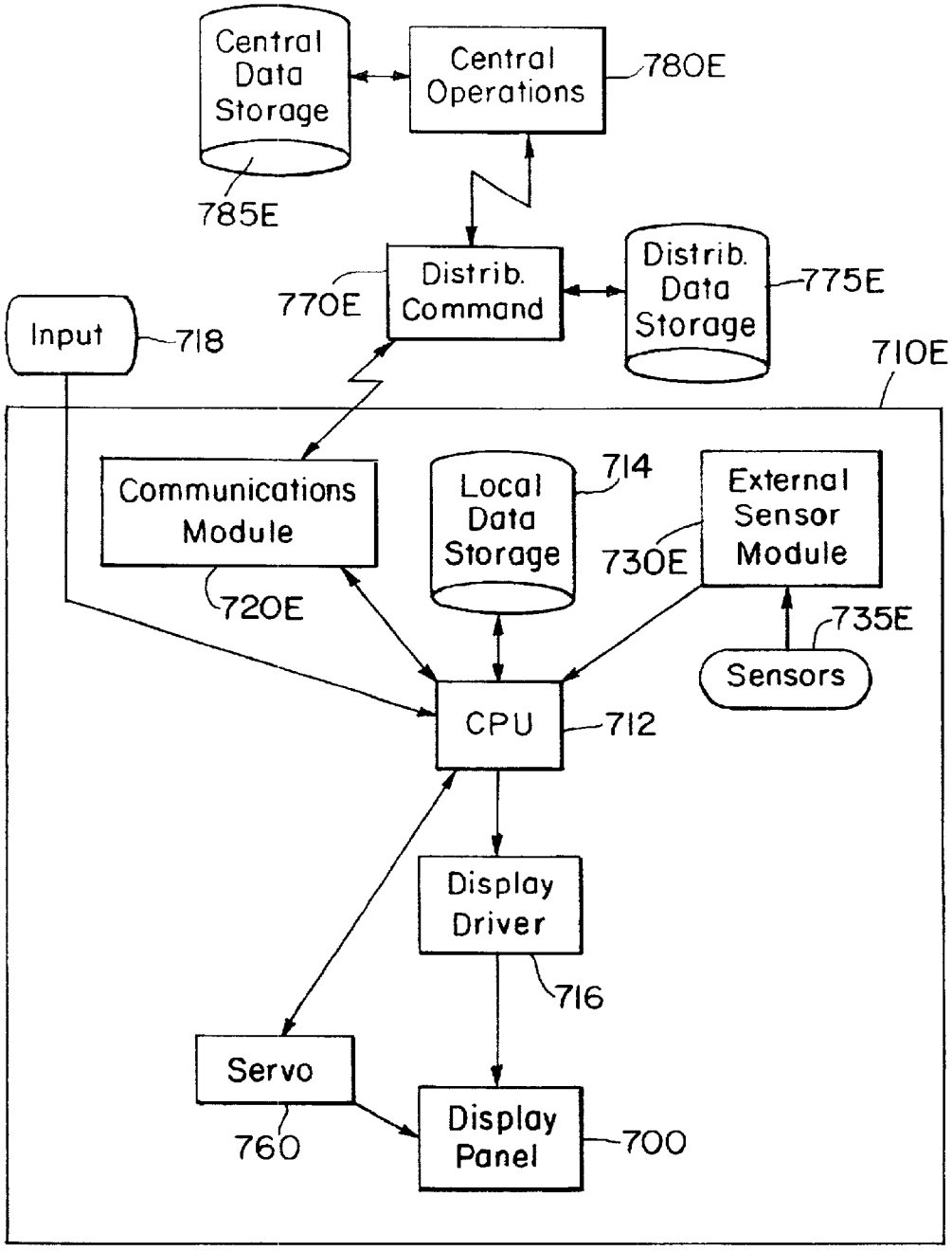
Central Data Storage
Central Operations
780E
785E
Distrib. Command
770E
Distrib. Data Storage
775E
Input
718
710E
Communications Module
720E
Local Data Storage
714
External Sensor Module
730E
735E
Sensors
CPU
712
Display Driver
716
Servo
760
Display Panel
700

Fig. 41

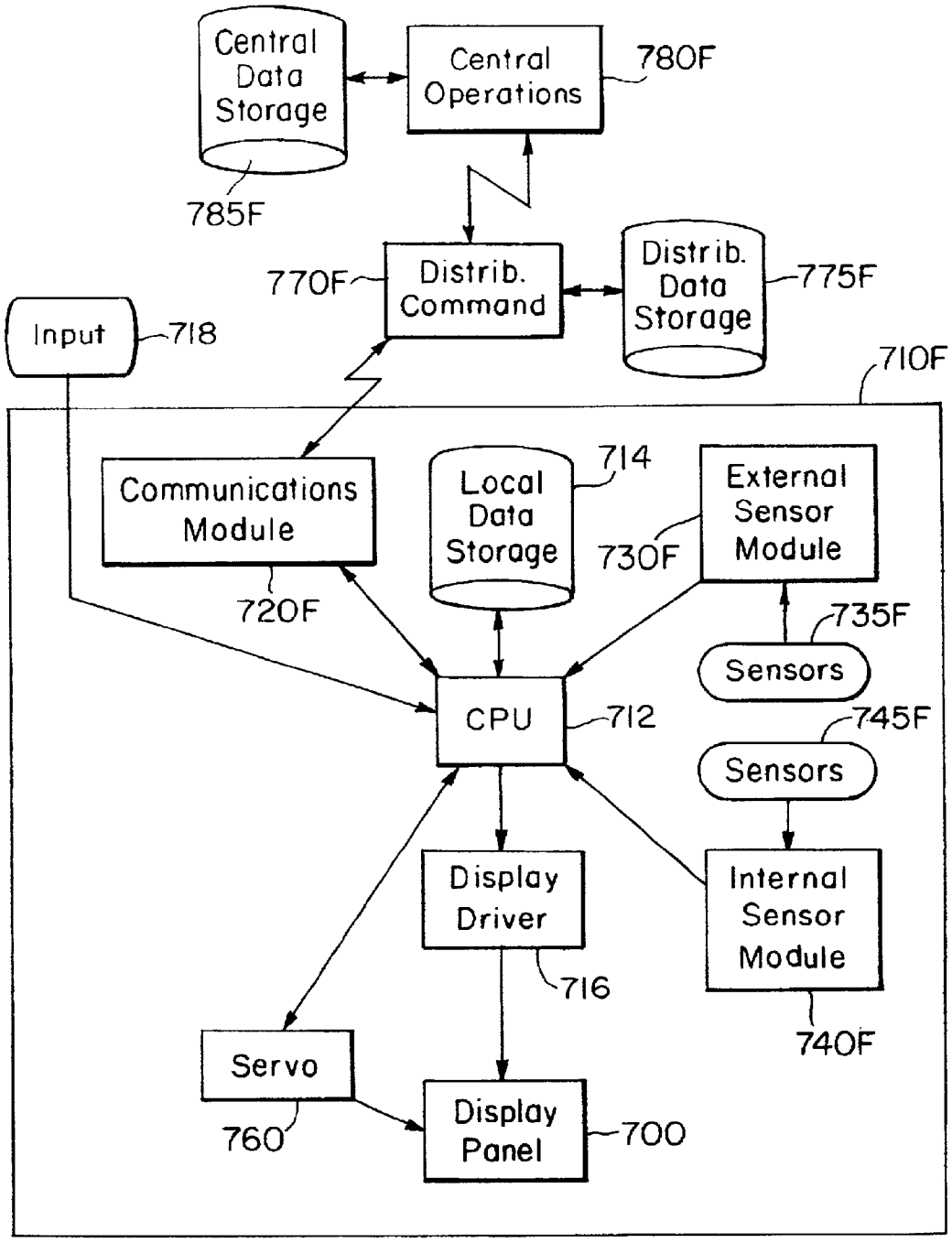
Central Data Storage
Central Operations
780F
785F
770F
Distrib. Command
Distrib. Data Storage
775F
Input
718
710F
Communications Module
720F
Local Data Storage
714
External Sensor Module
730F
735F
Sensors
CPU
712
745F
Sensors
Display Driver
716
Internal Sensor Module
740F
Servo
760
Display Panel
700

Fig. 42

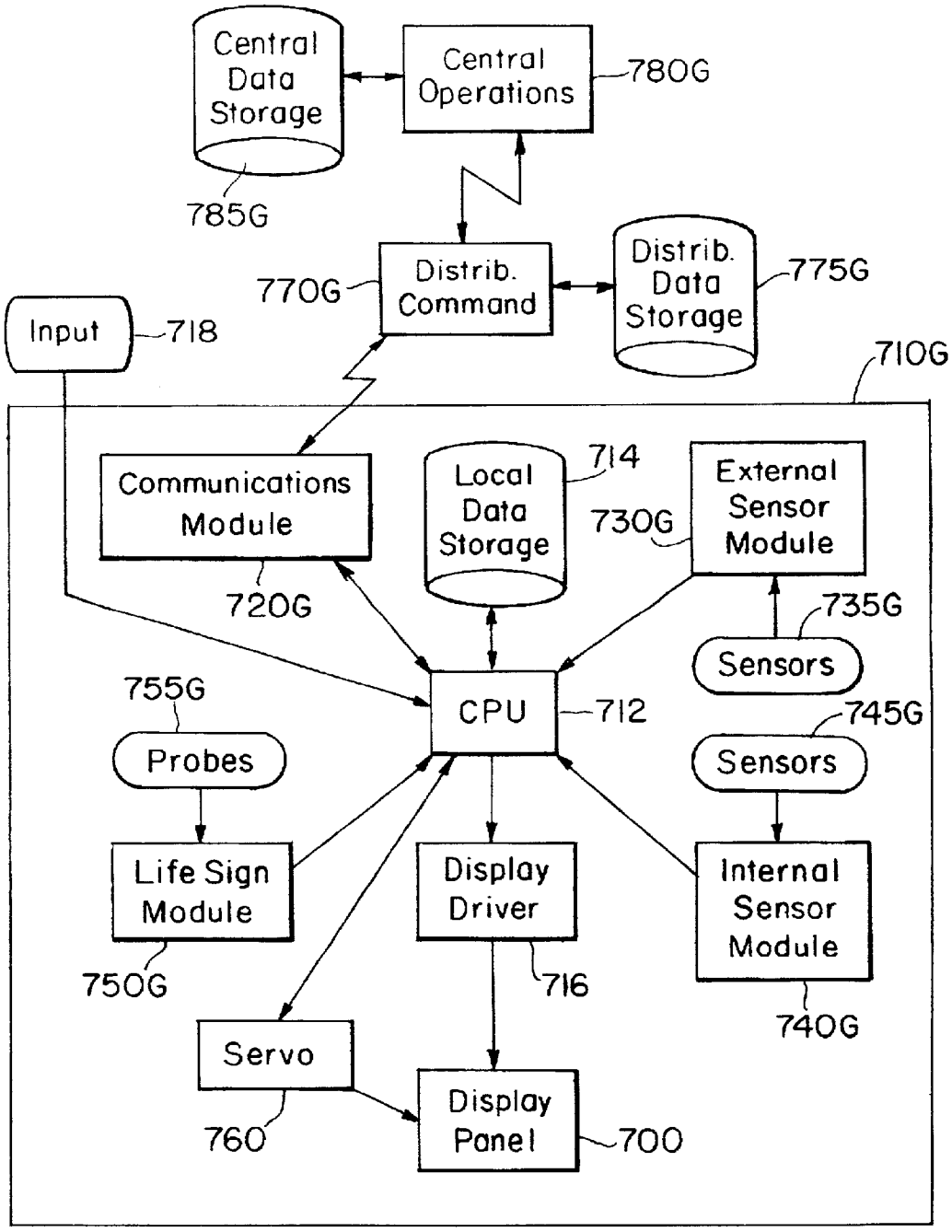
Central Data Storage
Central Operations
780G
785G
Distrib. Command
770G
Distrib. Data Storage
775G
Input
718
710G
Communications Module
720G
Local Data Storage
714
730G
External Sensor Module
735G
Sensors
CPU
712
755G
Probes
745G
Sensors
Life Sign Module
750G
Display Driver
716
Internal Sensor Module
740G
Servo
760
Display Panel
700

Fig. 43

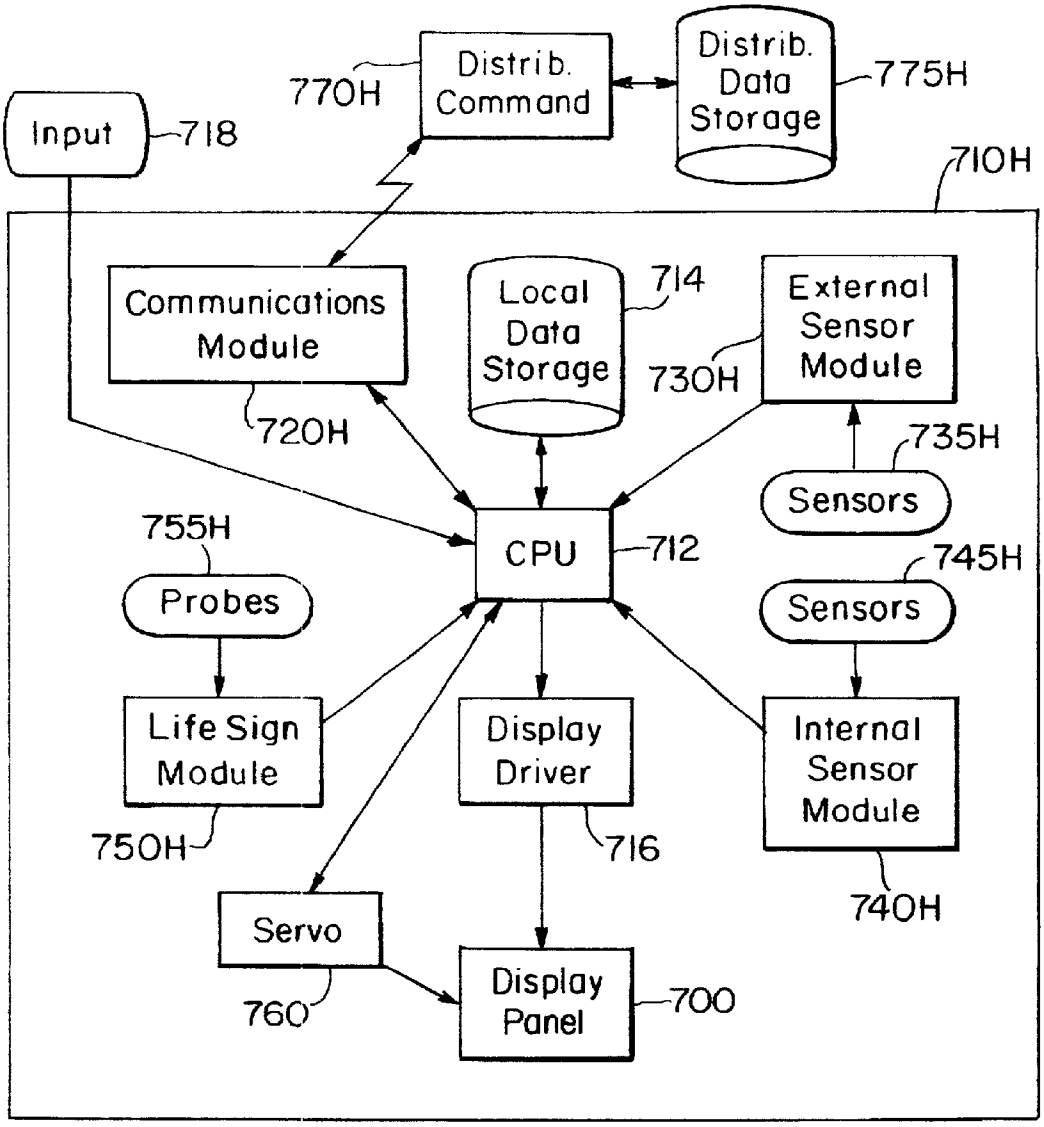
Distrib. Command
770H
Distrib. Data Storage
775H
Input
718
710H
Communications Module
720H
Local Data Storage
714
External Sensor Module
730H
735H
Sensors
CPU
712
755H
Probes
745H
Sensors
Life Sign Module
750H
Display Driver
716
Internal Sensor Module
740H
Servo
760
Display Panel
700

Fig. 44

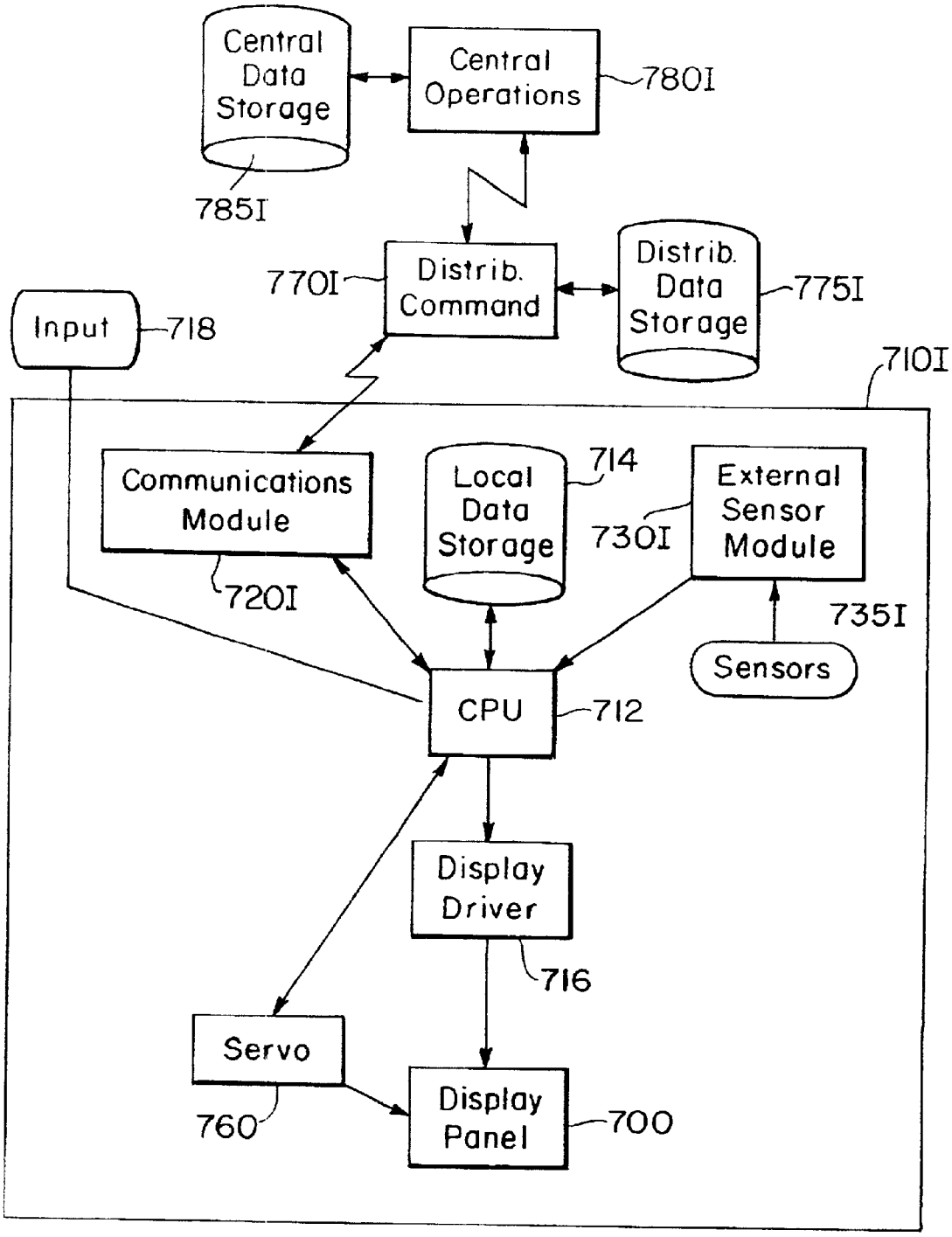
Central Data Storage
Central Operations
780I
785I
Distrib. Command
770I
Distrib. Data Storage
775I
Input
718
710I
Communications Module
720I
Local Data Storage
714
External Sensor Module
730I
735I
Sensors
CPU
712
Display Driver
716
Servo
760
Display Panel
700

Fig. 45

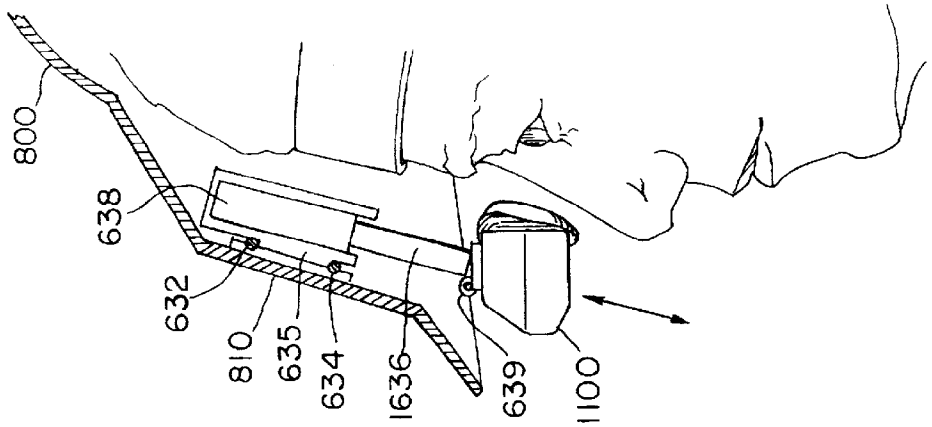

Fig. 46B

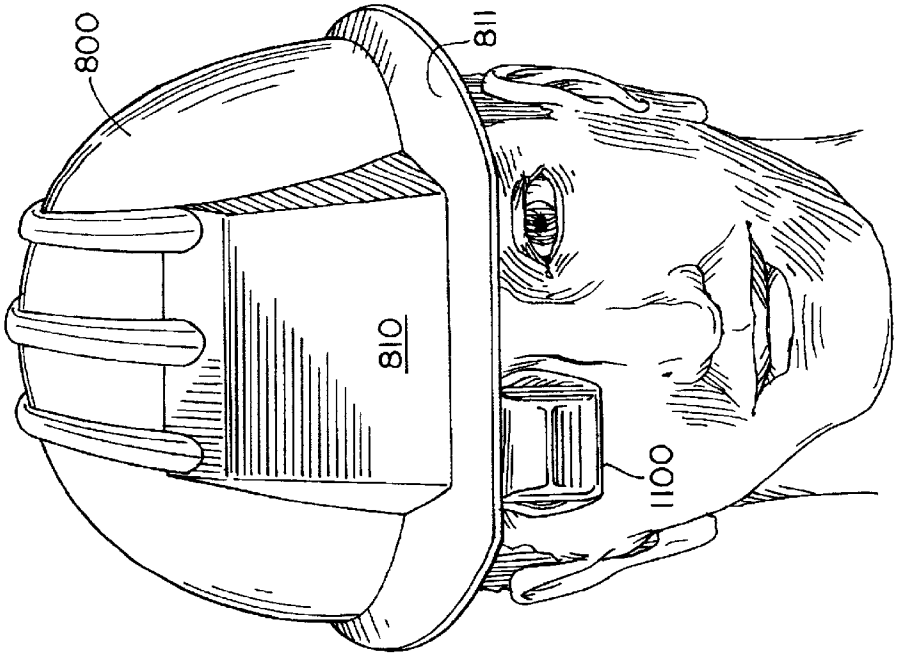

Fig. 46A

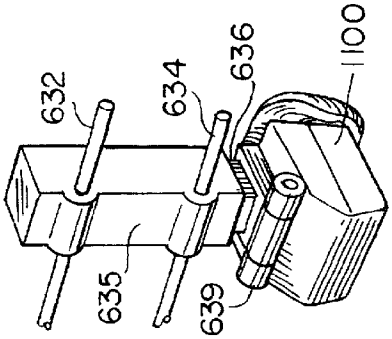

Fig. 46E

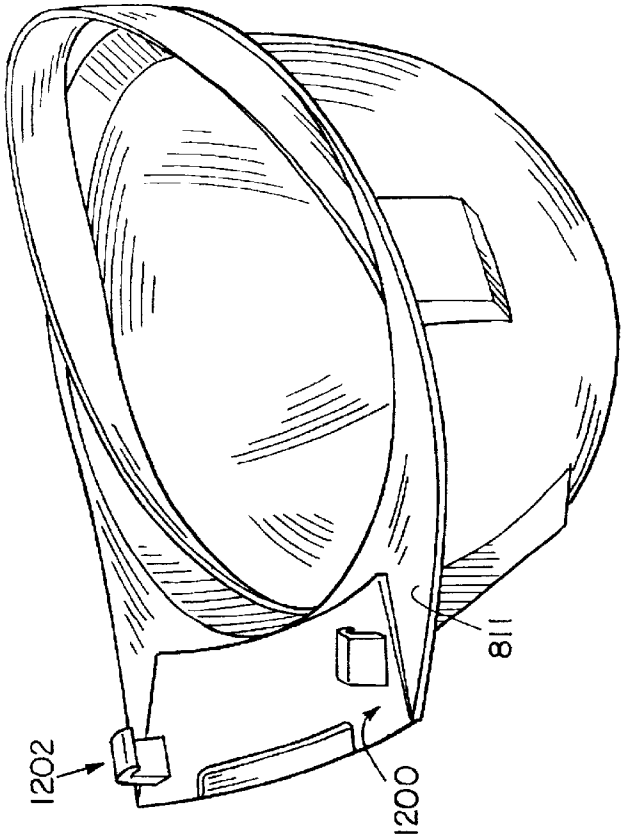

Fig. 46D

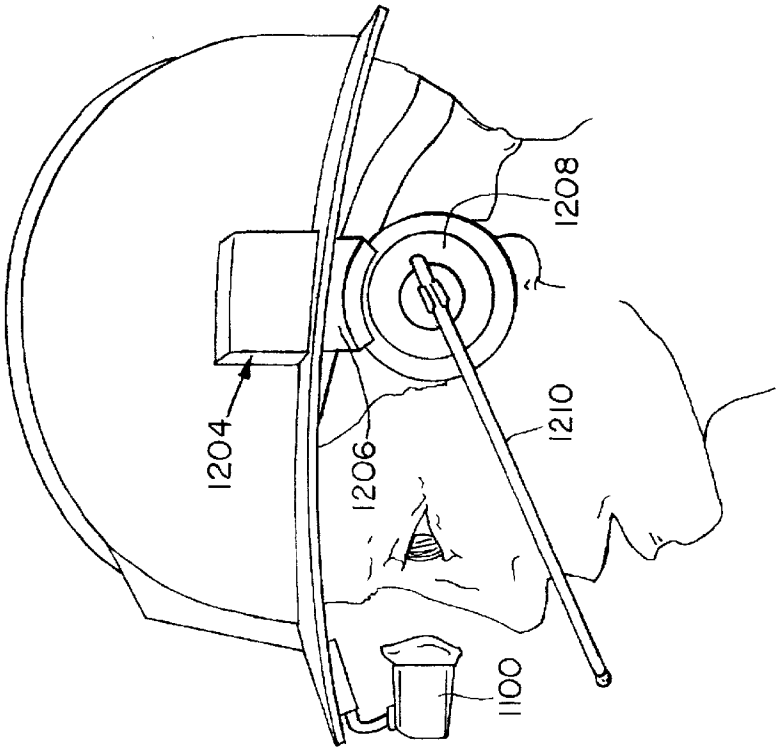

Fig. 46C

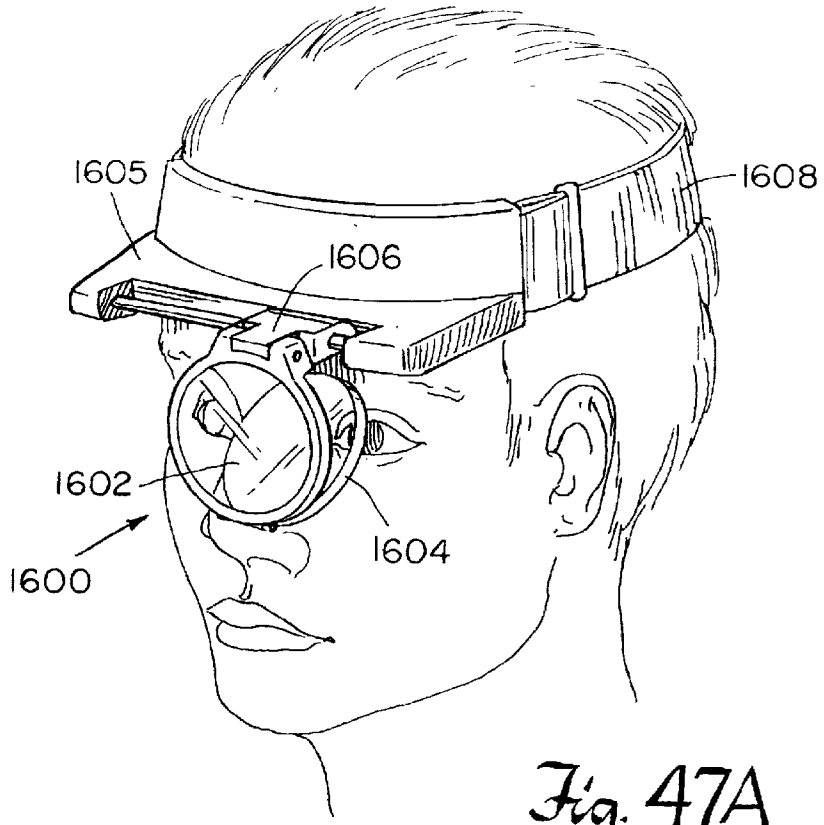

Fig. 47A

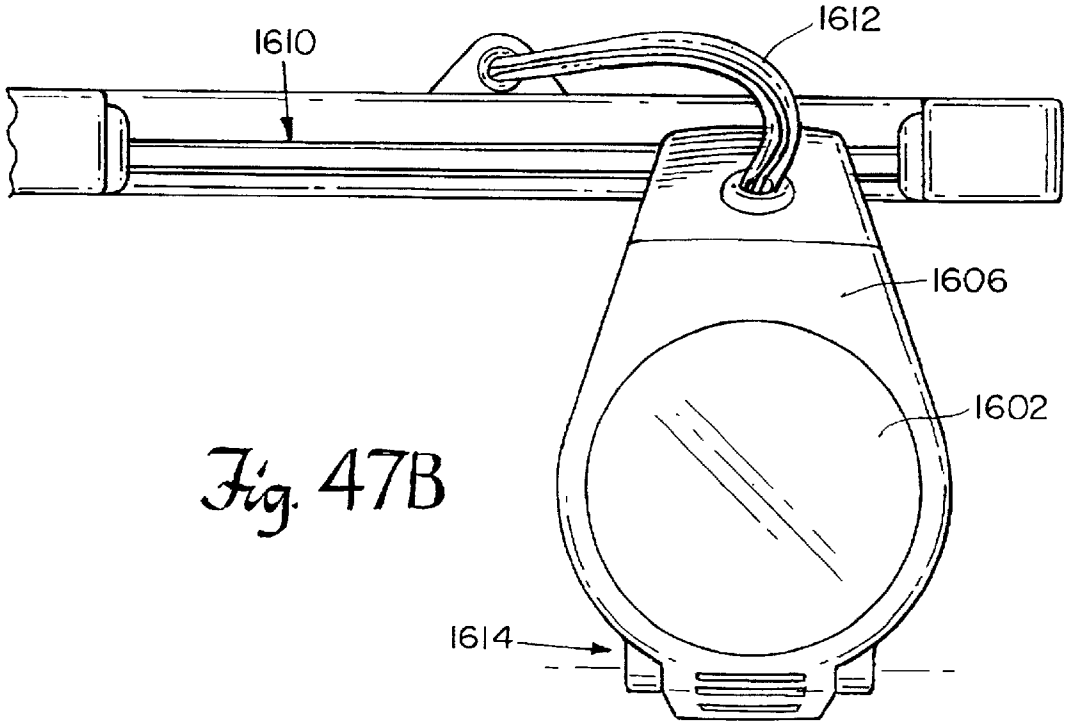

Fig. 47B

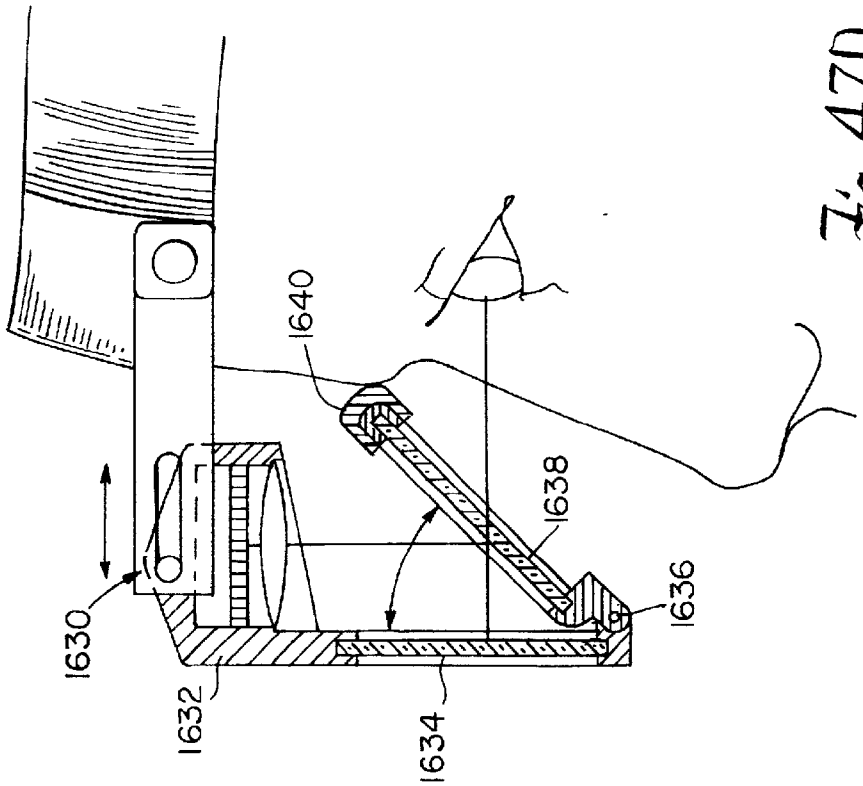

Fig. 47D

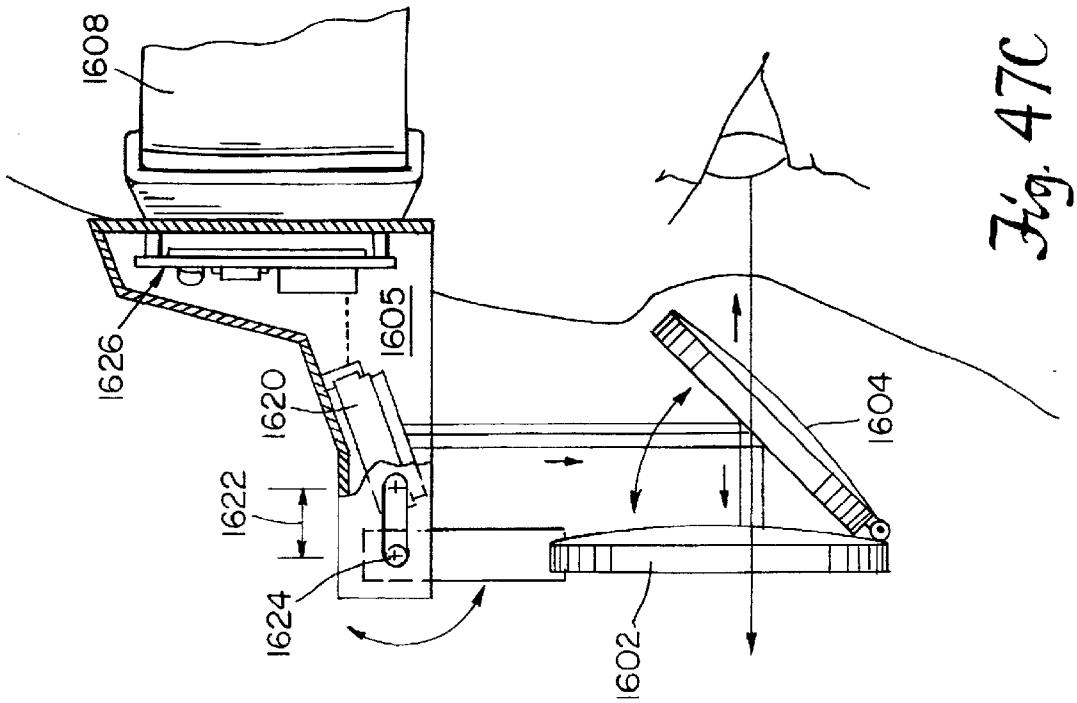

Fig. 47C

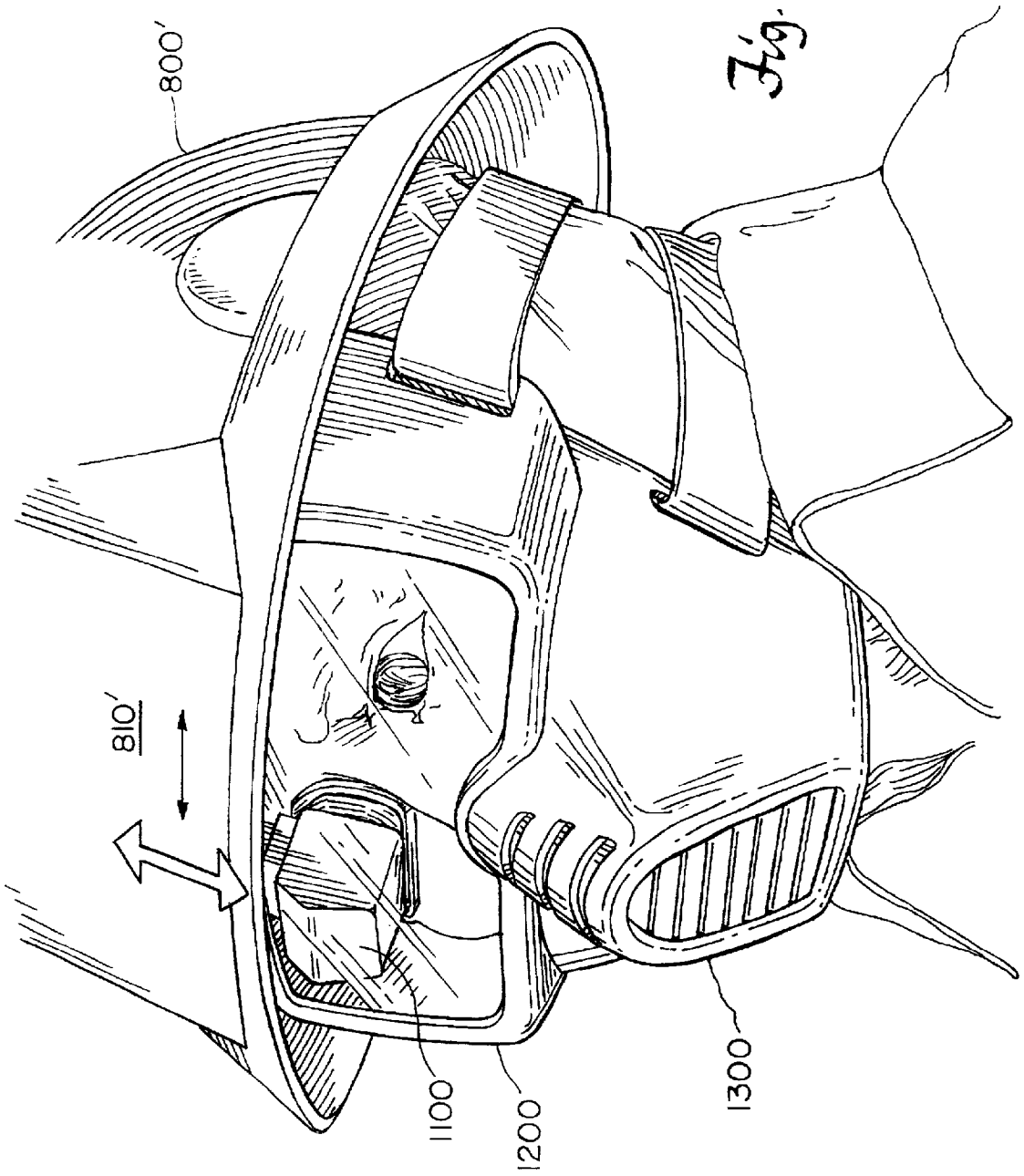

Fig. 48

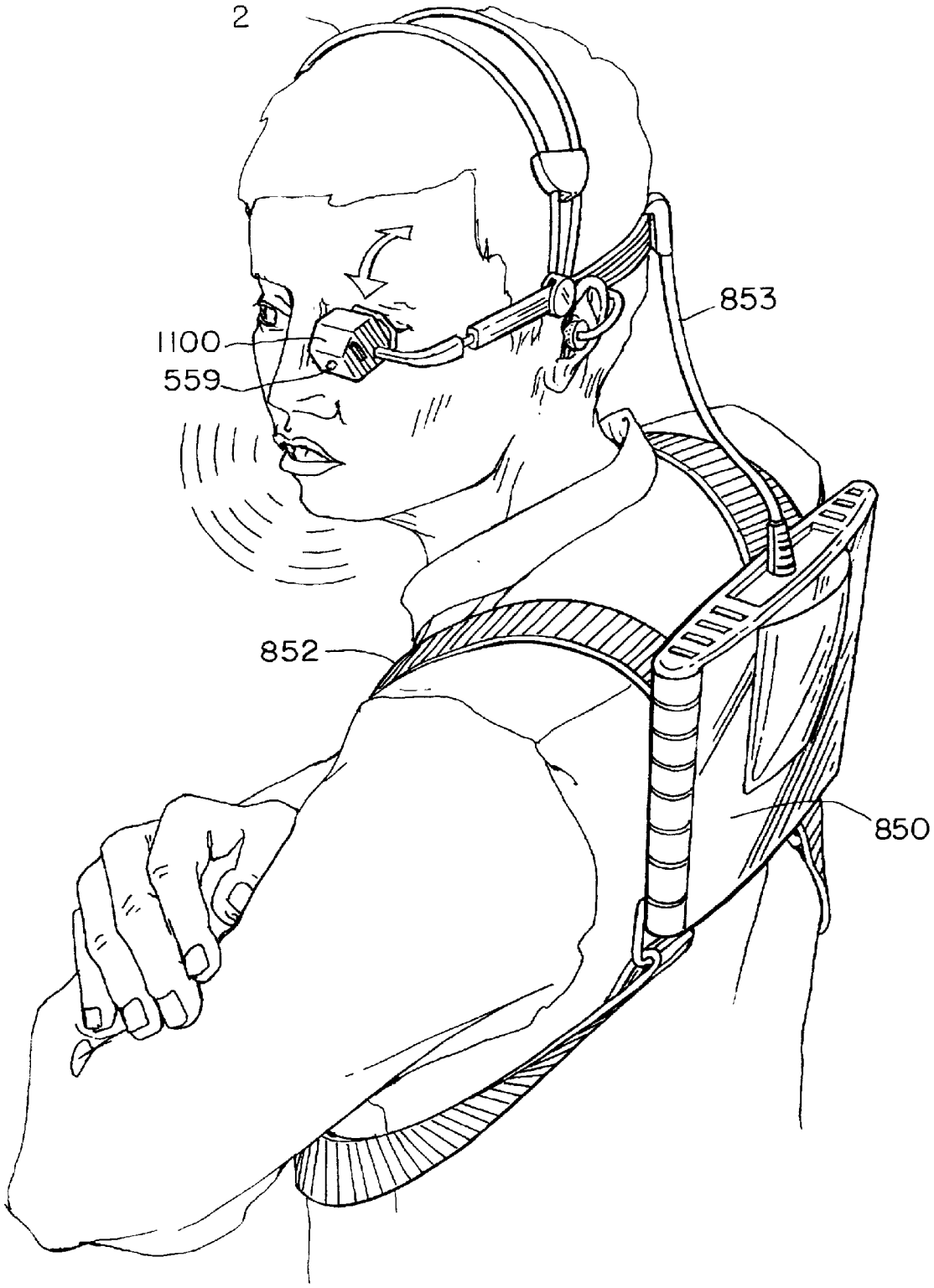

Fig. 49

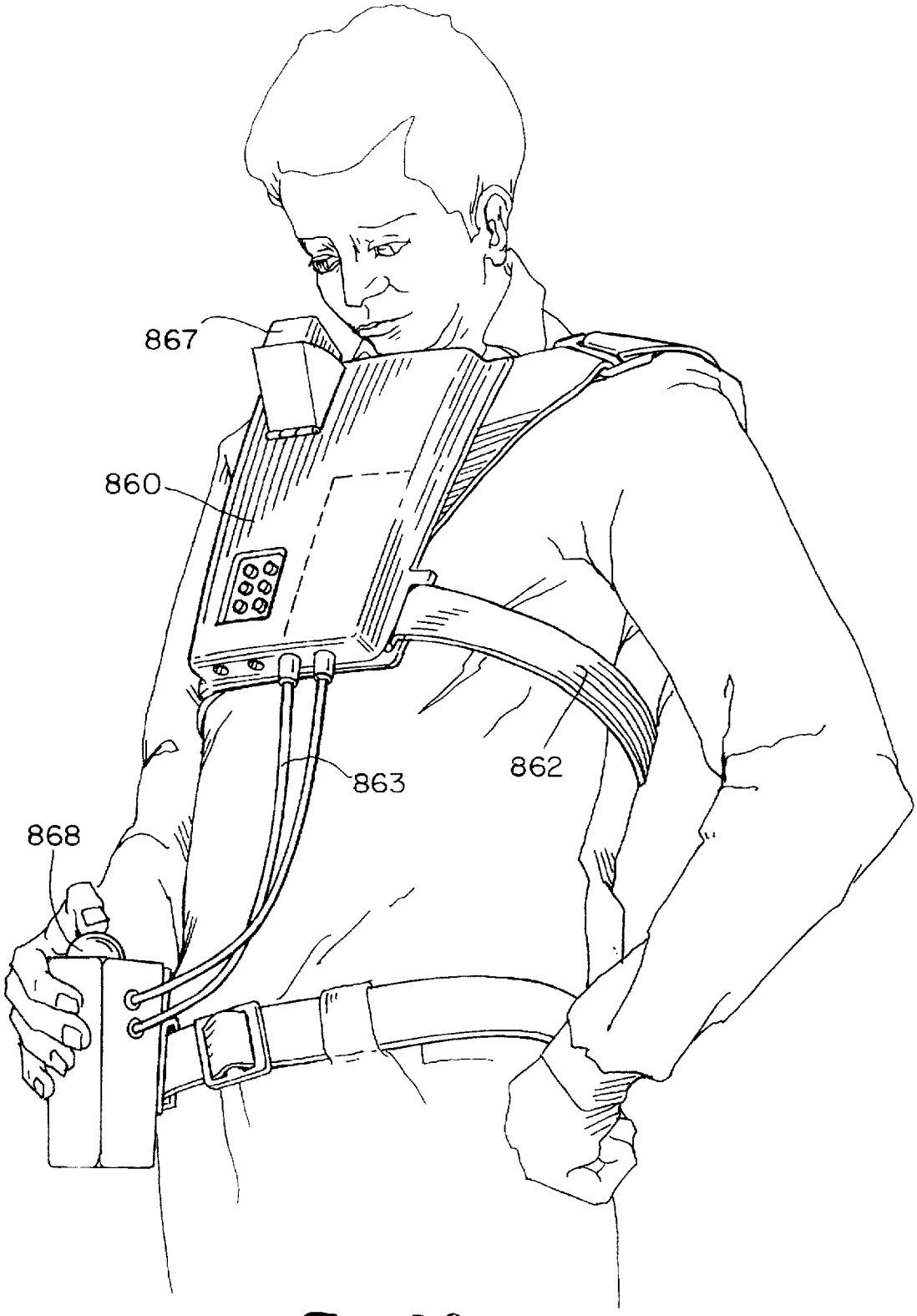

Fig. 50

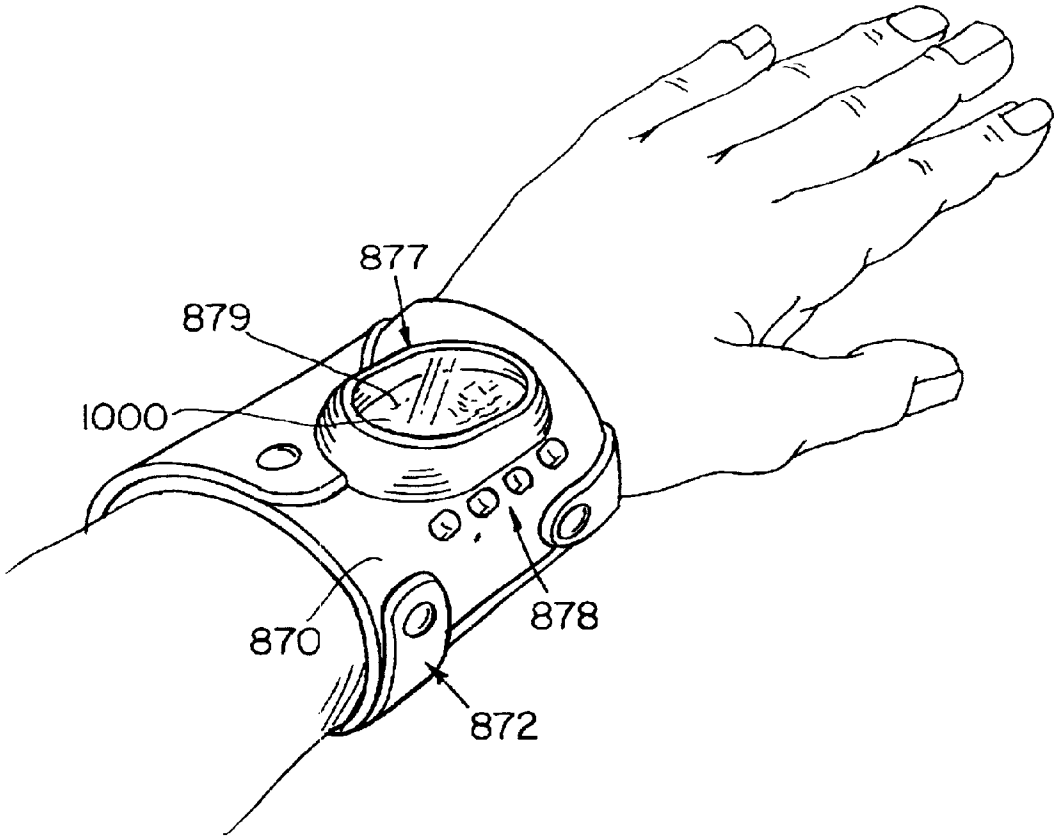

Fig. 51

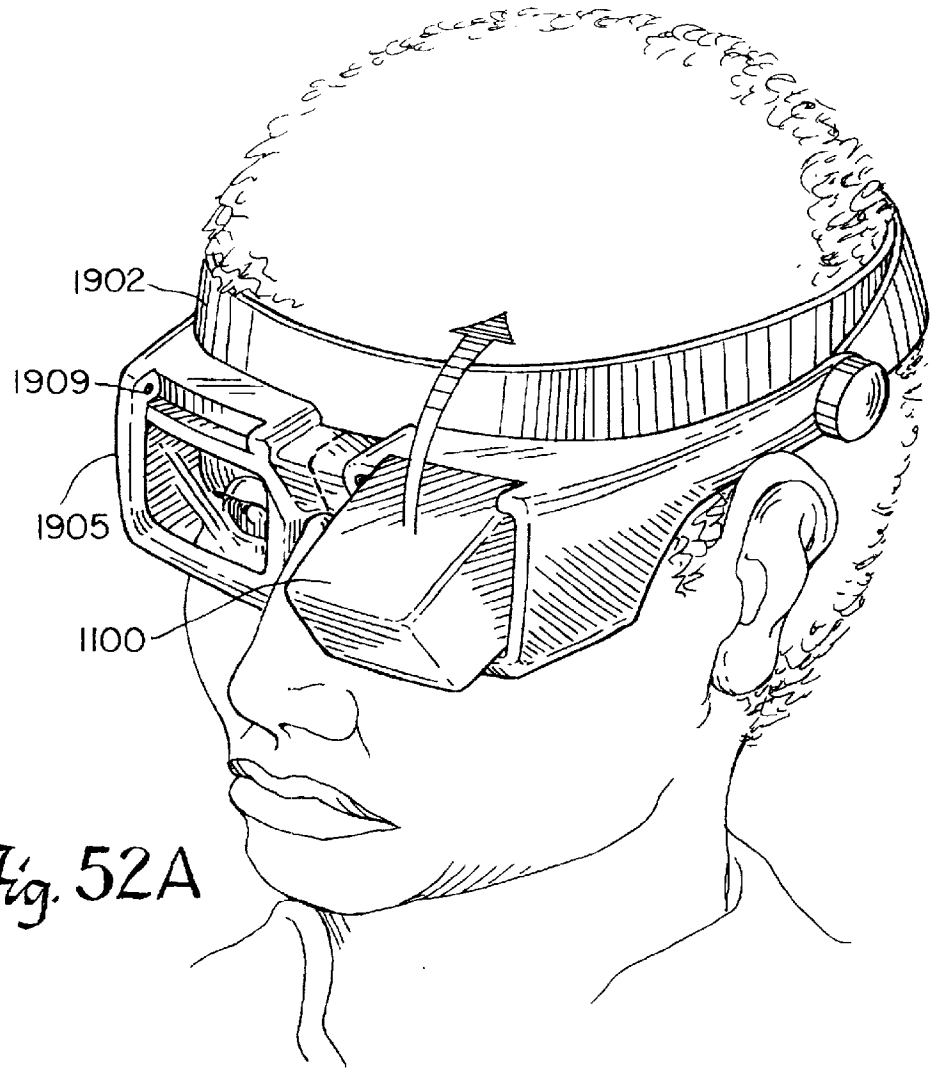

Fig. 52A

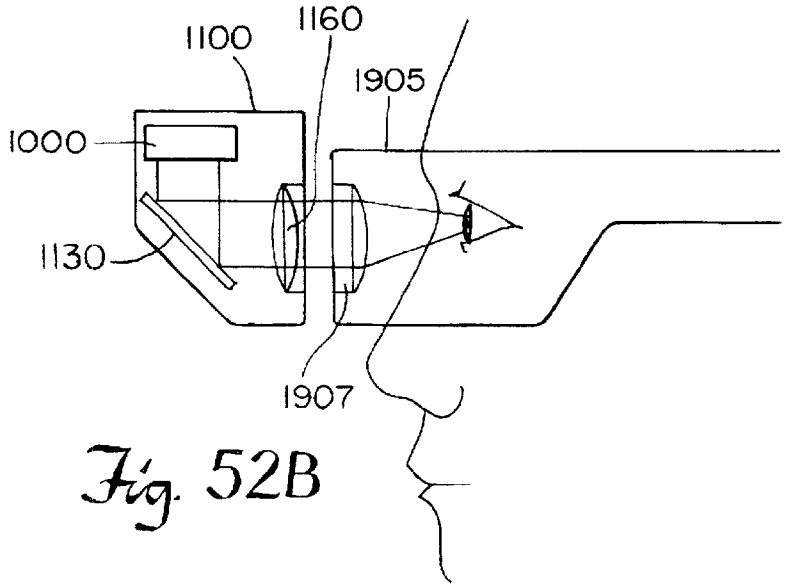

Fig. 52B

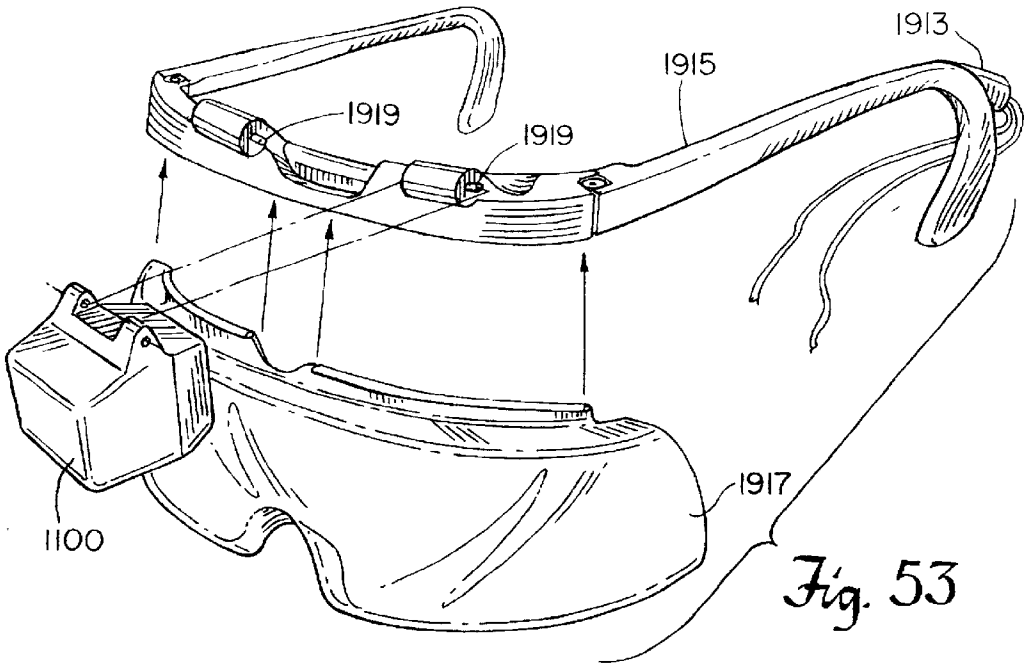

Fig. 53

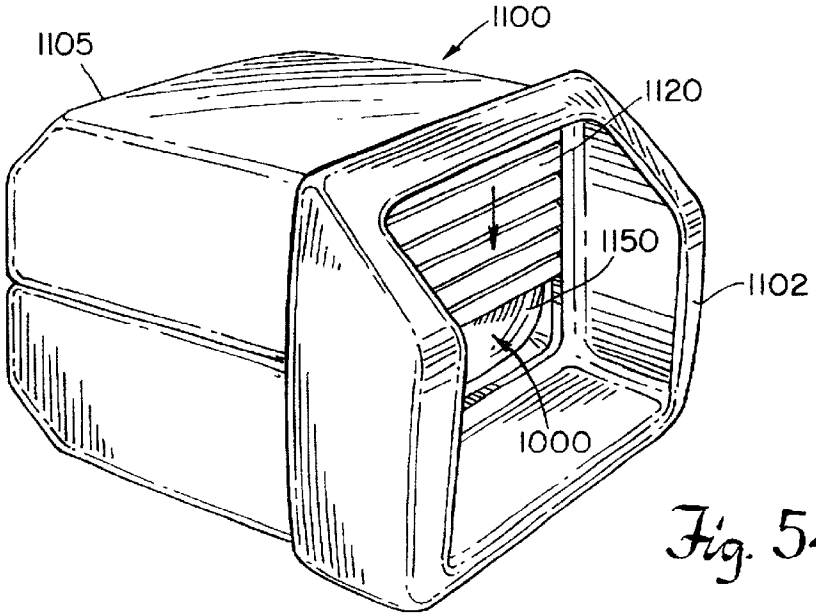

Fig. 54

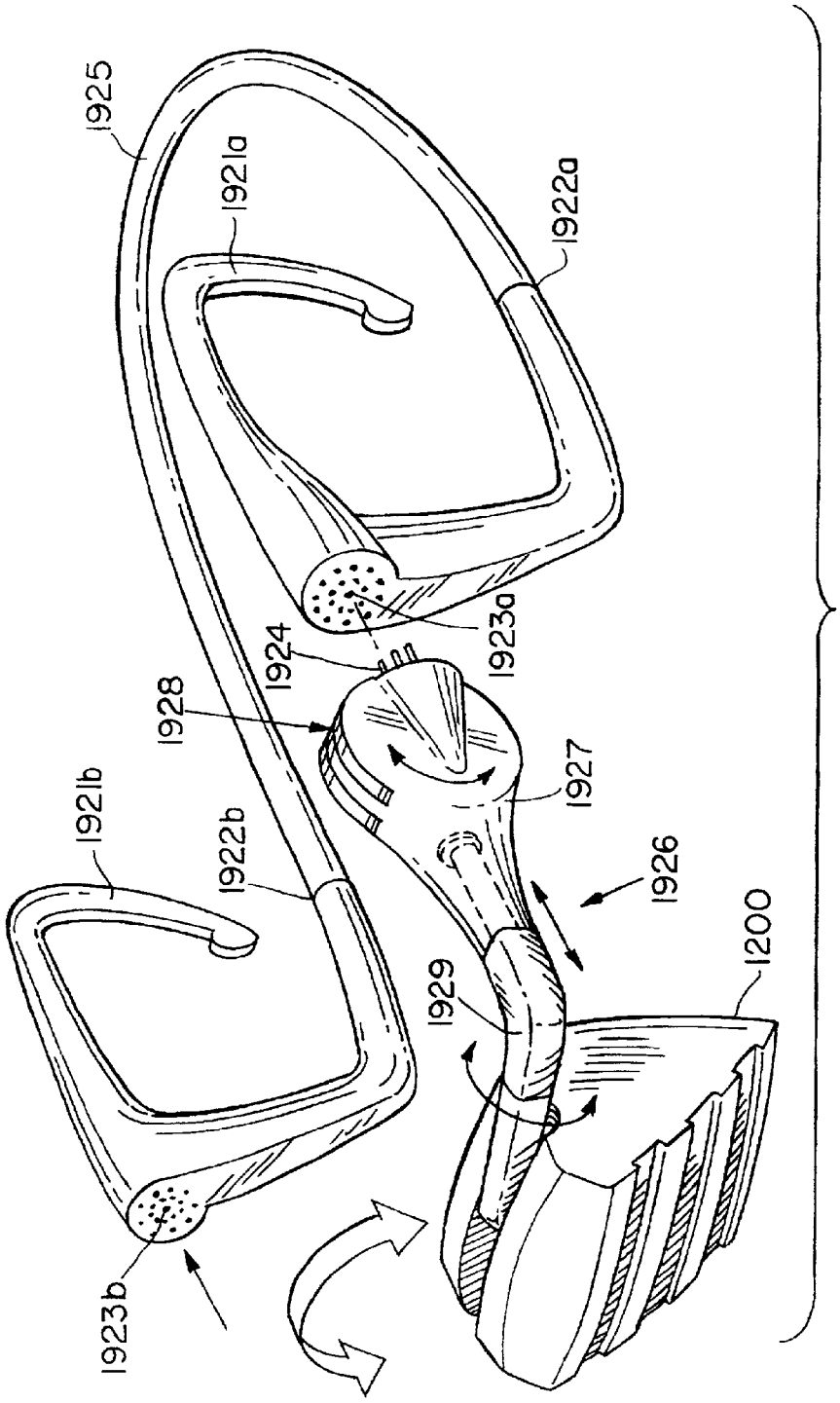
1925
1921a
1922a
1923a
1924
1928
1927
1926
1921b
1922b
1929
1200
1923b

Fig. 55

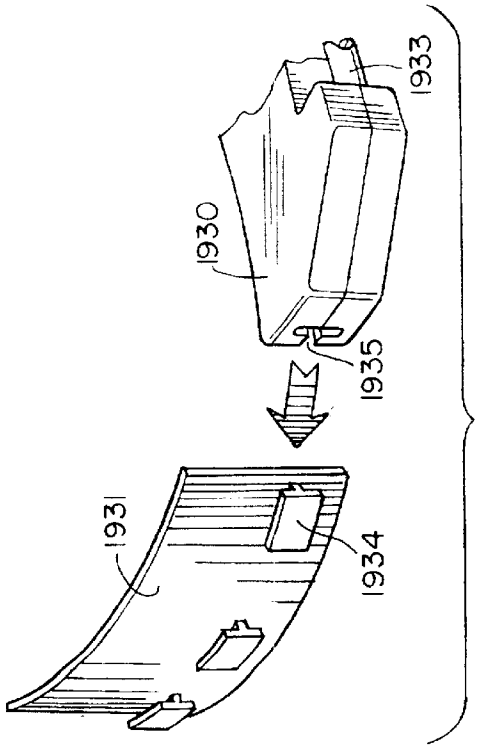

Fig. 56C

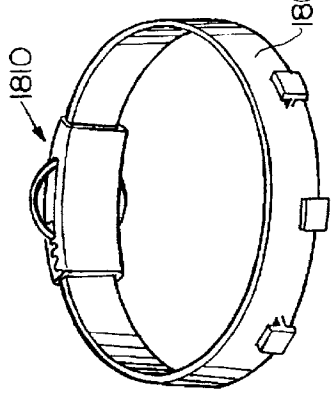

Fig. 56D

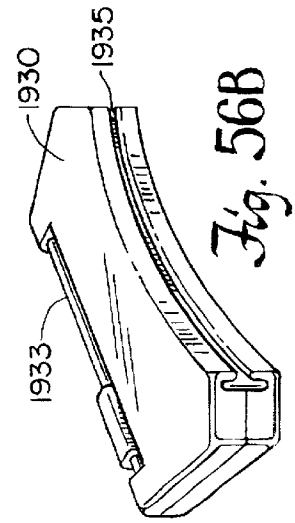

Fig. 56B

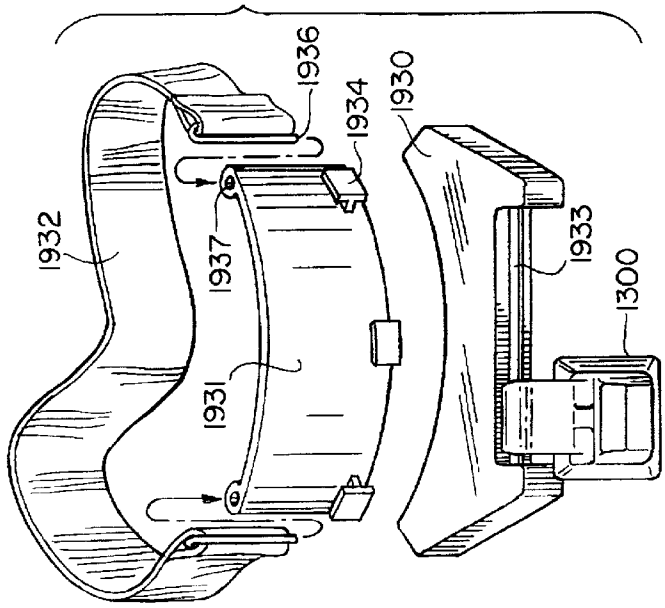

Fig. 56A

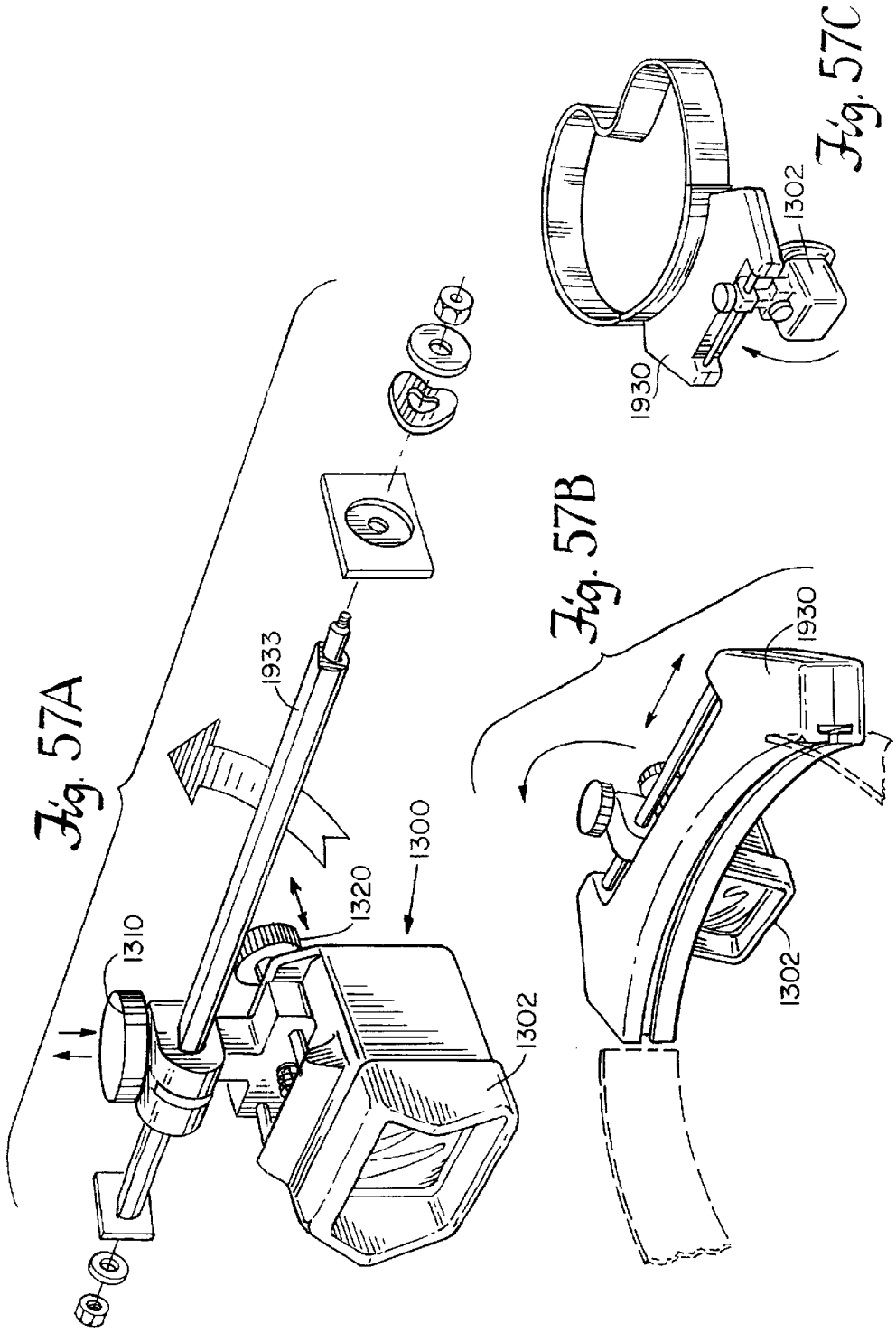
Fig. 57A
1310
1320
1300
1933
1302
Fig. 57B
1930
1302
Fig. 57C
1930
1302

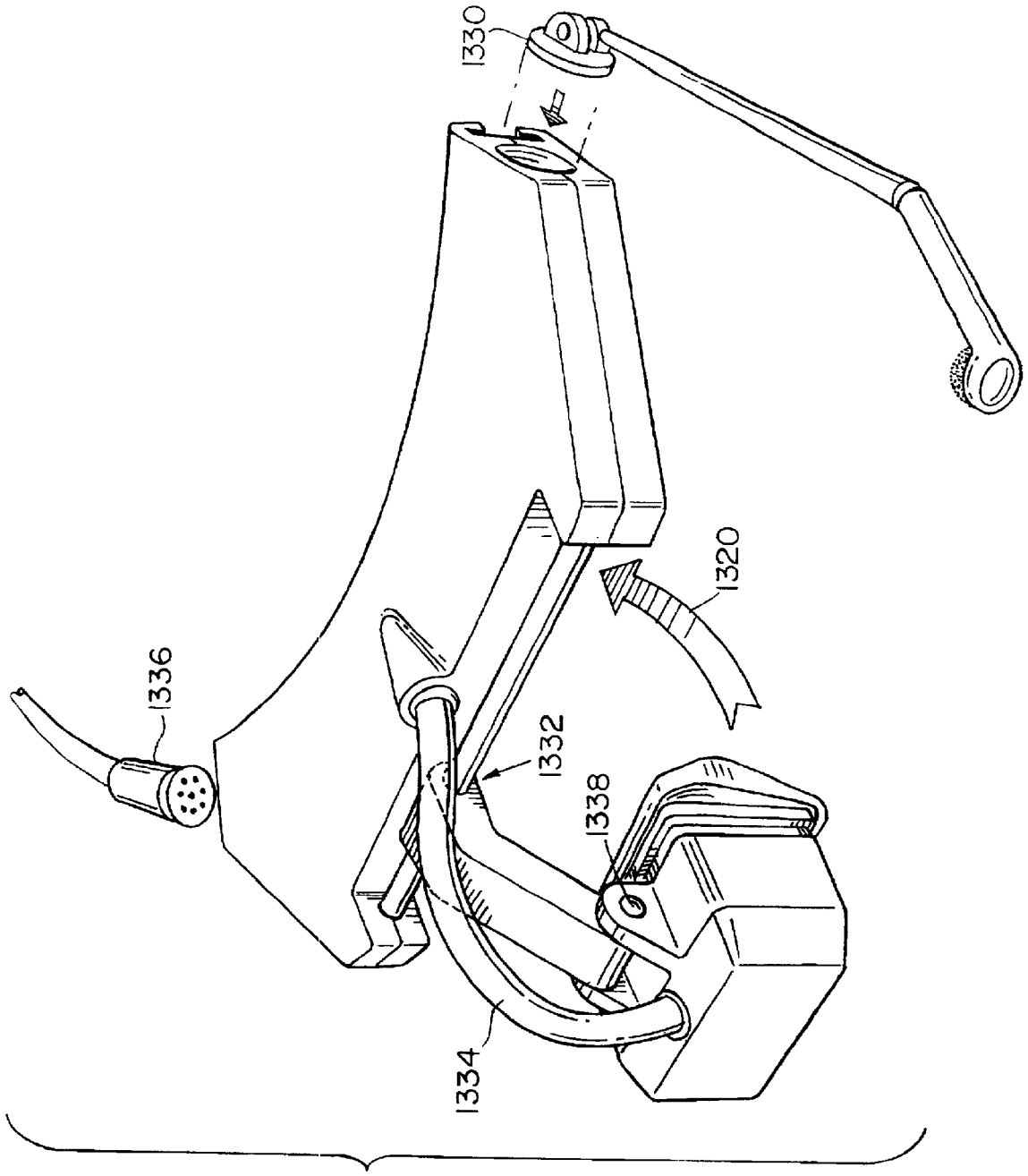

Fig. 57D

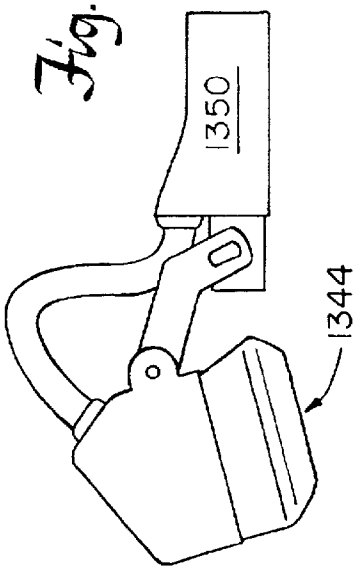

Fig. 57G

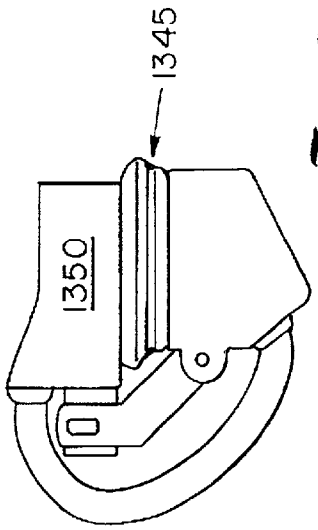

Fig. 57H

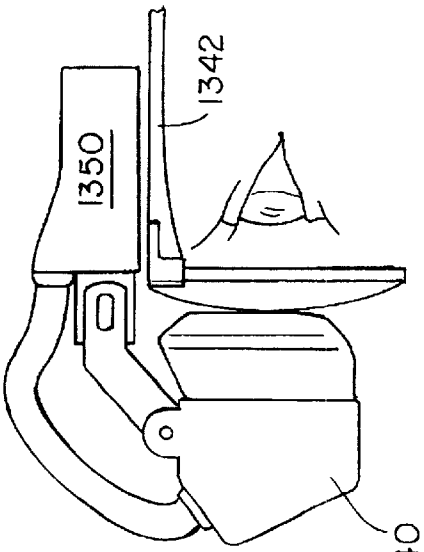

Fig. 57E

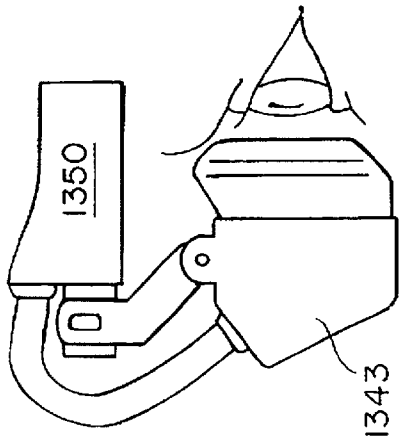

Fig. 57F

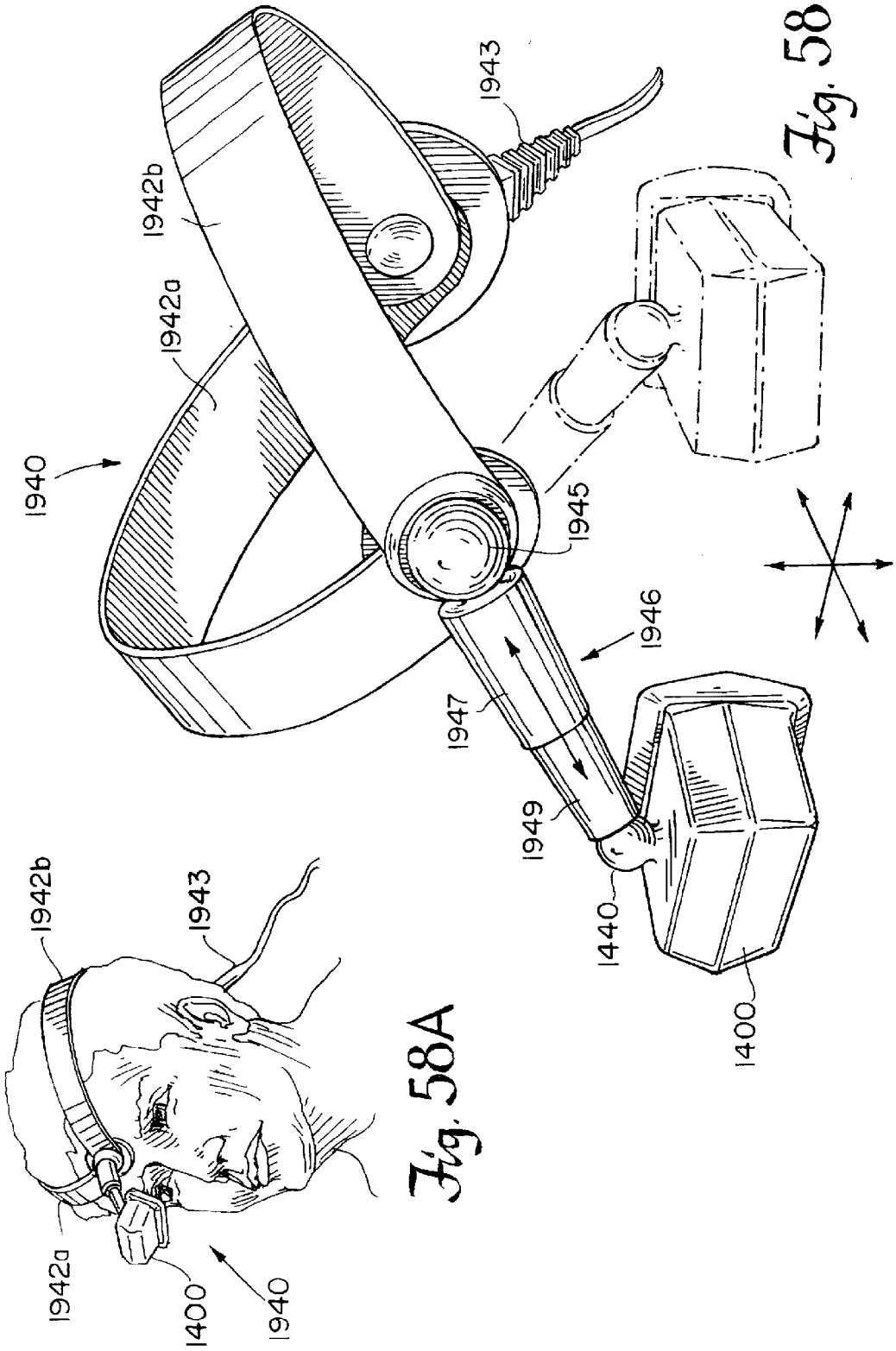

Fig. 58B

Fig. 58A

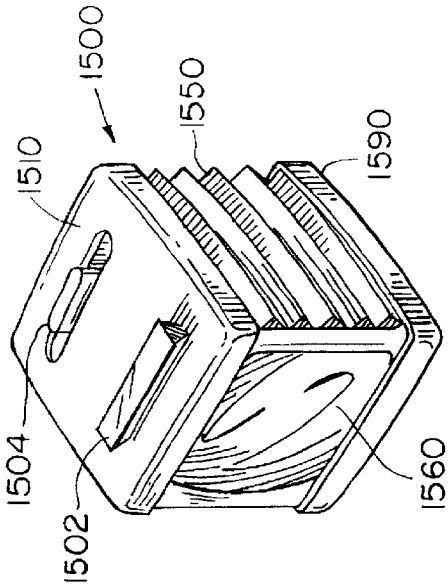

Fig. 59A

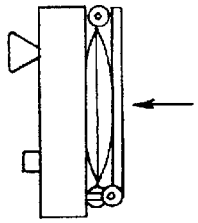

Fig. 59D

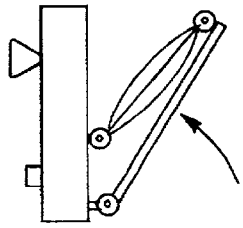

Fig. 59C

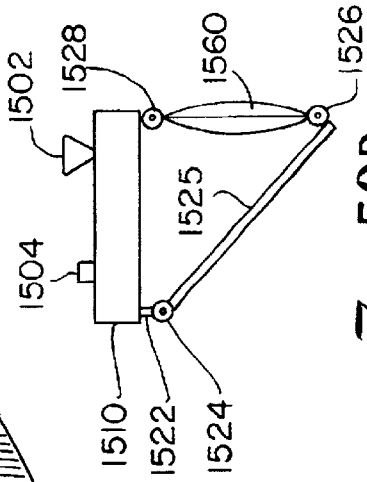

Fig. 59B

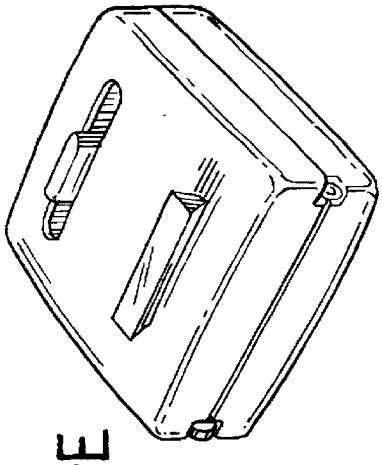

Fig. 59E

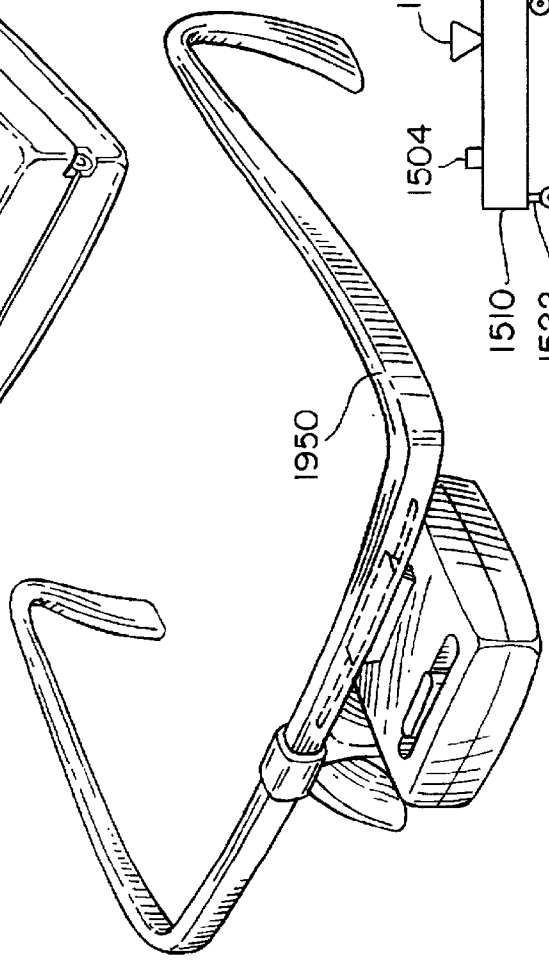

Fig. 59F

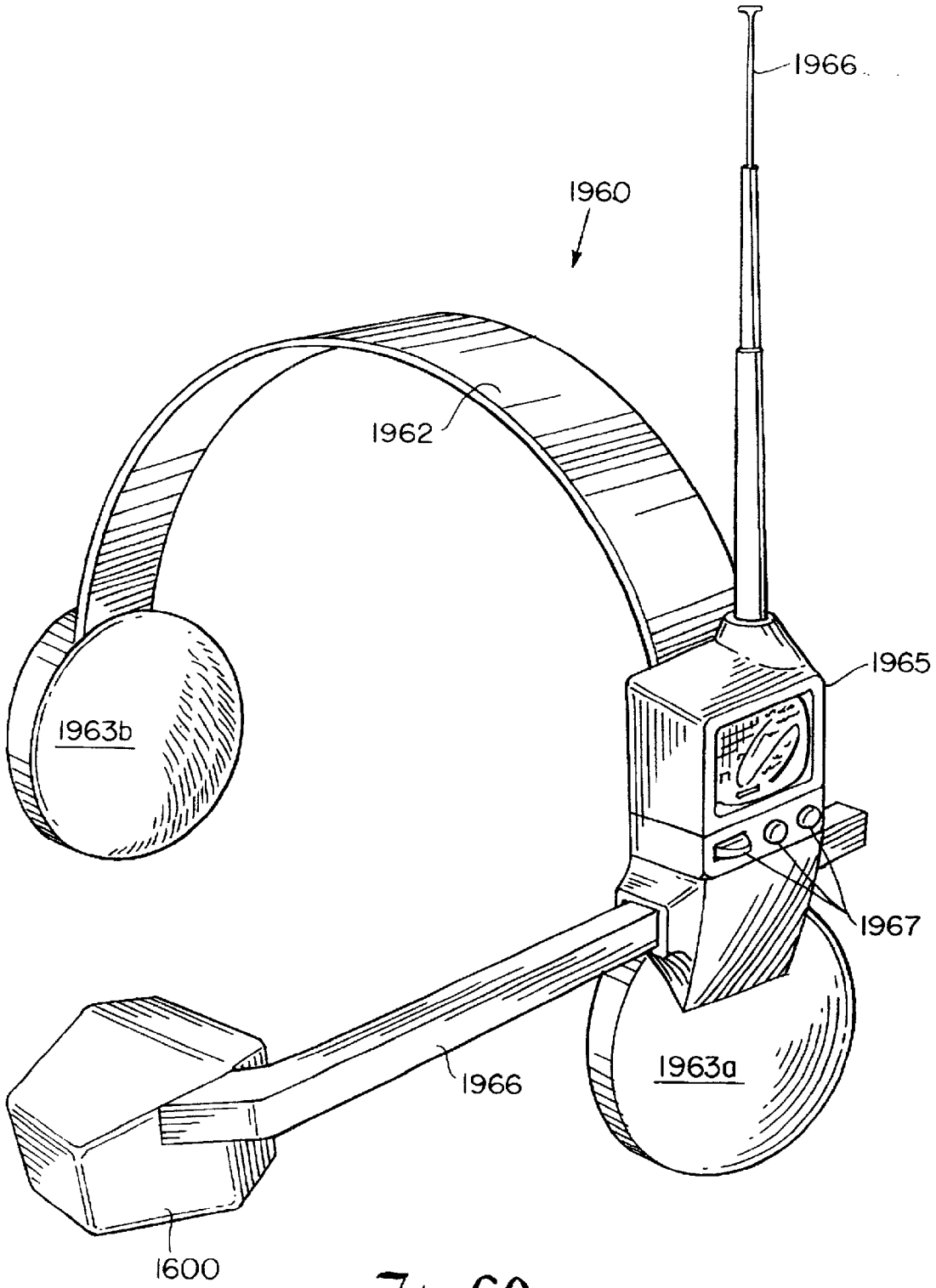

Fig. 60

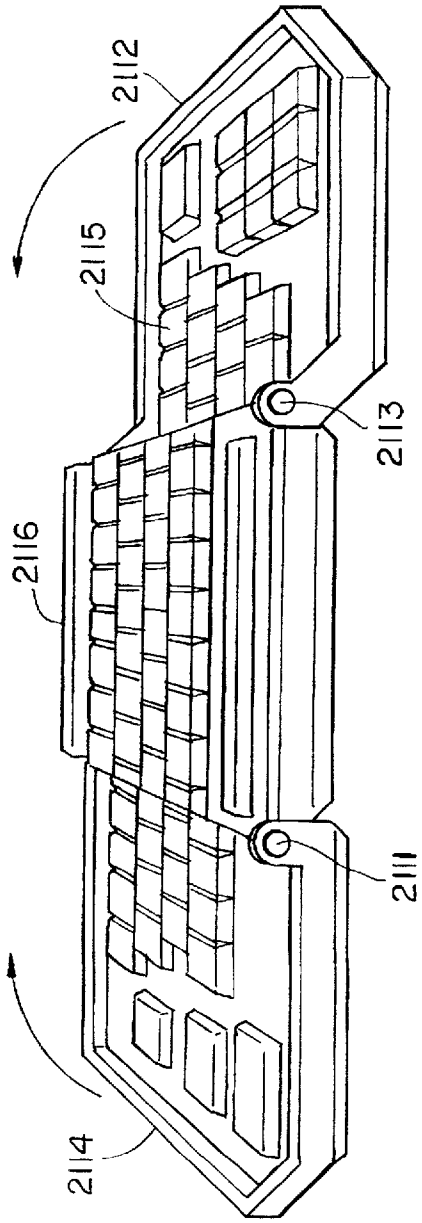

Fig. 61A

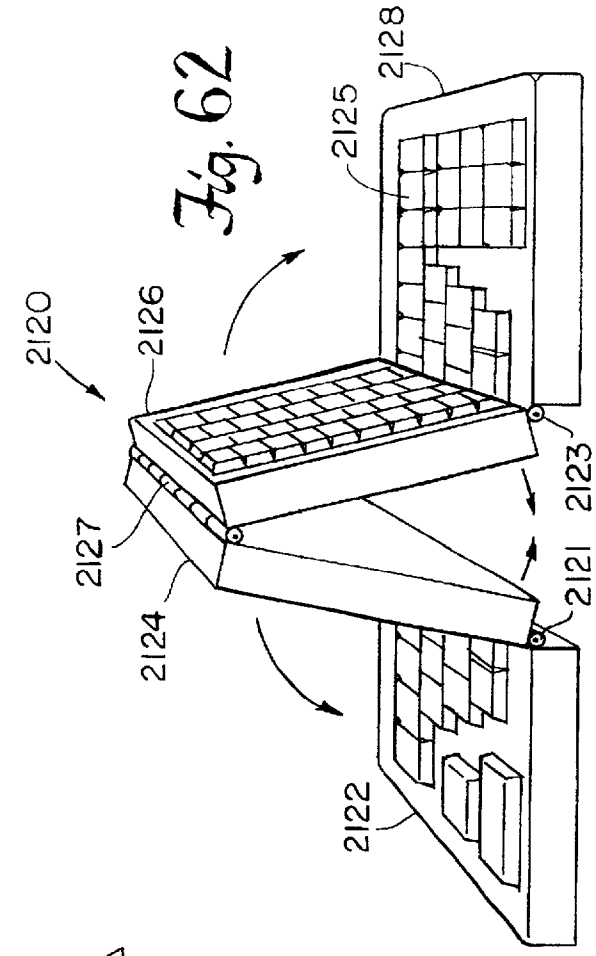

Fig. 62

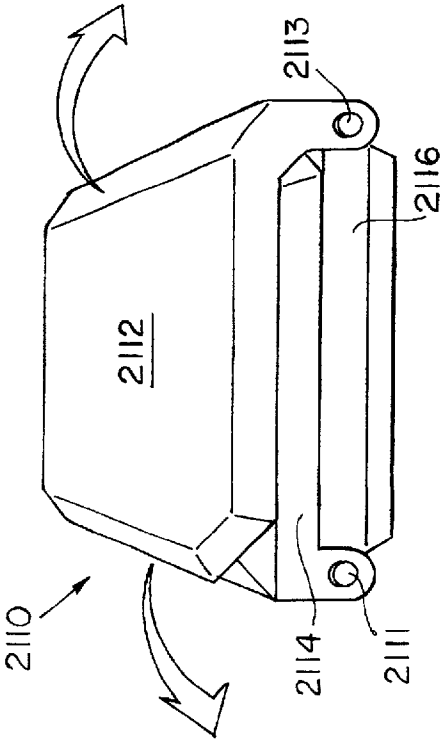

Fig. 61B

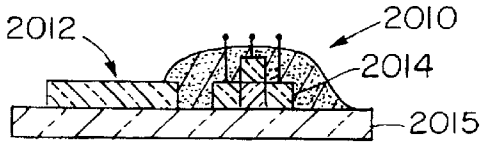

Fig. 63A

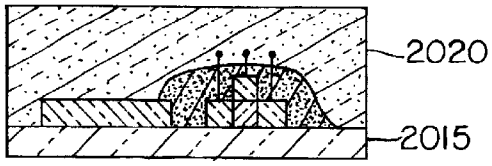

Fig. 63B

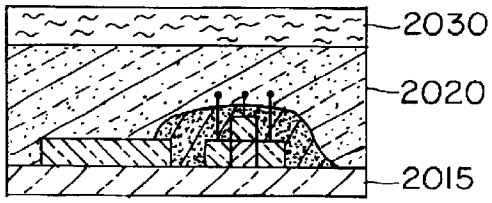

Fig. 63C

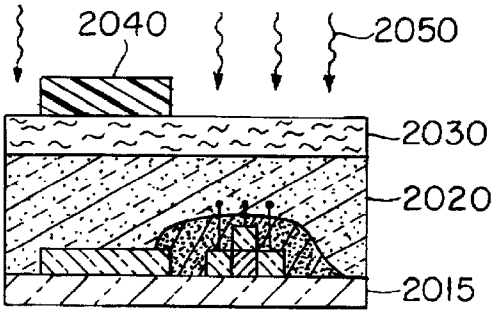

Fig. 63D

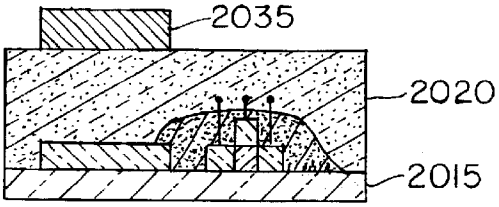

Fig. 63E

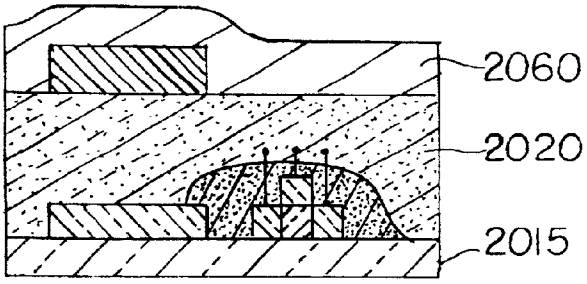

Fig. 63F

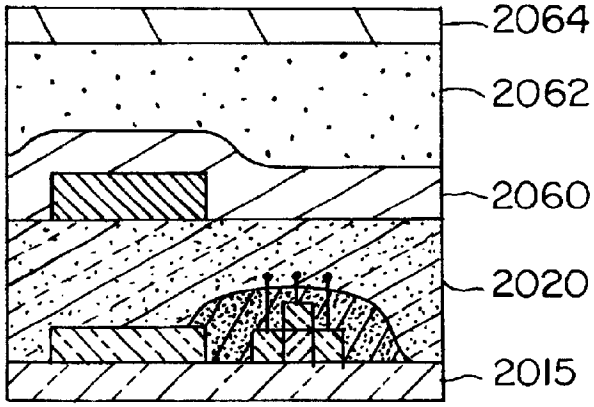

Fig. 63G

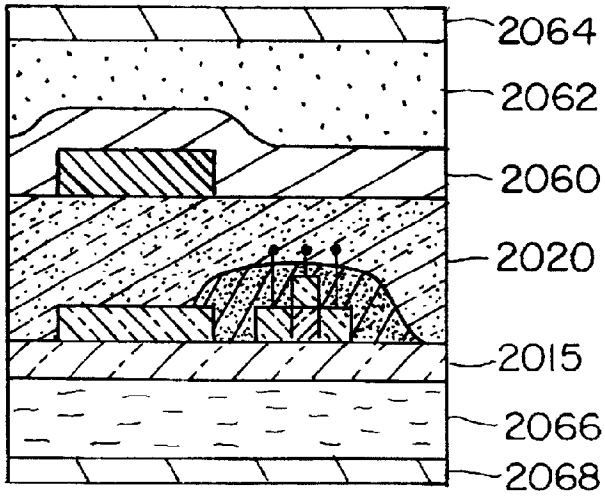

Fig. 63H

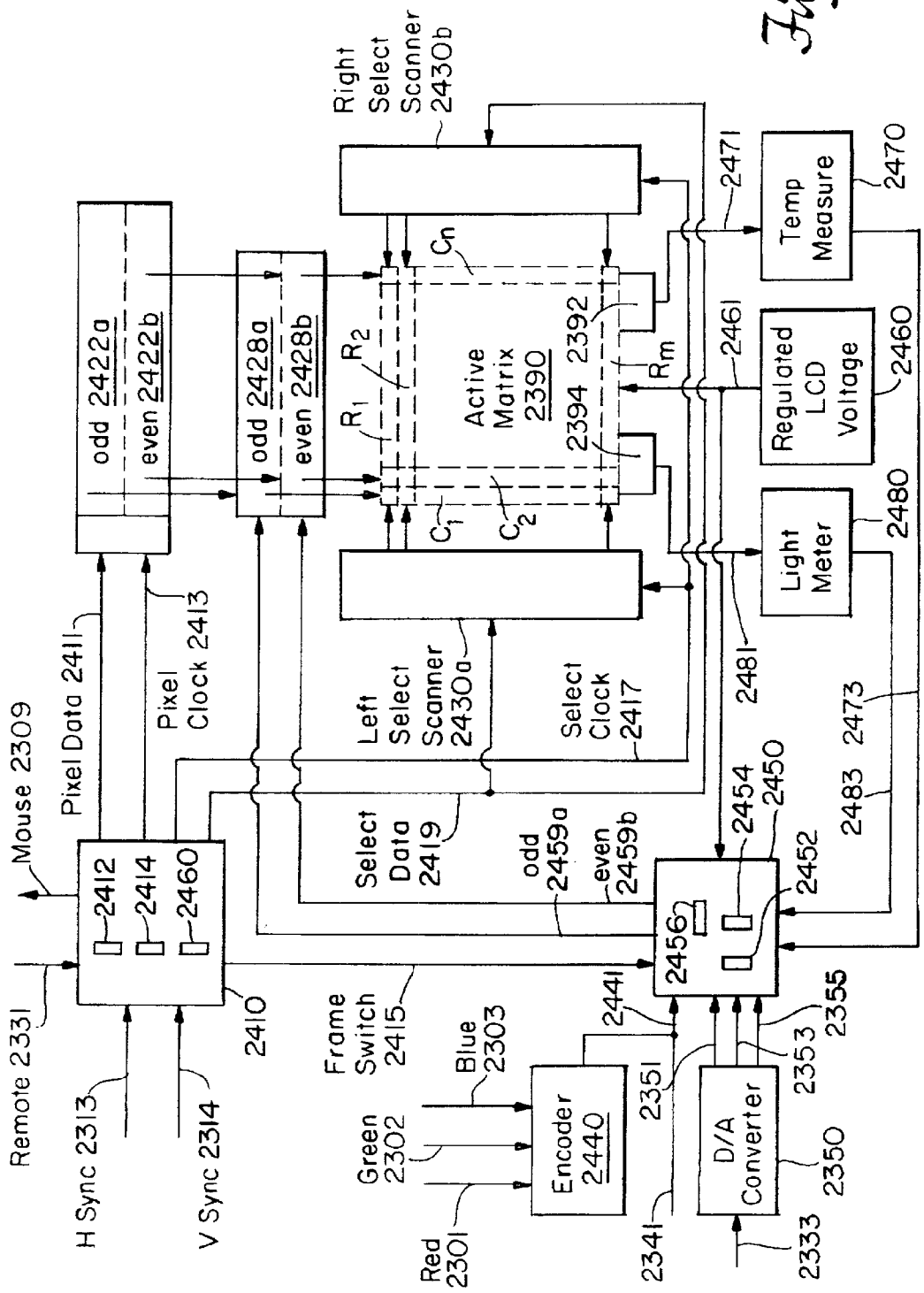
Right Select Scanner 2430b
odd 2422a
even 2422b
odd 2428a
even 2428b
Active Matrix 2390
Temp Measure
Regulated LCD Voltage
Light Meter
Left Select Scanner 2430a
Select Clock 2417
Select Data 2419
Pixel Data 2411
Pixel Clock 2413
Mouse 2309
Remote 2331
H Sync 2313
V Sync 2314
Frame Switch 2415
Blue 2303
Green 2302
Red 2301
Encoder 2440
D/A Converter
odd 2459a
even 2459b

Fig. 64

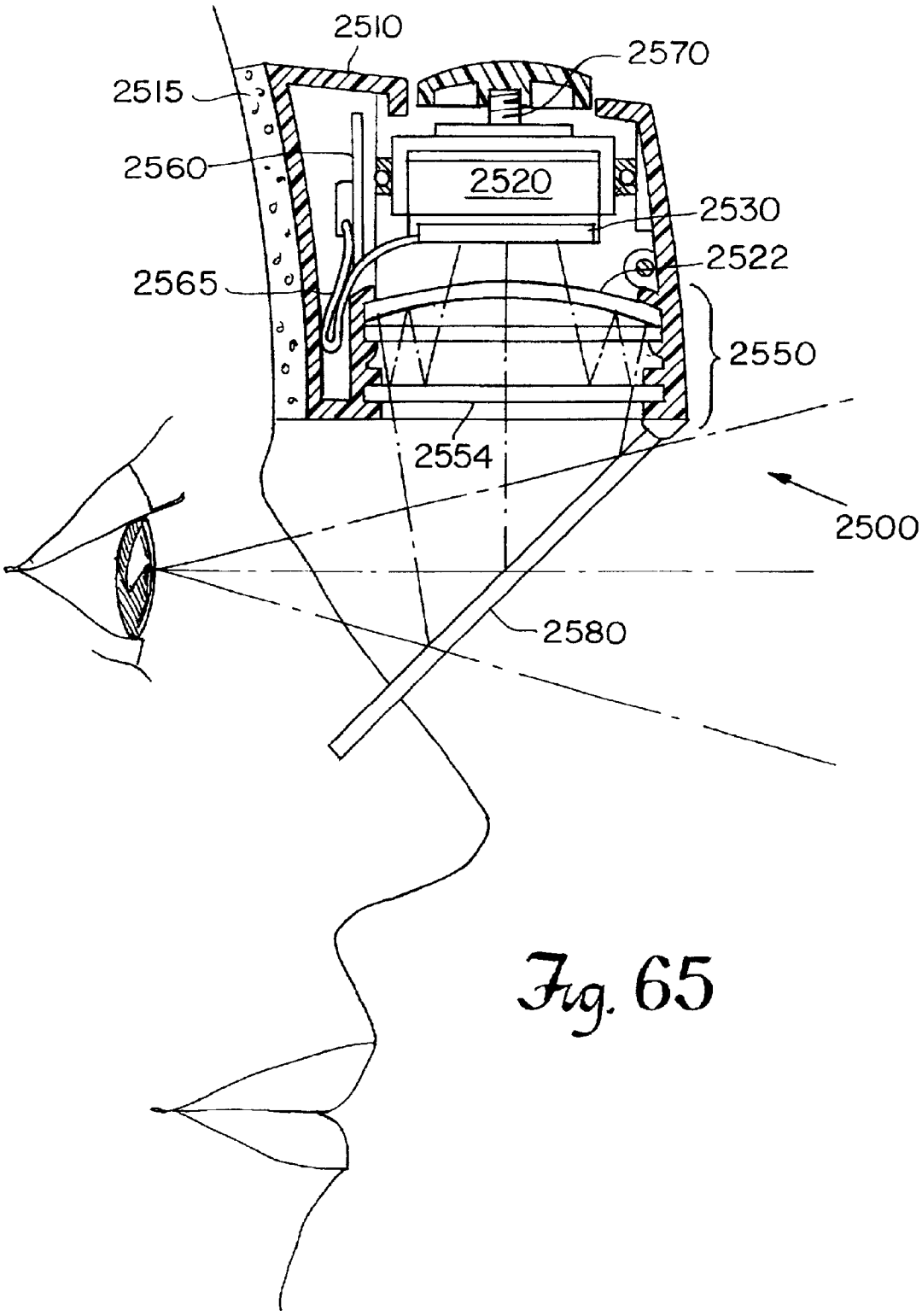

Fig. 65

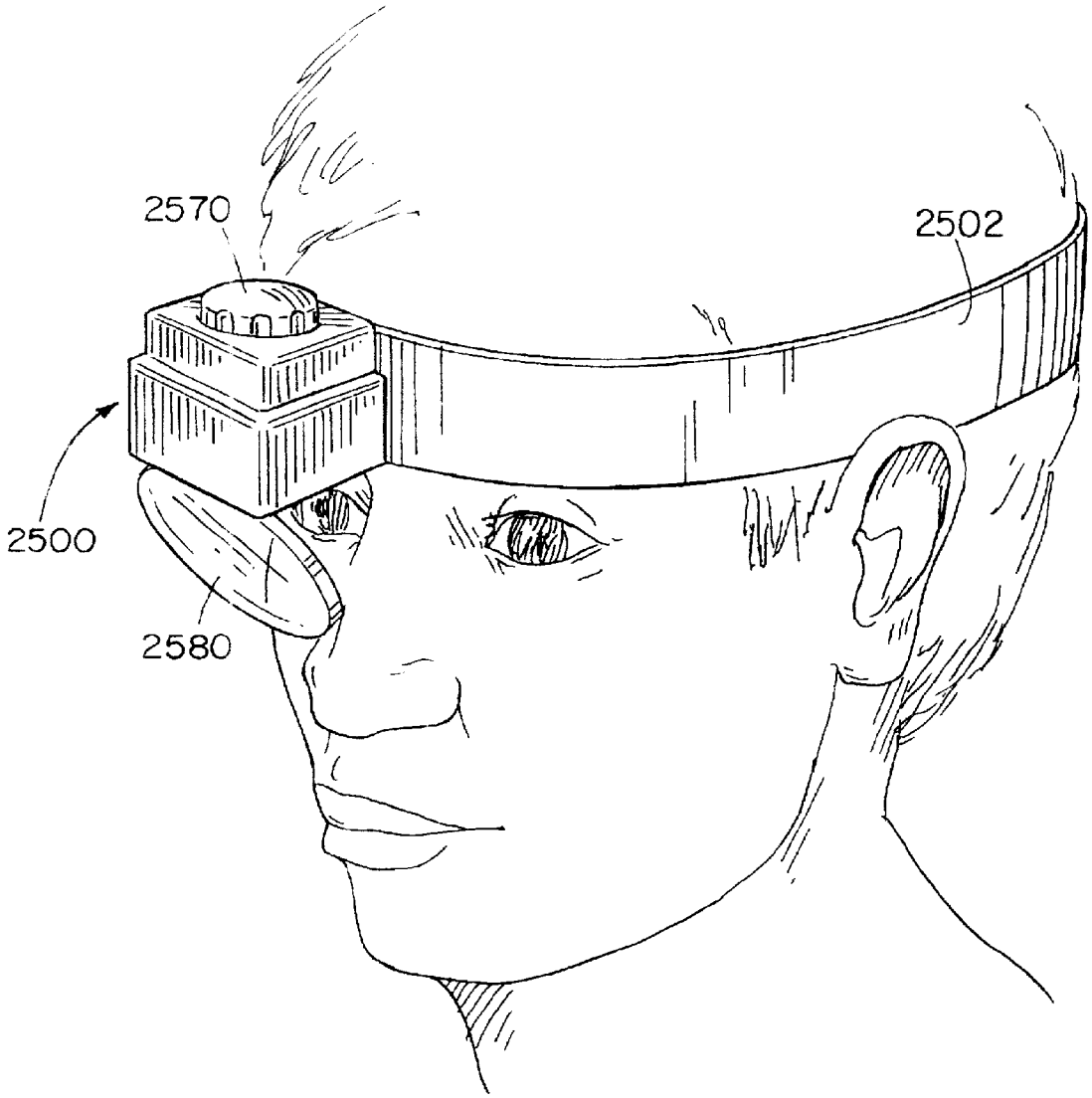

Fig. 66

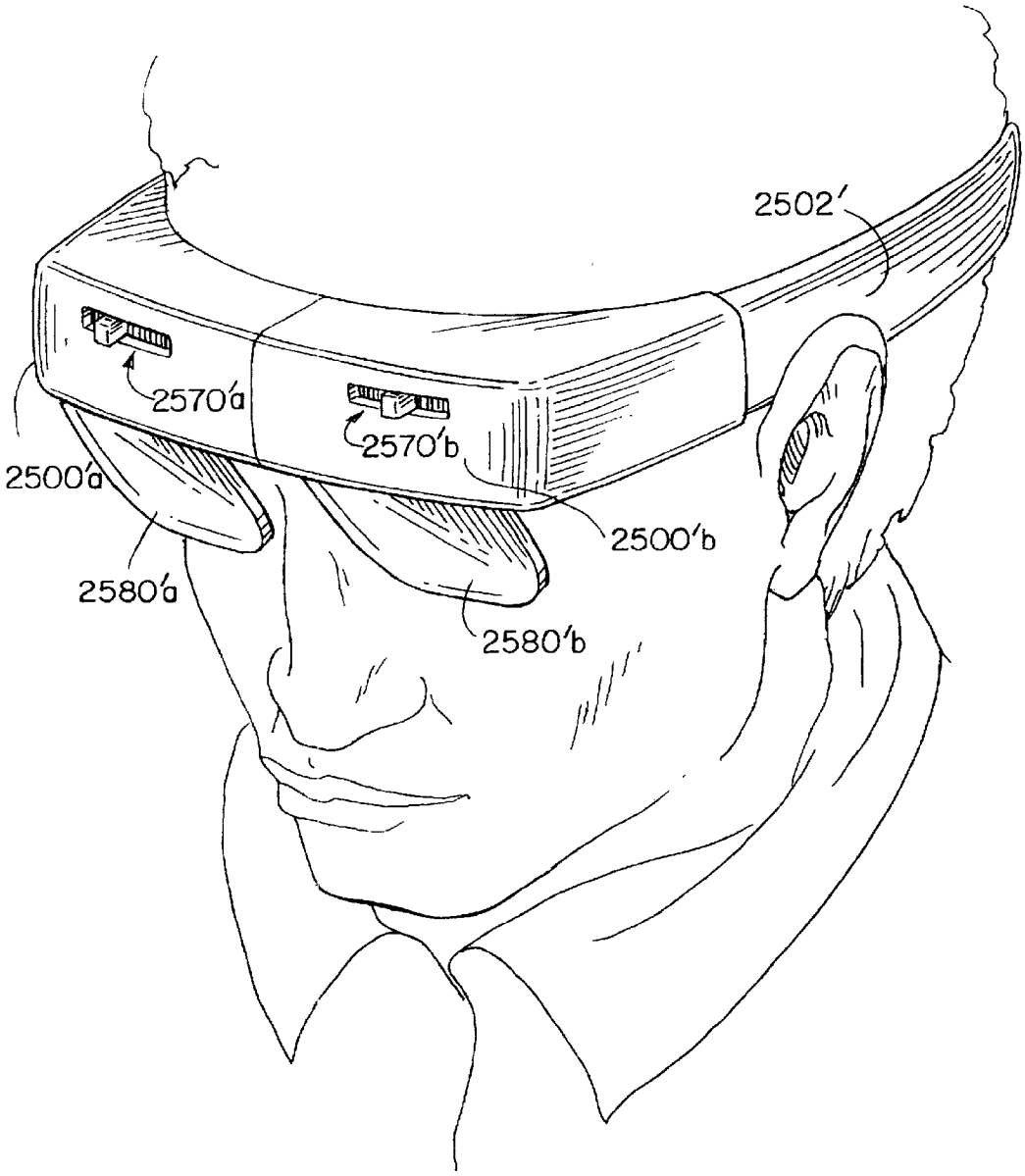

Fig. 67

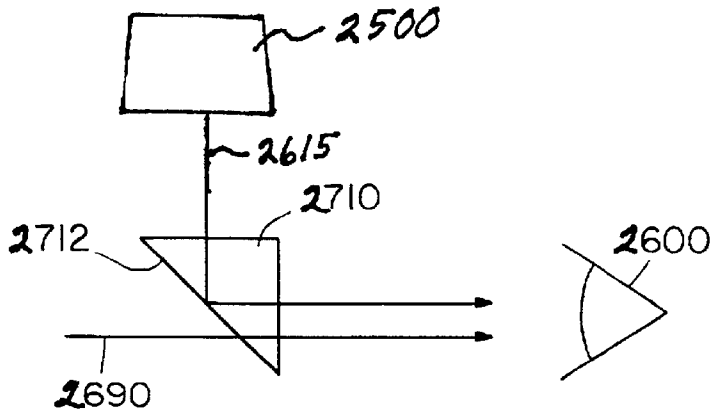

FIG. 68

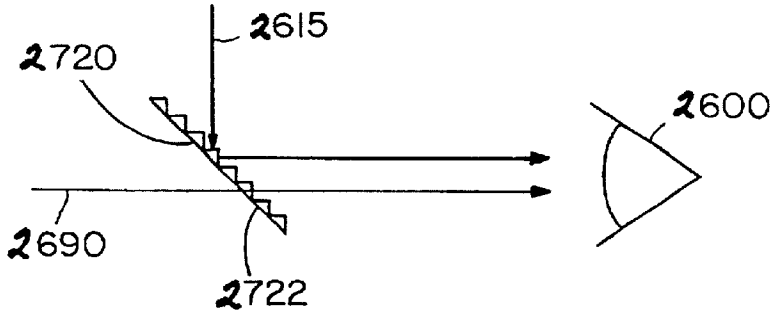

FIG. 69

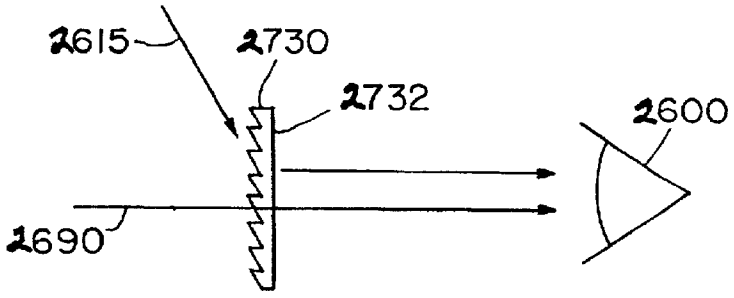

FIG. 70

HEAD-MOUNTED DISPLAY SYSTEM

RELATED APPLICATION

[0001] This is a Continuation-in-Part of U.S. Ser. No. 08/287,970, filed on Aug. 9, 1994, which is a Continuation-in-Part of U.S. Ser. No. 08/220,042, filed on Mar. 30, 1994 which is a Continuation-in-Part of U.S. Ser. No. 08/141,133, filed on Oct. 22, 1993; the teachings of which all being incorporated herein by reference in their entirety.

BACKGROUND OF THE INVENTION

[0002] Head mounted display systems have been developed for a number of different applications including use by aircraft pilots and for simulation such as virtual imaging. Head mounted displays are generally limited by their resolution and by their size and weight.

[0003] Existing displays have relatively low resolution, and because of the size and weight of available systems, these displays are often positioned at the relatively large distance from the eye. Of particular importance, is the desirability of keeping the center of gravity of the display from extending upward and forward from the center of gravity of the head and neck of the wearer, where it will place a large torque on the wearer's neck and may bump into other instruments during use.

[0004] There is a continuing need to present images to the wearer of a helmet mounted display in high-resolution format similar to that of a computer monitor. The display needs to be as non-intrusive as possible, leading to the need for lightweight and compact system. Existing head mounted displays have used analog cathode ray tube ("CRT") devices mounted above or to the side of the user's head which project an image onto a surface or visor mounted in front of the user's eyes. Often these displays utilize helmets which incorporate earphones into the helmet. Other head mounted display devices have contemplated the use of liquid crystal devices that could be mounted above or to the side of the user's head and employ reflective optics to direct an image within the field of view of the user.

SUMMARY OF THE INVENTION

[0005] The present invention relates generally to systems and methods for mounting display and electronic systems on the human body for numerous applications including commercial, industrial and entertainment purposes. Due to the development of small, light weight, high resolution matrix displays, the use of these systems for head mounted and body mounted applications is expected to increase. The use of transferred thin film techniques and/or thin film single crystal silicon material to produce small, high resolution active matrix electronic displays is highly suited for the manufacture of head or body mounted displays is described in U.S. Pat. Nos. 5,206,749 (issued Apr. 27, 1993), 5,228,325 (issued Nov. 2, 1993), and 5,300,788 (issued Apr. 5, 1994), the entire contents of these patents being incorporated herein by reference.

[0006] Depending on the particular application, it is desirable to use either monocular or binocular systems for head mounted displays. For monocular systems, preferred embodiments have a single display and associated optics in a housing that can be positioned at the center of the filed of view of either of the user's eyes and can be moved partially or completely out of the user's field of view. Both monocular and binocular systems can be used with any video source. A preferred embodiment of the monocular system can be mounted to a frame with a hinge so that it can rotate in a vertical plane to a position above the field of view of the user. The frame can be secured to a support that holds the display on the head of the user. The frame can also house the wiring harness for the display as well as other communications systems described hereinafter.

[0007] A particular embodiment, uses either of the monocular or binocular systems with a head or body mounted computer system and a user interface. The computer and associated electronic components used to load programs, load and store data and communicate or network with other systems by wire or wireless operation can be mounted on the head-piece, or in other embodiments, on the chest, back, arms or around the waist of the user. The user interface can be a standard (ISO) keyboard, a collapsible keyboard in standard or non-standard format, a voice activated system a pen, a joystick, a trackball, a touch pad, or a virtual keyboard using motion sensitive gloves, or other suitable means depending upon the particular embodiment and application.

[0008] In accordance with a preferred embodiment of a binocular head mounted display, the system can include a housing in which a pair of matrix display elements are secured. These display elements are of a sufficiently lightweight and compact nature that the housing can be mounted onto the head of a user with a pair of hinge mounted arms or support elements that can be rotated relative to the housing from a closed position to an open position. When in the open position the arms extend about the opposite side of the user's head and serve to position audio transducers mounted on the arms into proximity with the ears of the user. The arms can also be double hinged in which each arm is folded once about its mid-point and then rotated about the hinge on each side of the housing to assume the closed position.

[0009] System electronics and manually adjustable controls can be positioned within the housing or the rotating arms, or on bands extending above or behind the head of the user. Positioning of the electronics and controls within the arms or bands permits a more desirable distribution of weight evenly about the sides or top of the user's head.

[0010] The inter-pupillary distance between the two displays can be adjusted such as by the use of a gear driven cam assembly mounted within the housing. Centering of both monocular and binocular displays within the field of view of one or both eyes can thus be accomplished manually, or alternatively by motorized gears or cams. Motors can also be incorporated into the support structure to move the display into, and out of, the user's field of view.

[0011] The direct view display can be a transmission type display with the light source directly adjacent the light valve active matrix and mounted within the display device. The transmission type display can, in a preferred embodiment, also receive light directly from the user's environment so that the display overlays an image over the users existing field of view.

[0012] Alternatively, the display can be an emission type device such as an active matrix electroluminescent display

or an active matrix of light emitting diodes (LEDs), or transmissive passive matrix display or a reflective display.

[0013] In various alternative embodiments, a head mounted display can be provided for use with a headband where a molded plastic visor serves as a frame for mounting the electronic display and houses the display wiring harness. An audio system can be mounted on various types of head and body mounted displays described herein, including the headband, the monocular and binocular systems. The audio system can be linked to a computer system, with a network, with connection by wire, fiberoptic or wireless systems, or to other audio sources including radio or television transmitters.

[0014] A preferred embodiment provides protective headgear such as safety glasses, hardhats and helmets for a number of commercial and industrial applications. For embodiments including hardhats and helmets, the system includes a rigid protective headpieces covering the head of the user to prevent injury from falling objects. The protective headgear is dimensioned to work in combination with an electronic display mounted on a frame which can be secured to the user's head using several alternative devices. The frame can be mounted to the rigid headpiece by clipping or otherwise securing the frame to the headpiece visor or a receptacle on that portion of the headpiece adjacent one ear of the user. Alternatively, the frame can be mounted on or within the helmet. The frame can include a first track to permit the user to move the display from a retracted position to a viewing position within the field of view of the user. This system can be a monocular system or a binocular system using two displays. The monocular system can be placed on a second horizontal track so that the user can center the display in front of either eye.

[0015] In other alternative embodiments, the protective headgear can include transparent safety glasses or visor in front of the user's eyes. When used with safety glasses or other protective components, the display can be secured with a breakaway mounting device so that impacts on the display above a threshold force level with cause the display to detach from the glasses, visor or frame on which the display is mounted.

[0016] The displays used herein can be monochrome or color. Color or monochrome active matrix displays having at least 300,000 pixels and preferably over 1,000,000 pixels can be fabricated using methods described in U.S. patent application Ser. No. 07/944,207 filed Sep. 11, 1992, the teachings of which are incorporated herein by reference.

BRIEF DESCRIPTION OF THE DRAWINGS

[0017] The above and other features of the invention, including various novel details of construction and combinations of parts, will now be more particularly described with reference to the accompanying drawings and pointed out in the claims. It will be understood that the particular head and/or body mounted display systems embodying the invention is shown by way of illustration only and not as a limitation of the invention. The principles and features of this invention may be employed in varied and numerous embodiments without departing from the scope of the invention.

[0018] **FIG. 1** is a rear perspective view of a preferred embodiment of the invention.

[0019] **FIG. 2** is a perspective view of a preferred embodiment of a wiring harness.

[0020] **FIG. 3** is a top plan view of the preferred embodiment of **FIG. 1** showing the placement of the wiring harness of **FIG. 2**.

[0021] **FIG. 4** is an exploded view of an optical assembly for use in a transmissive display system.

[0022] **FIG. 5** is an exploded view of a preferred embodiment of an optical assembly for use in an emissive display system.

[0023] **FIG. 6** is a top plan view showing the embodiment of **FIG. 1** in a stowed position.

[0024] **FIG. 7** is an exploded perspective view of a preferred embodiment of cam assembly for the pivot point **39** of **FIG. 6**.

[0025] FIGS. **8A-8B** are partial perspective views of another preferred embodiment for storing the stems **30** of **FIG. 1**.

[0026] **FIG. 9** is a perspective view of an alternative embodiment of the invention.

[0027] **FIG. 10** is a front view of an alternative embodiment of the invention.

[0028] **FIG. 11** is a top view of an alternative embodiment of the invention.

[0029] **FIG. 12** is a side view of an alternative embodiment of the invention.

[0030] **FIG. 13** is a back view of an alternative embodiment of the invention.

[0031] **FIG. 14** is a bottom view of an alternative embodiment of the invention.

[0032] **FIG. 15** is a top perspective view of the alternative embodiment in a closed position.

[0033] **FIG. 16** is a bottom perspective view of the closed position.

[0034] FIGS. **17A-17B** are detailed views of the sliding assembly.

[0035] FIGS. **18A-18B** are further detailed views of the spool assembly and cable management system.

[0036] **FIG. 19** is a perspective view of an optics module with portions of the housing broken away.

[0037] **FIG. 20** is a back-side view of two modules mounted on a rail assembly.

[0038] **FIG. 21** is a perspective view of the optics housing.

[0039] **FIG. 22** is a cross-sectional side view of the optics.

[0040] FIGS. **23A-23B** are schematic diagrams illustrating the full down and full up position of the focus adjusting system of **FIG. 19**.

[0041] **FIG. 24** is a perspective view of the focus slide and backlight housing of **FIG. 19**.

[0042] **FIG. 25** is an alternative embodiment of the optical system for a high resolution display.

[0043] **FIG. 26** is an exploded view of the eye-piece display and optics of a preferred embodiment of the invention.

[0044] **FIG. 27** is a perspective view of a collapsible keyboard in accordance with the invention.

[0045] **FIG. 28** is a perspective view of a collapsed keyboard and head mounted display device.

[0046] FIGS. **29A-29B** illustrate another preferred embodiment of the collapsible keyboard and head mounted display system.

[0047] FIGS. **30A-30C** illustrate another preferred embodiment of a collapsible keyboard and head mounted display system in accordance with the invention.

[0048] **FIG. 31A** is a perspective view of a head-mounted computer with a motorized display arm shown detached.

[0049] **FIG. 31B** is an exploded perspective view of the head-mounted computer of **FIG. 31A**.

[0050] **FIG. 32A** is a perspective view of a head-mounted computer fitted to a wearer.

[0051] **FIG. 32B** is a perspective view of a preferred display arm, such as shown in **FIG. 32A**.

[0052] **FIG. 33** is a perspective view of another preferred head-mounted computer.

[0053] **FIG. 34A-34D** are views of another head-mounted computer in accordance with the present invention.

[0054] **FIG. 35** is a functional block diagram of a preferred head-mounted computer architecture according to the invention.

[0055] **FIG. 36** is a functional block diagram of a general purpose head-mounted personal computer.

[0056] **FIG. 37** is a functional block diagram for a personal firefighter computing system.

[0057] **FIG. 38** is a functional block diagram of a head-mounted police computer according to the invention.

[0058] **FIG. 39** is a functional block diagram of a head-mounted computer for use by chemical factory workers.

[0059] **FIG. 40** is a functional block diagram of a head-mounted nuclear plant computer.

[0060] **FIG. 41** is a functional block diagram of a head-mounted mining computer.

[0061] **FIG. 42** is a functional block diagram of a head-mounted military computer.

[0062] **FIG. 43** is a functional block diagram on a head-mounted space exploration computer.

[0063] **FIG. 44** is a functional block diagram of a general purpose head-mounted survival computer.

[0064] **FIG. 45** is a functional block diagram of a head-mounted maintenance computer.

[0065] FIGS. **46A-46E** are views of a protective head-mounted maintenance computer of **FIG. 45** worn by a maintenance worker.

[0066] FIGS. **47A-47D** illustrate views of a preferred embodiment of a projection type display.

[0067] **FIG. 48** is a perspective view of another preferred embodiment of the invention.

[0068] **FIG. 49** is a perspective view of a back-mounted computer and a head-mounted display.

[0069] **FIG. 50** is a perspective view of a chest-mounted computer according to a preferred embodiment of the invention.

[0070] **FIG. 51** is a perspective view of a wrist-mounted computer and display apparatus.

[0071] **FIG. 52A** is a perspective view of a person wearing magnifying glasses equipped with a display.

[0072] **FIG. 52B** is a schematic diagram of the optics of **FIG. 52A**.

[0073] **FIG. 53** is an exploded perspective view of a display mounted to a pair of safety glasses.

[0074] **FIG. 54** is a perspective view of a display for industrial applications.

[0075] **FIG. 55** is a perspective view of a monocular display in accordance with the invention.

[0076] FIGS. **56A-56D** are perspective views of another head-mounted display apparatus according to the invention.

[0077] FIGS. **57A-57H** illustrate perspective view of a particular visor mounted preferred display.

[0078] **FIG. 58A** is a perspective view of a wearer equipped with a preferred embodiment of a head-mounted display.

[0079] **FIG. 58B** is a perspective view of the head-mounted display of **FIG. 58A**.

[0080] FIGS. **59A-59F** are perspective views of a collapsible display according to a preferred embodiment of the invention.

[0081] **FIG. 60** is a perspective view of a head-mounted display integrated with a television tuner.

[0082] FIGS. **61A-61B** are perspective views of another collapsible keyboard.

[0083] **FIG. 62** is a perspective view of yet another collapsible keyboard.

[0084] FIGS. **63A-63H** are schematic diagrams of a preferred process flow sequence for fabrication of a color filter.

[0085] **FIG. 64** is a schematic diagram of a preferred control circuit.

[0086] **FIG. 65** is a schematic diagram of a projection head-mounted display shown partially in cross section.

[0087] **FIG. 66** is a perspective view of the projection display unit of **FIG. 65** worn as a monocle by a user.

[0088] **FIG. 67** is a perspective view of a binocular projection head-mounted display.

[0089] **FIG. 68** is a cross-sectional view of an image reflective system for a head-mounted display.

[0090] **FIG. 69** is another preferred embodiment for an image reflective system for a head-mounted display.

[0091] **FIG. 70** is another preferred embodiment for an image reflective system for a head-mounted display.

DETAILED DESCRIPTION OF PREFERRED EMBODIMENTS OF THE INVENTION

[0092] **FIG. 1** is a rear perspective view of a preferred embodiment of a head mounted display **1**. The head mounted display **1** is constructed of plastic or some other light-weight housing material and is adapted to be worn by a user to view video images via an optical assembly **100**. The head mounted display exploits electronic digital imaging to form video images on a pair of light valve display panels, one of which is viewed through the user's left eye and the other of which is viewed through the user's right eye. Related discussions of head mounted display devices are provided in U.S. patent application Ser. No. 07/971,352, filed Nov. 4, 1992 and International Patent Publication WO 93/18428, filed Mar. 12, 1992, the teachings of which are both incorporated herein by reference.

[0093] The images are provided by a remote video source **2**, which can be a camera, a computer, a receiver, a video cassette player, or any device that can transmit a video signal. The video source **2** may generate of video signal from data received over a link **9**, such as fiber optic cable. In addition, supply voltage is provided to the head mounted display **1** from a power supply **5**, which can provide the required supply voltage through the video source **2**. The video source **2** can also provide an audio signal. In a particular preferred embodiment of the invention, the video source **2** and the power supply **5** are physically connected to the head mounted display **1** using a connector **3**.

[0094] It should be understood that the head mounted display **1** can be self-contained such that no physical connection to the remote video source **2** or power supply **5** is required. For example, the head mounted display **1** can contain a receiver to receive transmitted video information and translate that received video information to control signals. Such an embodiment is particularly useful for receiving an over-the-air television broadcast. Similarly, the power supply for the head mounted display **1** can be provided by batteries or another power source (e.g., solar cells) that are integrated into the head mounted display **1**.

[0095] The head mounted display **1** has a central housing body **12** that is formed from a front housing section **10** and a back housing section **20**. The front section **10** is preferably formed from an opaque material such as plastic to block external light **99** from the user's eye's. The rear section **20** is also formed from an opaque material but is adapted to permit the user to adjust the optical assembly **100**. The front section **10** is used to mount the optical assembly **100** (**FIG. 3**). In addition to the optical assembly **100**, the user can also adjust a nose bridge assembly **24**. The nose bridge assembly **24** can be positioned between an extended position (as illustrated) and a retracted position using an actuating button **25**. The user can select a position from a discrete number of detents. In a preferred embodiment of the invention, the actuating button **25** is fastened to one end of a member that slides within a channel of a support member **15**. The opposite end of the member is fastened to the nose bridge assembly **24**. When in a selected position, the button is registered to a respective detent. The actuating button **25** is pushed to release the button **25** from the detent so that the nose bridge **24** is retracted.

[0096] Attached to each side of the head mounted display body **12** is a stem **30** through a respective forward hinge **31**. Each stem contains a forward stem section **32**, which is coupled to the forward hinge **31** at the proximal end. In a particular preferred embodiment, the forward stem section **32** contains a rear hinge **33** at the distal end and an earphone storage compartment **37** into which earphones **40** are stowed when the stems are folded.

[0097] Rearward stem sections **34** are coupled to the forward stem section **32** joints **33** at their proximal ends. The rearward stem sections **34** are adapted to supply earphones for use by the user. The earphones **40** pivot down from a horizontally aligned position for use by the user. When stowed, the earphones **40** are returned to a horizontally aligned position for storage in the earphone storage compartment **37** of the forward stem section **32**. The earphones also slide forward and rearward for adjustment by the user. The rear stem sections **34** also contain control knobs **36**R, **36**L (see also **FIG. 2**) for adjusting the audio and video features during the operation of the head mounted display **1**. The control knobs **36**R, **36**L are thus coupled to electronic circuitry, which is also stored within the stem sections **30**. In a particular preferred embodiment of the invention, the right rear stem section **34**R contains a volume control **36**R and the left rear stem section **34**L contains a contrast control **36**L. Also in a particular preferred embodiment of the invention, the left rear stem section **34**L contains a female connector **38** for interfacing with the video source **2** through the male connector **3**. Alternatively, an antenna can be provided to receive audio and video signals and other electronic information.

[0098] The head mounted display **1** can be used in numerous and varied applications including, but not limited to, commercial audio/video presentations (television, home video), computer and multimedia presentations, hospital operating room use (e.g. orthoscopic surgery), remote camera monitoring, or any other use where private or detailed viewing of a video image is desired. For certain applications, it is desirable that the body **12** of the head mounted display **1** pivot upward like a visor to permit the user to easily alternate viewing the video image and alive scene. An example of such an application is when the head mounted display **1** is worn by a surgeon during orthoscopic, or other, surgery.

[0099] **FIG. 2** is a rear perspective illustration of the wiring harness enclosed by the head mounted display **1**. In a particular preferred embodiment, audio and video information and supply power is provided via a 10-pin male connector **3**. The male connector **3** registers to a 10-pin female connector **38**. Of these ten pins, seven pins are provided for the display panel power and backlight power, and three pins are provided for audio signals. The seven video signals are provided to a first circuit **210**. The contrast control **36**L is coupled to the first circuit **210** to permit the user to adjust the contrast of the images displayed on the light valve display panels. In other preferred embodiments, other video controls (e.g., brightness, image alignment, color adjust, etc.) are provided and coupled to the first circuit **210**. The first circuit **210** is coupled to a second circuit **220**, which drives the light valve display panels via an N-conductor ribbon cable **310**, where the number of conductors N is determined by the type of display panel.

[0100] The first circuit **210** also separates the backlight power signals from the light valve display panel signals and provides those signals to a backlight driver **240** over a 6-conductor ribbon cable **320**. In addition to the two backlight driver signals, the 6-conductor ribbon cable **320** carries four audio signals. A left channel signal $\mathbf{321}_L$, a common signal $\mathbf{321}_C$, and a right channel signal $\mathbf{321}_R$ are provided on the 6-conductor ribbon cable **320** to the stereo volume control **36**R. In a particular preferred embodiment, the backlight driver **240** and the stereo volume control **36**R are disposed within the opposite stem **30** from the circuit **210**.

[0101] The stereo volume control **36**R permits the user to alter the gain of the signals in the right and left earphones **40**R, **40**L. The adjusted right signal $\mathbf{321}_R$ is provided to the right earphone **40**R and the adjusted left channel signal $\mathbf{323}_L$ is carried by the 6-conductor ribbon cable **320** back to the left earphone **40**L. Both the left and right earphone are also provided with the common signal $\mathbf{321}_C$. In other preferred embodiments, other audio controls (e.g., stereo balance, tone, etc.) are provided.

[0102] The second circuit **220** need not be a discrete device as illustrated. In another preferred embodiment, the second circuit **220** is fabricated with each display panel, such that each display panel is controlled by a respective control circuit.

[0103] The backlight driver **240** provides high voltage signals to the optical assembly **100** over signal lines **340**. The high voltage signals can be used to drive a backlight for each display panel where a transmissive display panel is used. Similarly, the high voltage supply can be used to drive an emissive display panel. In a particular preferred embodiment of the invention, the display panels are of the active matrix liquid crystal display type, which require backlighting.

[0104] In a preferred embodiment the discrete circuiting **38**, **210**, **220**, **240** are disposed near the rear of the head mounted display **1** to provide for more even weight distribution. A preferred control circuit for driving the active matrix display panel **13** is described in U.S. patent application Ser. No. 07/971,399, filed Nov. 4, 1992, the teachings of which are incorporated herein by reference. In another preferred embodiment, the display panels are of the passive matrix liquid crystal display type. A control circuit for driving the passive matrix display panel is described in U.S. patent application Ser. No. 07/971,326, filed Nov. 4, 1992, the teachings of which are incorporated herein by reference.

[0105] **FIG. 3** is a top plan view of the head mounted display **1** taken along section line I-I of **FIG. 1**. The positioning of the wiring harness **300** is illustrated in phantom. Note that the ribbon cables **310**, **320** are routed around the joints **31**, **33** to permit folding of the stems **30** into a compact unit for storage. In a preferred embodiment, the rear hinge **33** employs a split cylinder that rotates independent of the joint so the ribbon cable is not visible when the stems are opened or folded.

[0106] **FIG. 4** is an exploded view of the optical assembly for the head mounted display **1**. A mounting frame **110** is adapted to be mounted to the inner surface of the front section **10** of the head mounted display **1**. The mounting frame **110** has first and second guide rails **111***a*, **111***b* to permit adjustment of the inter-pupil displacement of the light valve display panels. The adjustment of the inter-pupil displacement will be discussed in more detail below.

[0107] Mounted to the mounting frame is a backlighting assembly **120** for use in transmissive display systems. The backlighting assembly **120** contains a backlight **124**, which is preferably a cold cathode backlight. The backlight **124** is disposed in a white reflector **122**, which reflects light from the backlight **124** onto the display panel. In a transmissive color display, the backlighting can be provided by a multicolor sequential backlight where there is a backlight for each primary display color (e.g., red, green, blue) and the backlights are sequentially lit in timing with the switching of the light valve. In another preferred embodiment backlight is provided by direct ambient light **99**. Through a light transmissive front housing section **10** and mounting frame **110**.

[0108] A display holder **130** is positioned on the mounting frame **110** such that the mounting frame rails **111***a*, **111***b* are disposed within respective display holder channels **131***a*, **131***b*. The display holder **130** contains a display area **134** and an aperture **132** through which light from the backlight **124** passes. The display holder **130** also has a geared rack **135** for use in adjusting the inter-pupil displacement. A viscous damped gear assembly **115** meshes with the geared rack **135** such that rotational motion of the gear assembly **115** causes linear movement of the display holder **130** along the mounting frame **110**. As illustrated, the user adjusts the inter-pupil displacement by sliding the left and right display holders **130** along the mounting frame **110**. Alternatively, an axle can extend from the gate **115** to a knob or crank lever, preferably disposed on the forward face of the front section **10** of the display body **12**. Indicator marking can also be provided to guide the user.

[0109] Although only the left portion of the optical assembly **100** is illustrated in **FIG. 3**, the right display holder is similar to the left display holder, except that the right display holder is rotated 180° relative to the left display holder. In that alignment, the left display holder gear rack **135**L is positioned below the gear assembly **115** and the right display holder gear rack **135**R is positioned above the gear assembly **115** as illustrated in **FIG. 2**. Consequently, the gear assembly simultaneously displaces both the left and right display holders when rotated. In a preferred embodiment of the invention, the inter-pupil displacement is adjustable by the user in a range from about 55 mm to about 72 mm to provide an aligned left-right image to the user.

[0110] Returning to the optics assembly, a display assembly **140** is registered to the display chamber **134**. The display assembly contains a translucent plastic light diffuser **142**, a liquid crystal display panel **144**, and a thin plastic matte black mask **147**. The diffuser **142** diffuses light from the backlight **124** that passes through the display holder aperture **132** to provide a light distribution that is sufficiently uniform across the display area **146**. The liquid crystal display panel **144** has a display area that is 0.7 inch as measured diagonally. The liquid crystal display panel **144** is preferably fabricated in accordance with U.S. Pat. No. 5,317,236 (issued May 31, 1994), the teachings of which are incorporated herein by reference. The display panel **144** contains connectors to connect to the 20-conductor ribbon cable **310** (**FIG. 2**). The display assembly **140** is secured in the display holder chamber **134** by an optics holder **150**, which is fastened to the display holder **130**. The optics holder **150**

contains a housing **152** that may be conformable to the users eye to block ambient light and surround a cover glass **154**.

[**0111**] Optional lenses **160** are adaptable to the display holder **150** to, for example, correct the user's near vision.

[**0112**] Although **FIG. 4** illustrates a preferred embodiment employing a transmissive display panel, an optical assembly **100'** can be adapted to receive an emissive display panel **144'**, as illustrated in **FIG. 5**. The emissive display optical assembly **100'** differs from the transmissive display optical assembly **100** in the following respects. The emissive embodiment does not use a backlight **120**. Thus the display holder **130** does not require an aperture **132** nor is a light diffuser **142** required. Instead, the light is provided by emissive material on the display area **146'** that is activated by drive signals. The emissive display panel is preferably fabricated in accordance with the aforementioned U.S. Pat. No. 5,300,788.

[**0113**] **FIG. 6** is a top plan view of the head mounted display **1** in the folded configuration. In particular, note that the nose bridge assembly **24** has been positioned into the retracted position for storage. In the retracted position, the nose bridge assembly **24** does not interfere with the folding of the stems **30**. The hinge points **39** on the forward joints **31** are spring tensioned to facilitate head rotation.

[**0114**] **FIG. 7** is an exploded view of a preferred spring cam assembly **390**R that is used at the hinge port **39**R on the right forward joints **31**R. The cam assembly **390**R comprises a first cam **391**R and a mirror image second cam **392**R. The cams **391**R, **392**R contain an outer section **391**Ra, **392**Ra that registers to a respective receptacle on the body **12** and an inner section **391**Rb, **392**Rb that registers to a respective receptacle on the forward stem **32**R. the inner cams **391**Rb, **392**Rb each include a landing **393** that allows for free play before engagement. A compression spring **395** is disposed between spring landings. The cams **391**R, **392**R compress the spring **395** when rotated together. For the right stem **30**R, free play is exhibited for an angular displacement from the folded position, thereafter a variable return force is extended by the spring **395**, which tends to secure the head mounted display **1** to the user's head. The compression can be adjusted by an adjustment bolt **396** that meshes with a threaded opening on the outer sections **391***a*, **392***b*.

[**0115**] FIGS. **8**A-**8**B are partial views of another preferred stem storage embodiment. The forward stem section **32** is a skeleton frame on which the rear stem section **34** slides for storage. **(FIG. 8B)** Alternatively, the forward stem section **32'** can encapsulate the rear stem section **34'** when stored.

[**0116**] Other preferred embodiments employ other devices to secure the head mounted display, to the user's head. Such devices include an inflatable bladder **61**L, **61**R (shown in phantom in **FIG. 1**), with an associated pump assembly, that is disposed over the user's temple, ear loops **63**L,**63**R, and a headband **65**.

[**0117**] In a preferred embodiment, the head mounted display **1** is formed from injection molded plastic. Particular components, such as the nose bridge support member **15**, are rigid glass filtered molded plastic or a composite laminate.

[**0118**] **FIG. 9** is a front perspective view of another preferred embodiment of a head mounted display unit **1'**. The head mounted display unit **1'** comprises a visor **50** and a headband **60** coupled together by a pair of pivot assemblies **70***a*,**70***b*. The right side pivot assembly **70***a* is a mirror image of the left side pivot assembly **70***b*. The pivot assemblies **70***a*,**70***b* are adjustable and flex such that the head mounted display unit **1'** can be secured to a user's head. The display unit **1'** also includes a right speaker assembly **80***a* and a left speaker assembly **80***b* that can be positioned over the user's ears. Each of these components will be discussed below in further detail.

[**0119**] The visor **50** includes a face plate **52** having a right side **52***a* and left side **52***b*. In a preferred embodiment, transmissive display panels use a dedicated backlight as illustrated in **FIG. 4**. In another preferred embodiment, emissive display panels are used in the visor **50**. The visor further includes a back section **54**, which will be discussed in further detail below.

[**0120**] The visor is connected to the right pivot assembly **70***a* by a right visor hinge **53***a* and to the left pivot assembly **70***b* by a left visor hinge **53***b* **(FIG. 10)**. The visor hinges **53***a*,**53***b* allow the respective pivot assembly **70***a*,**70***b* to flex laterally relative to the line of sight of the user. This flexion, for example, permits the user to separate the distance between the speaker assemblies **80***a*,**80***b* so as to fit the display unit **1'** over the user's head.

[**0121**] The pivot assemblies **70***a*,**70***b* each contain components to displace the visor **50** from the earphones **80***a*,**80***b* longitudinally relative to the user's line of sight. This permits the user to properly adjust the visor for a snug fit. More particularly, longitudinal motion is accomplished by cooperation between a front hinge **71** and a center pivot **75**. The front hinge **71** is mated to a respective visor hinge **53** by a pin **71'**. The front hinge includes a rail section **72** and the center pivot **75** includes a rail section **74**. A center coupler **73** permits the rails **72**,**74** to slide relative to one another. As illustrated in **FIG. 9**, the display unit **1'** is shown fully extended in the longitudinal direction. Within the center coupler **73** is a wheel **76** to facilitate relative motion between the opposed rails **72**,**74**.

[**0122**] The headband **60** is preferably formed of rigid plastic and includes a headpiece **62** having a right side **62***a* and a left side **62***b*. In each side of the headpiece **62**, are a series of spaced detents **68** to couple to a respective pivot assembly **70***a*,**70***b*. optionally, the headband **60** can include a pad **64**, preferably made of a pliable rubber foam to provide a comfortable fit over the user's head.

[**0123**] The pivot assemblies **70***a*,**70***b* cooperate to permit the headband **62** to rotate about the center pivots **75***a*,**75***b*. In a preferred embodiment of the invention, the headband **60** pivots 360° traverse to the plane of the user's line of sight. As illustrated, the headband **60** is positioned at 90°.

[**0124**] A lateral pivot joint **77** is coupled to the respective pivot joint **75** such that when the headband **60** is positioned at the 90° position, a pivot point (not shown) is positioned parallel to the visor hinges **53** such that the speaker assemblies **80***a*,**80***b* can flex laterally. A supporting member **79** is coupled to the lateral hinge **77** via the pivot. The supporting element **79** includes a rail **78**, which is mated to the series of detents **68** by a catch **79**. The headband **60** can be fixed to-positions defined by the detent **68** by moving the headpiece **62** along the rails **78**.

[**0125**] The speaker assemblies **80** are also coupled to the respective pivot assemblies **70***a*,**70***b*. A lobe member **87** is

coupled to the supporting element **79** of the pivot assembly **70** by a hinge **79'**. Each headphone **80** includes a mounting frame **82** which is connected to the lobe member **87**. A speaker component **83** is fixed to the speaker frame **82**. A foam pad **84** rests against the user's ear such that the user hears sound from the speaker component **83** through an aperture **85** in the foam padding **84**.

[**0126**] **FIG. 10** is a front view of the head mounted display unit **1'** of **FIG. 9**. The front view more clearly illustrates the capability of swiveling the earpiece **80***a*,**80***b* about the respective pivot points **79***a*',**79***b*'. Also illustrated are slide tabs **56***a*,**56***b* for aligning the display panels (not shown) within the visor **50**. More particularly, the slide tabs **56** permit adjustment of the inter-pupillary displacement of the display panels. Furthermore, the slide tabs **56** preferably operate independently of each other such that each display panel can be positioned relative to the respective eye to compensate for off-center vision.

[**0127**] **FIG. 11** is a top view of the head mounted display unit **1'** of **FIG. 9**. In particular, the lateral motion about hinge pairs **53-71** and **77-79** are illustrated.

[**0128**] **FIG. 12** is a left side view of the head mounted display device **1'** of **FIG. 9**. As illustrated, the headpiece **62** is fully retracted. In addition, the visor **50** is partially retracted. A pin connector **404** is mounted in element **75***b* to provide video and audio connections to the device. Alternatively, two pin connectors can be used, one on **75***b*, the second on **75***a*.

[**0129**] **FIG. 13** is a rear view of the head mounted display device **1'** of **FIG. 1**. Illustrated are ball joints **75***a*',**75***b*' of the respective center pivot **75***a*,**75***b*. As illustrated, each back section **54** of the visor **50** includes a right viewer **58***a* and a left viewer **58***b*. Each viewer permits the user to view images formed on respective display panels (not shown) disposed within the visor **50**. Preferably, the viewers **58***a*, **58***b* are positioned within respective recessed cavities **57***a*,**57***b* of the back section **54** of the visor **50**. The recessed cavities **57***a*,**57***b* make the display device **1'** eyeglasses compatible. Also illustrated is a nose bridge **59**, which is preferably molded into the back section **54**. Also shown in the figure are control knobs **86***a*,**86***b* protruding through the respective speaker assemblies **80***a*,**80***b*. In a particular preferred embodiment, the right control knob **86***a* controls contrast on the display panels and the left control knob **86***b* controls speaker volume.

[**0130**] **FIG. 14** is a bottom view of the head mounted display unit **1'** of **FIG. 9**. More clearly illustrated are the recessed cavities **57***a*,**57***b* of the back section **54** of the visor **50**. Furthermore, the configuration of the slide tabs **56***a*,**56***b* in a respective slide channel **54***a*,**54***b* of the back section **54** is illustrated. Furthermore, the head pad **64** is illustrated as having longitudinal ribs to help maintain the headpiece **64** in place. The hinge between **52***a* and **71***a*, and the second hinge between **52***b* and **71***b* can be "hidden" as shown in **FIG. 14**.

[**0131**] Between the closed position and the 90° position there can be a discrete number of a detent for positioning the headband **60**. In a particular preferred embodiment, a detent is provided at the 45° position. Alternatively, a friction bearing surface can be used to rotate the visor relative to the headband to hold the visor in a partially raised position.

[**0132**] **FIG. 15** is a front perspective view of the head mounted display device **1'** of **FIG. 9** in a folded position. **FIG. 16** is a bottom perspective view of the display unit **1'** of **FIG. 15**. The unique and novel pivot assemblies **70***a*,**70***b* cooperate to allow the display unit **1'** to be folded into a compact package. The headpiece **60** is rotated about the center pivots **75***a*,**75***b* to the 0° position. The earpiece **80***a*,**80***b* are then folded behind the headpiece **60**, where the earpiece **80***a*,**80***b* lie flat. In a particular preferred embodiment, the supporting elements **79***a*,**79***b* contain a spring-loaded pin **79***a*',**79***b*' to aid the folding of the earpiece **80***a*,**80***b*. The pins **79***a*',**79***b*' can be similar to the cam assembly of **FIG. 7**. The visor is then retracted toward the center pivots **75***a*,**75***b* until the display unit **1'** is securely packed. From this folded position, the head mounted display unit **1'** can be easily packed, carried or otherwise transported. **FIG. 15** also shows manual focus adjust elements **400** located on the top of the visor which are described in greater detail below.

[**0133**] FIGS. **17A-17B** are detailed views of the light pivot assembly **70***a*. As illustrated, the rails **72***a*,**74***a* lie in tracks **73***a*',**73***a*" of a respective center coupler **73***a*. A wheel **76***a* having a pin **76***a*' through its central axis and fixed at one end to the center coupler **73** is disposed between the opposing rails **72***a*,**74***a*. Each opposing rail **72***a*,**74***a* has a respective slot **72***a*',**74***a*' through which the wheel pin **76***a*' extends. The wheel **76***a* is held between slots and contains cable guides as described below. Also illustrated is a connector **89***a* on the lobe member **87***a* for connecting the speaker assembly **80***a* to the assembly. The connector **89***a* is an electrical connector carrying audio signals.

[**0134**] The wiring of the device is as follows: The signals and power enter through the back of **75***b* via a connector. The audio portion then passes through to the earcups with one extending through the headband. The video goes forward through the temple slides via the "spool" or wheel **76***a*. The pin **76***a*' is the center axle that allows it to rotate in the hole in **73**. The pin **76***a*' is secured to the wheel **76***a*. **FIG. 18A** shows pin **76***a*". The wheel has two of these, on opposite sides, 180° apart. These are what ride in the slots **72***a*" and **74***a*" (shown in **FIG. 18A**). The wheel circumference is not in contact with the rails. As shown in the detailed view of **FIG. 18A** which shows the wheel **76***a* held between slots **72***a'*.

[**0135**] **FIG. 18B** shows the wheel **76***a* is also a spool. It serves to control the cable length as the rails are moved fore and aft. The spool **76***a* is designed to be an assembly using two identical pieces **450**, **452**. A pair of kidney-shaped elements **454**, **456** act as cable guides which control the motion of conductor cable **458** as the rails are moved.

[**0136**] **FIG. 19** is a perspective view of an optics module sub-assembly **410** with portions of the housing broken away. Two of these modules **410** are mounted to a triangulated rail system **480** having rods **482***a*, **482***b*, **482***c* and comprise an optics assembly. Each optics module **410** consists of the following: A display **420**; a backlight **490**; a lens **430**; a mirror **432**; an optic housing **412***a*; a focus adjust slide **403**; an IPD adjust/cover **406**; and a rail slide **488**.

[**0137**] **FIG. 20** is a back-side view of two modules **410**, **410'** mounted on a rail system **480**. As shown the two modules **410**, **410'** are mounted on rail system **480**. In addition to the triangulated rods **482***a*, **482***b*, **482***c*, the rail system **480** includes rod and supports **484**. The rods **482** are supported by a central triangulated support member **486**.

Also illustrated are a backlight cable **492** and a display cable **500**. The display cable **500** is fixed to the rail slide **488** by an adhesive or mechanical contact **494**. The display cable **500** includes a cable travel bend **502**, where the display cable **500** folds and unfolds for adjustments to the IPD **407**.

[**0138**] **FIG. 21** is a perspective view of an optics module housing **412**. The housing **412** has a rim **433** that is used to secure the IPD adjustment system and surrounds one of the rails **482***c*. The housing **412** also has legs **431** used to position the ramp and IPD adjustment components.

[**0139**] **FIG. 22** is a side cross sectional view of the optical system with lens **430**, mirror **432**, the backlight **490** and display **420**. Focus is accomplished with a sliding ramp system, shown in **FIGS. 23A and 24B**, which are incorporated into the focus adjust slide **403** and the backlight housing **491**. Tabs **443** protruding from the backlight housing are engaged in slots **445** incorporated in the focus slide **403**. As the focus slide button **407** is moved horizontally, the backlight housing (along with the attached display) move vertically. As shown in FIGS. **23**A-**23**B with the focus adjust in the full down position **440**, the tabs **443** on housing **491** are in the lowest position. In the full up position **442**, the tabs **443** are in the highest position. Multiple tabs **443** ensure positive alignment throughout the motion range. The vertical legs **431** extending from the optic housing keep the backlight/display assembly centered horizontally left to right as well as acting as vertical slide surfaces. The button **403***a* serves as the top of the assembly capturing the top on the focus slide.

[**0140**] **FIG. 25** shows the display placed at the focal length of the lens, thus producing an image of the display at an apparent distance of infinity to the viewer. The lens has a small focal length, preferable about 1 inch. The flat optical element is present to correct for lateral color separation in the lens. This element consists of a diffractive optic **434** designed to compensate for the lateral color in the lens. The mirror serves to fold the optical path to minimize the depth of the head mounted device while extending its height. the mirror is optional to the system and is present for desired form factor. Two such setups make up on binocular head mounted display system: one for each eye. The distance that the displays appear to the viewer can be adjusted for personal comfort, generally between 15 feet and infinity. The magnification of the system is about 10. Other lens systems can be used and are available from Kaiser Electro-Optics, Inc. of Carlsbad, Calif. Such a system is described in U.S. Pat. No. 4,859,031 (issued Aug. 22, 1989), the teachings of which are incorporated herein by reference. Such a system **500** is shown in **FIG. 26**. The display system **500** includes an active matrix display **502**, a polarizing filter **504**, a semi-reflective concave mirror **506**, and a cholesteric liquid crystal element **508**. The image that is generated by the display **502** is transmitted through the filter **504**, the filter **504** the semi-reflective concave mirror **506** to the element **508**. The element **508** reflects the image back onto mirror **506** which rotates the light so that, upon reflection back to element **508**, it is transmitted through element **508** to the viewer's eye **509**. A lens can be used with this system depending upon the size, resolution, and distance to the viewer's eye of the optical system components and the particular application.

[**0141**] One interface device used in conjunction with the various embodiments of the invention is a collapsible keyboard. Preferred embodiments used in conjunction with the display systems described herein are illustrated in connection with FIGS. **27-30**. The term collapsible keyboard, used in connection with the present application, means a keyboard have a plurality of sections which move relative to each other to assume a more compact position for storage or transport in which each section has a plurality of keys activated by a user's fingers. A "standard" keyboard means a keyboard having at least three rows of keys for the alphabet, and can also include a fourth row for the numbers 0-9, a fifth row for a space bar, a sixth row for dedicated function keys, a laterally positioned numerical keyboard, and four cursor movement keys.

[**0142**] As shown in **FIG. 27 a** keyboard **900** with a standard key configuration can be collapsed and connected, as shown in **FIG. 28**, with a head mounted display **902** to form a portable computer system **910**. As described in the various distinct embodiments herein, the central programming unit, the memory and various parts can be included with the portable keyboard, or alternatively with the headpiece.

[**0143**] In **FIGS. 29A and 29B**, another preferred embodiment utilizing a collapsible keyboard **922** with hinged elements **922***a*, **922***b*, can be connected to head mounted monocular display **924** to provide portable computer system **920**.

[**0144**] FIGS. **30**A-**30**C illustrate another portable computer system mountable within portable case **940** with handle **944**. A head mounted monocular display **942** can be stored in case **940** which can have a CD-ROM drive **954**.

[**0145**] **FIG. 31A** is a perspective view of a head-mounted computer **510** with a motorized display arm **516** shown detached. The head-mounted computer **510** includes a head band **512** with an electrical socket **514**. An arm assembly includes a video display panel at the distal end, which provide a video image to a wearer.

[**0146**] The arm assembly includes an electrical plug **515** mated to couple with the socket **514**. Preferably, there is one socket **514** on each side of the head band **512**. The two sockets **514** are bilaterally symmetrical so the arm assembly plug **515** can be coupled to either socket **514** to facilitate use of the display as either a left or right monocular piece. The coupling provides video signals from the computer to the display panel.

[**0147**] The arm **516** is operated by a motor **518** which turns a torque ring **517**. By turning the torque ring **517**, the motor **518** can move the display panel vertically within the wearer's field of view.

[**0148**] **FIG. 31B** is an exploded perspective view of an alternative head-mounted computer **510**. The head band **512** includes a base assembly **512***a* and a computing assembly **512***b*. The computing assembly **512***b* includes a CPU and video board module **522**, a disk drive module **524** and at least one expansion module **525**. The modules **522**, **524**, **525** communicate with the CPU over a flexible bus **513**. The base assembly **512***a* includes a battery module **529**, which supplies dc power to the computer modules **522**, **524**, **525**. Although only one expansion module **525** is illustrated, it should be understood that multiple expansion modules can be added to the flexible bus **523**.

[0149] The display arm assembly includes an electrical plug **515'** mated to couple with a socket **514'** on the head band **512'**. The arm **516** is operated by a motor **518'** which turns a torque ring **517'**. By turning the torque ring **517'**, the motor **518'** can move the display panel vertically within the wearer's field of view.

[0150] **FIG. 32A** is a perspective view of a head-mounted computer **510'** fitted to a wearer. The CPU and video driver are fabricated as an integral part of the head band **512**. Expansion modules **525***a,* **525***b,* **525***c* are removable and coupled to the bus **513'**. As shown, the wearer **601** is fitted with a monocular display. A display pod **1100** is positioned in the wearer's field of view by a display arm assembly **600**. The display arm assembly **600** includes a proximal section **610**, a distal section **620**, a horizontal support member **630**, and a nose piece **650**. The distal arm member **620** telescopes from the proximal arm member **610** using a supporting member **612**. Also shown is an earplug **603**.

[0151] **FIG. 32B** is a perspective view of a preferred display arm, such as shown in **FIG. 32A**. Illustrated is a socket **514'** on a broken away head band **512'** and an arm assembly **600**. The arm assembly **600** couples to the socket **514'** by a matching plug **515'**. As illustrated, the arm assembly is a monocular arm assembly having a single display panel. The plug **515'** and socket **514'** are secured together by thumb screw **605**.

[0152] The arm assembly has a proximal section **610** fixed to the plug **515'** and a distal section **620** that telescopes from the proximal section **610**. A supporting beam **612** is fixed to the distal arm section **620** and telescopes out from the proximal arm section **610** to support the distal section **620**.

[0153] A display pod **1100** encasing the display panel is attached to a horizontal frame **630** by a positioning slide **1105**. The horizontal frame **630** is attached to the distal arm section **620**. A nose bridge **650** supports the horizontal frame **630** on the wearer's nose. An eye cup **1102** conforms to the shape of a wearer's eye. Electrical signals from the plug **515'** to the display panel are carried over a connecting cable **615**.

[0154] **FIG. 33** is a perspective view of another preferred head-mounted computer **510"**. As illustrated, there is a head band **512"**, stereo headphones **603**A, **603**B, a display arm **516** connecting the headband **512"** to a display pod **1100'**, which includes a display panel. The CPU and video drive circuitry are fabricated as an integral part of the head band **512"**. Shown on the head band **512"** are plurality of ports **557** which accept expansion modules. As shown, there is a PMMA interface module coupled to the head band **512"**. A PMMA module **558** is inserted into the PMMA interface module **554**. Also illustrated are expansion modules **514**, an infrared communication sensor **555***a* and a Charge Coupled Device (CCD) camera **555***b*.

[0155] **FIG. 34A** is a partial exploded perspective view of another head-mounted computer **510'"** in accordance with the present invention. The head band **512'"** includes a CPU, a disk drive **564** and expansion modules **525***a,* **525***b,* **525***c* all interconnected together by a flexible bus **563**. Each module **564**, **525** connects to the bus **563** by a respective connector **517***a*.

[0156] Also shown in **FIG. 34A** are earphones **603***a,* **603***b* for providing audio information to the wearer. Attached to one of the earphones is a microphone arm **690** having a microphone **559** at its distal end. The earphones **603***a,* **603***b* are hinged to the head band **512'"** to provide a comfortable fit for the wearer.

[0157] A frame assembly **600'** is coupled to each end of the head band **512'"** by a respective pin **602***a,* **602***b*. The pins **602***a,* **602***b* allow the frame assembly **600'** to be rotated up and over the head band **512'"**. In that position, the head-mounted computer **510'"** is compactly stored and easy to carry.

[0158] The frame assembly **600'** includes a pair of distal arms **610***a,* **610***b* which are coupled to the head band **512** by the pins **602***a,* **602***b*. A horizontal support **630'** telescopes out from the proximal arms **610***a,* **610***b* and around the forehead of the wearer. At least one display pod **1100'** is mounted to the horizontal support **630'**. As illustrated, a single display pod **1100'** provides for monocular display. The display pod **1100'** is preferably slidable along the horizontal frame **630'** for use with either the left or right eye of the wearer. The display pod **1100'** includes an eye cup **1102'**.

[0159] **FIG. 34B** is a side elevation of the head-mounted computer **510'"** of **FIG. 34A**.

[0160] **FIG. 34C** is a perspective view of the head-mounted computer **510'"** of **FIG. 34A** with the frame assembly pivoted. The head-mounted computer **510'"** can be worn in this position by a person or it can be stored or carried in this position.

[0161] **FIG. 34D** is a perspective view of the head-mounted computer **510'"** of **FIG. 34A** worn by a wearer. The display pod **1100** is positioned for viewing and the microphone **559** is positioned to receive voice signals.

[0162] **FIG. 35** is a functional block diagram of a preferred head-mounted computer architecture according to the invention. The head-mounted computer **710** includes a CPU **712** having read and write access over the bus **513 (FIG. 31B)** to a local data storage device **714**, which can be a floppy disk, a hard disk, a CD-ROM or other suitable mass storage devices. The CPU **712** also drives a display driver **716** to form images on the display panel **700** for viewing by the wearer.

[0163] Either the head or body mounted platforms can house a memory or modem card **741** conforming to the Personal Computer Memory Card International Association (PCMCIA) standards. These cards are restricted to fit within a rectangular space of about 55 mm in width, 85 mm in length, and 5 mm in depth.

[0164] A servo **760** communicates with the CPU **712** to vary the position of the display panel **700** relative to the wearer's eyes. The servo **760** is controlled by the wearer through an input device **718**. The servo **760** operates the motor **518 (FIG. 31A)** to raise or lower the vertical position of the display panel **700**. Thus the display panel **700** can be positioned so the wearer can glance up or down at the image without the display panel **700** interfering with normal vision. Additionally, the display panel **700** can be stowed outside the field of view.

[0165] The CPU **712** also sends and receives data from a communication module **720** for interfacing with the outside world. Preferably, the communication module **720** includes a wireless transducer for transmitting and receiving digital audio, video and data signals. A communication module **720**

can also include a cellular telephone connection. The communication module **720** can likewise interface directly with the Plain Old Telephone Service (POTS) for normal voice, facsimile or modem communications. The communication module **720** can include a tuner to receive over-the-air radio and television broadcasts.

[**0166**] The CPU **712** can also receive and process data from an external sensor module **730**. The external sensor module **730** receives data signals from sensors **735**, which provide data representing the external environment around the wearer. Such sensors are particularly important where the wearer is encased in protective gear.

[**0167**] When the wearer is clothed in protective gear, an internal sensor module **740** can receive sensor data from sensors **745** within the protective gear. The data from the internal sensors **745** provide information regarding the wearer's local environment. In particular, the internal sensors **745** can warn the wearer of a breach or failure of the protective gear.

[**0168**] In addition, the CPU **712** can also receive data from a life sign module **750**. The life sign module **750** receives data from probes **755** implanted in or attached to the wearer. The life sign data from the probes **755** provides the CPU **712** with information regarding the wearer's bodily condition so that corrective actions can be taken.

[**0169**] The sensor modules **730**, **740**, **750** receive data from associated detectors and format the data for transmission over the bus **513** to the CPU **712**. The sensor modules can also filter or otherwise preprocess the data before transmitting the preprocessed data to the CPU **712**. Thus, each expansion module can contain a microprocessor.

[**0170**] The wearer can control the operation of the CPU **712** through the input device **718**. The input device **718** can include a keyboard, a mouse, a joystick, a pen, a track ball, a microphone for voice activated commands, a virtual reality data glove, an eyetracker, or other suitable input devices. A preferred eyetracker is described in U.S. Pat. No. 5,331,149 (issued Jul. 19, 1994), the teachings of which are incorporated herein by reference. In a particular preferred embodiment of the invention, the input device **718** is a portable collapsible keyboard. Alternatively, the input device **718** is a wrist-mounted keypad.

[**0171**] As illustrated, the head-mounted computer **710** is a node on a distributed computing network. The head-mounted computer **710** is in communication with a distributed command computer **770** via the communication module **720**. The distributed command computer **770** has access to distributed data storage **775** for providing audio, video and data signals to the head-mounted computer. The distributed command computer **770** can also be in communication with a central operations computer **780** having central data storage **785**. Such external networks can be particularly adapted to applications of the head-mounted display or may be general purpose distributed data networks.

[**0172**] **FIG. 36** is a functional block diagram of a general purpose head-mounted personal computer **710'**. The head-mounted personal computer **710'** includes a communication module **720'** for interfacing with an information exchange **790**. The information exchange **790** can interconnect the personal computer **710'** with other personal computers or informational networks. The communication module **720'** can communicate with the information exchange **790** over a wireless data link, a modem, a facsimile apparatus or a digital data link. The communication module **720'** can include one or more of the aforementioned communication mechanisms, as required. The local data storage **714** includes software applications for execution by the CPU **712**.

[**0173**] In addition to general purpose computing, the head-mounted computer **710** can be adapted for use in many real world situations. In particular, there are situations where a head-mounted computer **710** is especially advantageous. Such situations typically involve applications where the wearer desires or needs auxiliary sensory input.

[**0174**] **FIG. 37** is a functional block diagram for a personal firefighter computing system **710A**. A firefighter in a burning building needs access to at least three pieces of valuable information: (1) where the firefighter is located, (2) the dangers surrounding the firefighter and (3) how to egress the building in an emergency. In addition, the firefighter's commander needs to know where the firefighter is located in the building at all times so that any necessary rescue operation can be expedited. To that end, a head-mounted firefighting computer **710A** is adapted to aid the firefighter. In addition to application software, the local data storage module **714** includes building schematics for the building where the firefighter is located. Local data storage **714** can also include emergency medical instructions.

[**0175**] The firefighter is in communication with a local fire vehicle or truck **770A** via a communication module **720A**. The communication module **720A** provides wireless audio, video and data communication between the firefighter and the truck **770A**. The truck **770A** is equipped with a distributed data storage system **775A** for storing maps and building schematics for the coverage area of the firefighting unit. The truck **770A** can receive additional maps and building schematics from a central firehouse **780A** when the truck **770A** is dispatched outside of its normal operation area. Through the communication module, a commander at the truck **770A** or a central firehouse **780A** can communicate with the firefighter.

[**0176**] In addition, the communication module includes a global positioning satellite (GPS) sensor or other position sensor for accurately determining the position of the firefighter. This information is combined with the building schematics by the CPU **712** to provide the firefighter and the truck **770A** with the firefighter's exact position in the building. In addition, the CPU **712** can calculate and direct the firefighter to all exits from the building. In particular, the firefighter's path into the building can be recorded in the local data storage **714** so the firefighter can be directed out of the building following the path over which the firefighter entered the building. Preferably, the directions for backtracking or otherwise exiting the building are pictorially displayed on the display panel **700** so the firefighter can exit even in low or no visibility situations.

[**0177**] While in a burning building, the firefighter can encounter closed doors having flames behind them. To warn the firefighter, the external sensors **735A** include an infrared detector. Signals from the infrared detector are provided to the CPU **712** by the external sensor module **730A** to warn the firefighter of potential hot spots to avoid. In addition, the infrared sensor preferably permits the firefighter to view the

surrounding through heavy smoke. Data from the infrared sensor can also aid the firefighter in located trapped fire victims. External sensors **735**A can also include a temperature sensor to provide the firefighter and the truck **770***a* with temperature readings within the burning building. Furthermore, a carbon monoxide sensor can supply the firefighter with the concentration of carbon monoxide in the burning building. Similarly, a natural gas sensor can warn the firefighter of a danger of explosion before a fire occurs.

[**0178**] In addition, the firefighter may be equipped with protective gear. Sensors **745**A within the protective gear provide the firefighter with the temperature within the gear, the amount of oxygen remaining in the firefighter's oxygen tanks and an indication of battery power remaining in the firefighter's computer **710**A. If any of these internal sensors **745**A exceed predetermined thresholds, the CPU **712** warns the firefighter to exit the burning building.

[**0179**] **FIG. 38** is a functional block diagram of a head-mounted police computer **710**B according to the invention. As with firefighters, police officers often act alone and must provide information to others and also receive updated information. In a police computer **710**B, it can always be with the police officer to service these information needs.

[**0180**] Local data storage **714** can include city maps, building schematics, suspect rap sheets, and emergency medical information. As with firefighters, information can be exchanged between the police officer, a police car **770**B and a police station **780**B. The police car **770**B stores more general maps and criminal data base in a distributed data storage unit **775**B. The police station **780**B has access to all maps, building schematics and criminal information, which are stored in a central data storage unit **785**B.

[**0181**] A communication module **720**B permits the exchange of audio, video and data information between the police officer and the police car **770**B and police station **780**B. The communication module **720**B can also include a GPS so the police officer and others know the exact position of the police off icer relative to city maps and building schematics. The police computer **710**B can also include an external sensor **735**B that provides the police officer with night vision. In addition, a magnetic or optical reader can be coupled to the external sensor module **730**B. The reader can read driver licenses or other identification and provide the read information to the police station **780**B for verification and a warrants check. The results are then provided and displayed to the police officer without the police officer having to return to the police car **770**B during traffic stops or otherwise.

[**0182**] **FIG. 39** is a functional block diagram of a head-mounted computer **710**C for use by chemical factory workers. In particular, the chemical worker computer **710**C is worn by those chemical factory workers exposed to or likely to be exposed to caustic or toxic chemicals or gasses. Local data storage **714** includes plant schematics and instructions to the chemical worker, including emergency medical instructions.

[**0183**] The communication module **720**C provides an audio, video and data link between the chemical worker and the factory control **770**C, which can provide the chemical worker with further building schematics and instructions. The factory **770**C can also communicate with corporate headquarters **780**C for further guidance. The communication module **720**C can also include a GPS to identify the worker's position.

[**0184**] The chemical worker computer **710**C also includes external sensors **735**C for detecting caustic chemicals and toxic gas. Data from the external sensors **735**C is provided to the CPU **712** by an external sensor module **730**C. The external sensors **735**C provide the chemical worker with information regarding dangerous substances in or that may have leaked into the work area.

[**0185**] The chemical worker may also be working within protective gear. For example, the chemical worker may be working in a hazardous area such as chemical storage tanks. Accordingly, the computer **710**C includes internal sensors for measuring the remaining oxygen in the worker's oxygen tanks and remaining power in the head-mounted computer **710**C. Data from the internal sensors **745**C are provided to the CPU **712** by an internal sensor module **740**C.

[**0186**] **FIG. 40** is a functional block diagram of a head-mounted nuclear plant computer **710**D. Nuclear plant workers face dangers similar to those of chemical workers. However, instead of detecting caustics and toxins, the nuclear worker computer **710**D has external sensors **735**D for measuring radiation levels. The radiation data is provided to the CPU **712** by an external sensor module **730**D.

[**0187**] **FIG. 41** is a functional block diagram of a head-mounted mining computer **710**E. The mining computer **710**E is worn by a coal miner or similar workers. External sensors **735**E measure methane gas concentration. An external sensor module **730**E provides the external sensor data to the CPU **712**, which can warn the miner of a methane danger. In addition, an external sensor **735**E can be a low-light vision sensor.

[**0188**] The communication module **720**E provides an audio, video and data link between the mine control room **770**E and the miner. For example, the control room **770**E can provide a mine supervisor with real-time production rates so the supervisor can shift miners to make efficient use of equipment and human resources. The communication module **720**E can also be used to exchange information with the miners in the event of a mine cave-in.

[**0189**] **FIG. 42** is a functional block diagram of a head-mounted military computer **710**F. The military computer **710**F is preferably adapted to be worn by field solders operating in areas of high toxicity, such as a combat station exposed to biological or chemical agents or radiation. The military computer **710**F can also be worn by military personnel not exposed to such hazards.

[**0190**] The local data storage **714** stores area maps and emergency medical instructions for use by the soldier. The local data storage **714** can also contain repair instructions for equipment used by the soldier.

[**0191**] A communication module **720**F provides a wireless audio, video and data link between the soldier and local command officers **770**F. The local command officers **770**F are in turn linked to remote command officers **780**F. The communication module **720**F can also contain a GPS, which provides the soldier and command officers with the soldier's location. Through the communication module **720**F, the soldier can also receive real-time updates of enemy troop

movements. The communication module **720**F can also include an encryption/decryption unit securing communication channels.

[**0192**] An external sensor module **730**F provides the CPU **712** with data from external sensors **735**F. The external sensors **735**F include detectors for detecting toxins, biological agents and radiation. The external sensors **735**F can also include a night vision unit. If a hazard is detected, the soldier should be clothed in protective gear.

[**0193**] An internal sensor module **740**F provides the CPU **712** with data from internal sensors **745**F disposed within the protective gear. The internal sensors **745**F provide the soldier with a measure of contaminates entering the protective gear.

[**0194**] **FIG. 43** is a functional block diagram on a head-mounted space exploration computer **710**G. The space exploration computer **710**G is worn by an astronaut while in space or exploring another planet or moon. The space exploration computer **710**G is particularly useful for use in constructing structures in outerspace, such as in earth orbit or on another world. Because communications between the Earth and the astronaut may fail, the astronaut needs to have ready access to sufficient information to accomplish the mission independently.

[**0195**] The local data storage **714** contains maps, schematics and instructions for use by the astronaut. The maps can be used by the astronaut while exploring other objects. The schematics can be used by the astronaut while constructing structures and repairing equipment.

[**0196**] A communication module **720**G provides an audio, video and data link between the astronaut and a command ship **770**G and ground station command **780**G.

[**0197**] An external sensor module **730**G provides the CPU **712** with data from external sensors **735**G. The external sensors **735**G can include measuring devices for temperature, pressure and gas content of an atmosphere. The external sensors **735**G can also include a position sensor to locate the relative position of an astronaut from a fixed reference data point, such as a landing craft. The position sensor data in combination with the maps from the local data storage **714** can be processed by the CPU **712** to provide instructions to the astronaut to return the astronaut to the landing craft. The external sensors **735**G can also include an infrared vision unit and a night vision unit to aid the astronaut in dusty environments and at night.

[**0198**] Because the astronaut typically wears a space suit, an internal sensor module **740**G provides the CPU **712** with data from internal sensors **745**G within the spacesuit. The internal sensors **745**G measure the temperature and pressure within the suit. From the internal sensor data, the CPU **712** can regulate the temperature and pressure and detect a breach in the suit. In addition, the internal sensors **745**G include a sensor for measuring the remaining oxygen supply in the tanks. From the oxygen supply data, the CPU **712** calculates the remaining time until the oxygen supply is depleted and warns the astronaut when it is time to return to a safe environment.

[**0199**] A life sign module **750**G provides the CPU **712** with data from probes **755**G. The probes **755**G measure the astronaut's body temperature, blood pressure, pulse and respiration rate.

[**0200**] **FIG. 44** is a functional block diagram of a general purpose head-mounted survival computer **710**H. The survival computer **710**H facilitates the survival and rescue of a wearer. The survival computer **710**H can be integrated into a sea survival suit, an arctic survival suit or be a part of a desert survival pack. Pre-stored in the local data storage **714** are maps and medical instructions.

[**0201**] A communication module **720**H includes a GPS and emergency communication equipment. The GPS data is combined by the CPU **712** with the maps from the local data storage **714** to determine the ground position of the wearer. The CPU **712** can then calculate a path for the wearer to take to obtain safe shelter. The ground position information is also broadcast over emergency channels by the communication module **720**H to a rescue team **770**H. Once contact is made with a rescue team **770**H, the rescue team **770**H can provide additional maps and other information to the wearer over a data link. For use of sea, the communication module **720**H can also include a sonar transducer for attracting submarines and ships (e.g., a failure of radio communication).

[**0202**] An external sensor module **730**H provides the CPU **712** with data from external sensors **735**H. The external sensors **735**H can include temperature and pressure detectors. The external sensors **735**H can also include a night vision unit.

[**0203**] In the event the wearer is wearing protective gear in a cold environment, an internal sensor module **740**H provides the CPU **712** with data from internal sensors **745**H within the protective gear. The internal sensors **745**G measure the temperature within the gear. The CPU **712** can then regulate the temperature and detect a breach in the gear.

[**0204**] A life sign module **750**H provides the CPU **712** with data from probes **755**H. The probes **755**H measure the wearer's body temperature, blood pressure, pulse and respiration rate.

[**0205**] **FIG. 45** is a functional block diagram of a head-mounted maintenance computer **710**I. A maintenance computer **710**K is worn by repair and maintenance personnel. The maintenance computer **710**I provides the wearer with access to all relevant repair and maintenance manuals and can include diagnostic sensors integrated with the maintenance computer **710**I.

[**0206**] FIGS. **46**A-**46**E are views of a head-mounted maintenance computer **710**K of **FIG. 45** worn by a maintenance worker. The maintenance computer **710**K is disposed within the hard hat **800**.

[**0207**] **FIG. 46A** is a front view of the protective headpiece used with the maintenance computer **710**K of **FIG. 45** worn by a maintenance worker. The hard hat **800** includes a blister compartment **810**, which is shaped to receive the display pod **1100**. As illustrated, the display pod **1100** is positioned for viewing by the maintenance worker. The pod is protected from impact by the visor **811** and blister **810**.

[**0208**] **FIG. 46B** is a side view of the maintenance computer **710**K of **FIG. 45** partially in cross section. The display pod **1100** is coupled to a housing **635** which is supported by two horizontal members **632**, **634** within the blister compartment **810**. The housing **635** is slidable along the supporting members **632**, **634** to position the display pod **1100**

horizontally within the worker's field of view. The display pod **1100** is vertically positioned by a telescoping member **636** that is received by the base **638**. In a particular preferred embodiment of the invention, the horizontal and vertical displacement of the display pod **1100** is controlled by a servo **760** (**FIG. 45**).

[**0209**] Shown in **FIG. 46C** is a side view in which the protective headpiece has a side receptacle **1204** in which the housing **1206** containing the audio circuit, the connector to the display, the earpiece **1208** and microphone **1210** can be inserted. The view of the underside of the helmet is shown in **FIG. 46D** where the visor **811** has tabs **1202** on both sides so that the monocular display can be mounted at **1200** adjacent to each tab. In the event of an impact to the display pod **1110**, it will detach to prevent injury to the user.

[**0210**] **FIG. 46E** is a perspective view of the display pod mounting apparatus of **FIG. 46B**. Shown more clearly are the supporting members **632**, **634** and the housing **635**. The display pod **1100** is shown with the telescoping member **636** contracted. Also illustrated is a hinge **639** to allow the worker to pivot the display pod **1100** momentarily out of the field of view.

[**0211**] FIGS. **47A-47D** illustrated another preferred embodiment of the invention in which a display is mounted above field of view of the user and which projects an image onto a transparent monocular or binocular system in front of the user's eye or eyes. **FIG. 47A** shows a monocular system **1600** in which a display is position in housing **1606** on visor **1605** and projects an image onto lens **1604**. The user can also see through lens **1602** and **1604** to the outside environment. As shown in **FIG. 47**B, the display is connected by wire or fiber optic cable **1612** to a video source and can be positioned in from of either eye by sliding along rack or rail **1610**. The hinge **1614** provides for rotation of lens **1604** against lens **1602**. As seen in **FIG. 47**C, the lens can rotate about hinge **1624** and can be moved along distance **1622**. Electronics **1626** for display **1620** can be incorporated into visor **1605**. **FIG. 47D** shows a bumper **1640** for display unit **1632** which can rotate bout hinge **1630** to position lens **1634**, **1638**.

[**0212**] **FIG. 48** is a perspective view of another preferred embodiment of the invention. The wearer is equipped with a helmet **800'** adding a blister chamber **810'** and a display pod **1100**. The wearer is also equipped with protective goggles **1200** and a breathing apparatus **1300**.

[**0213**] Although the computer **710** has been described as a head-mounted computer, it should be understood that the computer **710** can be otherwise carried on the wearer's person. For example, the computer **710** can be disposed within a backpack, chestpack or beltpack. Other mounting configurations are also meant to be within the scope of the invention. Furthermore, it should be understood that the computer **710** and input device **718** can be remote from the display **700**. For example, the computer **710** can be in a briefcase removed from the person wearing a head-mounted display.

[**0214**] **FIG. 49** is a perspective view of a back-mounted computer and a head-mounted display. The computer **850** is mounted to a harness **852** onto the wearer's back. A data cable **853** from the computer **850** drives the display panel in a display pod **1100** positioned in the wearer's field of view. An audio microphone **559** is mounted in the display pod **1100** for providing local commands to the computer **850** over the data cable **853**. Also illustrated is an optional headband **2** for holding the system onto the wearer's head. Preferably, the display pod **1100** can be flipped upward or downward out of the wearer's field of view. The display pod **1100** can also be clipped into a hardhat.

[**0215**] **FIG. 50** is a perspective view of a chest-mounted computer according to a preferred embodiment of the invention. A computer **860** is mounted to a wearer's chest by a harness **862**. Control of the computer **860** is provided by a roller ball input device **868**, which is coupled to the computer **860** by data cable **863**. A display housing **867** is extendable from the housing of the computer **860** to permit the wearer to view a display panel. The housing can also have a keypad or a receptacle for a portable or collapsible keyboard (dashed lines).

[**0216**] **FIG. 51** is a perspective view of a wrist-mounted computer and display apparatus. The computer body **870** is secured to a wrist by a wristband **872**. The computer body includes controls **878** and a display panel display housing **877**. A display panel **1000** in the display housing **877** is viewed through a holographic lens **879**.

[**0217**] **FIG. 52A** is a perspective view of a person wearing magnifying glasses equipped with a display. The glasses **1905** are secured to the wearer's head by a headband **1902**. The glasses **1905** include magnifying lenses **1907** and a hinge **1909** for receiving the display pod **1100**.

[**0218**] **FIG. 52B** is a schematic diagram of the optics of **FIG. 52A**. Illustrated are the display pod **1100** and magnifying glasses **1905**. In the display pod **1100** are a display panel **1000**, a reflecting mirror **1130** and a viewing lens **1160**. The light rays from the display panel **1000** are reflected off from the reflecting mirror **1130** and passed through the lens **1160**. Because the glasses **1905** include a magnifying lens **1907**, the display pod viewing lens **1160** is a reducing lens. The reducing lens **1160** and the magnifying lens **1907** cooperate to produce a durable image to the wearer.

[**0219**] **FIG. 53** is a perspective view of a display pod **1100** mounted to a pair of safety glasses with the display pod and safety glass shown exploded. The frame **1915** includes electrical coupling **1913** for interfacing with a display driver and mounting pins **1919**. The display pod is coupled to the mounting pins **1919**. Safety glass **1917** is positioned between the display pod **1100** and the wearer's eyes to protect the eyes from an impact with the display pod **1100**. Preferably, the display pod **1100** is shock resistant. In addition, the mounting pins **1919** are designed to breakaway under stress so that if the display pod **1100** is subjected to an impact, the display pod **1100** will breakaway from the frame **1915**.

[**0220**] **FIG. 54** is a perspective view of an industrial display. A display housing **1105** is preferably fabricated from impact resistant material. The eyecup **1102** is preferably fabricated from foam or another soft pliable material to protect the user's eye. A protective shade **1102** can be raised or lowered to protect the display panel **1000**, the viewing lens **1150** and other internal components from damage.

[**0221**] **FIG. 55** is a perspective view of a monocular display. The frame **1925** secures around the back of a

wearer's head and earpieces **1921***a,* **1921***b* secure the frame **1925** to the user's head. Preferably, the frame **1925** is extendable from the earpieces **1921***a,* **1921***b* at joints **1922***a,* **1922***b* so the frame **1925** can accommodate various head-sizes. The earpieces **1921***a,* **1921***b* have a respective socket coupling **1923***a,* **1923***b.* A display arm **1926** includes a bilaterally symmetrical plug **1924** that mates with either socket **1923***a,* **1923***b.*

[**0222**] The display arm **1926** includes a proximal section **1927** and a distal section **1929**. The distal section **1929** can be telescoped away from the proximal section **1927**. In addition, a pivot **1928** of the proximal section **1927** permits the display arm **1926** to be rotated upward or downward. A display pod **1200** is coupled to the distal section **1929**. The display pod **1200** can be pivoted at various angles relative to the wearer's line of sight.

[**0223**] FIGS. **56A-56C** are perspective views of another head-mounted display apparatus according to the invention. **FIG. 56A** illustrates a headband **1932**, a mounting plate **1931** and a brim housing **1930**. Pins **1936** on the headband **1932** are inserted into slots **1937** of the mounting plate **1931** to secure the mounting plate to a wearer's head. The brim housing **1930** is mated to tabs **1934** on the mounting plate **1931**. A display housing **1300** is slidable along a rail **1933** on the brim housing **1930**.

[**0224**] **FIG. 56B** is a rear perspective view of the brim housing **1930** of **FIG. 56A**. Shown is a channel **1935** which mates with the tabs **1934** of the mounting plate **1931**. This mating process is illustrated in **FIG. 56C**. The brim housing **1930** is slid along the mounting plate **1931** registering the tabs **1934** with the channel **1935**. **FIG. 56D** shows a more rigid plastic headband **1800** with manual adjustment **1810** to control the size.

[**0225**] FIGS. **57A-57H** show detailed perspective views of a particular preferred display of **FIG. 56A**. The display pod **1300** includes an eyecup **1302** that is fabricated from a pliable material. A first thumb screw **1310** can be turned by a wearer to adjust the vertical position of the display pod **1300** in the wearer's field of view. A second thumb screw **1320** is turned by the wearer to adjust the distance of the display pod **1300** from the wearer's eye. The display pod **1300** can be tilted up by the wearer out of the field of view. The visor **1930** as shown in **FIGS. 57B and 57C** can also house the circuit harness for the display which can be connected either through the arm **1332** suspending the pod at hinge **1338** or through cable **1334** as shown in **FIG. 57D**. A microphone can be connected to visor by connector **1330** and input cable **1336** can be connected on the opposite side.

[**0226**] **FIGS. 57E, 57F, 57**G and **57**H illustrate various rotational positions of display pad including against the user's glasses **1342** at **1340**, or against the eye **1343**, or retracted above the eye at **1344**, or closed against visor **1350** at **1345**.

[**0227**] **FIG. 58A** is a perspective view of a wearer equipped with a preferred embodiment of a head-mounted display. A display pod **1400** is positioned within the wearer's field of view. Dual headbands **1942***a,* **1942***b* secure the display pod **1400** to the wearer's head. A connecting cable **1943** carries data signals to the display pod **1400**.

[**0228**] **FIG. 58B** is a perspective view of the head-mounted display of **FIG. 58A**. The display pod **1400** is coupled to the dual headbands **1942***a,* **1942***b* by a telescoping arm assembly **1946** and a pair of ball joints **1945, 1440**. The arm assembly **1946** includes a proximal arm section **447** which is coupled to the headbands **1942***a,* **1942***b* by a first balljoint **1945**, which permits the arm assembly **1946** to be rotated in three dimensions relative to the headbands **1942***a,* **1942***b.* The arm assembly **1946** also includes a distal arm segment **1949** which telescopes from the proximal arm segment **1947**. The distal arm segment **1949** is coupled to a balljoint **1440** of the display pod. **1400**. The second balljoint **1440** permits the display pod **1400** to be positioned in three dimensions relative to the display arm **1946**. As illustrated, the display pod **1400** is positioned for viewing by a wearer's right eye. Illustrated in phantom is the positioning of the display pod **1400** for viewing by the wearer's left eye.

[**0229**] FIGS. **59A-59F** are perspective views of a collapsible display according to a preferred embodiment of the invention.

[**0230**] **FIG. 59A** is a perspective view of a collapsible display pod **1500** in its working position. The display pod **1500** includes a top section **1510** and a bottom section **1590** that are rigid. The top section **1510** includes a mounting tab **1502** and a control tab **1504**. The display pod **1500** includes a collapsible wall **1550** between the top section **1510** and the bottom section **1590**. Also shown is a viewing lens **1560**.

[**0231**] **FIG. 59B** is a schematic diagram of the optical components or the collapsible display pod **1500** of **FIG. 59A** in the working position. A mirror surface **1525** is joined to a first pivot **1524** and a second pivot **1526**. The first pivot **1524** is coupled to the top housing section **1510** by an extension member **1522**. The second pivot joint **1526** couples the mirror **1525** to the viewing lens **1560**. The viewing lens **1560** is further coupled to a sliding member **1528**.

[**0232**] **FIG. 59C** is a schematic diagram of the optics of **FIG. 59D** being partially collapsed. As illustrated, the mirror **1525** has been rotated toward the top housing section **1510** by pivoting on the first pivot **1524**. The sliding member **1528** has slid toward the first pivot member **1524** along the upper housing segment **1510**. Consequently, the second pivot **1526** has pivoted the viewing lens **1560** toward the mirror **1525**.

[**0233**] **FIG. 59D** is a schematic diagram of the optics of **FIGS. 59B and 59C** in the collapsed position. As can be seen, the extension member **1522** is chosen to be of sufficient length so the viewing lens **1560** fits in the space between the folded mirror **1525** and the upper housing segment **1510**.

[**0234**] **FIG. 59E** is a perspective view of the display pod **1500** in the collapsed position. The wall **1550** has folded like an accordion between the upper housing segment **1510** and the lower housing segment **1590**. **FIG. 59F** is a perspective view of the collapsed display pod **1500** mounted to a representative frame **1950**.

[**0235**] **FIG. 60** is a perspective view of a head-mounted display integrated with a television tuner. The head-mounted display **1960** includes a headband **1962** with stereo headphones **1963***a,* **1963***b.* A television or radio receiver **1965** is integrated into the headband **1962**. The receiver **1965** includes an antenna **1966** and controls **1967**. The controls **1967** can include a tuning control a loudness control and a picture control. A display pod **1600** is connected to the

headband **1962** by a display arm **1966**. Preferably, a display arm **1966** can be adjusted by the wearer.

[**0236**] FIGS. **61A-61B** are perspective views of another collapsible keyboard according to the invention which can be used with the various head-mounted and body mounted displays set forth herein. As shown in **FIG. 61A**, the keyboard **2110** is in its operating position. The keyboard **2110** includes a central body **2116** and two wing members **2112**, **2114**. When in the operating position **2110**, the keys **2115** of the keyboard are in position for use by a user. Also shown are two hinges **2111** and **2113** which permit the keyboard to be folded in the direction of the arrows. As shown in **FIG. 61B**, the collapsible keyboard of **FIG. 61A** is in the folded position. The right wing **2112** folds over the left wing **2114** which is in turn folded over the central body **2116**.

[**0237**] **FIG. 62** is another foldable keyboard according to the invention. As illustrated, the keyboard **2120** is divided into four segments: a left segment **2122**, a left center segment **2124**, a right center segment **2126** and a right segment **2128**. Each segment includes a plurality of keys **2125**. To fold the keyboard, the bottoms of the left center and right center segments **2124**, **2126** are folded together at a central hinge **2127**. Then the left and right segments **2122**, **2128** are folded at hinges **2121**, **2123** respectively.

[**0238**] The display panels described herein can generate either monochrome or color display images. Color images can be generated using color filters. Color filters are preferably fabricated within the display panel and registered to the pixels.

[**0239**] FIGS. **63A-63H** are schematic diagrams of a preferred process flow sequence for fabrication of a color filter system for a transferred film active matrix display. This process provides a compact, high resolution, high speed color display that fits within a small volume suited for head-mounted displays. In particular, the color filters are polyimide color filters. More specifically, the color filter illustrated is a PIC Green 02 filter available from Brewer Science, Inc. of Rolla, Mo.

[**0240**] As shown in **FIG. 63A, a** pixel element **2010** having an electrode **2012** and a transistor **2014** is formed on a semiconductor layer **2015**, preferably a thin film single crystal silicon having a silicon-on-insulator structure, but optionally being formed with a polycrystalline or amorphous silicon material for applications having greater tolerances for speed and resolution. The single crystal silicon film is particularly well suited for small, high resolution, high speed displays used in head-mounted computer system applications. An optional nitride layer **2020** can be formed over the pixel element **2011**, as shown in **FIG. 63B**. An optional adhesion promoter (not shown) can next be coated and baked onto the nitride layer **2020**. In a preferred embodiment, however, an adhesion promoter is not used.

[**0241**] A layer of polyimide, such as PiC Green 02 is spun on over the circuit at a speed of 1,000 rpm for 90 seconds. The resulting structure is shown in **FIG. 63C**. The polyimide layer **2030** is about 1 to 5 microns thick. In a preferred embodiment, the polyimide layer **2030** is about 2 microns thick. The structure is then subjected to a solvent removal bake at 120° C. for 60 seconds on a hotplate. It should be noted that a solvent bake is not critical. The structure is then subjected to a second or "beta" bake at 168° C. on a hotplate for 90 seconds in vacuum contact. It is critical that the temperature be uniform in the beta bake step because the beta bake defines the develop processing characteristics.

[**0242**] As shown in **FIG. 63D, a** photoresist pattern **2040** is applied to the structure. The positive photoresist is coated, baked and exposed **2050** at twice the normal dosage. The pattern is then developed with a standard fluid developer for 40 seconds. The developer is preferably a metal ion free developer such as Shipely MF-312. The polyimide **2030** will develop with the photoresist. The structure is then rinsed in water and dried with nitrogen or clean compressed air.

[**0243**] The photoresist is then removed with a commercially available carbon-based solvent which is spun onto the structure. The resulting color filter structure **2035** shown in **FIG. 63E** is then hand baked between 200° C. and 260° C. for one hour in an oven. In a preferred embodiment, the baked temperature is 230° C.

[**0244**] The above process is repeated for the red and the blue color filters to provide a full color liquid crystal display or an electroluminescent display.

[**0245**] There are many alternative color combinations for producing polyimide material used in color filter array fabrication. Properties which may vary with different formulations are: color coordinates, spectral transmission, heat stability, color saturation and light stability. Depending on the application, an appropriate formulation can be chosen to maximize the qualities which are most desirable. Additionally, the thickness of the applied polyimide film can also be varied. In this case the tradeoff is between color saturation and spectral transmission. In the present process, a layer thickness of about 1.4 um is used on all three colors. If increased transmission is critical, a slightly thinner coating can be used, but this can result in the sacrificing the desired level of color saturation.

[**0246**] After the color filter layer (RGB) has been fabricated, it is necessary to encapsulate the colored polyimides with some type of barrier or capping layer **2060**. This step shown in **FIG. 63F** is important for a number of reasons. Dye can leach out of the polyimide causing changes in the actual color of the pixels, cross contamination of adjacent material whether it is adhesive, liquid crystal if the color filter elements are disposed on the liquid crystal side of the active matrix, or another medium. In addition, colored polyimide, especially certain commercially available types are particularly sensitive to heat and light degradation. This is an important problem in the case of applications using higher light intensity levels or relatively hot operating environments, but we have discovered that by encapsulating the polyimides with a thin film coating such as silicon nitride, followed by mounting to glass with adhesive, not only is the leaching of the dye eliminated but also the heat and light degradation problem. Other types of barriers as indicated above can also be used to achieve the same effects.

[**0247**] **FIG. 63G** illustrates the transferred color filter array transferred onto a glass substrate **2064** with an adhesive layer **2062**. After transfer, the resulting structure is packaged, is shown in **FIG. 63H** with the liquid crystal material **2066** and the counterelectrode structure **2068**. The resulting color active matrix display can be mounted in any of the head-mounted display systems described herein and

used to provide a full color display, or alternatively, any selected number of colors including a two color display such as green or blue on a dark background as is commonly found in many computer applications displaying text and/or simple graphics.

[**0248**] As display resolutions increase, the demand for real estate may increase such that the electrodes and transistors are formed in separate layers. The electrode is interconnected to the transistor by an interconnect through an insulator layer. This way, pixel elements having stacked electrodes and transistors can be fabricated in an array of pixels. An EL stack, for example, employing a white phosphor layer and color filter elements are then fabricated over the electrodes, either by monolithic fabrication or transfer and alignment on a prefabricated EL stack. Interconnection through the insulator can also be incorporated into a liquid crystal display.

[**0249**] The display panel is controlled by control circuitry which is preferably head-mounted with the display panel. The circuitry can be provided on circuit boards disposed within the head gear or directly on the display panel. Such control circuitry is described in detail in U.S. patent application Ser. No. 08/106,416, filed Aug. 13, 1993, the teachings of which are incorporated herein by reference.

[**0250**] **FIG. 64** is a schematic diagram of a preferred control circuit. Components of this circuit can be incorporated directly in the headset of a head-mounted display, or can be used in a separate body mounted circuit housing as described elsewhere herein. The latter option is highly desirable in applications in which the headset must have minimum weight and volume and still provide portability. A video signal source (not shown) provides video signals to the head-mounted display. The video signal source can be any analog or digital video signal source including a Video Graphics Array (VGA) adaptor, the Apple™ Macintosh™ family of computers, a National Television Systems Committee (NTSC) composite video source, a high-resolution professional display adapter, a Charge-Coupled-Device (CCD), or other similar sources. In a particular preferred embodiment, the active matrix display panel is adapted as a computer-controlled light valve.

[**0251**] Horizontal and vertical synchronization signals from the video signal source are provided to a video interface **2410** on data lines **2313** and **2314**, respectively. Red-Green-Blue (RGB) video signal components, if supplied by the video signal source, are provided to an encoder **2440** on respective data lines **2301**, **2302**, **2303**. If discrete color (e.g., RGB) signals are not supplied by the video source (e.g., NTSC composite video signal), then a single encoded video signal **2341** must be supplied by the video source. The appropriate video signal is supplied to a video polarity network **3450** on data line **2441**, the operation of which is described in greater detail below.

[**0252**] The active matrix **2390** (shown in phantom) operates as a multi-frequency display device. Typically, video signals from the video signal source will not be synchronized to a fixed frequency. A change in the video mode can change the resolution of the data, measured in pixels. For example, a VGA adaptor generates synchronization signals that vary depending on the particular video mode in which the adaptor is operating. A standard VGA adaptor can generate a vertical synchronization frequency between about 56 and 70 Hz and a horizontal synchronization frequency between about 15 and 35 Khz. For professional display purposes (e.g., CAD/CAM) the vertical and horizontal synchronization frequency can be higher than described. To handle current high resolution display applications, the display device can preferably adapt to vertical synchronization frequencies up to about 100 Hz and horizontal synchronization frequencies up to about 66 Khz. In addition, a change in the video mode can also invert the polarities of the synchronization signals. Consequently, a preferred embodiment of the invention adapts to changes in the synchronization signals caused by changes in the video mode.

[**0253**] The video interface **2410** is used to interface the head-mounted display with the horizontal and vertical synchronization signals from the video signal source. In a preferred embodiment, the video interface **2410** interfaces with a standard VGA display adapter to display the video image at a horizontal resolution of 640 pixels and a vertical resolution of 480 pixels (640H×480V). In another preferred embodiment, the display resolution is 1024H×768V. In yet another preferred embodiment, the display resolution is 2048H×2048V. The video interface **2410** adjusts to changes in the input synchronization frequencies by detecting polarity, frequency, or phase changes in the input signals.

[**0254**] A preferred embodiment of the invention for use with video signals for a VGA adaptor supports 720H×400V text mode, 640H×480V graphics mode, 640H×400V graphics mode and 640H×350V graphics mode. Table I summarizes video rates and resolutions associated with these supported VGA modes. It will be understood that other video modes having different video rates and resolutions can be supported as well, with minor modifications.

TABLE I

TYPICAL VGA RATES AND RESOLUTIONS

Mode	Graphics	Graphics	Graphics	Text
Resolution	640H × 480V	640H × 400V	640H × 350V	720H × 400V
Pixel Rate	25.175 MHz	25.175 MHz	25.175 MHz	28.322 MHz
Horizontal Rate	31.47 KHz	31.47 KHz	31.47 KHz	31.47 KHz
Vertical Rate	59.94 Hz	70.08 Hz	70.08 Hz	70.08 Hz
Hsync Polarity	Negative	Negative	Positive	Negative
Vsync Polarity	Negative	Positive	Negative	Positive

TABLE I-continued

TYPICAL VGA RATES AND RESOLUTIONS								
HORIZONTAL	Time	Pixels	Time	Pixels	Time	Pixels	Time	Pixels
Active Scan	25.42 uS	640	25.42 uS	640	25.42 uS	640	25.42 uS	720
Front Porch	0.64 uS	16	0.64 uS	16	0.64 uS	16	0.64 uS	18
Sync Width	3.81 uS	96	3.81 uS	96	3.81 uS	96	3.81 uS	108
Back Porch	1.91 uS	48	1.91 uS	48	1.91 uS	48	1.91 uS	54
Back Porch	1.91 uS	48	1.91 uS	48	1.91 uS	48	1.91 uS	54
VERTICAL	Time	Lines	Time	Lines	Time	Lines	Time	Lines
Active Scan	15.25 mS	480	12.71 mS	400	11.12 mS	350	12.71 mS	400
Front Porch	0.35 mS	11	0.38 mS	12	0.18 mS	37	0.38 mS	12
Sync Width	0.06 mS	2	0.06 mS	2	0.06 mS	2	0.06 mS	2
Back Porch	1.02 mS	32	1.11 mS	35	1.91 mS	60	1.11 mS	35
Total Period	16.68 mS	525	14.27 mS	449	14.27 mS	449	14.27 mS	449

[**0255**] Horizontal and vertical synchronization signals are provided at TTL levels on respective incoming data lines **2313**, **2314** from a VGA adapter or similar video source. A control processor **2412** examines the incoming video stream and tracks mode changes, which provide for variable frequency multi-scanning capability. Upon detecting a mode change, the control processor **2412** signals the mode change to a dot clock regenerator **2414**. Optionally, the control processor **2412** interprets input signals from a remote control device over a remote signal line **2331** and either controls hardware or provides remote mouse functionality over a mouse signal line **2309** to the computer, as required. Preferably, a non-volatile Editable Erasable Programmable Read-Only Memory (EEPROM) is used to store setup and adjustment parameters. The program for the processor is contained within a Erasable Programmable Read-Only Memory (EPROM) which simplifies upgrading the functionality of the program. Most digital logic is contained within Field Programmable Gate Arrays (FPGAs), which are also programmed from the same EPROM. Upgrading the EPROM allows functionality to be changed, added or repaired, all with little manufacturing cost. The dot clock regenerator **2414** provides a pixel data signal on line **2411**, a pixel clock signal on line **2413**, a frame switch signal on line **2415**, a select clock signal on line **2417**, and a select data signal on line **2419**.

[**0256**] The dot clock regenerator **2414** recreates the pixel dot clock used by a computer to output pixels. The regeneration must be accurately controlled because it is very important to provide a clock that is centered over each pixel and does not drift. Thus, a clock must be recreated that can be used to sample a pixel and move to the next pixel. The dot clock regenerator **2414** includes a phase locked loop (PLL) network and Voltage Controlled Oscillator (VCO), which are responsive to the mode change signal over data line **2416**. There is no standard for the frequency of the incoming video signal, which can range from 20 Mhz to over 30 Mhz, depending on the source.

[**0257**] An analog RGB signal is not quantizied because CRTs do not require the analog signal to have a notion of screen position. Unlike CRTs, flat panel displays have quantizied pixels. Hence, the analog RGB signal must be quantizied to each pixel. For the quantization to be accurate, each scan line of the analog RGB signal must be divided into discrete values. That task is performed by the dot clock regenerator **114**. As summarized in Table I, the VGA 640H×480V modes include 800 pixels per horizontal scan. Unfortunately, only one timing signal (i.e., the horizontal sync) is received per scan line. Thus, the PLL must operate with a divider multiplication ratio of 800:1. Typical phase-lock loop circuits become unstable at divider multiplication ratios over about 8:1. PixelVision, Inc. of Acton, Mass. manufactures and sells video processing circuitry containing a preferred dot clock regenerator **2414**, under Part Nos. PV-CIFK-xxxx. Other suitable dot clock regenerators **2414** may be available from other sources. The dot clock regenerator **2414** preferably permits a user to fine tune the position of the reconstructed dot clock, through the control processor **2412**.

[**0258**] The video interface **2410** converts the synchronization signals from the video signal source into pixel timing information for the pixel columns and select line timing information for the pixel rows of the active matrix. The video interface **2410** provides control registers to adjust and delay the pixel clock **2413**, pixel data **2411**, select clock **2417**, and select data **2419** so the image generated by the video source (e.g. VGA) can be precisely mapped to the active matrix **2390** pixel resolution (e.g., 640H×480V). The video interface **2410** provides a pixel data signal and a pixel clock signal to a data scanner **2420** on respective data lines **2411**,**2413**. The video interface **2410** also provides a select line data signal and a select line clock signal to select scanners **2430***a*,**2430***b* on respective data lines **2417**,**2419**. Preferred embodiments of the invention supply one or four clocks on each clock signal line **2413**,**2417**. By supplying four clock signals on each clock signal line **2413**,**2417**, the circuitry of the scanners **2420**,**2430** can be simplified. This is especially important if the scanners **2420**,**2430** are fabricated on the SOI structure with the active matrix **2390** and the video interface **2410** is a discrete component. Finally, the video interface **2410** provides a frame switch signal to the video polarity network **2450** on data line **2415**.

[**0259**] Encoder **2440** may be a gray-scale encoder or a color encoder. The RGB signal is provided from the pinout connectors on signal lines **2301**,**2302**,**2303**. The encoder converts the RGB signal into a mapped analog signal. A gray-scale encoder employs a colored mapper to convert the RGB signal into a gray-scale equivalent. In a preferred embodiment, each color from the RGB signal is weighted

and then summed together to form a gray-scale signal. The gray-scale mapper uses the equation

$$V_o = w_R V_R + w_G V_G + w_B V_B, \quad (1)$$

[0260] where V_o is the gray-scale output signal; w_R, w_G, and w_B are the respective weighting for the red, green and blue signals; and V_R, V_G, and V_B are the respective signal strengths for the red, green and blue signals. In a preferred embodiment of the invention, w_R=0.3, w_G=0.59 and w_B=0.11 to result in a weighting function approximately equal to the human eye's relative response. However, other weighting values can be obtained by changing resistor values in the circuit. If the video source supplies a monochrome signal, that signal is preferably applied at the green input **2302**. In addition, other mapping techniques may be employed without affecting the scope of the invention (e.g., digital mapping). A color encoder employs a multiplexer to multiplex the RGB signal into a mixed color equivalent. In a preferred embodiment, the encoder **2440** provides either one of gray-scale or color encoding, as required. The encoded analog signal from either the gray-scale mapper or color encoder is provided to the video polarity network **2450** via an encoder line **2441**.

[0261] In a further embodiment, the video source can provide an NTSC composite video signal on signal line **2423**. In an NTSC composite video signal, the RGB signals and the synchronization signals are superposed as a single analog video signal. Because the RGB signals are already encoded in a NTSC composite video signal, no separate encoding is necessary. Instead, the superposed RGB data is extracted from the NTSC composite video signal. The superposed RGB data from an NTSC composite video source is provided to the video polarity network **2450** on line **2441**.

[0262] The video polarity network **2450** generates odd and even video driven signals **2459** from the frame switch data on line **2415** and the analog video signal on line **2441**. The video drive signal **2459** is adjusted by a contrast control signal **2351**, a back porch clamp signal **2353**, a brightness control signal **2355**, the liquid crystal reference voltage **2461**, and feedback signals **2473**, **2483** from a temperature measurer **2470** or light meter **2480**. The video polarity network **150** incorporates a video amplifier **2452**, bias network **2454**, and a video switch **2456**.

[0263] The analog video signal from line **2441** is provided to the video amplifier **2452**. The video input **2441** is amplified by an amount determined by the contrast (gain) control voltage **2351** generated by a digital-to-analog (D/A) converter **2350**. Because the video input is AC coupled, the DC restore function is done by a back porch clamp (not shown). The Brightness (level) control **2355** is the reference voltage for the clamp which is obtained from the D/A converter **2350**. The feedback for the clamp is taken from the main video outputs, which closes the loop around the full video path. In a preferred embodiment, this block is implemented by a National Semiconductor LM1201 amplifier, although other suitable amplifiers can be used.

[0264] One important feature is that there are two complementary outputs from the video amplifier **2452**. A normal output is positive-white from a (clamped) level a few volts above ground. An inverted output is negative white from a few volts below the positive supply voltage (12V). These two outputs are inherently in phase, and have the same gain because they are preferably taken from the same output transistor. Alternatively, the amplifier gain can be nonlinear (e.g., gamma functions). The normal and inverted amplifier signals are fed to a bias network **2454**.

[0265] The bias network **2454** is an RC network that biases the two outputs of the video amplified **2452** toward each other. Those outputs can never reach the same voltage, due to the nature of the output stage. But the inputs to the drive amplifiers **2458** should be capable of crossing over in some cases, to allow a full range of contrast and brightness adjustment. The output signals from the bias network **2454** are fed to the video polarity switch **2456**.

[0266] To provide the AC component of the required active matrix drive signal, video switches select either the normal or the inverted video signals. These video signals are supplied alternately to an odd drive amplifier, with an even drive amplifier receiving the opposite signal. Preferably, the switches change every video field (every vertical sync). The switch could occur more or less often, as might be desirable for crosstalk or other purposes; a preferred switching rate allows switching every scanline. The switches used are FET-based "T" switches, which provide good isolation and fairly low "on" resistance. A switch is also used to select between the outputs, to always provide a "normal" feedback signal for clamping comparison. The video polarity switch **2456** is synchronized to the frame rate provided over the frame switch line **2415**.

[0267] In a preferred embodiment, a column inversion technique is used to reduce crosstalk between select lines to reduce or avoid the production of a DC offset voltage. The video switch **2456** provides an alternating opposite polarity for the column pixels. The even column pixels are operated at the opposite polarity of the odd column pixels. The polarities of the column pixels are switched on each sequential frame. For example, on one frame even column pixels operate at a positive polarity and odd column pixels operate at a negative polarity. On the next sequential frame, the switch **2456** switches the polarities of the odd and even columns. As a result, the even column pixels operate at a negative polarity and the odd column pixels operate at a positive polarity. The odd column polarity is provided to the active matrix on line **2459*b*** and the even column polarity is provided to the active matrix on line **2459*a***.

[0268] Another preferred embodiment of the invention uses a frame inversion technique instead of column inversion. Using frame inversion, each column during any one frame has the same polarity. On alternating frames, as clocked by the frame switch **2415**, the polarity of each column is reversed. In that way, the polarity of the entire active matrix **2390** is inverted on each successive frame. Note that this frame inversion embodiment would not require the use of distinct odd and even data registers **2422**.

[0269] The data scanner **2420** provides for double storage of pixel data. The data scanner **2420** interfaces with the pixel data signal on line **2411** and the pixel clock signal on line **2413** via interface component **2425**. The data scanner **2420** uses an odd shift register array **2422*a*** and an even shift register array **2422*b*** to store data for each scan. The odd shift register array **2422*a*** stores data to odd column pixels and the even shift register array **2422*b*** stores data to even column pixels.

[0270] A transmission gate **2426** transmits pixel actuation signals to the active matrix **2390**. The transmission gate **2426** is partitioned into odd column gate **2428***a* and even column gate **2428***b*, which are registered to respective columns of the data scanner shift registers **2422***a*,**2422***b*. A serial data stream of a video drive signal is provided to the odd and even column pixels on respective signal lines **2459***a*,**2459***b*. An appropriate signal level is transmitted by the transmission gate **2426** to the correct pixel as triggered by the output from the shift registers **2422**.

[0271] To reduce signal loss across the active matrix, the select lines are driven from both sides by select scanners **2430**. As viewed in **FIG. 64**, left select scanner **2430***a* and right select scanner **2430***b* are connected to the select data line **2419** and the select clock line **2417**. The left select scanner **2430***a* provides a select line signal at the end of the select line nearest the lowest-valued pixel column (C_1) and right select scanner **2430***b* provides a select line signal at the end of the select line nearest the highest-valued pixel column (C_N). Thus, an identical select line signal is supplied at both ends of the select line.

[0272] In a further preferred embodiment, at least one sensor **2392**, **2394** is integrated into the active matrix **2390** for gray-scale adjustments. The sensor may be a temperature diode, a photo transistor or diode, or combinations thereof. A preferred embodiment employs at least one temperature sensor **2392** and at least one light sensor **2394**. The signals from the sensors provide feedback signals, to the video polarity network **2450**, which adjusts the gray-scale signal strength.

[0273] In a preferred embodiment, the sensors **2392**,**2394** are uniformly distributed throughout the active matrix. For example, each pixel element, or a selected group of pixel elements can have an associated sensor **2392**,**2394**. The sensor to pixel ratio need not be one-to-one however. In another material embodiment, the sensors **2392**,**2394** are distributed around the perimeter of the active matrix.

[0274] **FIG. 65** is a schematic diagram of a projection head-mounted display **2500** shown partially in cross section. Shown is a housing **2510** separated from a user's head by a foam pad **2515**. The housing **2510** is preferably fabricated from plastic but other lightweight materials can also be used. A backlight **2520** projects light through a display panel **2530** to form an image. The image is operated on by an optics system **2550** similar to that described in the aforementioned U.S. Pat. No. 4,859,031. Illustrated is a concave partially reflective mirror **2512** and cholesteric liquid crystal (CLC) element **2554**.

[0275] The image is circularly polarized by the display panel **2530** and is transmitted through the concave mirror **2512**. The image is then reflected by the CLC element **2554** back toward the concave mirror **2512**, which reverses the polarization and reflects the image back toward the CLC element **2554**. The CLC element **2554** now transmits the reverse polarized image. The light may be reflected once or multiple times from the concave mirror **2512** ot correctly orient the polarization of the image for transmission through the CLC element **2554**.

[0276] The image is then reflected from a viewing surface **2580** toward the user's eyes. The viewing surface **2580** is preferably a partially transmissive mirror that overlays the generated image over the images of real objects in the wearer's field of view.

[0277] Circuitry for driving the display panel **2530** is located both on the display panel **2530** and on a printed circuit board **2560** disposed within the housing **2510**. Alternatively, circuit elements may be located elsewhere on the headpiece or on the user's body. A flexible flat cable **2565** interconnects the circuit board **2560** with the display **2530**. A focus adjust mechanism **2570** is provided for use by the wearer. The display panel **2530** can be an active matrix liquid crystal display as described in greater detail above.

[0278] **FIG. 66** is a perspective view of the projection display unit of **FIG. 65** worn as a monocle by a user. The display unit **2500** is secured to the wearer's head by a headband **2502** or by other head mounting support systems described elsewhere herein, including hardhats and face protectors. The focus adjust mechanism **2570** is a knob that can be turned by the wearer. When not in use, the partially transmissive mirror **2580** can be folded out of position into the display unit **2500**.

[0279] **FIG. 67** is a perspective view of a binocular reflective head-mounted display. As illustrated, two display units **2500***a*', **2500***b*' are coupled together and fastened to the wearer's head by a support such as headband **2502**'. The focus adjust mechanisms **2570***a*', **2570***b*' are slide mechanisms. Each eye has a corresponding partially transmissive mirror **2580***a*', **2580***b*'.

[0280] FIGS. **68-70** illustrate other preferred embodiments of a direct-view display system. Light from a display device **2500** is represented by light ray **2615**. The light ray **2615** from the display **2500** can be combined with ambient light **2690** before becoming incident on a viewer's eye **2600**. Thus, the image created by the display device **2500** appears to the viewer to float in the viewer's field of vision.

[0281] There are various means of combining the display image **2615** with the ambient image **2690**, which will now be described. **FIG. 68** illustrates a preferred embodiment of the invention using a prism **2710** to combine the images. The hypotenuse of the prism can be coated with a partial reflector or electrochromatic material **2712** to attenuate ambient light **2690**. **FIG. 69** illustrates a preferred embodiment of the invention using a lenticular structure **2720** as an image combiner. The gradings are spaced such that the eye **2600** cannot distinguish lines in the structure **2620**. In a preferred embodiment, the grating density is greater than or equal to 150 per inch and can be color selective so as to redirect only a certain color or colors that will be easily viewed by the user relative to the ambient light. **FIG. 70** is similar to the lenticular structure in **FIG. 69** except that a Fresnel lenticular structure **2730** is used. In both lenticular structures **2720**, **2730**, the flat surface **2722**, **2732** can be coated with a partial reflector or electrochromatic material. In either of FIGS. **68-70**, the display system **2500** is mounted adjacent to the viewer's head. In a preferred embodiment of the invention, the display device **2500** can alternatively be mounted adjacent to the sides of the viewer's head.

[0282] Equivalents

[0283] Those skilled in the art will know, or be able to ascertain using no more than routine experimentation, many equivalents to the specific embodiments of the invention described herein. These and all other equivalents are intended to be encompassed by the following claims.

We claim:

1. A head-mounted projection display apparatus comprising:

a display panel to generate an image;

an optic system to receive the generated image and to extend the optical path of the generated image by reflection of the image within the optic system, the optic system transmitting a projection image; and

a viewing surface to receive the projection image from the optic system, the image on the viewing surface being viewable by a user.

2. The apparatus of claim 1 wherein the display panel is an active matrix display panel.

3. The apparatus of claim 1 wherein the display panel includes a polarizer to polarize the generated image in a first orientation, the optic system processing the image in the first orientation to a second orientation for receipt by the viewing surface.

4. The apparatus of claim 3 wherein the image is processed by reflection with the optic system.

5. The apparatus of claim 1 wherein the optic system comprises:

a first partially-transmissive mirror having a light transmissive first surface to transmit the generated image into the optic system and a reflective second surface to alter the polarization of light incident on the first surface;

an element to reflect light having a first polarization back toward the second surface of the first mirror and to transmit light having a second polarization.

6. The apparatus of claim 5 wherein the first mirror is a concave mirror.

7. The apparatus of claim 5 wherein the element is a cholesteric liquid crystal element.

8. The apparatus of claim 5 wherein the second surface of the first mirror alters light of the first polarization of light of the second polarization.

9. The apparatus of claim 1 wherein the viewing surface is an optical combiner which combines the projection image with a viewing image.

10. The apparatus of claim 9 wherein the viewing image is a direct view image.

11. The apparatus of claim 9 wherein the optical combiner is a partially transmissive mirror.

* * * * *