US005615132A

United States Patent [19]

Horton et al.

[11] **Patent Number: 5,615,132**

[45] **Date of Patent: Mar. 25, 1997**

[54] **METHOD AND APPARATUS FOR DETERMINING POSITION AND ORIENTATION OF A MOVEABLE OBJECT USING ACCELEROMETERS**

[75] Inventors: **Mike A. Horton**, Berkeley; **A. Richard Newton**, Woodside, both of Calif.

[73] Assignee: **Crossbow Technology, Inc.**, San Jose, Calif.

[21] Appl. No.: **184,583**

[22] Filed: **Jan. 21, 1994**

[51] **Int. Cl.**[6] **G09G 3/02**

[52] **U.S. Cl.** **364/516**; 364/517; 364/578; 364/410; 364/449.1; 340/988; 351/209

[58] **Field of Search** 364/410, 449, 364/453, 516, 517, 578; 351/210, 209; 340/988, 989, 990

[56] **References Cited**

U.S. PATENT DOCUMENTS

3,983,474	9/1976	Kuipers	324/43 R
4,017,858	4/1977	Kuipers	343/100 R
4,849,692	7/1989	Blood	324/208
4,852,988	8/1989	Velez et al.	351/210 R
4,945,305	7/1990	Blood	324/207
4,988,981	6/1991	Zimmermann et al.	340/709
5,072,218	12/1991	Spero et al.	340/980
5,245,537	9/1993	Barber	364/453 X
5,280,265	1/1994	Kramer et al.	338/210
5,290,964	3/1994	Hiyoshi et al.	84/600
5,307,072	4/1994	Jones, Jr.	342/147
5,373,857	12/1994	Travers et al.	128/782
5,422,653	6/1995	Maguire et al.	345/9

OTHER PUBLICATIONS

GDMulti–Receivers/Transmitters Tracking Device, A Flock of Birds™ Product Specification by Asension Tech. Corp. ACT Nov. 1992.

3 Space Fastrak Product specifications by PDLHEM US; Jul. 1992.

Friedmann, Martin, Staner, Thad and Pentland, Alex, "Synchronization in Virtual Realities," 1992 PRESENCE vol. 1, No. 1, pp. 139 – 144.

J. A. Adam, "Virtual Reality is for Real", IEEE Spectrum Oct. 1993, pp. 22–29.

T. A. DeFanti et al., "A 'Room' with a 'View'", IEEE Spectrum Oct. 1993, pp. 30–33.

Analog Devices product specification for Model ADXL50*, "Monolithic Accelerometer with Signal Conditioning", pp. 1–16 Jun. 1993.

R. A. Quinnel, "Software Simplifies Virtual–World Design", EDN–Technology Update, Nov. 25, 1993, pp. 47–54.

North Atlantic Treaty Organization, Agard Lecture Series No. 133 "Advances in Strapdown Intertial Systems", pp. 3–1 through 3–29; May 1994.

(List continued on next page.)

Primary Examiner—James P. Trammell
Assistant Examiner—Kamini Shah
Attorney, Agent, or Firm—Albert C. Smith

[57] **ABSTRACT**

A three-dimensional position and orientation tracking system uses accelerometers to measure acceleration of a moveable object (e.g., a head-mounted display unit or a data glove). A tracking processor generates both position and orientation information on the object relative to a simulation environment as a function of the acceleration data. In one embodiment, a simplified radar-based tracking system is disposed relative to the object and periodically provides additional tracking data on the object to the tracking processor. The tracking processor uses the additional data to correct the position and orientation information using a feedback filter process. The position and orientation information signals generated can be used, for example, in a simulation or virtual reality application. Position and orientation information is received by a simulation processor relative to the object. The simulation processor modifies a simulation environment as a function of the position and orientation information received. Modified simulation environment information (e.g., video and/or audio information) is then presented to a user.

21 Claims, 9 Drawing Sheets

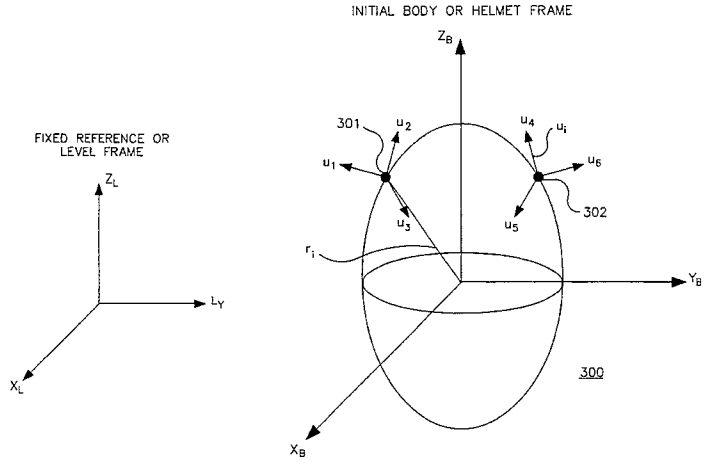

OTHER PUBLICATIONS

North Atlantic Treaty Organization, Agard Lecture Series No. 82 "Practical Aspects of Kalman Filtering Implementation", pp. 2–1 through 2–11; 1976.

A. Gelb et al., "Applied Optimal Estimation", The M.I.T. Press, pp. 50–143 1974.

Shetty et al., Image–sensor–based target maneuver detection; Optical Engineering vol. 32, No. 11, pp. 2735–2740 Nov. 1993.

Guedry et al., The dynamic of spatial orientation during complex and changing linear and angular acceleration, Journal of Vestibular Research:Equilibrium and Orientation, vol. 2, No. 4, pp. 259–283 Nov. 1992.

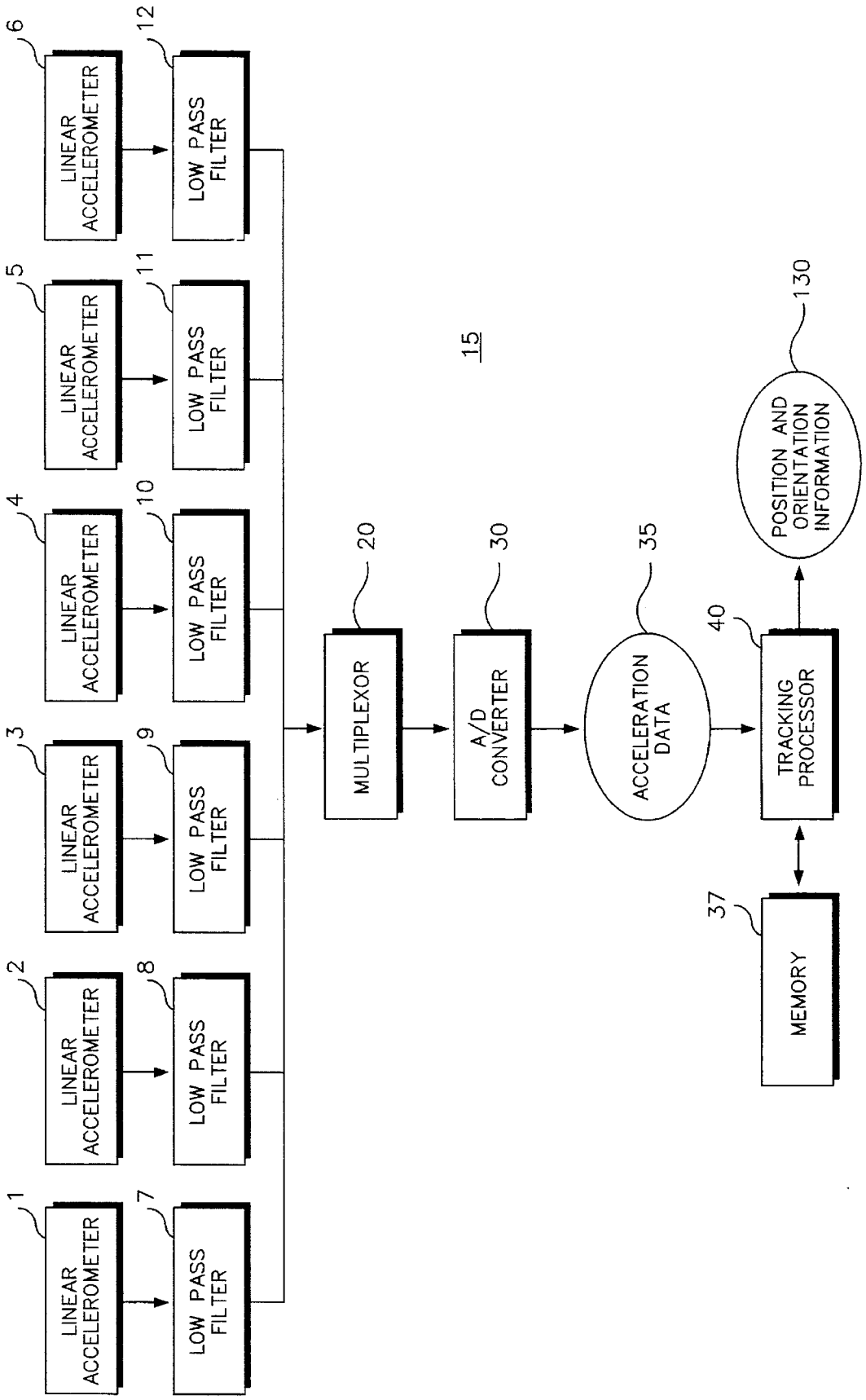
1
LINEAR ACCELEROMETER
7
LOW PASS FILTER
2
LINEAR ACCELEROMETER
8
LOW PASS FILTER
3
LINEAR ACCELEROMETER
9
LOW PASS FILTER
4
LINEAR ACCELEROMETER
10
LOW PASS FILTER
5
LINEAR ACCELEROMETER
11
LOW PASS FILTER
6
LINEAR ACCELEROMETER
12
LOW PASS FILTER
15
20
MULTIPLEXOR
30
A/D CONVERTER
35
ACCELERATION DATA
40
TRACKING PROCESSOR
37
MEMORY
130
POSITION AND ORIENTATION INFORMATION

FIGURE 1

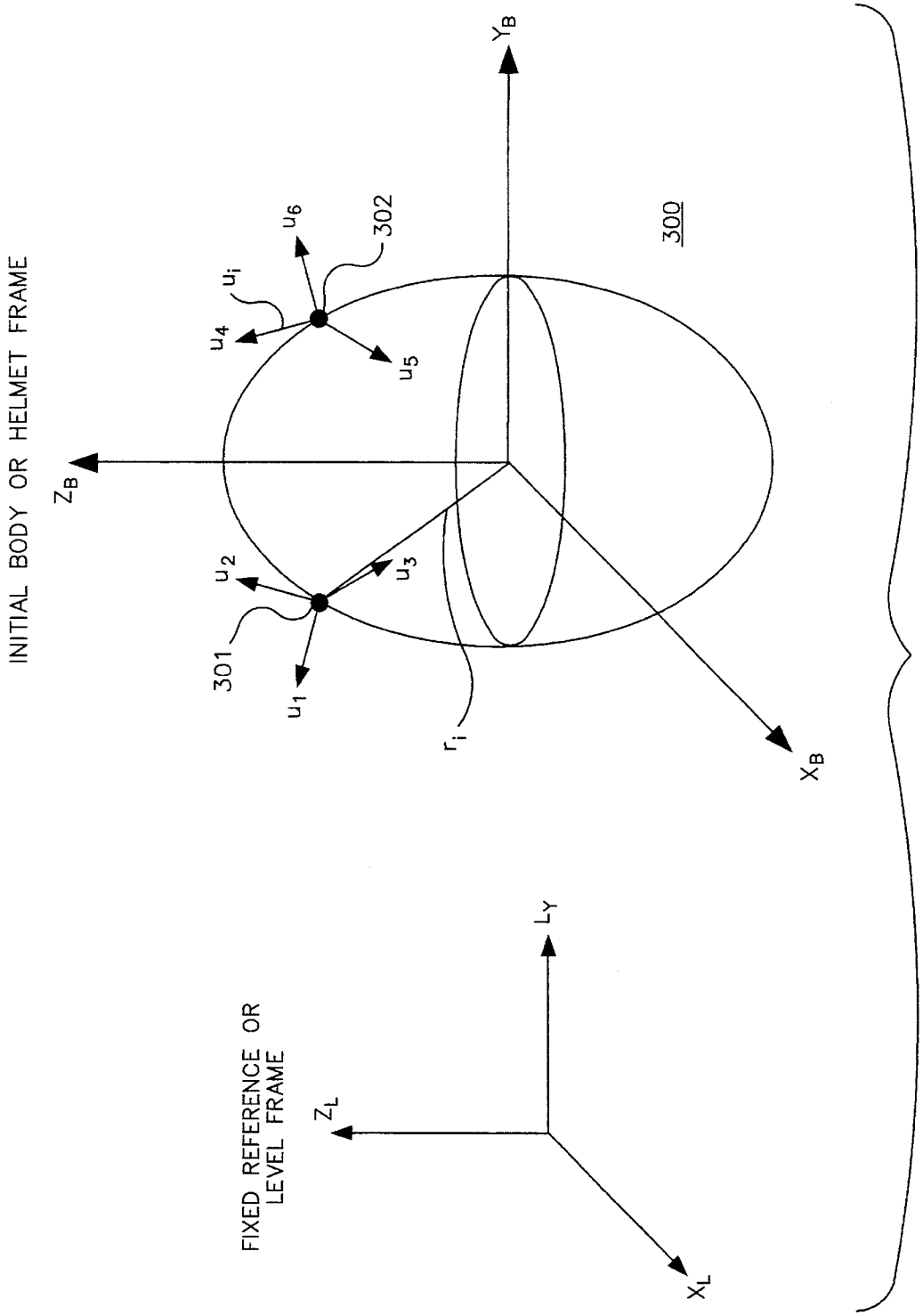
INITIAL BODY OR HELMET FRAME
Z_B
Y_B
X_B
u_1
u_2
u_3
u_4
u_5
u_6
u_i
301
302
300
r_i
FIXED REFERENCE OR LEVEL FRAME
Z_L
L_Y
X_L

FIGURE 2

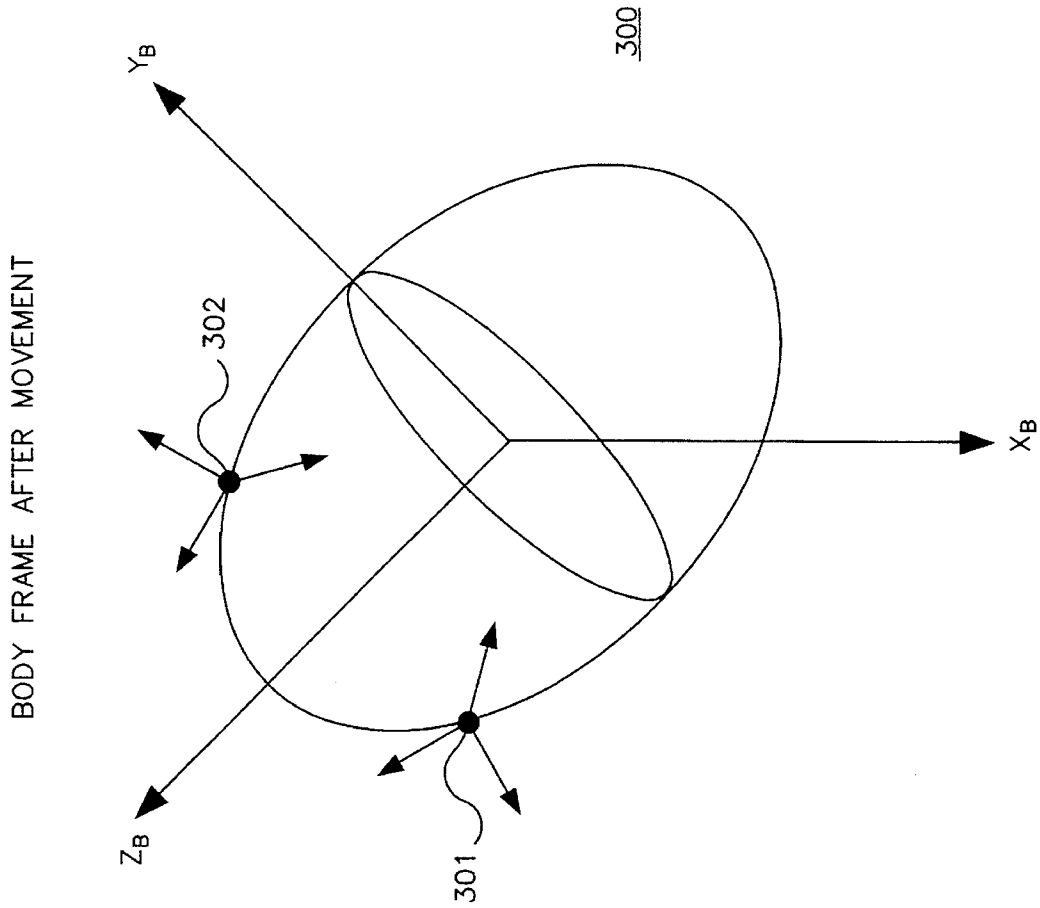

FIGURE 2A

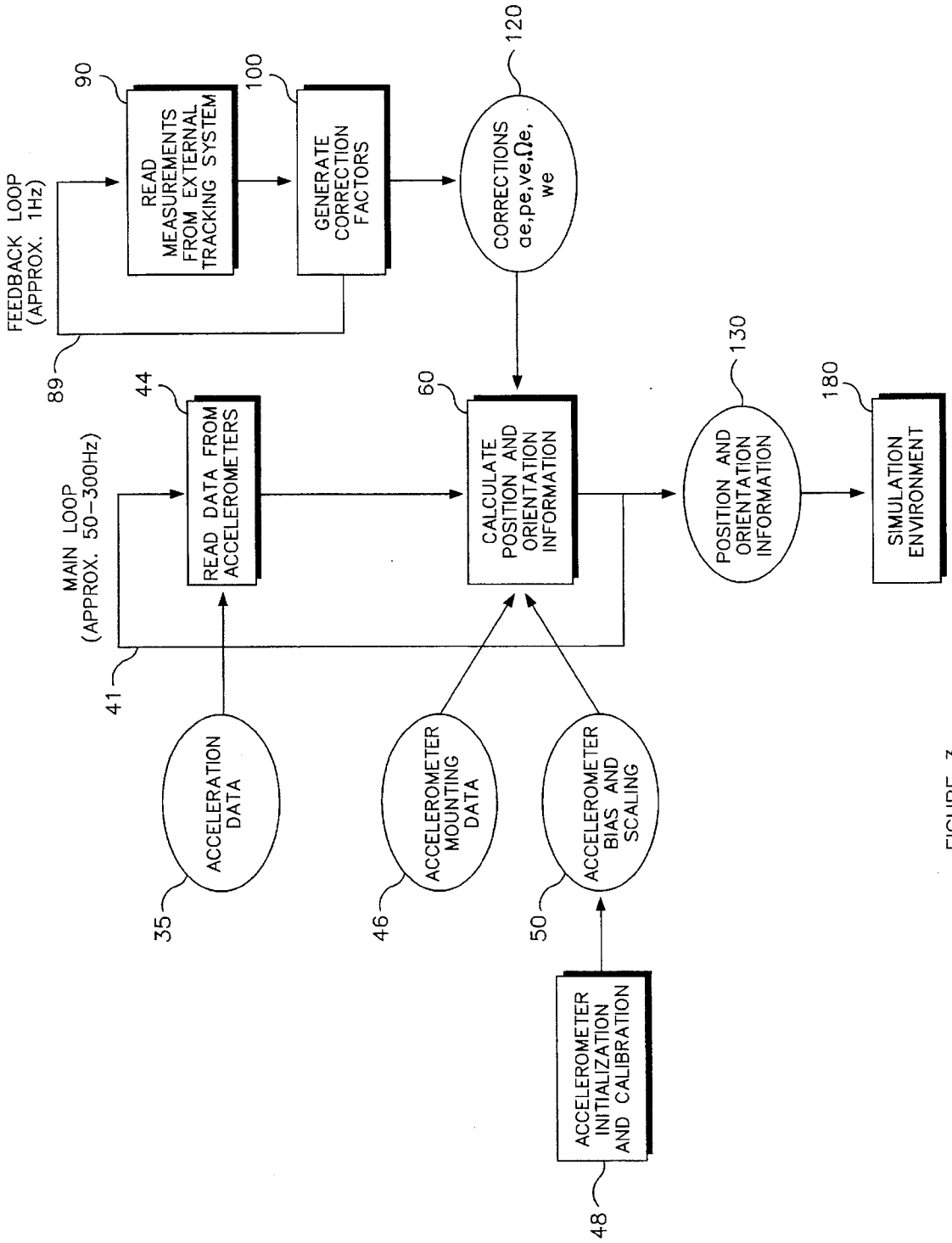
FEEDBACK LOOP
(APPROX. 1Hz)
90
READ MEASUREMENTS FROM EXTERNAL TRACKING SYSTEM
100
GENERATE CORRECTION FACTORS
120
CORRECTIONS
ae,pe,ve,Ωe,
we
89
MAIN LOOP
(APPROX. 50–300Hz)
44
READ DATA FROM ACCELEROMETERS
60
CALCULATE POSITION AND ORIENTATION INFORMATION
130
POSITION AND ORIENTATION INFORMATION
180
SIMULATION ENVIRONMENT
41
ACCELERATION DATA
35
ACCELEROMETER MOUNTING DATA
46
ACCELEROMETER BIAS AND SCALING
50
ACCELEROMETER INITIALIZATION AND CALIBRATION
48

FIGURE 3

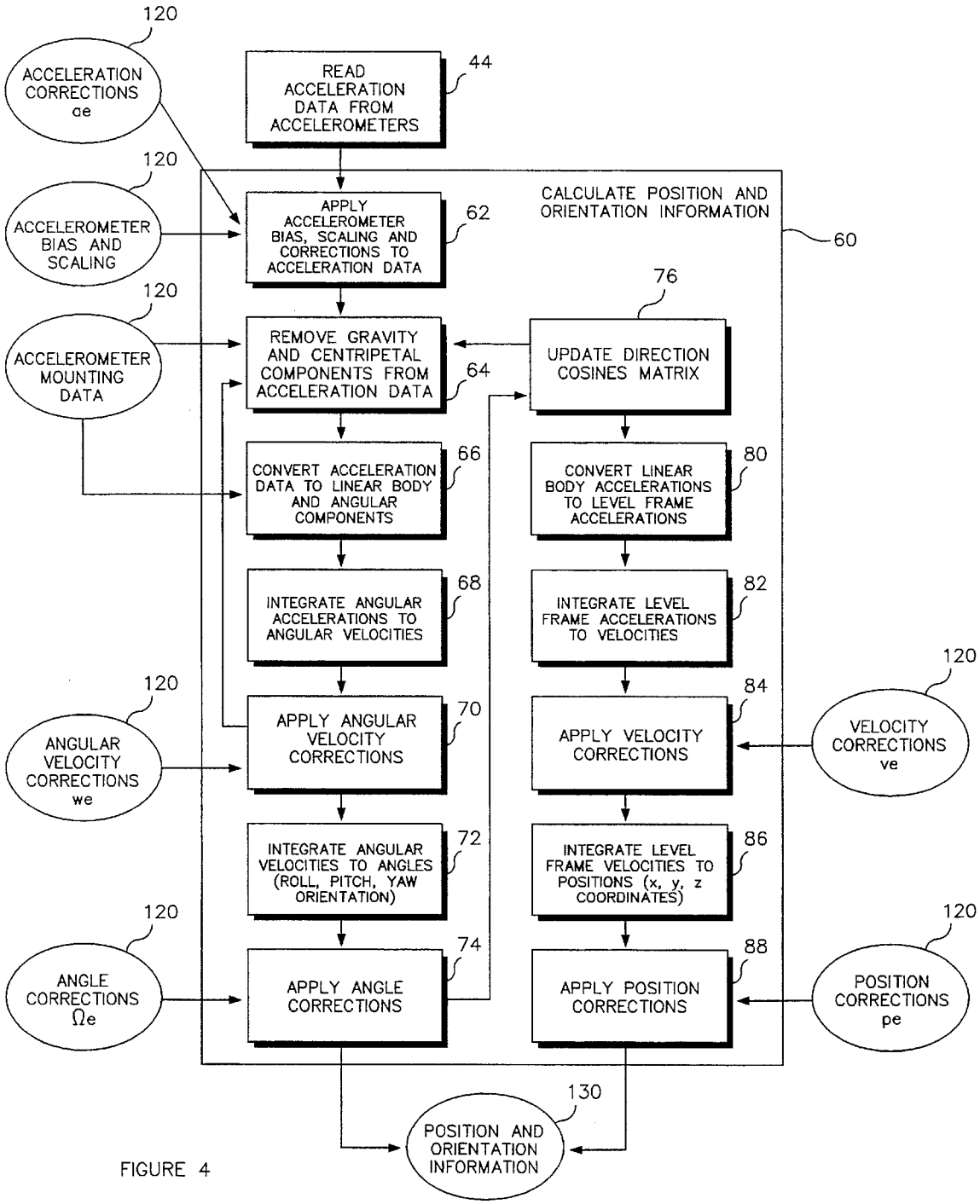
120
ACCELERATION CORRECTIONS ae
READ ACCELERATION DATA FROM ACCELEROMETERS
44
120
ACCELEROMETER BIAS AND SCALING
APPLY ACCELEROMETER BIAS, SCALING AND CORRECTIONS TO ACCELERATION DATA
62
CALCULATE POSITION AND ORIENTATION INFORMATION
60
120
ACCELEROMETER MOUNTING DATA
REMOVE GRAVITY AND CENTRIPETAL COMPONENTS FROM ACCELERATION DATA
64
76
UPDATE DIRECTION COSINES MATRIX
CONVERT ACCELERATION DATA TO LINEAR BODY AND ANGULAR COMPONENTS
66
CONVERT LINEAR BODY ACCELERATIONS TO LEVEL FRAME ACCELERATIONS
80
INTEGRATE ANGULAR ACCELERATIONS TO ANGULAR VELOCITIES
68
INTEGRATE LEVEL FRAME ACCELERATIONS TO VELOCITIES
82
120
ANGULAR VELOCITY CORRECTIONS we
APPLY ANGULAR VELOCITY CORRECTIONS
70
APPLY VELOCITY CORRECTIONS
84
120
VELOCITY CORRECTIONS ve
INTEGRATE ANGULAR VELOCITIES TO ANGLES (ROLL, PITCH, YAW ORIENTATION)
72
INTEGRATE LEVEL FRAME VELOCITIES TO POSITIONS (x, y, z COORDINATES)
86
120
ANGLE CORRECTIONS Ωe
APPLY ANGLE CORRECTIONS
74
APPLY POSITION CORRECTIONS
88
120
POSITION CORRECTIONS pe
130
POSITION AND ORIENTATION INFORMATION

FIGURE 4

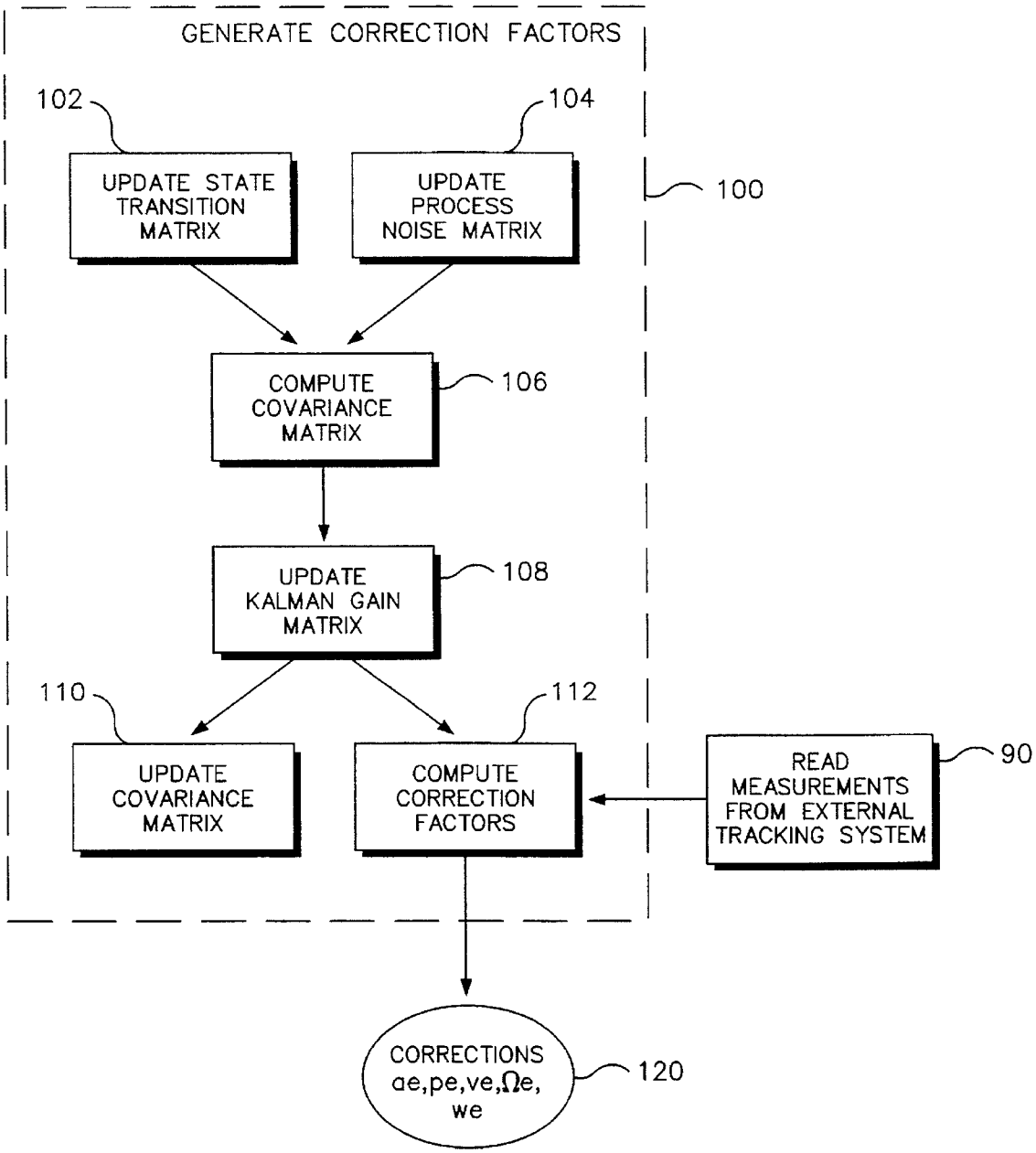
GENERATE CORRECTION FACTORS
102
104
UPDATE STATE TRANSITION MATRIX
UPDATE PROCESS NOISE MATRIX
100
COMPUTE COVARIANCE MATRIX
106
UPDATE KALMAN GAIN MATRIX
108
110
112
UPDATE COVARIANCE MATRIX
COMPUTE CORRECTION FACTORS
READ MEASUREMENTS FROM EXTERNAL TRACKING SYSTEM
90
CORRECTIONS ae,pe,ve,Ωe, we
120

FIGURE 5

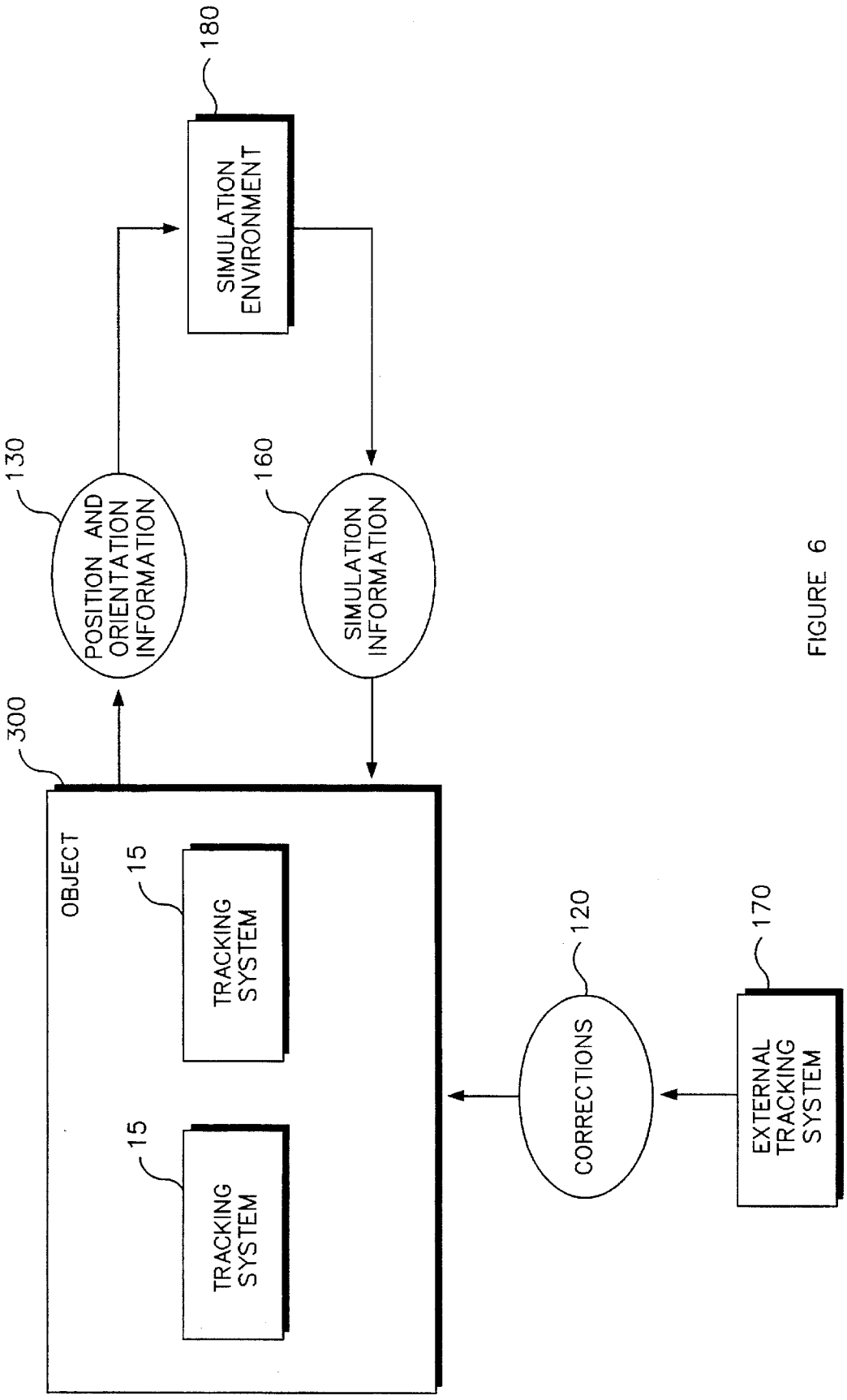
180
SIMULATION ENVIRONMENT
130
POSITION AND ORIENTATION INFORMATION
160
SIMULATION INFORMATION
300
OBJECT
15
TRACKING SYSTEM
15
TRACKING SYSTEM
120
CORRECTIONS
170
EXTERNAL TRACKING SYSTEM

FIGURE 6

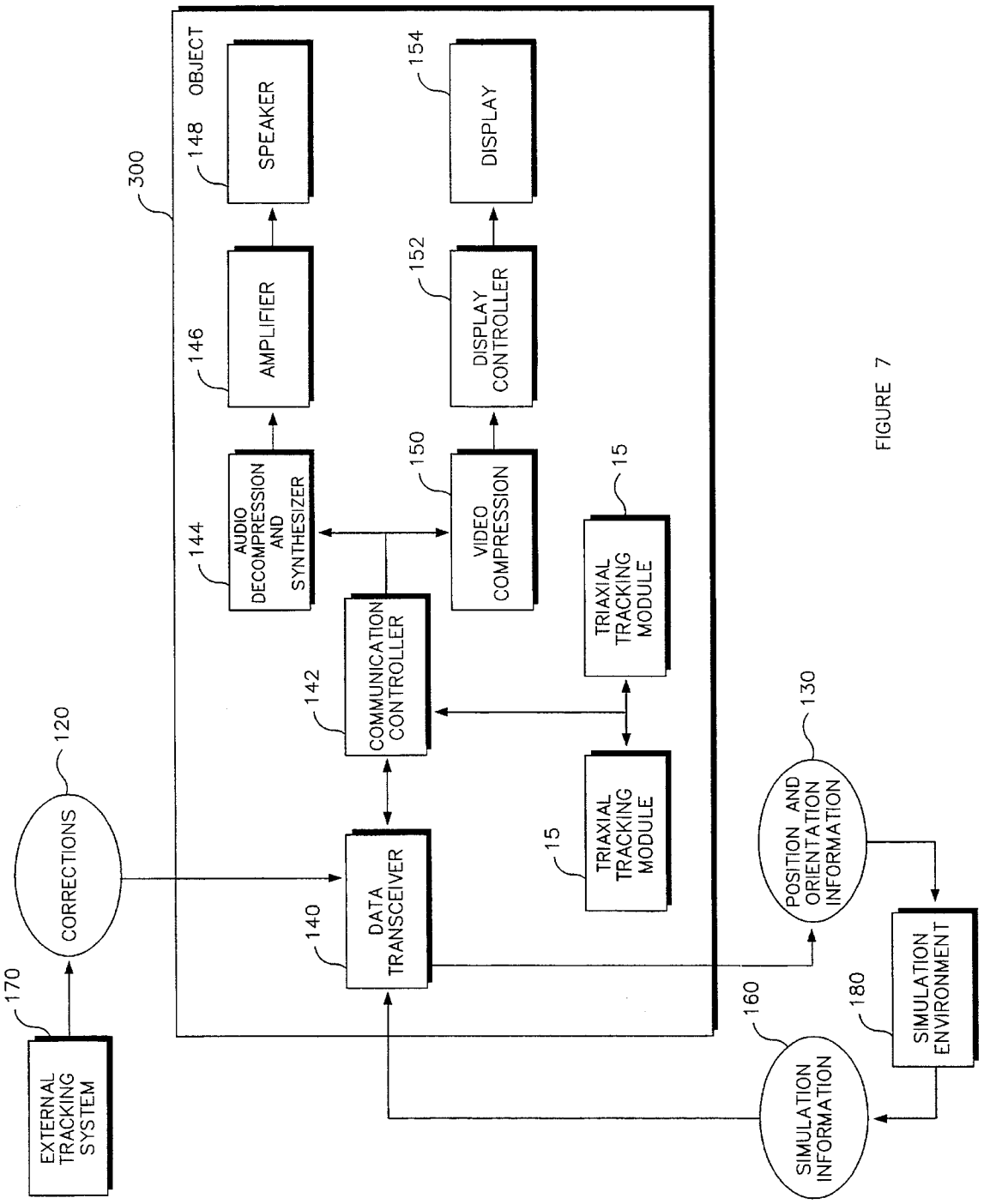
300
OBJECT
148
SPEAKER
146
AMPLIFIER
144
AUDIO DECOMPRESSION AND SYNTHESIZER
154
DISPLAY
152
DISPLAY CONTROLLER
150
VIDEO COMPRESSION
15
TRIAXIAL TRACKING MODULE
142
COMMUNICATION CONTROLLER
140
DATA TRANSCEIVER
15
TRIAXIAL TRACKING MODULE
120
CORRECTIONS
170
EXTERNAL TRACKING SYSTEM
130
POSITION AND ORIENTATION INFORMATION
160
SIMULATION INFORMATION
180
SIMULATION ENVIRONMENT

FIGURE 7

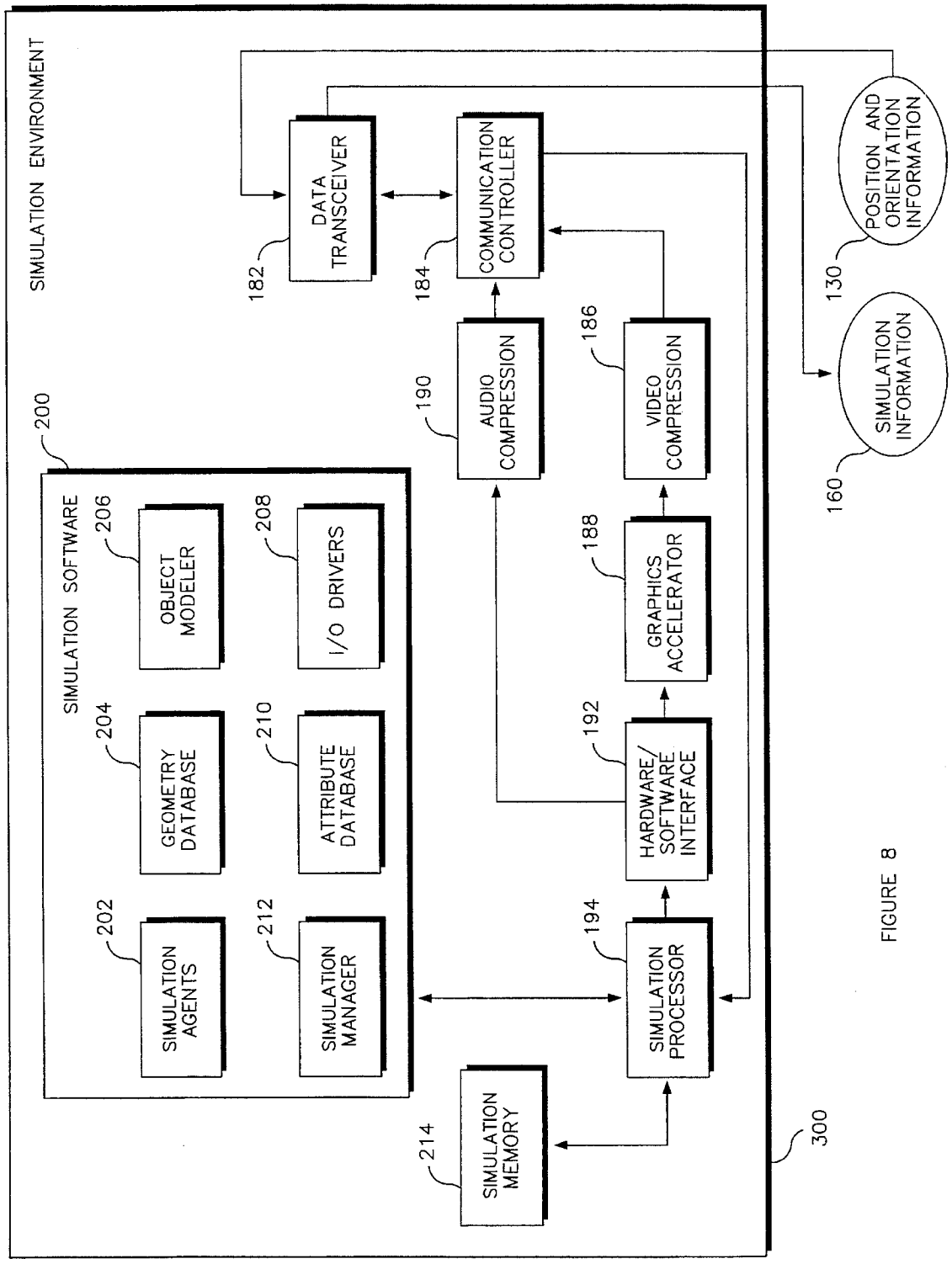
SIMULATION ENVIRONMENT
200
SIMULATION SOFTWARE
202
SIMULATION AGENTS
204
GEOMETRY DATABASE
206
OBJECT MODELER
208
I/O DRIVERS
210
ATTRIBUTE DATABASE
212
SIMULATION MANAGER
182
DATA TRANSCEIVER
184
COMMUNICATION CONTROLLER
190
AUDIO COMPRESSION
186
VIDEO COMPRESSION
188
GRAPHICS ACCELERATOR
192
HARDWARE/ SOFTWARE INTERFACE
194
SIMULATION PROCESSOR
214
SIMULATION MEMORY
300
130
POSITION AND ORIENTATION INFORMATION
160
SIMULATION INFORMATION

FIGURE 8

METHOD AND APPARATUS FOR DETERMINING POSITION AND ORIENTATION OF A MOVEABLE OBJECT USING ACCELEROMETERS

BACKGROUND OF THE INVENTION

1. Field of the Invention

The invention relates to tracking systems, particularly to such systems that determine position and orientation of an object in a limited volume using accelerometers.

2. Description of the Background Art

In specialized computer applications involving virtual reality or "immersive simulations" a computer or processing facility providing the simulation must continuously determine with a high degree of accuracy the position and orientation of a user (or part of the user e.g., head or hand) relative to a "virtual world" or simulated environment in which the user operates. The position and orientation data must be updated regularly to provide a realistic simulation. In addition, the data must be collected in a manner that does not interfere significantly with the user's natural movement. Thus, physical connection to a stationary object or heavy and/or bulky tracking instruments attached to the user are unsuitable. In order to be integrated easily with a head-mounted display (HMD), data glove or other peripheral device for use in a virtual reality application, a tracking system must be small and light weight.

A mechanical gantry containing sensors is used to track movement by physically connecting the user to a fixed object. However, this system is cumbersome, provides an unrealistic simulation due to interferences from the gantry, and requires significant installation effort.

A simplified radar or sonar system having a transmitter and a receiver mounted on the user is used to determine position of an object. However, this type of system is sensitive to noise in the environment, tends to have high frequency jitter between position measurements, is subject to interference from other objects in the simulation (e.g., a hand or other users), is generally bulky, requires multiple transmitters and receivers, and may be quite complex and expensive. Such systems are embodied in products available commercially from Polhemus, Logitech, and Ascension Technology.

Additionally, conventional navigation systems for navigating over large areas of land or airspace such as those for planes, cars, missiles, use devices such as gyroscopes that are not suitable for attachment to a human user because of their size and weight. In addition, these devices are typically designed to track over several hundred kilometers and several days, and are accurate only to several meters.

Two-dimensional navigation systems using angular accelerometers (a type of gyroscope), such as that used in *Barber* U.S. Pat. No. 5,245,537, are not suitable for virtual reality applications requiring three position and three orientation measurements for realistic simulation. The system described in *Barber* does not provide a highly accurate measurement (as required by virtual reality applications) because it contains no mechanism for correcting errors that are inherent in the system (e.g., bias, calibration errors, floating, and positional errors). Left uncorrected, these errors typically increase in size as a function of time of use and/or volume traversed, thereby resulting in a significant degradation in system performance. Moreover, angular accelerometers are not easily integrated into electronic componentry, thus the resulting system is generally greater in size and weight and

is not suitable for attachment to a human user. In addition, a much higher update rate (e.g., 50–300 Hz) than that used in *Barber* is required for realistic virtual reality simulations.

Thus, there is a need for a small, lightweight, highly integratable, navigational system that can be easily attached to a human user without significant interference to natural body movement. Furthermore, there is a need for a navigational system that is highly accurate over a long period of time and operates at a high update rate in order to provide a realistic virtual reality simulation. The prior art has failed to address these needs adequately.

SUMMARY OF THE INVENTION

The invention is a three-dimensional position and orientation tracking system that uses accelerometers to measure acceleration in the six-degrees of freedom (e.g., x, y, z position coordinates and roll, pitch, yaw orientation components) of a moveable object (e.g., a head-mounted display unit, or a wristband/data glove). Conventional accelerometers, as used herein, measure acceleration in one linear direction (e.g., x, y, z, or combination thereof, coordinate axis), but may report acceleration data as a nonlinear function of, for example, acceleration or time. Acceleration data on the moveable object is periodically (e.g., 50–300 Hz) received by a tracking processor. The tracking processor generates both position and orientation information on the object relative to a simulation environment as a function of the acceleration data. Accelerometers are easily integrated into electronic componentry (e.g., using silicon chip technology). Thus, the tracking system of the present invention can be embodied in a small, lightweight unit that is easily attached to a human user without significant interference to natural body movements.

In one embodiment, a simplified radar-based tracking system, which is disposed relative to the object, periodically (e.g., 1 Hz) provides additional tracking data on the object to the tracking processor. This data may be provided by, for example, infrared light and received by the tracking processor via an infrared sensor. The tracking processor uses the additional data to correct the position, orientation, and/or velocity information generated from the accelerometers, using a feedback or Kalman filter process. This correction feedback loop allows the invention to function accurately over a long period of time (e.g., several hours) without adjustment. Alternatively, if the user is to remain seated or confined to a limited volume during simulation, pre-defined position data from the simulation environment software specification (e.g., mean position of user and average variance) can be used in the correction feedback process.

The position and orientation information signals generated can be used, for example, in a simulation or virtual reality application. Position and orientation information is received by a simulation processor relative to the object (e.g., via infrared transceiver). The simulation processor modifies a simulation environment operating on the simulation processor as a function of the position and orientation information received. Modified simulation environment information (e.g., video, audio, tactile, and/or olfactory information) is transmitted back to the user (e.g., via infrared transceiver). Other possible applications of the invention include guidance systems for the blind, robotic guidance systems, human tracking systems (e.g., prisoners), object tracking systems (e.g., parcel package, and/or auto), and computer input devices for the handicapped (e.g., head or hand controlled input devices).

BRIEF DESCRIPTION OF THE DRAWINGS

FIG. **1** is a simplified block diagram illustrating the components used in the tracking system of the present invention.

FIG. **2** is graphical drawing showing one embodiment of the tracking system with placement of accelerometers **1–6** in FIG. **1** on two mounting points.

FIG. **2**A is a graphical drawing showing object **300** of FIG. **2** after movement.

FIG. **3** is a simplified flow chart depicting one embodiment of the tracking system of the present invention.

FIG. **4** is a flow chart depicting main loop **41** in FIG. **1**.

FIG. **5** is a flowchart depicting feedback loop **89** in FIG. **1**.

FIG. **6** is a simplified block diagram of a virtual reality invention using the tracking system of the present invention.

FIG. **7** is a block diagram of object **300** in FIG. **6**.

FIG. **8** is a block diagram of simulation environment **180** in FIG. **6**.

DESCRIPTION OF THE PREFERRED EMBODIMENT

FIG. **1** is a simplified block diagram illustrating the components used in the tracking system invention. Conventional accelerometers **1–6** measure acceleration in one linear direction (e.g., x, y, z, or combination thereof, coordinate direction), but may report acceleration data, for example, as a nonlinear function of time (e.g., v(t), where v is voltage) or acceleration. Accelerometers **1–6** are capable of measuring accelerations of at least ±2 G. This allows for 1 G due to gravity and 1 G of movement acceleration. In the preferred embodiment, accelerometers should be shock-protected or resistant so that they are not damaged if dropped. To ensure high accuracy, a high signal to noise ratio (SNR) is desirable—a lower bound of approximately 10^2 or 40 dB is preferred.

In one embodiment six accelerometers **1–6** are used to track six degrees of freedom of an object in three dimensions (e.g., x, y, z position coordinates and roll, pitch, yaw orientation components). More than six accelerometers can be used to obtain a greater degree of accuracy (e.g., by averaging or interpolation) and/or redundancy. Alternatively, three dual-axis or two triaxial accelerometers can be employed to track the six degrees of freedom of an object in three dimensions. Fewer accelerometers (e.g., four) could be used to track the object, for example, in a two-dimensional space or one-dimensional space (e.g., two accelerometers). Groups or clusters of accelerometers can also be used to track a plurality of objects. For example, the tracking invention could be implemented on an HMD and two data gloves to track head and hand movement of a user. More tracking systems can be used along the arm to track elbow and shoulder movement. Tracking systems on each finger could also be used to track finger movement. Similarly, two head-mounted display (HMD) units with six accelerometers each could be used to track the 3-dimensional position and orientation of two interactive users in a virtual reality environment.

Accelerometers **1–6** are conventional accelerometers such as the ADXL-2 manufactured by Analog Devices Corp. of Boston, Mass. Due to the nature of human movement (typically frequency components are between 0–50 Hz), for example, there is generally little information in the high frequency range, and this information should be removed to reduce noise. Accordingly, in the preferred embodiment, accelerometers are bandlimited, i.e., the highest frequency from accelerometers **1–6** are limited to, for example, 50–300 Hz. This bandwidth can be achieved by coupling accelerometers **1–6** to low pass filters (LPFs) **7–12**, respectively, or by using low bandwidth accelerometers. In a preferred embodiment, accelerometers **1–6** are small and easily integrated with other electronic components, e.g., small micro-machined accelerometers (bulk or surface micro-machined).

Output from LPFs **7–12** are used as inputs to multiplexer **20** such as the ADG508A available commercially from Analog Devices. Analog to digital (A/D) converter **30**, such as the AD1380 available commercially from Analog Devices, is used to convert the analog acceleration signal from LPFs **7–12** to a digital signal. Some accelerometers can provide digital data directly (see e.g., ARPA grant #BAA93-06 to University of California at Berkeley and Analog Devices) thus A/D converter **30** is not necessary. Alternatively, a voltage-to-frequency converter and a frequency counter circuit could be used to obtain a digital value. The components of the present invention comprising accelerometers **1–6**, LPF **7–12**, multiplexer **20**, and A/D converter **30** are all highly integratable (unlike gyroscopes, angular accelerometers, and other tracking systems). Thus, according to the present invention, for example, accelerometers **1–6** (or subset thereof), multiplexer **20**, A/D converter **30**, and tracking processor **40** could all be co-located on a single integrated computer chip—the result being a small light-weight navigational system suitable for attachment to human users using a virtual reality application.

Output from A/D converter **30** is acceleration data **35**. Acceleration data **35** may be reported, for example, as a nonlinear function of time (e.g., v(t) where v is volts). Acceleration data **35** is input to tracking processor **40**. Tracking processor **40** can be, for example, a standard computer microprocessor such as an INTEL 486, Motorola 68000, or Pentium-based microprocessor. Tracking processor **40** is discussed in further detail with reference to FIGS. **3–5** below. Memory unit **37** is coupled to tracking processor **40** and is used for storing program instruction steps and storing data for execution by tracking processor **40**. Memory unit **37** is a conventional computer memory unit such as a magnetic hard disk storage unit or random access memory (RAM) on a chip. Output from tracking processor **40** is position and orientation information **130**.

In one embodiment, position and orientation information **130** is transmitted in a data signal consisting of six elements-three position elements (e.g., x, y, z) and three orientation elements (e.g., roll, pitch, yaw). Each element is two bytes long. Each value or element is in twos complement format, thus the decimal values −32,768 to 32,767 are covered. Measurements are the decimal value divided by 100. Thus, measurements from −327.68 to 327.67 (e.g., degrees, cm, inches, feet or other angle or linear measurements) can be transmitted. Information **130** is transmitted in a standard serial interface of three lines—transmit, receive, and ground—standard 8 bit words, no parity, and 1 stop bit. A mode of operation can be specified as follows:

R—request mode (default). Position and orientation is transmitted upon request.

F—free running mode. Position and orientation is transmitted as calculated.

M—mode change. Informs tracker that mode in which position and orientation is transmitted (R or F) will change.

G—get data. Tracker will transmit position and orientation information **130**.

H—halt. Turns off tracking system.

C—calibrate. Runs or reruns the initialization routine **48**. Alternatively, a file can be created with records of the same format described above.

In FIG. **2**, two accelerometer mounting points **301** and **302** are located on object **300** (e.g., two locations on a head-mounted display (HMD) unit, or two locations on the wrist of a data glove). Object **300** may be, for example, a head-mounted display unit, a wristband/data glove, or other similar device attached to a user to monitor the user's movement. In this example, each mounting point **301**, **302** contains three accelerometers (e.g., accelerometers **1–3** and **4–6** respectively). Vectors r_1–r_6 (r_i) are the vectors from the origin of object **300** (e.g., head of user) to each accelerometer **1–6**, respectively, measured in body frame coordinates x_B, Y_B, z_B (e.g., coordinates in reference to object **300**). In one embodiment, accelerometers **1–6**, and thus vectors r_1–r_6, are fixed when accelerometers **1–6** are mounted. However, the location of accelerometers **1–6** could be altered during the use of the tracking system and vectors r_1–r_6 updated accordingly. As shown in FIG. **2**, $r_1=r_2=r_3$ and $r_4=r_5=r_6$ because there are only two mounting points **301**, **302**.

Vectors u_1–u_6 (u_i) represent the sensitive direction of each accelerometer **1–6**, respectively, measured in body frame coordinates x_B, Y_B, z_B. Similarly, sensitive direction vectors u_1–u_6 are generally fixed when accelerometers **1–6** are mounted but could be altered and updated accordingly.

Position and orientation information **130** is reported in a fixed, or level frame reference defined by x_L, Y_L, z_L. The coordinate system used in a virtual reality program or computer simulation environment **180**, for example, is a level frame reference. After movement of object **300**, body frame references are changed as shown in FIG. **2**A.

Accelerometer mounting information **46** (FIG. **3**) comprises the information in the matrix J (described in the program flow below) defined by:

$$J = inv \begin{vmatrix} u_1^T & (r_1 \times u_1)^T \\ u_2^T & (r_2 \times u_2)^T \\ \vdots & \vdots \\ \vdots & \vdots \\ \vdots & \vdots \\ u_6^T & (r_6 \times u_6)^T \end{vmatrix}$$

The matrix J resolves the net linear accelerations into linear body and angular components. Accelerometers **1–6** must be mounted (e.g., **301**, **302**) such that the matrix J is not singular. For example, accelerometers **1–6** cannot all be placed in one position r_i. Similarly, u_i, representing the acceleration sensitive directions, must be non-zero for each acceleration direction x_B, Y_B, z_B. (e.g., the x_B component of every u_i cannot always be zero). In one embodiment, u_1, u_2, and u_3 are orthogonal and u_4, u_5, and u_6 are orthogonal.

FIG. **3** shows a simplified flow chart of tracking system **15** as implemented on tracking processor **40**. Accelerometer initialization and calibration **48** is initiated prior to each system use to correct for the bias and scaling factors of the accelerometers due to such factors as time, temperature, mechanical jarring and the like. Accelerometers **1–6** are initialized **48** by loading the values of the accelerometer biases which are pre-specified at the factory or obtained from accelerometer specifications. Calibration **48** of accelerometers **1–6** is accomplished by running tracking system **15** while the object to be tracked **300** (e.g., head-mounted display (HMD) on a user) remains stationary. Position and orientation **130** are calculated according to the present invention as specified herein. Feedback filter loop **89** (discussed below, see also *Digital and Kalman Filtering* by S. M. Bozic, John Wiley and Sons, N.Y.) compares calculated position and/or orientation measurements **130** with the known position and/or orientation measurement (known to be stationary) and uses discrepancies between the two measurements to solve for bias and scaling factors **50** for each accelerometer **1–6**. Tracking system **15** is operated such that main loop **41** is executed multiple times (approximately 15–20) for a successful calibration **48**. Total calibration time is dependent on tracking processor **40** speed. In one embodiment, tracking system **15** alerts the user when calibration **48** is complete. Notification is through, for example, a small LED on an HMD, visual notification on a display, or any other suitable means. For more accurate initial bias and scale factors **50**, calibration **48** is repeated with object **300** in several different orientations. Initialization **48** also includes resetting correction factors **120** (P_e, v_e, Ωe, we) to zero or their reference values. Reference values may be dictated, for example, by simulation environment **180**.

In main loop **41** tracking processor **40** reads **44** acceleration data **35** from accelerometers **1–6** and calculates **60** position and orientation information **130**. Calculation **60** is discussed in more detail with reference to FIG. **4** below. In operation, main loop **41** is repeated at 50–300 Hz or faster depending on hardware capability (e.g., capability of tracking processor **40** or other components in FIG. **1**). A fast loop rate **41** ensures that simulation environment **180** is updated with current position and orientation information **130**.

Feedback loop **89** (also known as a Kalman filter) comprises reading tracking measurements **90** (e.g., position, orientation, and/or velocity) from external tracking system **170** (FIGS. **6**, **7**) disposed relative to object **300** and generating **100** correction factors **120**. Generation **100** of the correction factors **120** is described in more detail with reference to FIG. **5** below. Correction factors **120** are used in calculation **60** of position and orientation information **130**.

If the volume in which object **300** moves is relatively large compared to the size of object (e.g., tracking an HMD in a 5×5 meter room) or the system is used for long periods of time (e.g., over 15 minutes), then external measurements **90** from, for example, external tracking system **170** are used for feedback. External tracking system **170** is a conventional tracking system using, for example, radar, sonar, infrared, optical, acoustic/ultrasonic, or magnetic tracking technology. External tracking data including position, orientation, and/or velocity measurements **90** are provided in the form of a 1- to 2-dimensional update or a full 3-dimensional, 6 degree of freedom, update. Basically, feedback loop **89** will use any additional tracking data about object **300** to correct position and orientation information **130**—more tracking data will provide a better correction.

Alternatively, if object **300** (e.g., HMD) is confined to a small volume (e.g., seated), then certain "software specification" information (not shown) in simulation environment **180** can be used in place of measurements **90** as input to generation **100** of correction factors **120**. For example, the mean position and the estimated variance of object **300** in a limited volume can be used for measurements **90**. The variance can be constant or change over time. The variance reflects the uncertainty or size of the volume the object **300**, or user, is confined.

After incorporating correction factors **120** from feedback filter loop **89**, the output of calculation **60** is position and orientation information **130**. Position and orientation information **130** is used, for example, in a virtual reality program or simulation environment **180**.

In FIG. **4**, tracking processor **40** reads **44** acceleration data **35** from each accelerometer **1–6**. Accelerometer bias and scaling factors **50** are applied **62** to acceleration data **44**. Acceleration corrections **120** from feedback loop **89** are also applied **62** to acceleration data **44**. Gravity and centripetal components of acceleration are also removed **64** from corrected acceleration data **62**. Step **64** involves information from the prior output of the direction cosine matrix **76**, mounting data (r_i and u_i) **46**, and angular velocities **70**. Modified acceleration data **64** is converted to linear body and angular components **66**. (There is no designation of body, level, or reference frame for angular accelerations, they simply measure the angle between two axes.) Angular accelerations **66** are integrated to angular velocities **68**. Angular velocity corrections **120** from feedback loop **89** are applied **70** to angular velocity data **68**. Corrected angular velocities **70** are integrated to angles or orientation **72**, for example, roll, pitch, and yaw. Angular corrections **120** from feedback loop **89** are applied **74** to corrected angle data **72**. Thus, orientation information **130** is produced. Direction cosine matrix is updated **46** using a conventional direction cosine update routine. (See, for example, Paul G. Savage, *Strapdown Systems Algorithms*, in *Advances in Strapdown Inertial Systems*, NATO Advisory Group for Aerospace Research and Development Lecture Series #133, 1984, pp. 3-1 to 3-30).

Linear body accelerations **66** are converted to level frame or reference frame (e.g., simulation environment coordinates) accelerations **80**. Level frame accelerations **80** are integrated to level frame velocities **82**. Velocity corrections **120** from feedback loop **89** are applied **84** to level frame velocities **82**. Corrected level frame velocities **84** are integrated to positions **86**. Position corrections **120** from feedback loop **89** are applied **88** to positions **86**. Thus, position information **130** is produced.

In a preferred embodiment, orientation is calculated (steps **68, 70, 72, 74, 130**) and direction cosines matrix is updated **76** before position is calculated (steps **80, 82, 84, 96, 88, 130**). This control flow has the advantage that direction cosines matrix **76** is more current and accurate for the position calculation steps. Alternatively, orientation calculation (steps **68, 70, 72, 74, 130**) and position calculation (steps **80, 82, 84, 96, 88, 130**) can be processed in parallel. However, direction cosines matrix **76** will reflect data from the previous loop **41**, thus position calculation **130** may be less accurate.

In a preferred embodiment, calculation **60** also performs an estimation of position and orientation **130** one "frame delay" into the future. The reason for this predictive step, for example, is that simulation environment **180** will take some time, t, to utilize position and orientation information **130** and modify virtual reality program or simulation environment for presentation to the user (e.g., draw the next frame in a video application). Delay time, t, is dependent upon the frame update rate used in simulation environment **180** (e.g., 30 frames per second). Hence, position and orientation information **130** should account for delay time, t. The estimated angle one frame delay into the future is corrected angle **74** plus delay time t multiplied by corrected angular velocity **70**. This is sometimes called straight line or linear interpolation. Similarly, estimated position one frame delay into the future is corrected position **88** plus delay time t multiplied by corrected velocity **84**. Thus, predictive position and orientation information can also be generated **130**. Delay time, t, is highly dependent on the simulation software **180**, thus the delay time parameter should be loaded into the system on every use.

It is possible for simulation software **180** to estimate future position and orientation. Generally, the difference between the last two position measurements **130** is used to obtain a velocity. However, differencing or differentiating are a processes susceptible to noise and lead to a poor estimation. The invented system provides a simple and efficient method for providing estimation **130**.

Referring now to FIG. **5**, state transition matrix **102** and process noise matrix **104** are updated (see use of these matrices in program flow below). State transition matrix **102**, F, is a function of the state of the system represented as a matrix, X, at the nth computer cycle and the (n+1)th computer cycle such that X(n+1)=F(n) X(n). Process noise matrix **104**, Q, is the expectation of the dot product of the vectors that represent the noise of each element in the state vector of the system. In the simplest case Q is a constant diagonal matrix—each element of the diagonal representing the variance of that element. However, if the sensors are modeled in a time dependent manner, for example in a Markov process, then Q will vary with time. These conventional matrices are discussed, for example, in *Applied Optimal Estimation* by the Technical Staff of The Analytic Sciences Corporation, ed. Arthur Gelb, MIT Press, 1974, pp. 102–156.

Covariance matrix is computed **106** as a function of state transition matrix **102** and process noise matrix **104**. Feedback or Kalman gain matrix is updated **108** as a function of covariance matrix **106**. Correction factors **120** (P_e, v_e, Ωe, we) are computed **112** as a function of Kalman gain matrix **108** and measurements **90** from external tracking system **170** (or software specification data). External tracking system **170** is a conventional tracking system using, for example, radar, sonar, infrared, optical, acoustic/ultrasonic, or magnetic tracking technology. External position, orientation, and/or velocity measurements **90** are provided in the form of a 1- to 2- dimensional update or a full 3-dimensional, 6 degree of freedom update. Covariance matrix is updated **102** as a function of Kalman gain matrix **108**.

Referring now to FIG. **6**, one embodiment of a virtual reality invention is shown. Mounted on object **300** is tracking module(s) **15**. In one embodiment, tracking system **15** is two or more tracking modules. For example, two triaxial tracking module **15** can be mounted on object **300** (e.g., an HMD) according to the mounting diagram shown in FIG. **2**. Position and orientation information **130** is generated according to the tracking invention (see FIGS. **3–5**) and is transmitted to simulation environment **180**. Simulation environment **180** outputs simulation information **160** such as video, audio, tactile, force, or olfactory signals, possibly modified as a function of position and orientation information **130** received. Simulation information **160** is received by

object **300**, or other display device, and is used, for example, to display video or play audio for the user. External tracking system **170** relative to object **300** provides corrective or feedback data **120** to tracking system **15**. Correction data **120** is used to modify position and orientation information **130** as disclosed above with reference to FIGS. **3–5**.

FIG. **7**, is one embodiment of object **300** (e.g., an HMD unit) shown in FIG. **6**. Data transceiver or sensor **140** is, for example, an infrared, low frequency radar, optical, acoustic (ultrasonic), or magnetic sensor. In a preferred embodiment, data transceiver **140** is an infrared (IR) or other wireless transceiver capable of transmitting up to 4 Mb/s such as the Spectrix SpectrixLite data transceiver. A wireless transceiver is less cumbersome and does not interfere significantly with the user's movement. Generally, external tracking system **170** need only provide a 1 to 2 dimension position update **120** at a low frequency (e.g., 1 Hz) in order for tracking systems **15** on object **300** to function with sufficient accuracy. Thus, if sensor **140** is capable of operating at a higher frequency (e.g., 50–300 Hz) sensor **140** is unused for a large portion of time. During this free time, sensor **140** can be used for another purpose. For example, if sensor **140** is an IR data transceiver operating at 50–300 Hz, transceiver **140** can be used to transmit and receive simulation information **160** from simulation environment **180**.

Data transceiver **140** is coupled to communication controller **142**. Communication controller **142** is, for example, a processor such as the DSP 2100 by Analog Devices that can manage the organization and timing of, for example, three data streams, namely, (1) compressed audio information **160** received from simulation environment **180**, (2) compressed video information **160** received from simulation environment **180**, and (3) position and orientation information **130** received from tracking systems **15**. Communication controller **142** ensures that each of the signals is properly received and transmitted from data transceiver **140**. Communication controller **142** may also convert serial data from transceiver **140** to the parallel format of, for example, modules **144**, **150**, and **15** which it is coupled to.

Audio decompression and synthesizer **144** decompresses and synthesizes analog audio signals **160** as commonly known in the art. Such a device is embodied in, for example, Analog Device's AD 1848. Audio signals of **144** (e.g., left and right stereo channel signals) are amplified by amplifier **146**. The amplified audio signals **146** drive a speaker **148** or speakers (e.g., left and right headphone speakers) for the user. A plethora of conventional audio amplifiers and speakers are available and suitable for this virtual reality invention.

Compressed video stream **160** is decompressed **150** using, for example, the motion pictures expert group (MPEG) standard. In one embodiment, compressed video **160** arrives at approximately 2 Mb/s and is converted to 30 frames per second full motion video in NTSC (National Television Standards Committee) format. The Zoran MPEG Image Compression Module Reference Design, is one embodiment of module **150**. Output of **150** connects to display controller **152** which manages, for example a color LCD display or displays (e.g., left and right LCD displays) **154**. Displays **154** and their associated optics provide, for example, a high-resolution bi-focal color display. Display controller **152**, displays and optics **154** are available, for example, in an integrated unit by Kaiser ElectroOptic VIM (virtual immersion module). A power source (not shown) provides DC power for the electronics shown in FIG. **7**.

FIG. **8** is one embodiment of simulation environment, system, or module **180** shown in FIG. **6**. In one embodiment, simulation software **200** may comprise several software components that interact with each other and with external hardware. Geometry database **204** contains information on various simulation objects that appear in the simulation (e.g., cars, people, spaceships). Attributes of the various simulation objects are stored in attribute database **210**. Attributes **210** describe the kind of interactions each simulation object can have within the environment. Attributes may be, for example, visual, motion, audio, force, and/or smell. For example, an audio attribute may be the audio signal **210** a simulated car should generate when the car is running. Object modeler **206** assists in rendering simulation objects in a 3-dimensional view. Input/output (I/O) drivers **208** interface with external hardware, for example, audio, visual, tactile, force, or olfactory units. I/O drivers may also monitor and/or query tracking system **15** for the position and orientation of object **300**. Simulation agents **202** provide the simulation with a story line. Simulation agents **202** define the reactions or steps that various objects should take in response to user actions (e.g., via the object **300** being tracked). For example, a simulation agent **202** would tell a simulated car to stop running if the user provides an instruction to turn the car off (e.g., by means of a joystick, data glove, or other input). Simulation manager **212** coordinates the activities and actions of the components of simulation software **200**.

Simulation processor **194**, which may be connected to other processors **194**, executes simulation software **200**. Simulation processor **194** can be a standard computer microprocessor such as an INTEL 486 or Pentium-based microprocessor. Simulation memory unit **214** is coupled to simulation processor **194** and is used for storing program instruction steps and storing data for execution by tracking processor **194**. Simulation memory unit **214** is a conventional computer memory unit such as a magnetic hard disk storage unit or random access memory (RAM) on a chip. Simulation processor **194** receives position and orientation information **130** from object **300** (e.g., HMD) via data transceiver **182** and communication controller **184**. Simulation processor sends instructions, data, or signals to hardware/software interface **192** (or directly sends instructions to hardware devices). These signals may be affected or modified as a function of position and orientation information **130**.

Coupled to simulation processor **194** is hardware/software interface **192** which interacts with various simulation hardware devices. For example, audio data or signals may be compressed **190** before being routed to communication controller **184** and transmitted via data transceiver **182** to an audio device or object **300** (e.g., HMD). Similarly, video signals are sent to graphics accelerator **188** and compressed **186** (e.g., MPEG compression) before being routed to communication controller **184** and transmitted via data transceiver **182** to a display device or object **300** (e.g., HMD). In this example, communication controller **184** manages the organization and timing of three data streams, namely, (1) compressed audio received from **190** to transmit to object **300**, (2) compressed video received from **186** to transmit to object **300**, and (3) position and orientation information received from object **300** in conjunction with tracking systems **15** via data transceiver **182**.

Minimally, simulation environment, system, or module **180** comprises simulation software **200**, simulation processor **194**, and simulation memory **214**.

The following tables of constants and variables and a high-level system flow further describe one embodiment of the invention. The example herein is not intended to limit the scope of the claims in any way.

TABLE 1

CONSTANTS - MAIN LOOP

Symbol	Dimension	Description
T	Scalar	Update period for main loop. 0.01 seconds
T_D	Scalar	Update rate of simulation software. Typ. 1/30 sec.
B	N/A	Body or helmet coordinate frame
L	N/A	Room or chair coordinate frame. Also referred to as Level or Reference frame.
i	Scalar	1,2, . . . , 6 accelerometer number . . . see schematic
J	6 × 6	Matrix that separates corrected accelerometer readings into linear and angular components. Elements value defined from locations and directions accelerometers are mounted.
r(i)	3 × 1	Radius vector that points from origin of body frame to sensor. Measured in body frame coordinates
u(i)	3 × 1	Unit vector in direction of sensitive axis of 'i'th accelerometer. Measured in body frame coordinates
T	N/A	Transpose operator. Converts column vector to row vector
sf(i)	Scalar	Scale factor. Value converts the voltage read from the A/D converter into acceleration in m/s^2

TABLE 2

VARIABLES - MAIN LOOP

Each variable takes on a new value during the main loop cycles (i.e., the value of each variable is a function of 'n' the main-loop iterator)

Symbol	Dimension	Description
n	Scalar	Iteration number of the main loop.
a(i)	Scalar	Acceleration reading from the 'i'-th sensor
v(i)	Scalar	Voltage reading from A/D converter
a_B	3 × 1	Body frame linear acceleration vector - describes the linear acceleration of the body frame measured in body frame coordinates
a_L	3 × 1	Linear acceleration of body frame measured in level / reference frame coordinates
v_L	3 × 1	Velocity of the body frame measured in level / reference frame coordinates
p_L	3 × 1	Position of origin of body frame in level /reference frame coordinates
dw	3 × 1	Angular acceleration of the body frame. Note that angular acceleration, velocity, and angle are not referenced to a body or level frame. They measure the angle between the axis of the two frames.
w	3 × 1	Angular velocity of the body or the reference values in the body frame and level frame axes; often referred to as Euler angles or (Roll, Pitch, Yaw)
C_{LB}	3 × 3	Matrix of Direction Cosines. Relates quantities measured in the body frame to the level frame
ae	6 × 1	Raw acceleration corrections from last Kalman filter update. Applied directly to acceleration readings
ve	3 × 1	Linear velocity corrections from last Kalman filter update
pe	3 × 1	Position corrections from last Kalman filter update
we	3 × 1	Angular velocity corrections from last Kalman filter update
Ωe	3 × 1	Angle corrections from last Kalman filter update

TABLE 3

CONSTANTS - FEEDBACK FILTER LOOP

Symbol	Dimension	Description
T_K	Scalar	Update Rate of Kalman Filter - 1 second
H	1 × 18 or 3 × 18 or 6 × 18	Observation/Measurement matrix. Each diagonal element is either a 1 or 0. The elements on the diagonal correspond to states in state vector. The value is 1 if that state is measured during the Kalman filter update.
R	3 × 3	Variance of measurement. In this context measurement refers to the external data (either external tracker data or constraint information). The matrix is 3 × 3 if the external measurements consists of x,y,z. The variance may also be modeled in a time dependent manner.
−	N/A	Indicates that this is the value of variable before measurement comparison in Kalman Filter Loop
+	N/A	Indicates that this is the value of variable after measurement comparison in Kalman Filter Loop

TABLE 4

VARIABLES - FEEDBACK LOOP

These variables take on new values during each Kalman filter iteration. Some variables change their value twice during the loop. Kalman filter iterations are counted by the variable 'k'.

Symbol	Dimension	Description
X	18 × 1	State Vector. Consists of the following components from the main loop (p_L, v_L, Ω, w, 1(1), . . . , a(6))
P	18 × 18	Covariance Matrix
F	18 × 18	State Transition Matrix. The values describe how error propagates from one variable in the main loop to another
Q	18 × 18	Process noise matrix.
K	18 × 3	Kalman filter gain matrix. These gains control the values of the corrections ae, ve, pe, we, Ωe. The matrix is 18 × 3 if the measurements consist of x,y,z update.

System Flow - MAIN LOOP

```
/* increase update counter */
n = n + 1

/*read accelerometer data */
for i = 1 to 6
    /* get new data from A/D converter */
    read v(i)
    /* convert voltage to accleration */
    a(i) = sf(i)v(i)
    /* apply accelerometer bias correction from Kalman Filter */
    a(i) = a(i) − ae(i,k)
    /* remove gravity and centripetal components */
    /* cross indicates vector cross product */
    a(i) = a(i) − u(i)^T C_LB(n−1) g_L − u(i)^T(cross(w,cross(w,r(i))))
end

/* convert net accelerations into linear body and angular components */
```

$$\begin{bmatrix} a_B \\ w \end{bmatrix} = (J^*) \begin{bmatrix} a(1) \\ \cdot \\ \cdot \\ \cdot \\ a(6) \end{bmatrix}$$

```
/* NOTE all integrations use Trapezoidal Approximation */
/* integrate angular accelerations to angular velocity */
w(n) = 0.5 T * (dw(n) + dw(n−1)) + w(n−1)
/* apply correction from Kalman filter */
```

-continued

System Flow - MAIN LOOP

$w(n) = w(n) - we(k)$

/* integrate angular velocities to angles */
$\Omega(n) = 0.5T*(w(n) + w(n-1)) + \Omega(n-1)$
/* apply correction from Kalman filter */
$\Omega(n) = \Omega(n) - \Omega e(k)$

/* update directions cosine matrix using any one of several conventional algorithms for updating direction Cosine matrices. See reference above. Some algorithms may combine this step with integration of angular velocity to angle.
*/
$C_{LB}(n)$ . . . function of $\Omega(n)$, $C_{LB}(n-1)$

/* convert body frame accelerations to level /reference frame acceleration */
$a_L(n) = C_{LB}(n)a_B(n)$

/* integrate level frame accelerations velocities */
$v_L(n) = 0.5T*(a_L(n) + a_L(n-1)) + v_L(n-1)$
/* apply correction from Kalman filter */
$v_L(n) = v_L(n) - ve(k)$

/* integrate level frame velocities to position */
$p_L(n) = 0.5T*(v_L(n) + v_L(n-1)) + p_L(n-1)$
/* apply correction from Kalman filter */
$p_L(n) = p_L(n) - pe(k , j)$

/* transmit updated position and orientation using format defined in claim-x */
Transmit (p_L, Ω)

/* Optional: the position and orientation may be reported for one "frame delay" into the future. Whether or not to do this will depend on the simulation software. Currently simulation handles this process internally. However the invented tracking system provides a natural way to perform extrapolation */
Transmit ($p_L + v_L*T_D$, $\Omega + w * T_D$)

System Flow - FEEDBACK LOOP

/* Update State Transition Matrix */
Compute $F(k-1,k)$

/* Update Process Noise Matrix */
Compute $Q(k-1,k)$

/* Compute Covariance Matrix (before measurement) */
$P^-(k) = F(k-1,k)*P^+(k-1)*F(k-1,k)^T + Q(k-1,k)$

/* Update Kalman Gain Matrix */
$K(k) = P^+(k-1)H^T / [HP^+(k-1)H^T + R]$

/* Compute Correction factors */

$$\begin{bmatrix} pe \\ ve \\ \Omega e \\ we \\ ae \end{bmatrix} = -K(k) * [\text{Measurements} - \text{Estimated State}]$$

/*"Measurements" refer to data from an external source, and Estimated State is position and orientation information 80. When the system uses constraints defined in software the measurements are zero for position and linear velocity. The diagonal elements of R are very large, typically $(0.3\ m)^2 = 0.09\ m^2$ for position, and $(0.1\ m/s)^2 = 0.01\ m^2/s^2$ for linear velocity.
The observation matrix H is set so that all diagonal elements are zeros except position and linear velocity, (and in some cases angle) which are set to 1.*/

/* Update Covariance Matrix Using measurement */
$P^+(k) = P^-(k) - K(k)(P^-(k)H^T)^T$

We claim:

1. A method for generating computer simulation signals in response to the orientation of a moveable object from a plurality of electronic linear accelerometers mounted on the moveable object in cooperative operation with an external tracking system disposed relative to the moveable object, the method comprising the steps of:

processing linear acceleration signals generated from the plurality of electronic linear accelerometers mounted on the moveable object;

generating orientation signals associated with the movement of the object in three degrees of freedom as a function of the linear acceleration signals;

generating computer simulation signals in response to the orientation signals;

processing tracking data signals associated with the object generated from the external tracking system disposed relative to the moveable object; and

modifying the orientation signals as a function of the tracking data signals.

2. The method of claim **1** wherein the external tracking system is a radar tracking system.

3. The method of claim **1** wherein the tracking data signals from the external tracking system include orientation information associated with the moveable object.

4. The method of claim **1** wherein the orientation information includes a mean orientation signal and an orientation variance signal associated with the moveable object.

5. The method of claim **4** wherein the mean orientation signal and the orientation variance signal are pre-determined by a virtual reality environment.

6. The method of claim **1** wherein the modifying step comprises the steps of:

generating correction values associated with the orientation signals as a function of the tracking data signals generated from the external tracking system; and

modifying the orientation signals as a function of the correction values.

7. (Amended) The method of claim **1** wherein the steps of processing acceleration signals, generating orientation signals, processing tracking data signals generated from the external tracking system, and modifying the orientation signals are repeated.

8. The method of claim **1** wherein the external tracking system is a magnetic tracking system.

9. The method of claim **1** wherein the external tracking system is an optical tracking system.

10. The method of claim **1** wherein the external tracking system is an ultrasonic tracking system.

11. A system for generating computer simulation signals in response to the orientation of a moveable object from a plurality of electronic linear accelerometers mounted on the moveable object, the system comprising:

a plurality of electronic linear accelerometers mounted on the moveable object for producing linear acceleration signals;

a processor coupled to the accelerometers for generating orientation signals associated with the moveable object in three degrees of freedom as a function of the linear acceleration signals;

a simulation system communicatively coupled to the processor for generating computer simulation signals as a function of the orientation signals; and

an external tracking system, disposed relative to the moveable object, for generating tracking data signals

associated with the moveable object, wherein the processor modifies the orientation signals as a function of the tracking data signals.

12. The system of claim **11** further comprising: a sensor coupled to the processor for receiving the tracking data signals from the external tracking system.

13. A system for generating computer simulation signals in response to the orientation of a moveable object, the system comprising:

a plurality of electronic linear accelerometers mounted on the moveable object for producing linear acceleration signals;

a processor coupled to the accelerometers for generating orientation signals in three degrees of freedom associated with the moveable object as a function of the linear acceleration signals;

an external tracking system disposed relative to the moveable object for transmitting to the processor tracking data signals associated with the moveable object for modifying the orientation signals as a function of the tracking data signals;

a simulation system communicatively coupled to the processor for generating computer simulation signals as a function of the modified orientation signals;

means for transmitting the tracking data signals from the external tracking system to the processor;

means for transmitting the modified orientation signals from the object to the simulation system; and

means for transmitting the simulation signals from the simulation system to the object.

14. A head-mounted unit for generating a simulated environment in response to head motion of a user, the head-mounted unit comprising:

a plurality of electronic linear accelerometers mounted on the head-mounted unit for producing linear acceleration signals associated with the head motion of a user in three degrees of freedom;

a processor coupled to the accelerometers for generating orientation signals in three degrees of freedom as a function of the linear acceleration signals;

an external tracking system, disposed relative to the user, for transmitting to the processor tracking data signals associated with the head motion of the user for modifying the orientation signals as a function of the tracking data signals;

a simulation system communicatively coupled to the processor for generating computer simulation signals as a function of the modified orientation signals;

means for transmitting the tracking data signals from the external tracking system to the processor;

means for transmitting the modified orientation signals from the head-mounted unit to the simulation system;

means for transmitting the simulation signals from the simulation system to the head-mounted unit; and

coupled to the head-mounted unit, means for generating a simulated environment as a function of the simulation signals.

15. A data glove unit for controlling a simulated environment in response to the hand motion of a user, the data glove comprising:

a plurality of electronic linear accelerometers mounted on the glove unit for producing linear acceleration signals associated with the hand motion of a user in three degrees of freedom;

a processor coupled to the linear accelerometers for generating orientation signals in three degrees of freedom as a function of the acceleration signals;

an external tracking system, disposed relative to the user, for transmitting to the processor tracking data signals associated with the hand motion of the user for modifying the orientation signals as a function of the tracking data signals;

a simulation system communicatively coupled to the processor for generating computer simulation signals as a function of the modified orientation signals;

means for transmitting the tracking data signals from the external tracking system to the processor; and

means for transmitting the modified orientation signals from the glove unit to the simulation system for controlling a simulated environment as a function of the modified orientation signals.

16. A method for generating computer simulation signals in response to the position and orientation of a moveable object from a plurality of electronic linear accelerometers mounted on the moveable object, the method of comprising the steps of:

processing linear acceleration signals generated from the plurality of electronic linear accelerometers mounted on the moveable object;

generating position signals and orientation signals associated with the movement of the object in six degrees of freedom as a function of the linear acceleration signals; and

generating computer simulation signals in response to the position and the orientation signals.

17. The method of claim **16** wherein the step of generating position signals and orientation signals further comprises the step of:

determining an estimated future position signal and an estimated future orientation signal as a function of the position signals, the orientation signals, and a delay time.

18. A method for generating computer simulation signals in response to the position and orientation of a moveable object from a plurality of electronic linear accelerometers mounted on the moveable object in cooperative operation with an external tracking system disposed relative to the moveable object, the method comprising the steps of:

processing linear acceleration signals generated from the plurality of electronic linear accelerometers mounted on the moveable object;

generating position signals and orientation signals associated with the movement of the object in six degrees of freedom as a function of the linear acceleration signals;

generating computer simulation signals in response to the position and the orientation signals; and

processing tracking data signals associated with the object generated from the external tracking system disposed relative to the moveable object; and

modifying the position signals and the orientation signals as a function of the tracking data signals.

19. (Amended) A system for generating computer simulation signals in response to the position and the orientation of a moveable object from a plurality of electronic linear accelerometers mounted on the moveable object, the system comprising:

a plurality of electronic linear accelerometers mounted on a moveable object for producing linear acceleration signals;

a processor coupled to the accelerometers for generating position signals and orientation signals associated with the moveable object six degrees of freedom of as a function of the linear acceleration signals; and

a simulation system communicatively coupled to the processor for generating computer simulation signals as a function of the position signals and the orientation signals.

20. A system for generating computer simulation signals in response to the position and the orientation of a moveable object from a plurality of electronic linear accelerometers mounted on the moveable object, the system comprising:

a plurality of electronic linear accelerometers mounted on a moveable object for producing linear acceleration signals;

a processor coupled to the accelerometers for generating position signals and orientation signals associated with the moveable object in six degrees of freedom as a function of the linear acceleration signals;

a simulation system communicatively coupled to the processor for generating computer simulation signals as a function of the position signals and the orientation signals; and

an external tracking system, disposed relative to the moveable object, for generating racking data signals associated with the moveable object, wherein the processor modifies the position signals and the orientation signals as a function of the tracking data signals.

21. A head-mounted unit for generating a simulated environment in response to head motion of a user, the head-mounted unit comprising:

a plurality of electronic linear accelerometers mounted on the head-mounted unit for producing linear acceleration signals associated with the head motion of a user in six degrees of freedom;

a processor coupled to the accelerometers for generating position signals and orientation signals in six degrees of freedom as a function of the linear acceleration signals;

an external tracking system, disposed relative to the user, for transmitting to the processor tracking data signals associated with the head motion of the user for modifying the position signals and the orientation signals as a function of the tracking data signals;

a simulation system communicatively coupled to the processor for generating computer simulation signals as a function of the modified position signals and the modified orientation signals;

means for transmitting the tracking data signals from the external tracking system to the processor;

means for transmitting the modified position signals and the modified orientation signals from the head-mounted unit to the simulation system;

means for transmitting the simulation signals from the simulation system to the head-mounted unit; and

means coupled to the head-mounted unit for generating a simulated environment as a function of the simulation signals.

* * * * *