US 20080114501A1

(19) United States

(12) Patent Application Publication

(10) Pub. No.: US 2008/0114501 A1

(43) Pub. Date: May 15, 2008

Wu

(54) REMOTE ENGINE START CONFIRMATION AND VEHICLE MONITORING AND CONTROL SYSTEM

(75) Inventor: **Anthony M. Wu**, Vista, CA (US)

Correspondence Address:
DIRECTED ELECTRONICS, INC.
1 VIPER WAY
VISTA, CA 92061

(73) Assignee: **DEI Headquarters Inc.**

(21) Appl. No.: **11/600,368**

(22) Filed: **Nov. 15, 2006**

Publication Classification

(51) **Int. Cl.**
G06F 19/00 (2006.01)

(52) **U.S. Cl.** **701/2**; 701/29

(57) **ABSTRACT**

A remote engine start confirmation and vehicle monitoring and control system includes a transmitter and a controller capable of receiving and processing transmitter signals, the controller comprising a monitoring circuit for detecting a first pulsed voltage pattern and a second pulsed voltage pattern across the battery during an engine start procedure, a signaling circuit for signaling the disengagement of the starter from the engine after a detection of the termination of the first pulsed voltage pattern and the start of the second pulsed voltage pattern, and an initiation circuit for initiating the monitoring of a vehicle condition, such as overheating or low fuel, after the detection. A method for controlling the vehicle operation includes detecting an occurrence of a vehicle condition and performing an operation based on the detection, such as terminating ignition voltage or fuel supply or notifying the operator of the vehicle condition via the transmitter.

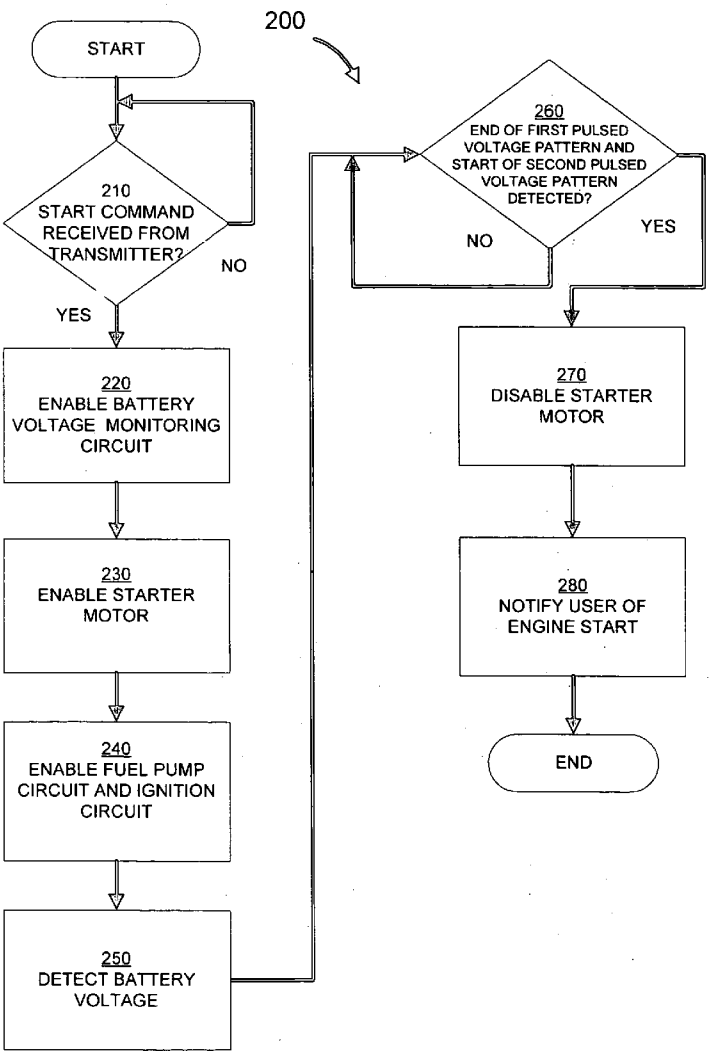

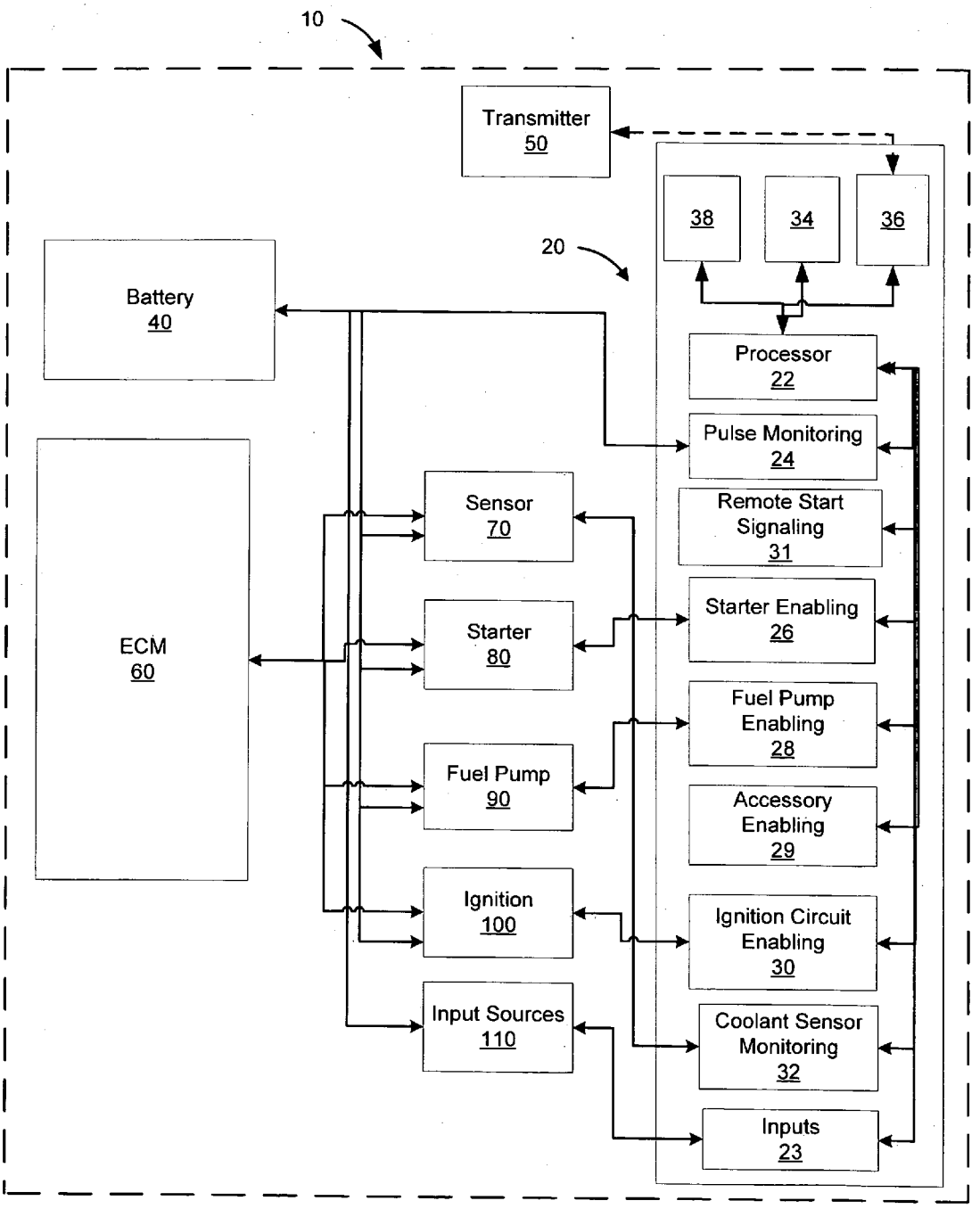
10
Transmitter
50
38
34
36
20
Battery
40
Processor
22
Pulse Monitoring
24
Remote Start
Signaling
31
Sensor
70
ECM
60
Starter
80
Starter Enabling
26
Fuel Pump
Enabling
28
Fuel Pump
90
Accessory
Enabling
29
Ignition
100
Ignition Circuit
Enabling
30
Input Sources
110
Coolant Sensor
Monitoring
32
Inputs
23

FIG. 1

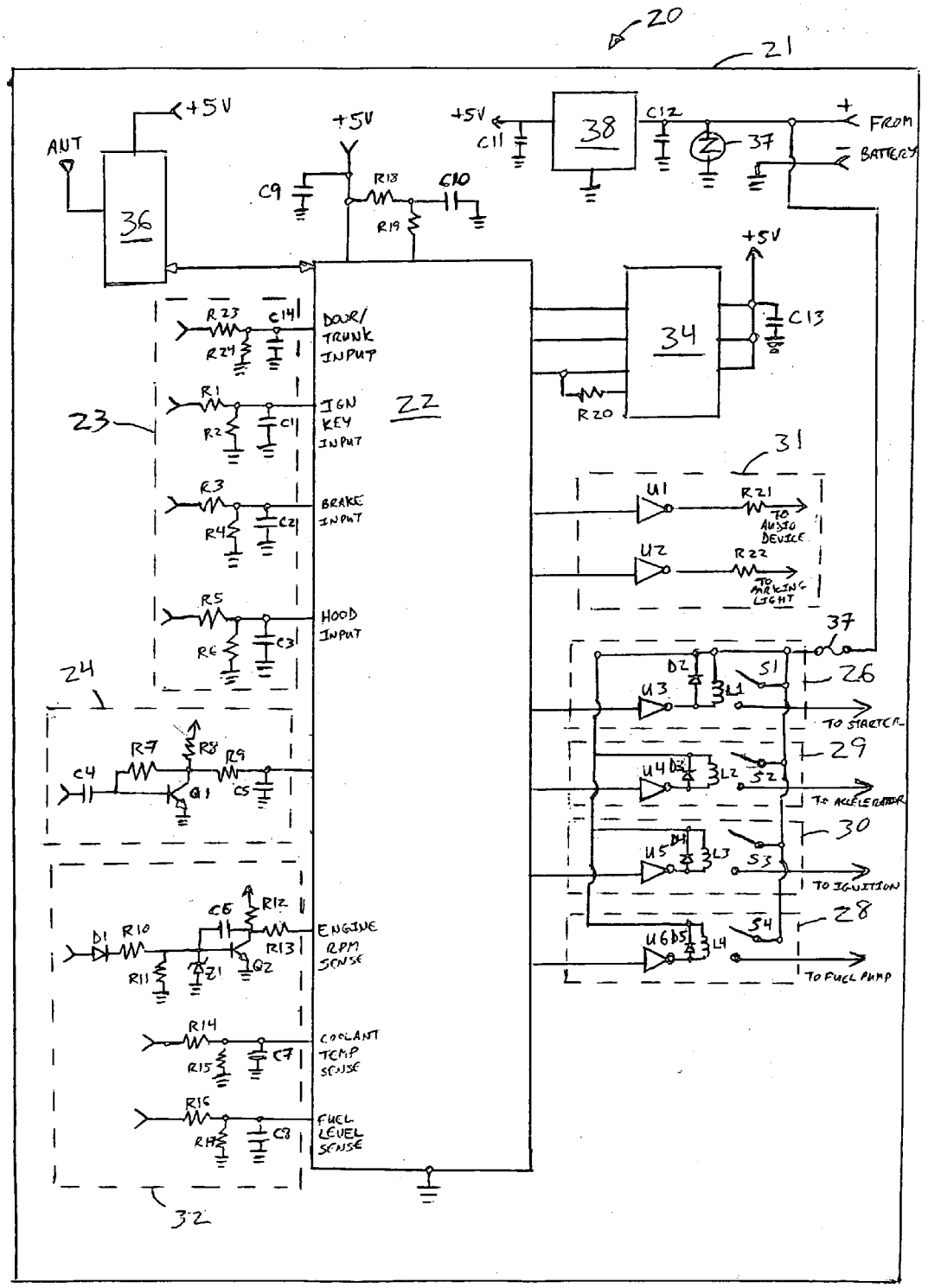
20
21
+5V
ANT
36
+5V
C9
R18
C10
R19
+5V
C11
38
C12
37
+
FROM
−
BATTERY
+5V
34
C13
R20
R23
C14
R24
DOOR/
TRUNK
INPUT
R1
R2
C1
IGN
KEY
INPUT
22
23
R3
R4
C2
BRAKE
INPUT
R5
R6
C3
HOOD
INPUT
24
C4
R7
R8
R9
Q1
C5
C6
R12
D1
R10
R13
ENGINE
RPM
SENSE
R11
Z1
Q2
R14
R15
C7
COOLANT
TEMP
SENSE
R16
R17
C8
FUEL
LEVEL
SENSE
32
31
U1
R21
TO
AUDIO
DEVICE
U2
R22
TO
PARKING
LIGHT
37
D2
S1
26
U3
L1
TO STARTER
29
U4
D3
L2
S2
TO ACCELERATOR
30
U5
D4
L3
S3
TO IGNITION
28
U6
D5
L4
S4
TO FUEL PUMP

FIG. 2

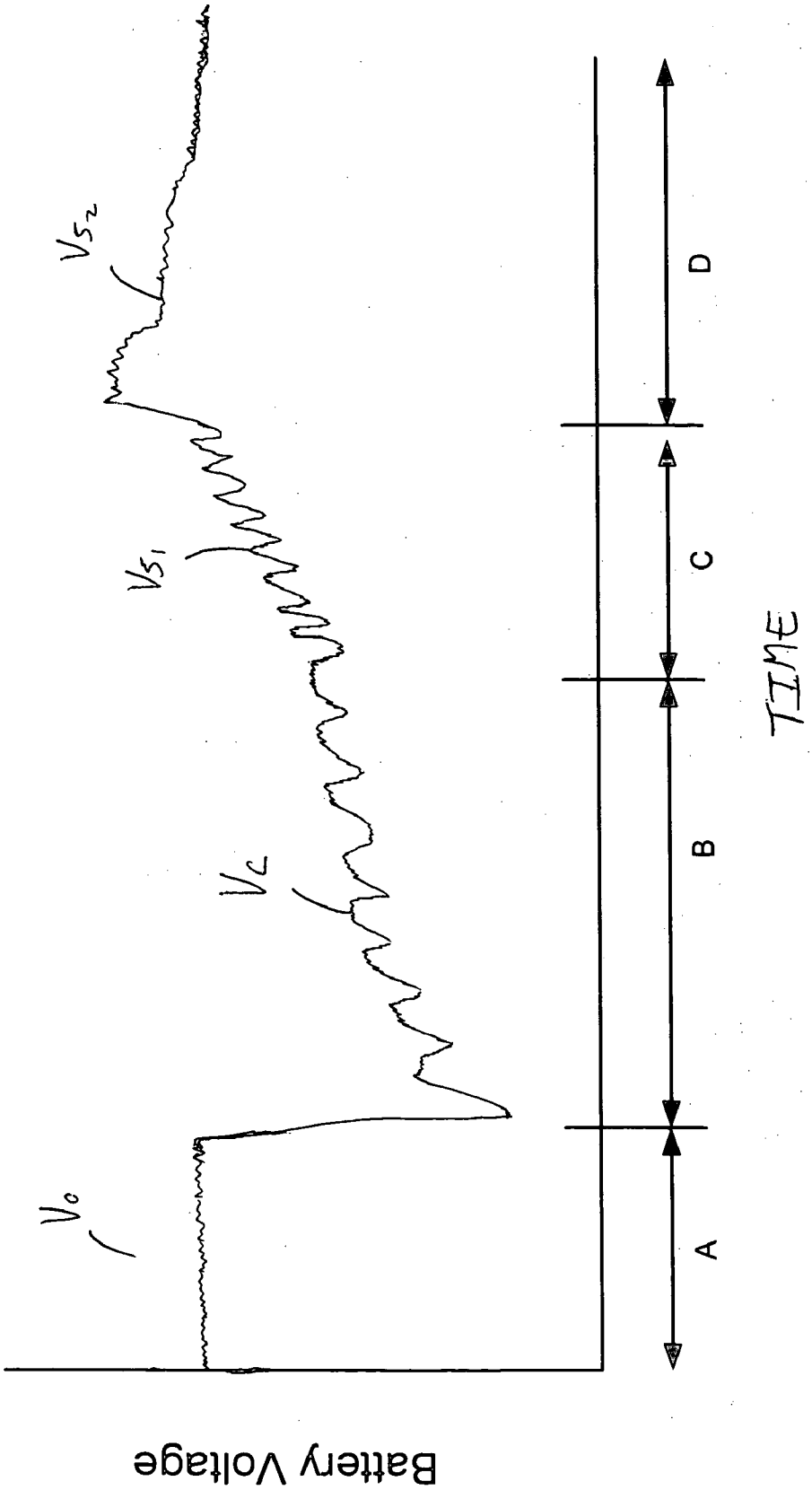

FIG. 3

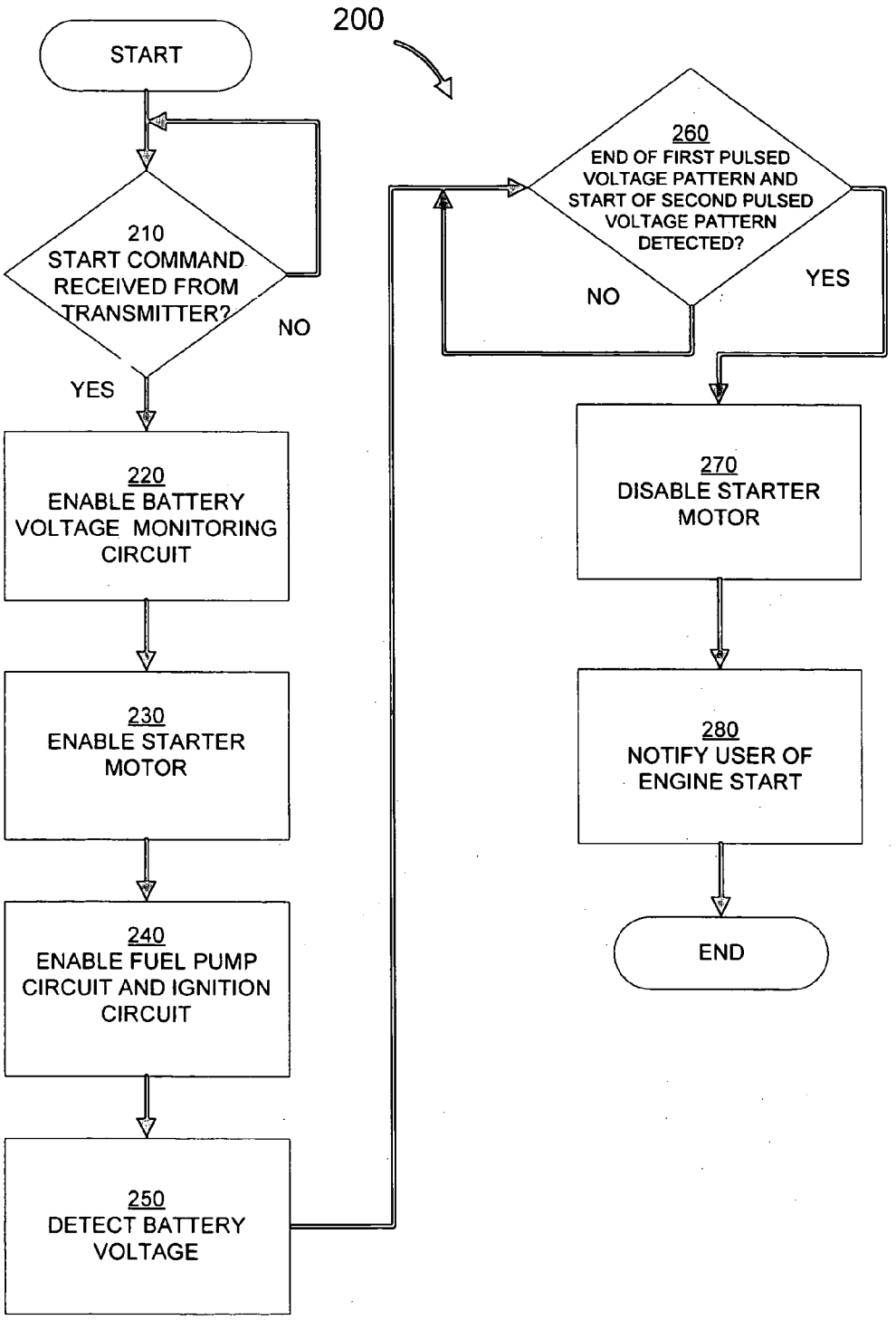
200
START
210
START COMMAND RECEIVED FROM TRANSMITTER?
NO
YES
220
ENABLE BATTERY VOLTAGE MONITORING CIRCUIT
230
ENABLE STARTER MOTOR
240
ENABLE FUEL PUMP CIRCUIT AND IGNITION CIRCUIT
250
DETECT BATTERY VOLTAGE
260
END OF FIRST PULSED VOLTAGE PATTERN AND START OF SECOND PULSED VOLTAGE PATTERN DETECTED?
NO
YES
270
DISABLE STARTER MOTOR
280
NOTIFY USER OF ENGINE START
END

FIG. 4

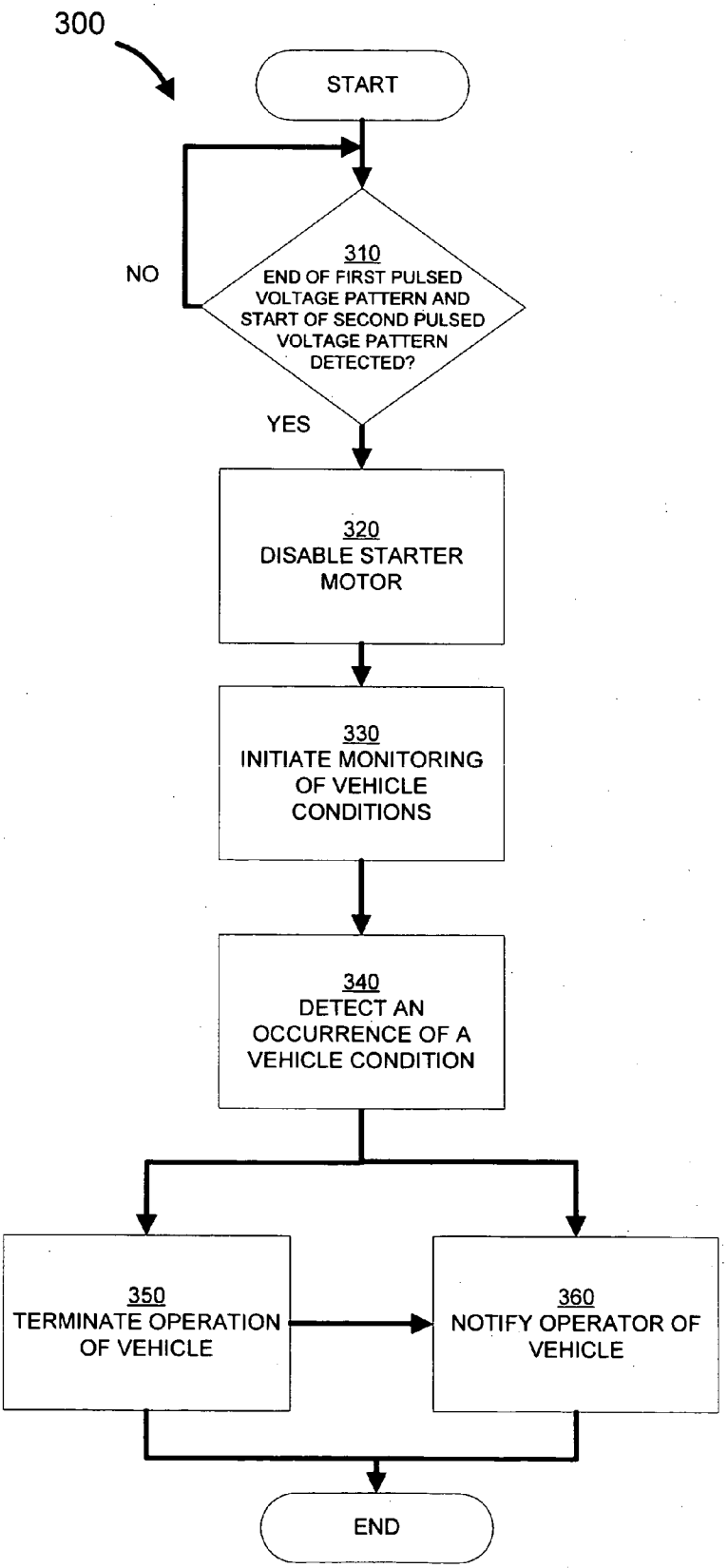
300
START
310
END OF FIRST PULSED VOLTAGE PATTERN AND START OF SECOND PULSED VOLTAGE PATTERN DETECTED?
NO
YES
320
DISABLE STARTER MOTOR
330
INITIATE MONITORING OF VEHICLE CONDITIONS
340
DETECT AN OCCURRENCE OF A VEHICLE CONDITION
350
TERMINATE OPERATION OF VEHICLE
360
NOTIFY OPERATOR OF VEHICLE
END

FIG. 5

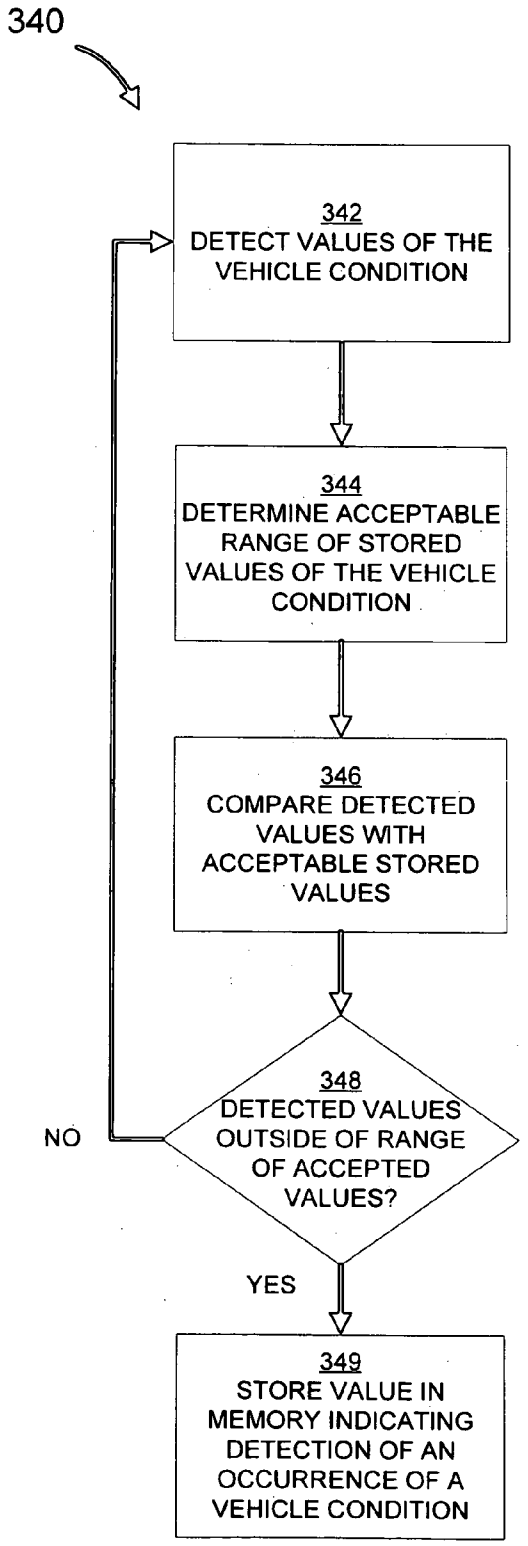
340
342
DETECT VALUES OF THE VEHICLE CONDITION
344
DETERMINE ACCEPTABLE RANGE OF STORED VALUES OF THE VEHICLE CONDITION
346
COMPARE DETECTED VALUES WITH ACCEPTABLE STORED VALUES
348
DETECTED VALUES OUTSIDE OF RANGE OF ACCEPTED VALUES?
NO
YES
349
STORE VALUE IN MEMORY INDICATING DETECTION OF AN OCCURRENCE OF A VEHICLE CONDITION

FIG. 6

REMOTE ENGINE START CONFIRMATION AND VEHICLE MONITORING AND CONTROL SYSTEM

FIELD OF THE INVENTION

[0001] The embodiments of the present invention relate generally to vehicular security systems, and, more particularly, to vehicular security systems with remote start functionality.

BACKGROUND

[0002] Security systems with remote start functionality are known in the art. These systems generally operate by using a remote transmitter to send a signal to a transceiver within the vehicle to cause the vehicle's engine to start. Remote start functionality is beneficial to a user in that it allows the user to start a vehicle from a distance away from the vehicle, for example within a home or office. Remote start functionality has been particularly useful in areas having colder environments because it allows the user to start the vehicle and warm the vehicle's interior to a comfortable temperature prior to entry. In a similar manner, in warmer environments, remote start capability allows the user to start the vehicle and cool the vehicle's interior to a comfortable temperature prior to entry.

[0003] An important feature of remote start systems is determining the proper time required for the starting function to occur, hence the amount of time necessary for the starter to attempt to start the engine. If the starter attempts to start the engine after the engine has already been started, this can lead to damage of the starter and unnecessary draining of the battery. If the starter does not attempt to start the engine for the proper time, the engine will not be started. Therefore, it is crucial for remote start systems to properly detect when a start has occurred to prevent damage to the starter and draining of the battery.

[0004] Different methods to detect when a vehicle has started have been used in security systems with remote start capabilities. Some systems have relied on detecting engine revolutions per minute (RPMs). While this method achieves the desired purpose, there can be a significant delay in the time from when the engine is actually started until the time when the detection occurs and the starter is disengaged from the engine flywheel. Other systems have relied on detecting the output from an alternator/generator. The alternator/generator output passes through a voltage regulator, from which the voltage can be monitored. After an engine has successfully started and is running smoothly, the voltage output should be in the range of 13.6 to 14 Volts. When the detection circuit detects a voltage within this range, the starter is then disengaged from the engine flywheel. The drawback of remote start systems using this type of detection circuit is that certain vehicles, such as those with engines that do not perform optimally, may be started, but may not produce a voltage output from the alternator/generator that falls within the 13.6 to 14 Volt range for a certain period of time. Therefore, there exists the possibility that the starter will continue to attempt to start the vehicle's engine after the engine has already been started, thus shortening the life of the starter and causing unnecessary drain on the vehicle's battery.

[0005] Another important feature associated with remote start security systems is the ability to start a vehicle from a far away distance. Recent advances in technology have allowed transmitters to start vehicles from up to one mile away. Advantages of remote starting from far distances include the ability to have one's vehicle engine fully warmed to operating temperature as well as to allow a heater or air conditioner to either heat or cool the vehicle's interior to a desired temperature prior to the owner entering the vehicle. One drawback of security systems with far-ranging remote start capabilities is the lack of awareness a vehicle owner has over the operation of their vehicle from the time the vehicle is remotely started until the time the user enters the vehicle. In circumstances where a vehicle owner remotely starts their vehicle from a mile away, the time it takes for the vehicle owner to reach the vehicle can be up to ten minutes, possibly longer. During the period the owner is traveling to their vehicle, various undesirable conditions that may have been prevented if the owner were present in the vehicle, may occur, such as the vehicle engine overheating, the engine or other related drive components may malfunction, or the vehicle may run out of fuel. Current security systems do not provide capabilities to monitor and control vehicle performance after an engine has been remotely started, or to notify a vehicle owner after an undesirable condition has occurred.

[0006] Therefore, it would be advantageous to provide a security system with remote start functionality that can provide confirmation of when a vehicle's engine has been started without encompassing any of the drawbacks of the prior art systems. It would also be advantageous to provide a security system with remote start functionality that can provide a vehicle owner with notification when an undesirable vehicle condition, such as engine overheating, has occurred.

SUMMARY

[0007] The preferred embodiment of the invention provides a remote engine start confirmation and vehicle monitoring and control system for use in a vehicle having a battery, a starter, and an engine having a flywheel attached thereto, the system including a transmitter and a controller, the controller including a pulse monitoring circuit for detecting a first pulsed voltage pattern and a second pulsed voltage pattern across the resistance of the battery during an engine start procedure, the second pulsed voltage pattern having a higher frequency than the first pulsed voltage pattern, a signaling circuit for signaling the disengagement of the starter from the flywheel after a detection of the termination of the first pulsed voltage pattern and the start of the second pulsed voltage pattern, and an initiation circuit for initiating the monitoring of a vehicle condition after the detection of the termination of the first pulsed voltage pattern and the start of the second pulsed voltage pattern. When a user remotely starts the vehicle engine by use of the transmitter, the monitoring circuit detects a first pulsed voltage pattern. The first pulsed voltage pattern, having a lower frequency than the second pulsed voltage pattern, is caused by the additional resistance produced by the engine during the compression sequence during a starting operation, which causes the starter to draw more power from the vehicle battery. After the engine is started, the second rotation of the started engine will rotate the starter and the pulses at the battery terminals during the remote start sequence will change from lower frequency to higher frequency, creating a second pulsed voltage pattern. The signaling circuit then sends a signal to disengage the starter from the flywheel. At this time, the initiation circuit initiates the monitoring of a vehicle condition.

[0008] The vehicle conditions monitored can include, but are not limited to, engine temperature, fuel level, and engine

revolutions per minute. If the vehicle condition monitored is engine temperature, the means for initiating the monitoring of an engine condition after the detection of the termination of the first pulsed voltage pattern and the start of the second pulsed voltage pattern is a processor operatively connected to a vehicle temperature sensor. If the engine condition monitored is fuel level, the means for initiating the monitoring of a vehicle condition after the detection of the termination of the first pulsed voltage pattern and the start of the second pulsed voltage pattern is a processor operatively connected to a vehicle fuel sensor. If the vehicle condition is engine revolutions per minute, the means for initiating the monitoring of an engine condition after the detection of the termination of the first pulsed voltage pattern and the start of the second pulsed voltage pattern is a processor operatively connected to a vehicle tachometer. The system can also monitor other inputs that relate to various events such as ignition key input, brake system input, hood input, door input, and trunk input.

[0009] Another embodiment of the invention provides a remote engine start confirmation and vehicle monitoring and control system for use in a vehicle having a battery, a fuel pump, an ignition, a starter, a safety system, a comfort system, and an engine having a flywheel attached thereto, the system including a transmitter and a controller, the controller including a means for initiating an engine start procedure, a pulse monitoring circuit for detecting a first pulsed voltage pattern and a second pulsed voltage pattern across the resistance of the battery during an engine start procedure, the second pulsed voltage pattern having a higher frequency than the first pulsed voltage pattern, a signaling circuit for signaling the disengagement of the starter from the flywheel after a detection of the termination of the first pulsed voltage pattern and the start of the second pulsed voltage pattern, and an initiation circuit for initiating the monitoring of a vehicle condition after the detection of the termination of the first pulsed voltage pattern and the start of the second pulsed voltage pattern. When a user remotely starts the vehicle engine by use of the transmitter, the means for initiating an engine start procedure initiates the engine start procedure, the monitoring circuit detects the termination of the first pulsed voltage pattern and the start of the second pulsed voltage pattern, thus indicating that the engine has been started, then the signaling circuit sends a signal to disengage the starter from the flywheel, and the initiation circuit initiates the monitoring of a vehicle condition.

[0010] A method is also provided for controlling the operation of a vehicle having a battery, a starter, and an engine having a flywheel attached thereto, the system including a transmitter and a controller, the method comprising the steps of detecting a first pulsed voltage pattern and a second pulsed voltage pattern across the resistance of the battery during an engine start procedure, the second pulsed voltage pattern having a higher frequency than the first pulsed voltage pattern, signaling the disengagement of the starter from the flywheel after a detection of the termination of the first pulsed voltage pattern and the start of the second pulsed voltage pattern, initiating the monitoring of a vehicle condition after the detection of the termination of the first pulsed voltage pattern and the start of the second pulsed voltage pattern, detecting a vehicle condition, and performing an operation based on the detection of a vehicle condition. The step of detecting a vehicle condition can include the steps of determining a range of stored values associated with a vehicle condition, comparing the range of stored values of the vehicle condition with detected values of the vehicle condition, and determining when the detected values are outside of the range of stored values. The step of determining a range of stored values associated with a vehicle condition can be accomplished by the controller monitoring and recording the values associated with the vehicle condition during operation of the vehicle. The step of performing an operation based on the detection of a vehicle condition can include terminating the operation of the vehicle, which may be accomplished by stopping the fuel supply to the engine or by disabling the ignition. The step of performing an operation based on the detection of a vehicle condition can also include sending a signal to the transmitter to inform a user of the vehicle condition.

[0011] The above method can be performed within a vehicle system including a controller, battery, remote transmitter, engine control module, coolant temperature sensor, starter motor, fuel pump, ignition circuit, safety system, and comfort system. The safety system can comprise a window defrost system, an airbag system, a passenger restraint system, a vehicle collision warning system, or similar safety system. The comfort system can include an air conditioning and heating system. The controller can include a processor, a pulse monitoring circuit, a starter enabling means, a fuel pump enabling means, an ignition circuit enabling means, a coolant sensor monitoring circuit, a memory module, and a transceiver. The processor is electrically connected to each of pulse monitoring circuit, starter enabling means, fuel pump enabling means, ignition circuit enabling means, coolant sensor monitoring circuit, memory module, and transceiver. Additionally, the processor can be connected to various vehicle inputs such as the door, trunk, ignition key, brake system, and hood inputs, to allow the system to detect various triggering events related to these inputs. The battery is connected to pulse monitoring circuit, as well as each of coolant temperature sensor, starter motor, fuel pump, and ignition circuit. The engine control module is connected to each of coolant temperature sensor, starter motor, fuel pump, and ignition circuit. The engine control module, coolant temperature sensor, starter motor, fuel pump, and ignition circuit can all comprise standard vehicle components that can differ in features depending on the particular make and model of the vehicle.

[0012] These and other features and aspects of the embodiments of the invention will be better understood with reference to the description, drawings, and appended claims.

BRIEF DESCRIPTION OF THE FIGURES

[0013] FIG. **1** shows a block diagram of the preferred embodiment of the remote start confirmation and vehicle control system as connected within a vehicle.

[0014] FIG. **2** shows a schematic diagram of the circuitry contained within the controller module.

[0015] FIG. **3** shows a graph of the battery voltage conditions before, during, and after a remote start engine start procedure.

[0016] FIG. **4** shows a flow diagram of method for confirming the starting of a vehicle using the preferred embodiment of the remote start confirmation and vehicle control system as connected within a vehicle.

[0017] FIG. **5** shows a flow diagram of method for controlling the operation of a vehicle using the preferred embodiment of the remote start confirmation and vehicle control system as connected within a vehicle.

[0018] FIG. **6** shows a flow diagram of the step of detecting an occurrence of a vehicle condition using the preferred embodiment of the remote start confirmation and vehicle control system as connected within a vehicle.

DETAILED DESCRIPTION OF THE PREFERRED EMBODIMENTS

[0019] Reference will now be made in detail to several embodiments of the invention that are illustrated in the accompanying drawings. Wherever possible, same or similar reference numerals are used in the drawings and the description to refer to the same or like parts. The drawings are in a simplified form and are not to precise scale. For purposes of convenience and clarity only, directional terms, such as, top, bottom, left, right, up, down, over, above, below, beneath, rear, and front, may be used with respect to the accompanying drawings. These and similar directional terms should not be construed to limit the scope of the invention in any manner. Furthermore, in descriptions and in claims, "couple," "connect," and similar words with their inflectional morphemes do not necessarily import an immediate or direct connection, but include connections through mediate elements within their meanings.

[0020] Referring more particularly to the drawings, FIG. **1** shows a block diagram of the preferred embodiment of the remote start confirmation and vehicle control system **10** as connected within a vehicle. System **10** includes a controller **20**, a battery **40**, a transmitter **50**, an engine control module **60**, sensor **70**, a starter motor **80**, a fuel pump **90**, and an ignition circuit **100**, and input sources **1 10**. Controller **20** includes a processor **22**, a pulse monitoring circuit **24**, a starter enabling means **26**, a fuel pump enabling means **28**, an ignition circuit enabling means **30**, a coolant sensor monitoring circuit **32**, memory module **34**, transceiver **36**, and voltage regulator **38**. Processor **22** is electrically electrically connected to each of pulse monitoring circuit **24**, starter enabling means **26**, fuel pump enabling means **28**, ignition circuit enabling means **30**, sensor monitoring circuit **32**, memory module **34**, transceiver **36**, and voltage regulator **38**. Battery **40** is connected to pulse monitoring circuit **24**, as well as each of coolant temperature sensor **70**, starter motor **80**, fuel pump **90**, and ignition circuit **100**. Battery **40** is a standard 12V or 24V battery as used in the automobile industry. Engine control module **60** is connected to each of sensor **70**, starter motor **80**, fuel pump **90**, and ignition circuit **100**. Engine control module **60** comprises the standard engine control module that is equipped in every vehicle to monitor and control engine conditions. Sensor **70**, starter motor **80**, fuel pump **90**, and ignition circuit **100** all comprise standard vehicle components that can differ in features depending on the particular make and model of the vehicle. Input sources **110** can include an ignition key, the brake light, a hood switch, a door switch, a trunk switch, or other switch as generally used on vehicle security systems.

[0021] Processor **22** is a general-purpose, software-driven digital device that can be used for performing many functions of controller **20**. Processor **22** can be a microprocessor, microcontroller, or other machine capable of performing binary calculations. Pulse monitoring circuit **24** comprises an alternating current (A/C) signal amplifier circuit that is either part of processor **22** or an independent circuit to provide signal to processor **22**. The A/C amplifier circuit is a high gain amplifier circuit that either has an analog or digital design and is used to amplify the higher frequency second pulsed voltage pattern after the termination of the first pulsed voltage pattern. Starter enabling means **26** comprises a processor controller and relay system that is controlled by processor **22**. Starter enabling means **26** is preferably serially connected to the input of starter motor **80**. Starter enabling means **26** operates to connect starter motor **80** to the positive terminal of battery **40** and to disconnect starter motor **80** at the end of the remote start process. Fuel pump enabling means **28** comprises a processor **22** and relay system to connect one terminal of fuel pump **90** to the positive terminal of battery **40** or to the ground circuit of the vehicle. Ignition circuit enabling means **30** comprises processor **22** and a relay system to activate ignition circuit **100** for internal combustion process to take place during remote engine start process. Sensor monitoring circuit **32** can comprise the vehicle's coolant temperature and fuel level sensors and processor **22** to process the electrical signal of the vehicle's sensors.

[0022] Memory module **34** includes instruction code for processor **22** as well as all data detected and processed by processor **22**. Memory module **34** can comprise one module or several modules. Memory module **34** can include random access memory (RAM) and read only memory (ROM). The ROM stores the program code executed by processor **22** and the preprogrammed data used by processor **22** in the course of executing the program code. The ROM may include a programmable ROM (PROM) module, an electrically programmable ROM (EPROM) module, and an electrically erasable programmable ROM (EEPROM) module. In some variants, memory module **34** includes an EEPROM device that also stores data received from the other window control system components. The data is thus preserved through interruptions in electrical power and can be retrieved in the future for diagnostic and maintenance purposes. The RAM is a scratch pad memory for storing intermediate results and other temporary data generated by processor **22** in the course of executing the program code. Voltage regulator **38** is a standard regulating device that limits the voltage of the system to 5 Volts.

[0023] Transmitter **50** is a portable user hand-held remote control device that allows the operator of system **10** to perform various operations on a vehicle at locations distant from a vehicle. For example, the transmitter **50** may arm and disarm the security system, lock and unlock doors and trunk, sound siren, start engine, and perform other functions when corresponding commands are entered by the user. If the security system is configured so that transmitter transceiver **50** can be used to lock and unlock doors of an automobile, the system effectively becomes a keyless entry device, in addition to performing other functions. Transmitter **50** is configured to communicate with transceiver **36**. Transmitter **50** is configured to both send and receive signals from transceiver **36**. Transceiver **36** can be configured to communicate with various types of transmitter **50** as disclosed herein and recognized by one with ordinary skill in the art. Transmitter **50** can communicate with transceiver **36** over a communication link that can be a digital bus, analog connection, optical link, radio frequency (RF) link, infrared link, or other wired and wireless connections as would be recognized by one with ordinary skill in the art. Transmitter **50** is not limited to a particular communication range by the scope of this invention. Transmitter **50** can include an alphanumeric display, and pushbutton and scroll wheel input devices to allow the operator of the

system **10** to send and receive information such as vehicle status, diagnostic information, maintenance data, and acknowledgement data.

[0024] Sensor **70** can comprise various sensors depending on the type of vehicle condition to be monitored. For example, sensor **70** can comprise a coolant temperature sensor to monitor the temperature of the coolant temperature to prevent overheating of the vehicle's engine. Examples of other sensors **70** include, but are not limited to, a fuel pump sensor to monitor vehicle fuel level and an engine RPM sensor to monitor engine revolutions. System **10** is not limited to one sensor **70** connected to processor **22**, but can also include several sensors **70**, either to monitor the same condition or several different conditions. Sensor monitoring circuit **32** will be configured to communicate with sensor **70**, and thus the particular configuration of sensor monitoring circuit **32** will depend on the sensor **70** used in system **10**. For example, if sensor **70** is a coolant temperature sensor, sensor monitoring circuit **32** will comprise a coolant temperature sensor monitoring circuit to specifically monitor coolant temperature. However, it is also within the scope of the embodiments of this invention for sensor monitoring circuit **32** to contain circuitry to monitor various vehicle conditions, such as fuel level, coolant temperature, and engine revolutions per minute, such that only one sensor monitoring circuit **32** is needed in system **10**, rather than different sensor monitoring circuits **32** for each vehicle condition to be monitored.

[0025] In operation, system **10** can be used to provide remote start confirmation and vehicle control capabilities. A user can initiate a remote start procedure by pressing a button on transmitter **50**. At this point, transceiver **36** will receive the transmission and forward it to processor **22**. Processor **22** will then interpret the command and output a signal to initiate starter enabling means **26**, wherein starter enabling means **26** will cause starter motor **80** to engage the flywheel on an engine (not shown) to cause the flywheel to rotate, thus causing the engine crankshaft to rotate the engine pistons to create the internal combustion necessary to start the vehicle. After this occurs, processor **22** will initiate ignition enabling means **30** and fuel pump enabling means **28**. It is preferable to initiate starter motor **80**, then ignition enabling means **30**, then fuel pump enabling means **28** in that particular order to prevent flooding of the cylinders with fuel before there is engine rotation and sparks. This process allows the engine to easily start on the proper air/fuel mixture and prevents difficult starting due to an overly rich air/fuel mixture.

[0026] At this same time processor **22** causes pulse monitoring circuit **24** to initiate the monitoring of the voltage of battery **40**. During the starting process, the voltage of battery **40** will vary in a pulsed pattern, as shown in FIG. **3**. When pulse monitoring circuit **24** detects the termination of a first pulsed voltage pattern and the start of a second pulsed voltage pattern, the second pulsed voltage pattern having a higher frequency than the first pulsed voltage pattern, a signal will be sent back to processor **22** to disengage starter motor **80** from the flywheel, with processor **22** then sending a signal to starter enabling means **26** to disengage starter motor **80** from the flywheel. At this time, processor **22** will then initiate sensor monitoring circuit **32** to begin the monitoring of a vehicle condition. Upon detection of a vehicle condition, sensor monitoring circuit **32** can output a signal to processor **22**, wherein processor **22** can then disable the affected vehicle component. Processor **22** can then notify the operator of the vehicle by causing transceiver **36** to send a signal to transmitter transceiver **50**.

[0027] FIG. **2** shows a schematic diagram of the circuitry contained within controller **20**. Controller **20** can include a housing **21** that contains a circuit board containing processor **22**, inputs **23**, pulse monitoring circuit **24**, starter enabling means **26**, fuel pump enabling means **28**, ignition circuit enabling means **30**, remote starting signaling outputs **31**, sensor monitoring circuit **32**, memory **34**, transmitter **36**, and voltage regulator **38**. As shown, inputs **23** include inputs from input sources **110**. More or less inputs **23** can be included within controller **20** depending on the number of input sources **110** and the particular characteristics of the vehicle and system **10**. Such additional inputs **23** can be similar in configuration as to the inputs shown. Inputs **23** contain resistors R**1**-R**6**, with R**1**, R**3**, and R**5** preferably having a resistance of 4.7 kΩ and R**2**, R**4**, and R**6** preferably having a resistance of 3 kΩ. Inputs **23** also contain capacitors C**1**-C**3** each having a capacitance of 0.1 μF. Controller **20** can also include a capacitor C**9** connected to processor **22** for helping to prevent self-oscillation of processor **22**. Controller **20** can further include a power up reset circuit comprised of a capacitor C**10** and resistors R**18** and R**19**, which is used to provide a short time delay to rest processor **22** after power is applied to processor **22**.

[0028] Memory **34**, preferably an EEPROM module, receives a +5V input and is connected to processor **22** via circuitry that includes a resistor R**20** and a capacitor C**13**. Transmitter **36** also receives a +5V input and is connected directly to processor **22** such that signals can readily flow between transceiver **36** and processor **22**. Voltage regulator **38** serves to regulate the voltage level to 5V or DC voltage levels the system **20** requires. Circuitry relating to voltage regulator **38** includes capacitor C**11** with a capacitance of 10 μF, capacitance C**12** with a capacitance of 0.1 μF, and a 27V surge protector **37** that protects the circuitry from surging battery voltage. Processor **20** contains circuitry connected thereto for the described function in this disclosure for remote start confirmation and engine monitoring functions, the circuitry receiving an input of +5V and including capacitor C**9** with a capacitance of 0.1 μF, resistor R**18** with a resistance of 10 kΩ, resistor R**19** with a resistance of 1 kΩ, and capacitor C**10** with a capacitance of 0.1 μF. Pulse monitoring circuit **24** can be a digital or analog amplifying circuit. Pulse monitoring circuit **24** includes resistor R**7** with a resistance of 750 kΩ, resistor R**8** with a resistance of 15 kΩ, and resistor R**9** with a resistance of 2 kΩ. Circuit **24** also includes capacitor C**4** with a capacitance of 0.22 μF and capacitor C**5** with a capacitance of 0.1 μF. Circuit **24** further includes a transistor Q**1**.

[0029] As shown, sensor monitoring circuit **32** includes three sensing circuits—an engine RPM sensing circuit, a coolant temperature sensing circuit, and a fuel level sensing circuit. However, sensor monitoring circuit **32** can comprise more or less circuitry as required by the particular characteristics of the vehicle and system **10**. For example, sensor monitoring circuit **32** can also contain a battery level sensing circuit, an oil level sensing circuit, or ambiance temperature sensing of any enclosed area of a vehicle. In an embodiment of the invention suited for commercial vehicle applications, the temperature sensing means can sense the temperature of an enclosed area for cargo if the temperature is too high or too low for the type of product that being transported. The alert signal can be sent to the operator/driver to notify them of the

condition and to remote start the vehicle to either heat or cool the enclosed area to the temperature that is acceptable for the type of goods being transported. The engine RPM sensing circuit contained within sensor monitoring circuit **32** includes resistors R**10**-R**13**, with R**10** having a resistance of 5.1 kΩ, R**11** having a resistance of 20 kΩ, R**12** having a resistance of 7.5 kΩ, and R**13** having a resistance of 10 kΩ. RPM sensing circuit can also contain a diode D**1**, a zener diode D**2**, a transistor Q**2**, and a capacitor C**6**. Coolant temperature sensing circuit contains a resistor R**14** with a resistance of 4.7 kΩ, resistor R**15** with a resistance of 3 kΩ, and capacitor C**7** with a capacitance of 0.1 ΩF. Fuel level sensing circuit can include a resistor R**16** with a resistance of 4.7 kΩ, resistor R**17** with a resistance of 3 kΩ, and capacitor C**8** with a capacitance of 0.1 μF.

[0030] Remote starting signaling output **31** can include various outputs to serve remote start related functions. For example, as shown, remote starting signaling output **31** includes an output to an audio device and another output to a parking light relay to alert a user that the remote start process has been initiated and there after the vehicle has remotely started. The audio device output can include an operational amplifier U**1** and a resistor R**21** having a resistance of 21 Ω. The parking light relay output can include an operational amplifier U**2** and a resistor R**22** having a resistance of 21 Ω.

[0031] Starter enabling means **26** is preferably a relay that allows a signal to be sent to starter motor **80** to start the vehicle. Starter enabling means **26** can include an operational amplifier U**3** connected to a diode D**2** and an inductor L**1**, with a switch S**1** connected thereto, such that inductor L**1** can control whether or not switch S**1** is opened or closed. Accelerator accessories enabling means **29** is also preferably a relay that allows a signal to be sent to one or more of the accelerator accessories, such as the air conditioner, heater, window defroster, interior lights, dome light, etc . . . , to ready the vehicle to be driven in a safe and comfortable condition. Accelerator accessories enabling means **29** can include an operational amplifier U**4** connected to a diode D**3** and an inductor L**2**, with a switch S**2** connected thereto, such that inductor L**2** can control whether or not switch S**2** is opened or closed. Ignition circuit enabling means **30** is also preferably a relay that allows a signal to be sent to the ignition circuit to allow the ignition to be energized to allow starting. Ignition circuit enabling means **30** can include an operational amplifier U**5** connected to a diode D**4** and an inductor L**3**, with a switch S**3** connected thereto, such that inductor L**3** can control whether or not switch S**3** is opened or closed. Fuel pump enabling means **28** is also preferably a relay that allows a signal to be sent to the fuel pump to allow the operation of the vehicle's engine. Fuel pump enabling means **28** can include an operational amplifier U**6** connected to a diode D**5** and an inductor L**4**, with a switch S**4** connected thereto, such that inductor L**4** can control whether or not switch S**4** is opened or closed.

[0032] FIG. **3** shows a graph of the voltage of battery **40** before, during, and after a remote start engine start procedure. The x-axis of the graph represents the time elapsed during the start procedure, with reference A denoting the time before the engine start procedure, reference B denoting the time during the engine start procedure, reference C denoting the time between when the engine is started and the voltage of battery **40** spikes due to the input voltage received from the vehicle alternator, and reference D denoting the time after the engine start procedure wherein the voltage of battery **40** initially spikes due to the input voltage from the vehicle alternator, then returns normal operating voltage. During time period A, the voltage of battery **40** is denoted by reference value Vo, which represents a constant voltage. During time period B, the cranking of the engine by the starter motor, the voltage of battery **40** is a first pulsed voltage pattern denoted by reference value Vc. During time period C, in the early stage of a vehicle start, a second pulsed voltage pattern of battery **40** is denoted by reference value Vs_1. During time period D, in the latter stage of a vehicle start, the voltage of battery **40** is denoted by reference value Vs_2. Time period A is a variable time period depending on when the engine start command is received. The duration of time period B and time period C ranges from anywhere between 0.60 s to 0.80 s. The duration of time period D can range from 0.50 s to 0.80 s.

[0033] When a user presses a button on transmitter **50** to initiate an engine start procedure, voltage Vo experiences a substantial drop and then begins a first pulsed voltage pattern as shown by Vc. During time period B, starter motor **80** draws more power from battery **40** during the compression sequence of the pistons of the vehicle engine, causing the first pulsed voltage pattern Vc to have a certain frequency. (Thereafter, the application of the ignition circuit enabling means **30** and fuel pump enabling means **28** will complete the needed requirement for the rotation engine to start). After the engine is started, the second rotation of the engine will outpace the slower rotation of starter motor **80**. Thus, the battery voltage after starting, denoted as Vs_1, exhibits a second pulsed voltage pattern that has a higher frequency than the first pulsed voltage pattern Vc. During time period D, the voltage of battery **40**, denoted as Vs_2, will first spike as a result of the influx of voltage from the vehicle alternator, then will lower to the normal operating voltage of battery **40**.

[0034] FIG. **4** shows a flow diagram of method **200** for confirming the starting of a vehicle using the preferred embodiment of the remote start confirmation and vehicle control system as connected within a vehicle. Method **200** begins at step **210** with determining if a start command has been received from the remote transmitter (not shown). If no start command has been received, the method starts over. If a start command has been received, step **240** involves enabling the starter motor. Step **230** next involves enabling the battery pulse voltage detection circuit. Thereafter, step **220** includes enabling the fuel pump circuit and the ignition circuit. Step **250** next involves detecting the battery voltage. Step **260** involves determining whether the end of the pulsed voltage pattern has been detected. If the end of the first pulsed voltage pattern is not detected, step **260** repeats. If the end of the first pulsed voltage pattern is detected and the start of the second pulsed voltage is detected, step **270** involves disabling the starter motor. Next, step **280** involves notifying the user that the engine has been started. After step **280**, method **200** is terminated. Method **200** can be performed within a vehicle system such as system **10** illustrated in FIG. I and described herein.

[0035] For illustration purposes, method **200** will be described with respect to being performed within system **10**. Method **200** begins at step **210** with determining if a start command has been received from the remote transmitter. This step can be accomplished by processor **22** determining whether transceiver **36** has received a command from transmitter **50**. This step may involve processor **22** checking a registry in memory (not shown) in transceiver **36**. If a start command has not been received, method **200** starts over. If a

start command has been received, step **220** involves enabling the battery pulse voltage monitoring circuit. This step can be performed by processor **22** outputting a voltage signal to pulse monitoring circuit **24**. Step **230** next involves enabling the starter motor. This step can be performed by processor **22** outputting a voltage signal to starter enabling means **26**. Step **240** includes enabling the fuel pump circuit and the ignition circuit. This step can be performed by processor **22** outputting a voltage signal to fuel pump enabling means **28** and ignition circuit enabling means **30** to enable fuel pump **90** and ignition circuit **100** respectively. Processor **22** preferably enables the fuel pump circuit and the ignition circuit approximately 100 milliseconds after processor **22** outputs a voltage signal to starter enabling means **26**. After the fuel pump circuit and ignition circuit have been enabled, the vehicle engine will start within approximately 20 milliseconds.

[0036] Step **250** next involves detecting the battery pulsed voltage patterns. This step is performed by pulse monitoring circuit **24**. Step **260** involves determining whether the end of the first pulsed voltage pattern and the start of a second pulsed voltage pattern has been detected. To accomplish this step, pulse monitoring circuit **24** can compare the detected battery voltage pattern to voltage patterns stored within pulsed monitoring circuit **24**. Alternatively, pulse monitoring circuit **24** can send detected voltage patterns to processor **22**, and processor **22** can perform a comparison of the detected pattern with voltage pattern values stored in memory module **34**. If the end of the first pulsed voltage pattern and the start of the second pulsed voltage pattern is not detected, step **260** repeats. If the end of the first pulsed voltage pattern is detected and the start of a second pulsed voltage pattern is detected, step **270** involves disabling the starter motor. When pulse monitoring circuit **24** detects the change of these first and second pulsed patterns, it will then send a voltage signal to processor **22** to disengage starter motor **80** from the engine flywheel. Processor **22** then sends a signal to starter enabling means **26** to disengage starter motor **80** from the engine flywheel. Next, step **280** involves notifying the user that the engine has been started. This step can be accomplished by processor **22** causing transceiver **36** to output a signal to transmitter **50**. After step **280**, method **200** is terminated.

[0037] FIG. **5** shows a flow diagram of method **300** for controlling the operation of a vehicle using the preferred embodiment of the remote start confirmation and vehicle control system as connected within a vehicle. Method **300** begins at step **310** with determining whether the end of the first pulsed voltage pattern and the start of the second pulsed voltage pattern have been detected. If not, step **310** starts over. If so, step **320** involves disabling starter motor **80**. Next, step **330** involves the initiation of the monitoring of the vehicle's conditions. Step **340** involves detecting an occurrence of a vehicle condition. At this juncture, method **300** can either proceed with step **350** to terminate operation of the vehicle or method **300** can proceed with step **360** to notify the operator of the vehicle of the detection of an occurrence of a vehicle condition. If method **300** proceeds to step **350**, upon the completion of step **350** method **300** can proceed to step **360**. After step **360**, method **300** is terminated.

[0038] For illustration purposes, method **300** will be described with respect to the detection of an occurrence of a vehicle having a low fuel level, wherein method **300** is performed within system **10**. Method **300** begins at step **310** with determining whether the end of the first pulsed voltage pattern and the start of the second pulsed voltage have been detected. Step **310** can be performed similar to step **260** described above. If the end of the first pulsed voltage pattern and the start of the second pulsed voltage pattern have not been detected, step **310** starts over. If the change from the first pulsed voltage pattern to the second pulsed voltage pattern has been detected, step **320** involves disabling starter motor **80**. This step can be performed similar to step **270** as described above.

[0039] Next, step **330** involves the initiation of the monitoring of the vehicle's conditions. This step can be accomplished by processor **22** outputting a voltage signal to sensor monitoring circuit **32**. Next, step **340** involves detecting an occurrence of a vehicle condition. This step can be performed by processor **22** as set forth in the discussion of FIG. **6** below. Once an occurrence of a vehicle condition has been detected, method **300** can either proceed with step **350** to terminate operation of the vehicle, method **300** can proceed with step **360** to notify the operator of the vehicle of the detection of an occurrence of a vehicle condition, or method **300** can proceed to step **370** to perform an operation such as activating an audio or visual indicator. If method **300** proceeds to step **350**, upon the completion of step **350** method **300** can proceed to step **360**. At step **350**, processor **22** can terminate the operation of the vehicle by sending a voltage signal to either fuel pump enabling means **28** to disable fuel pump **90** or ignition circuit enabling means **30** to disable ignition circuit **100**. Step **360** can be accomplished by processor **22** causing transceiver **36** to output a signal to transmitter **50**. Step **360** can also involve causing processor **22** to perform an operation such as sending a signal to activate the at least one of vehicle's lights, including interior lights and headlights, the vehicle's horn, or both the lights and horn, to provide an audible and/or visual warning to the vehicle owner of an occurrence of an event. After step **360**, method **300** terminates.

[0040] FIG. **6** shows a flow diagram of step **340**. Step **340** includes step **342** of detecting values of the vehicle condition. Step **344** involves determining an acceptable range of stored values of the vehicle condition. Step **346** involves comparing the detected values with acceptable stored values. Step **348** involves determining whether the detected values fall outside of the range of accepted stored values. If not, step **340** starts over at step **342**. If so, step **349** shows that an occurrence of a vehicle condition has been detected.

[0041] For illustration purposes, step **340** will be described with respect to the detection of an occurrence of a vehicle having a low fuel level, wherein method **300** is performed within system **10**. Step **342** involves the detection of the current value of the vehicle condition, in this case, the current fuel level. This step can be accomplished by processor **22** obtaining the value of sensor **70** from sensor monitoring circuit **32** and storing the value in memory module **34**. Step **344** next involves determining the acceptable stored values for the fuel level. This step can be accomplished by processor **22** retrieving the acceptable fuel level values from memory module **34**. Next, step **346** involves comparing the detected fuel value with the acceptable fuel level values. This step can be accomplished by processor **22** performing a comparison logic function on the two values. Step **348** next involves determining whether the detected fuel level value falls outside of the range of acceptable fuel level values. This step can be accomplished by processor **22** as a result of the comparison performed in step **346**. If the fuel level value is not outside of the ranged of acceptable fuel level values, step **340** starts over at step **342**. If the fuel level value is outside of the range of

acceptable fuel level values, step **340** proceeds to step **349**, wherein processor **22** can store a value in memory **34** to indicate that a vehicle condition has been detected, confirming the detection of an occurrence of a vehicle condition.

[0042] This document describes the inventive devices and methods for remote start confirmation and monitoring of a vehicle. This is done for illustration purposes only. Neither the specific embodiments of the invention as a whole, nor those of its features limit the general principles underlying the invention. The invention is not limited to automotive uses. The specific features described herein may be used in some embodiments, but not in others, without departure from the spirit and scope of the invention as set forth. Many additional modifications are intended in the foregoing disclosure, and it will be appreciated by those of ordinary skill in the art that in some instances some features of the invention will be employed in the absence of a corresponding use of other features. The illustrative examples therefore do not define the metes and bounds of the invention and the legal protection afforded the invention, which function is served by the claims and their equivalents.

I claim:

1. A remote engine start confirmation and vehicle monitoring and control system for use in a vehicle having a battery, a starter, and an engine having a flywheel attached thereto, the system including a transmitter and a controller capable of receiving and processing signals from the transmitter to initiate a remote engine start procedure, the controller comprising:

a) means for detecting a first pulsed voltage pattern and a second pulsed voltage pattern across the resistance of the battery during a remote engine start procedure, the second pulsed voltage pattern having a higher frequency than the first pulsed voltage pattern;

b) means for signaling the disengagement of the starter from the flywheel after a detection of the termination of the first pulsed voltage pattern and the start of the second pulsed voltage pattern; and

c) means for initiating the monitoring of a vehicle condition after the detection of the termination of the first pulsed voltage pattern and the start of the second pulsed voltage pattern

whereby when a user remotely starts the vehicle engine via the transmitter, the means for detecting a first pulsed voltage pattern and a second pulsed voltage pattern across the resistance of the battery detects the termination of the first pulsed voltage pattern and the start of the second pulsed voltage pattern indicating that the engine has been started, the means for signaling the disengagement of the starter from the flywheel sends a signal to disengage the starter from the flywheel, and the means for initiating the monitoring of a vehicle condition initiates the monitoring of a vehicle condition.

2. The remote engine start confirmation and vehicle monitoring and control system of claim **1**, wherein the means for detecting a first pulsed voltage pattern and a second pulsed voltage pattern across the resistance of the battery is a monitoring circuit.

3. The remote engine start confirmation and vehicle monitoring and control system of claim **2**, wherein the monitoring circuit comprises an alternating current-voltage amplifying circuit connected in parallel with the battery.

4. The remote engine start confirmation and vehicle monitoring and control system of claim **3**, wherein the alternating current-voltage amplifying circuit includes a digital amplifier.

5. The remote engine start confirmation and vehicle monitoring and control system of claim **3**, wherein the alternating current-voltage amplifying circuit includes a transistor, at least one capacitor, and at least one resistor.

6. The remote engine start confirmation and vehicle monitoring and control system of claim **1**, wherein the means for signaling the disengagement of the starter from the flywheel after a detection of the termination of the first pulsed voltage pattern and the start of the second pulsed pattern is a processor operatively connected to the input of the starter.

7. The remote engine start confirmation and vehicle monitoring and control system of claim **1**, wherein the vehicle condition is engine temperature.

8. The remote engine start confirmation and vehicle monitoring and control system of claim **7**, wherein the means for initiating the monitoring of an engine condition after the detection of the termination of the first pulsed voltage pattern and the start of the second pulsed voltage pattern is a processor operatively connected to a vehicle temperature sensor.

9. The remote engine start confirmation and vehicle monitoring and control system of claim **1**, wherein the engine condition is fuel level.

10. The remote engine start confirmation and vehicle monitoring and control system of claim **9**, wherein the means for initiating the monitoring of a vehicle condition after the detection of the termination of the first pulsed voltage pattern and the start of the second pulsed voltage pattern is a processor operatively connected to a vehicle fuel sensor.

11. The remote engine start confirmation and vehicle monitoring and control system of claim **1**, wherein the vehicle condition is engine revolutions per minute.

12. The remote engine start confirmation and vehicle monitoring and control system of claim **11**, wherein the means for initiating the monitoring of an engine condition after the detection of the termination of the first pulsed voltage pattern and the start of the second pulsed voltage pattern is a processor operatively connected to a vehicle tachometer.

13. The remote engine start confirmation and vehicle monitoring and control system of claim **1** further comprising a means for initiating an engine start procedure.

14. The remote engine start confirmation and vehicle monitoring and control system of claim **13**, wherein the means for initiating an engine start procedure includes means for enabling a fuel pump, means for enabling an ignition, and means for enabling the starter.

15. A remote engine start confirmation and vehicle monitoring and control system for use in a vehicle having a battery, a fuel pump, an ignition, a starter, a safety system, a comfort system and an engine having a flywheel attached thereto, the system including a transmitter and a controller capable of receiving and processing signals from the transmitter, the controller comprising:

a) means for initiating an engine start procedure;

b) means for detecting a first pulsed voltage pattern and a second pulsed voltage pattern across the resistance of the battery during an engine start procedure, the second pulsed voltage pattern having a higher frequency than the first pulsed voltage pattern;

c) means for signaling the disengagement of the starter from the flywheel after a detection of the termination of the first pulsed voltage pattern and the start of the second pulsed voltage pattern; and

d) means for initiating the monitoring of a vehicle condition after the detection of the termination of the first pulsed voltage pattern and the start of the second pulsed voltage pattern

whereby when a user remotely starts the vehicle engine by use of the transmitter, the means for initiating an engine start procedure initiates the engine start procedure, the means for detecting a voltage pattern across the resistance of the battery detects the termination of the first pulsed voltage pattern and the start of the second pulsed voltage pattern indicating that the engine has been started, the means for signaling the disengagement of the starter from the flywheel sends a signal to disengage the starter from the flywheel, the means for initiating the monitoring of a vehicle condition initiates the monitoring of a vehicle condition.

16. The remote engine start confirmation and vehicle monitoring and control system of claim **15** further comprising means for enabling the safety system at the termination of the second pulsed voltage pattern.

17. The remote engine start confirmation and vehicle monitoring and control system of claim **15**, wherein the safety system is selected from the group consisting of a window defroster system, an airbag system, a passenger restraint system, and a vehicle collision warning system.

18. The remote engine start confirmation and vehicle monitoring and control system of claim **15** further comprising means for enabling the comfort system at the termination of the second pulsed voltage pattern.

19. The remote engine start confirmation and vehicle monitoring and control system of claim **15**, wherein the comfort system is a heating and air conditioning system.

20. The remote engine start confirmation and vehicle monitoring and control system of claim **15**, wherein the means for initiating an engine start procedure includes means for enabling a fuel pump, means for enabling an ignition, and means for enabling the starter.

21. The remote engine start confirmation and vehicle monitoring and control system of claim **15**, wherein the means for detecting a voltage pattern across the resistance of the battery is a monitoring circuit comprising an alternating current amplifier circuit connected in series with the battery.

22. The remote engine start confirmation and vehicle monitoring and control system of claim **21**, wherein the alternating current-voltage amplifier circuit is a digital amplifier circuit.

23. The remote engine start confirmation and vehicle monitoring and control system of claim **15**, wherein the means for signaling the disengagement of the starter from the flywheel after a detection of the termination of the first pulsed voltage pattern and the start of the second pulsed voltage pattern is a processor operatively connected to the input of the starter.

24. The remote engine start confirmation and vehicle monitoring and control system of claim **15**, wherein the vehicle condition is engine temperature and the means for initiating the monitoring of an engine condition after the detection of the termination of the first pulsed voltage pattern and the start of the second pulsed voltage pattern is a processor operatively connected to a vehicle temperature sensor.

25. The remote engine start confirmation and vehicle monitoring and control system of claim **15**, wherein the engine condition is fuel level and the means for initiating the monitoring of a vehicle condition after the detection of the termination of the first pulsed voltage pattern and the start of the second pulsed voltage pattern is a processor operatively connected to a vehicle fuel sensor.

26. The remote engine start confirmation and vehicle monitoring and control system of claim **15**, wherein the vehicle condition is engine revolutions per minute and the means for initiating the monitoring of an engine condition after the detection of the termination of the first pulsed voltage pattern and the start of the second pulsed voltage pattern is a processor operatively connected to a vehicle tachometer.

27. A remote engine start confirmation and vehicle monitoring and control system for use in a vehicle having a battery, a starter, and an engine having a flywheel attached thereto, the system including a transmitter and a controller capable of receiving and processing signals from the transmitter, the controller comprising:

a) a monitoring circuit for detecting a first pulsed voltage pattern and a second pulsed voltage pattern across the resistance of the battery during an engine start procedure, the second pulsed voltage pattern having a higher frequency than the first pulsed voltage pattern;

b) a signaling circuit for signaling the disengagement of the starter from the flywheel after a detection of the termination of the first pulsed voltage pattern and the start of the second pulsed voltage pattern; and

c) an initiation circuit for initiating the monitoring of a vehicle condition after the detection of the termination of the first pulsed voltage pattern and the start of the second pulsed voltage pattern

whereby when the monitoring circuit detects the termination of the first pulsed voltage pattern and the start of the second pulsed voltage pattern indicating that the engine has been started, then the signaling circuit sends a signal to disengage the starter from the flywheel and the initiation circuit initiates the monitoring of a vehicle condition.

28. A method for confirming the starting of a vehicle having a battery, a starter, and an engine having a flywheel attached thereto, the system including a transmitter and a controller, the method comprising the steps of:

a) detecting a first pulsed voltage pattern and a second pulsed voltage pattern across the resistance of the battery during an engine start procedure, the second pulsed voltage pattern having a higher frequency than the first pulsed voltage pattern; and

b) signaling the disengagement of the starter from the flywheel after a detection of the termination of the first pulsed voltage pattern and the start of the second pulsed voltage pattern.

29. The method for confirming the starting of a vehicle of claim **28** further comprising the step of notifying the user that the engine has been started.

30. The method for confirming the starting of a vehicle of claim **29**, wherein the step of notifying the user that the engine has been started includes the step of sending a signal to the transmitter.

31. A method for monitoring and controlling the operation of a vehicle having a battery, an ignition, a starter, and an engine having a flywheel attached thereto, the system including a transmitter and a controller capable of receiving and processing signals from the transmitter, the method comprising the steps of:

a) initiating a remote engine start procedure;
b) detecting a first pulsed voltage pattern and a second pulsed voltage pattern across the resistance of the battery during the engine start procedure, the second pulsed voltage pattern having a higher frequency than the first pulsed voltage pattern;
c) signaling the disengagement of the starter from the flywheel after a detection of the termination of the first pulsed voltage pattern and the start of the second pulsed voltage pattern;
d) initiating the monitoring of a vehicle condition after the detection of the termination of the first pulsed voltage pattern and the start of the second pulsed voltage pattern;
e) detecting an occurrence of a vehicle condition; and
f) performing an operation based on the detection of an occurrence of a vehicle condition.

32. The method for monitoring and controlling the operation of a vehicle of claim **31**, wherein the step of initiating a remote engine start procedure comprises the steps of:
a) enabling the starter motor
b) enabling the ignition; and
c) enabling the fuel pump.

33. The method for monitoring and controlling the operation of a vehicle of claim **31**, wherein the step of detecting an occurrence of a vehicle condition comprises the steps of:
a) detecting values of the vehicle condition;
b) determining a range of acceptable stored values associated with the vehicle condition;
c) comparing the range of acceptable stored values of the vehicle condition with the detected values of the vehicle condition; and
d) determining when the detected values are outside of the range of acceptable stored values.

34. The method for monitoring and controlling the operation of a vehicle of claim **33**, wherein the step of determining a range of acceptable stored values associated with a vehicle condition is accomplished by the controller monitoring and recording the values associated with the vehicle condition during normal operation of the vehicle.

35. The method for monitoring and controlling the operation of a vehicle of claim **31**, wherein the step of performing an operation based on the detection of a vehicle condition includes terminating the operation of the vehicle.

36. The method for monitoring and controlling the operation of a vehicle of claim **35**, wherein the step of terminating the operation of the vehicle includes stopping the fuel supply and to the engine.

37. The method for monitoring and controlling the operation of a vehicle of claim **35**, wherein the step of terminating the operation of the vehicle includes disabling the ignition.

38. The method for monitoring and controlling the operation of a vehicle of claim **31**, wherein the step of performing an operation based on the detection of a vehicle condition includes sending a signal to the transmitter to inform a user of the occurrence of a vehicle condition.

39. The method for monitoring and controlling the operation of a vehicle of claim **31**, wherein the step of performing an operation based on the detection of a vehicle condition includes activating an audio indicator.

40. The method for monitoring and controlling the operation of a vehicle of claim **39**, wherein the audio indicator is a vehicle horn or siren.

41. The method for monitoring and controlling the operation of a vehicle of claim **31**, wherein the step of performing an operation based on the detection of a vehicle condition includes activating a visual indicator.

42. The method for monitoring and controlling the operation of a vehicle of claim **39**, wherein the visual indicator is at least one light of the vehicle.

* * * * *