3GPP TS 36.104 V11.4.0 (2013-03)

Technical Specification

3rd Generation Partnership Project; Technical Specification Group Radio Access Network; Evolved Universal Terrestrial Radio Access (E-UTRA); Base Station (BS) radio transmission and reception (Release 11)

The present document has been developed within the 3rd Generation Partnership Project (3GPP TM) and may be further elaborated for the purposes of 3GPP.

The present document has not been subject to any approval process by the 3GPP Organizational Partners and shall not be implemented.
This Specification is provided for future development work within 3GPP only. The Organizational Partners accept no liability for any use of this Specification.
Specifications and reports for implementation of the 3GPP TM system should be obtained via the 3GPP Organizational Partners' Publications Offices.

ONEPLUS - EX. 1027
IPR2025-00762

Keywords
UMTS, BSS, radio

3GPP

Postal address

3GPP support office address
650 Route des Lucioles - Sophia Antipolis
Valbonne - FRANCE
Tel.: +33 4 92 94 42 00 Fax: +33 4 93 65 47 16

Internet
http://www.3gpp.org

Copyright Notification

No part may be reproduced except as authorized by written permission.
The copyright and the foregoing restriction extend to reproduction in all media.

© 2013, 3GPP Organizational Partners (ARIB, ATIS, CCSA, ETSI, TTA, TTC).
All rights reserved.

UMTS™ is a Trade Mark of ETSI registered for the benefit of its members
3GPP™ is a Trade Mark of ETSI registered for the benefit of its Members and of the 3GPP Organizational Partners
LTE™ is a Trade Mark of ETSI currently being registered for the benefit of its Members and of the 3GPP Organizational Partners
GSM® and the GSM logo are registered and owned by the GSM Association

ONEPLUS - EX. 1027

Contents

Foreword 7
1 Scope 8
2 References 8
3 Definitions, symbols and abbreviations 9
3.1 Definitions 9
3.2 Symbols 11
3.3 Abbreviations 12
4 General 14
4.1 Relationship between minimum requirements and test requirements 14
4.2 Base station classes 14
4.3 Regional requirements 14
4.4 Applicability of requirements 15
5 Operating bands and channel arrangement 16
5.1 General 16
5.2 Void 16
5.3 Void 16
5.4 Void 16
5.5 Operating bands 16
5.6 Channel bandwidth 19
5.7 Channel arrangement 21
5.7.1 Channel spacing 21
5.7.1A CA Channel spacing 21
5.7.2 Channel raster 21
5.7.3 Carrier frequency and EARFCN 21
5.8 Requirements for contiguous and non-contiguous spectrum 22
6 Transmitter characteristics 23
6.1 General 23
6.2 Base station output power 23
6.2.1 Minimum requirement 24
6.2.2 Additional requirement (regional) 24
6.2.3 Home BS output power for adjacent UTRA channel protection 24
6.2.4 Home BS output power for adjacent E-UTRA channel protection 25
6.2.5 Home BS Output Power for co-channel E-UTRA protection 26
6.3 Output power dynamics 27
6.3.1 RE Power control dynamic range 27
6.3.1.1 Minimum requirements 28
6.3.2 Total power dynamic range 28
6.3.2.1 Minimum requirements 28
6.4 Transmit ON/OFF power 28
6.4.1 Transmitter OFF power 28
6.4.1.1 Minimum Requirement 29
6.4.2 Transmitter transient period 29
6.4.2.1 Minimum requirements 29
6.5 Transmitted signal quality 29
6.5.1 Frequency error 29
6.5.1.1 Minimum requirement 30
6.5.2 Error Vector Magnitude 30
6.5.3 Time alignment error 30
6.5.3.1 Minimum Requirement 30
6.5.4 DL RS power 31
6.5.4.1 Minimum requirements 31
6.6 Unwanted emissions 31
6.6.1 Occupied bandwidth 31

ONEPLUS - EX. 1027

6.6.1.1 Minimum requirement ... 31
6.6.2 Adjacent Channel Leakage power Ratio (ACLR) ... 31
6.6.2.1 Minimum requirement ... 32
6.6.2.2 Cumulative ACLR requirement in non-contiguous spectrum ... 33
6.6.3 Operating band unwanted emissions ... 34
6.6.3.1 Minimum requirements for Wide Area BS (Category A) ... 36
6.6.3.2 Minimum requirements for Wide Area BS (Category B) ... 38
6.6.3.2.1 Category B requirements (Option 1) ... 38
6.6.3.2.2 Category B (Option 2) ... 40
6.6.3.2A Minimum requirements for Local Area BS (Category A and B) ... 41
6.6.3.2B Minimum requirements for Home BS (Category A and B) ... 42
6.6.3.2C Minimum requirements for Medium Range BS (Category A and B) ... 43
6.6.3.3 Additional requirements ... 45
6.6.4 Transmitter spurious emissions ... 48
6.6.4.1 Mandatory Requirements ... 48
6.6.4.1.1 Spurious emissions (Category A) ... 48
6.6.4.1.2 Spurious emissions (Category B) ... 49
6.6.4.2 Protection of the BS receiver of own or different BS ... 49
6.6.4.2.1 Minimum Requirement ... 49
6.6.4.3 Additional spurious emissions requirements ... 49
6.6.4.3.1 Minimum Requirement ... 50
6.6.4.4 Co-location with other base stations ... 58
6.6.4.4.1 Minimum Requirement ... 59
6.7 Transmitter intermodulation ... 65
6.7.1 Minimum requirement ... 65
6.7.2 Additional requirement for Band 41 ... 65

7 Receiver characteristics ... 66
7.1 General ... 66
7.2 Reference sensitivity level ... 66
7.2.1 Minimum requirement ... 66
7.3 Dynamic range ... 68
7.3.1 Minimum requirement ... 68
7.4 In-channel selectivity ... 70
7.4.1 Minimum requirement ... 70
7.5 Adjacent Channel Selectivity (ACS) and narrow-band blocking ... 72
7.5.1 Minimum requirement ... 72
7.6 Blocking ... 74
7.6.1 General blocking requirement ... 74
7.6.1.1 Minimum requirement ... 75
7.6.2 Co-location with other base stations ... 79
7.6.2.1 Minimum requirement ... 80
7.7 Receiver spurious emissions ... 85
7.7.1 Minimum requirement ... 85
7.8 Receiver intermodulation ... 86
7.8.1 Minimum requirement ... 86

8 Performance requirement ... 89
8.1 General ... 89
8.2 Performance requirements for PUSCH ... 90
8.2.1 Requirements in multipath fading propagation conditions ... 90
8.2.1.1 Minimum requirements ... 90
8.2.2 Requirements for UL timing adjustment ... 98
8.2.2.1 Minimum requirements ... 98
8.2.3 Requirements for high speed train ... 98
8.2.3.1 Minimum requirements ... 99
8.2.4 Requirements for HARQ-ACK multiplexed on PUSCH ... 100
8.2.4.1 Minimum requirement ... 100
8.3 Performance requirements for PUCCH ... 100
8.3.1 DTX to ACK performance ... 100
8.3.1.1 Minimum requirement ... 101
8.3.2 ACK missed detection requirements for single user PUCCH format 1a ... 101

ONEPLUS - EX. 1027

8.3.2.1 Minimum requirements 101
8.3.3 CQI performance requirements for PUCCH format 2 102
8.3.3.1 Minimum requirements 102
8.3.4 ACK missed detection requirements for multi user PUCCH format 1a 102
8.3.4.1 Minimum requirement 103
8.3.5 ACK missed detection requirements for PUCCH format 1b with Channel Selection 103
8.3.5.1 Minimum requirements 103
8.3.6 ACK missed detection requirements for PUCCH format 3 103
8.3.6.1 Minimum requirements 104
8.3.7 NAK to ACK requirements for PUCCH format 3 104
8.3.7.1 Minimum requirement 104
8.3.8 CQI performance requirements for PUCCH format 2 with DTX detection 105
8.3.8.1 Minimum requirements 105
8.4 Performance requirements for PRACH 105
8.4.1 PRACH False alarm probability 105
8.4.1.1 Minimum requirement 106
8.4.2 PRACH detection requirements 106
8.4.2.1 Minimum requirements 106

Annex A (normative): Reference measurement channels 107

A.1 Fixed Reference Channels for reference sensitivity and in-channel selectivity (QPSK, R=1/3) 107

A.2 Fixed Reference Channels for dynamic range (16QAM, R=2/3) 108

A.3 Fixed Reference Channels for performance requirements (QPSK 1/3) 108

A.4 Fixed Reference Channels for performance requirements (16QAM 3/4) 109

A.5 Fixed Reference Channels for performance requirements (64QAM 5/6) 109

A.6 PRACH Test preambles 109

A.7 Fixed Reference Channels for UL timing adjustment (Scenario 1) 110

A.8 Fixed Reference Channels for UL timing adjustment (Scenario 2) 110

A.9 Multi user PUCCH test 111

A.10 PUCCH transmission on two antenna ports test 111

Annex B (normative): Propagation conditions 112

B.1 Static propagation condition 112

B.2 Multi-path fading propagation conditions 112

B.3 High speed train condition 113

B.4 Moving propagation conditions 114

B.5 Multi-Antenna channel models 115
B.5.1 Definition of MIMO Correlation Matrices 115
B.5.2 MIMO Correlation Matrices at High, Medium and Low Level 116

ONEPLUS - EX. 1027

Annex C (normative): Characteristics of the interfering signals 119

Annex D (normative): Environmental requirements for the BS equipment 120

Annex E (normative): Error Vector Magnitude 121

E.1 Reference point for measurement 121

E.2 Basic unit of measurement 121

E.3 Modified signal under test 122

E.4 Estimation of frequency offset 122

E.5 Estimation of time offset 122

E.5.1 Window length 123

E.6 Estimation of TX chain amplitude and frequency response parameters 123

E.7 Averaged EVM 125

Annex F (Informative): Unwanted emission requirements for multi-carrier BS 126

F.1 General 126

F.2 Multi-carrier BS of different E-UTRA channel bandwidths 126

F.3 Multi-carrier BS of E-UTRA and UTRA 126

Annex G (Informative): Regional requirement for protection of DTT 127

Annex H (Informative): Change history 128

ONEPLUS - EX. 1027

Foreword

This Technical Specification has been produced by the 3rd Generation Partnership Project (3GPP).

The contents of the present document are subject to continuing work within the TSG and may change following formal TSG approval. Should the TSG modify the contents of the present document, it will be re-released by the TSG with an identifying change of release date and an increase in version number as follows:

Version x.y.z

where:

x the first digit:

1 presented to TSG for information;

2 presented to TSG for approval;

3 or greater indicates TSG approved document under change control.

y the second digit is incremented for all changes of substance, i.e. technical enhancements, corrections, updates, etc.

z the third digit is incremented when editorial only changes have been incorporated in the document.

ONEPLUS - EX. 1027

1 Scope

The present document establishes the minimum RF characteristics and minimum performance requirements of E-UTRA Base Station (BS).

2 References

The following documents contain provisions which, through reference in this text, constitute provisions of the present document.

- References are either specific (identified by date of publication, edition number, version number, etc.) or non-specific.
- For a specific reference, subsequent revisions do not apply.
- For a non-specific reference, the latest version applies. In the case of a reference to a 3GPP document (including a GSM document), a non-specific reference implicitly refers to the latest version of that document *in the same Release as the present document*.

[1] 3GPP TR 21.905: "Vocabulary for 3GPP Specifications".

[2] ITU-R Recommendation SM.329: "Unwanted emissions in the spurious domain".

[3] ITU-R Recommendation M.1545: "Measurement uncertainty as it applies to test limits for the terrestrial component of International Mobile Telecommunications-2000".

[4] 3GPP TS 36.141: "Evolved Universal Terrestrial Radio Access (E-UTRA); Base Station (BS) conformance testing".

[5] ITU-R recommendation SM.328: "Spectra and bandwidth of emissions".

[6] 3GPP TS 25.104: "Base Station (BS) radio transmission and reception (FDD)".

[7] 3GPP TS 25.105: "Base Station (BS) radio transmission and reception (TDD)".

[8] 3GPP TR 25.942: "RF system scenarios".

[9] 3GPP TR 36.942: "E-UTRA RF system scenarios".

[10] 3GPP TS 36.211: "Evolved Universal Terrestrial Radio Access (E-UTRA); Physical Channels and Modulation".

[11] 3GPP TS 36.213: "Evolved Universal Terrestrial Radio Access (E-UTRA); Physical layer procedures".

[12] ECC/DEC/(09)03 “Harmonised conditions for MFCN in the band 790-862 MHz”, 30 Oct. 2009

[13] IEC 60721-3-3 (2002): "Classification of environmental conditions - Part 3: Classification of groups of environmental parameters and their severities - Section 3: Stationary use at weather protected locations".

[14] IEC 60721-3-4 (1995): "Classification of environmental conditions - Part 3: Classification of groups of environmental parameters and their severities - Section 4: Stationary use at non-weather protected locations".

[15] 3GPP TS 37.104: "E-UTRA, UTRA and GSM/EDGE; Multi-Standard Radio (MSR) Base Station (BS) radio transmission and reception ".

ONEPLUS - EX. 1027

3 Definitions, symbols and abbreviations

3.1 Definitions

For the purposes of the present document, the terms and definitions given in TR 21.905 [1] and the following apply. A term defined in the present document takes precedence over the definition of the same term, if any, in TR 21.905 [1].

Aggregated Channel Bandwidth: The RF bandwidth in which a Base Station transmits and receives multiple contiguously aggregated carriers. The aggregated channel bandwidth is measured in MHz.

Base station receive period: The time during which the base station is receiving data subframes or UpPTS.

Base Station RF Bandwidth: The bandwidth in which a Base Station transmits and receives multiple carriers within an operating band.

Base Station RF bandwidth edge: The frequency of one of the edges of the Base Station RF bandwidth.

Carrier: The modulated waveform conveying the E-UTRA or UTRA physical channels

Carrier aggregation: aggregation of two or more component carriers in order to support wider transmission bandwidths

Carrier aggregation band: a set of one or more operating bands across which multiple carriers are aggregated with a specific set of technical requirements.

NOTE: Carrier aggregation band(s) for an E-UTRA BS is declared by the manufacturer according to the designations in Tables 5.5-2 to 5.5-3

Channel bandwidth: The RF bandwidth supporting a single E-UTRA RF carrier with the transmission bandwidth configured in the uplink or downlink of a cell. The channel bandwidth is measured in MHz and is used as a reference for transmitter and receiver RF requirements.

Channel edge: The lowest and highest frequency of the E-UTRA carrier, separated by the channel bandwidth.

Contiguous carriers: a set of two or more carriers configured in a spectrum block where there are no RF requirements based on co-existence for un-coordinated operation within the spectrum block.

Contiguous spectrum: Spectrum consisting of a contiguous block of spectrum with no sub-block gaps.

DL RS power: The resource element power of Downlink Reference Symbol.

Downlink operating band: The part of the operating band designated for downlink.

Highest Carrier: The carrier with the highest carrier centre frequency transmitted/received in a specified operating band.

Inter-band carrier aggregation: carrier aggregation of component carriers in different operating bands**.**

NOTE: Carriers aggregated in each band can be contiguous or non-contiguous.

Intra-band contiguous carrier aggregation: contiguous carriers aggregated in the same operating band.

Intra-band non-contiguous carrier aggregation: non-contiguous carriers aggregated in the same operating band.

Lower Edge: The lowest frequency in the Base Station RF Bandwidth, or the lowest frequency in the channel bandwidth of a single E-UTRA carrier; used as a frequency reference point for transmitter and receiver requirements.

Lower sub-block edge: The frequency at the lower edge of one sub-block. It is used as a frequency reference point for both transmitter and receiver requirements.

Lowest Carrier: The carrier with the lowest carrier centre frequency transmitted/received in a specified operating band.

Maximum output Power: The mean power level per carrier of the base station measured at the antenna connector in a specified reference condition.

ONEPLUS - EX. 1027

Maximum throughput: The maximum achievable throughput for a reference measurement channel.

Mean power: When applied to E-UTRA transmission this is the power measured in the channel bandwidth of the carrier. The period of measurement shall be at least one subframe (1ms), unless otherwise stated.

Measurement bandwidth: The bandwidth in which an emission level is specified.

Multi-carrier transmission configuration: A set of one or more contiguous or non-contiguous carriers that a BS is able to transmit simultaneously according to the manufacturer's specification.

Non-contiguous spectrum: Spectrum consisting of two or more sub-blocks separated by sub-block gap(s).

Occupied bandwidth: The width of a frequency band such that, below the lower and above the upper frequency limits, the mean powers emitted are each equal to a specified percentage $\beta/2$ of the total mean power of a given emission.

Operating band: A frequency range in which E-UTRA operates (paired or unpaired), that is defined with a specific set of technical requirements**.**

NOTE: The operating band(s) for an E-UTRA BS is declared by the manufacturer according to the designations in table 5.5-1.

Output power: The mean power of one carrier of the base station, delivered to a load with resistance equal to the nominal load impedance of the transmitter.

Rated output power: Rated output power of the base station is the mean power level per carrier that the manufacturer has declared to be available at the antenna connector during the transmitter ON period.

RE power control dynamic range: The difference between the power of a RE and the average RE power for a BS at maximum output power for a specified reference condition.

RRC filtered mean power: The mean power of a UTRA carrier as measured through a root raised cosine filter with roll-off factor α and a bandwidth equal to the chip rate of the radio access mode.

NOTE 1: The RRC filtered mean power of a perfectly modulated UTRA signal is 0.246 dB lower than the mean power of the same signal.

Sub-block: This is one contiguous allocated block of spectrum for transmission and reception by the same Base Station. There may be multiple instances of sub-blocks within an RF bandwidth.

Sub-block bandwidth: The bandwidth of one sub-block.

Sub-block gap: A frequency gap between two consecutive sub-blocks within an RF bandwidth, where the RF requirements in the gap are based on co-existence for un-coordinated operation.

Synchronized operation: Operation of TDD in two different systems, where no simultaneous uplink and downlink occur.

Throughput: The number of payload bits successfully received per second for a reference measurement channel in a specified reference condition.

Total power dynamic range: The difference between the maximum and the minimum transmit power of an OFDM symbol for a specified reference condition.

Transmission bandwidth: Bandwidth of an instantaneous transmission from a UE or BS, measured in Resource Block units.

Transmission bandwidth configuration: The highest transmission bandwidth allowed for uplink or downlink in a given channel bandwidth, measured in Resource Block units.

Transmitter ON period: The time period during which the BS transmitter is transmitting data and/or reference symbols, i.e. data subframes or DwPTS.

Transmitter OFF period: The time period during which the BS transmitter is not allowed to transmit.

Transmitter transient period: The time period during which the transmitter is changing from the OFF period to the ON period or vice versa.

ONEPLUS - EX. 1027

Unsynchronized operation: Operation of TDD in two different systems, where the conditions for synchronized operation are not met.

Uplink operating band: The part of the operating band designated for uplink.

Upper Edge: The highest frequency in the Base Station RF Bandwidth or the highest frequency in the channel bandwidth of a single E-UTRA carrier; used as a frequency reference point for transmitter and receiver requirements.

Upper sub-block edge: The frequency at the upper edge of one sub-block. It is used as a frequency reference point for both transmitter and receiver requirements.

3.2 Symbols

For the purposes of the present document, the following symbols apply:

α	Roll-off factor
β	Percentage of the mean transmitted power emitted outside the occupied bandwidth on the assigned channel
$BW_{Channel}$	Channel bandwidth
$BW_{Channel_CA}$	Aggregated channel bandwidth, expressed in MHz. $BW_{Channel_CA} = F_{edge_high} - F_{edge_low}$.
$BW_{Channel,block}$	Sub-block bandwidth, expressed in MHz. $BW_{Channel,block} = F_{edge,block,high} - F_{edge,block,low}$.
BW_{Config}	Transmission bandwidth configuration, expressed in MHz, where $BW_{Config} = N_{RB}$ x 180 kHz in the uplink and BW_{Config} = 15 kHz + N_{RB} x 180 kHz in the downlink.
CA_X	Contiguous intra-band CA for band X where X is the applicable E-UTRA operating band
CA_X_X	Non-contiguous intra band CA for band X where X is the applicable E-UTRA operating band
CA_X-Y	CA for band X and Band Y where X and Y are the applicable E-UTRA operating band
f	Frequency
Δf	Separation between the channel edge frequency and the nominal -3dB point of the measuring filter closest to the carrier frequency
Δf_{max}	The largest value of Δf used for defining the requirement
F_C	Carrier centre frequency
$F_{C,block,\ high}$	Center frequency of the highest transmitted/received carrier in a sub-block.
$F_{C,block,\ low}$	Center frequency of the lowest transmitted/received carrier in a sub-block.
F_{C_low}	The carrier centre frequency of the lowest carrier, expressed in MHz.
F_{C_high}	The carrier centre frequency of the highest carrier, expressed in MHz.
F_{edge_low}	The lower edge of aggregated channel bandwidth, expressed in MHz. $F_{edge_low} = F_{C_low} - F_{offset}$.
F_{edge_high}	The upper edge of aggregated channel bandwidth, expressed in MHz. $F_{edge_high} = F_{C_high} + F_{offset}$.
$F_{edge,block,low}$	The lower sub-block edge, where $F_{edge,block,low} = F_{C,block,low} - F_{offset}$.
$F_{edge,block,high}$	The upper sub-block edge, where $F_{edge,block,high} = F_{C,block,high} + F_{offset}$.
F_{offset}	Frequency offset from F_{C_high} to the upper edge or from $F_{C,block,\ high}$ to the upper sub-block edge, or F_{C_low} to the lower edge or from $F_{C,block,\ low}$ to the lower sub-block edge.
F_{filter}	Filter centre frequency
f_offset	Separation between the channel edge frequency and the centre of the measuring filter
f_offset_{max}	The maximum value of f_offset used for defining the requirement
F_{DL_low}	The lowest frequency of the downlink operating band
F_{DL_high}	The highest frequency of the downlink operating band
F_{UL_low}	The lowest frequency of the uplink operating band
F_{UL_high}	The highest frequency of the uplink operating band
G_{ant}	Net antenna gain
N_{ant}	Number of transmitter antennas
N_{DL}	Downlink EARFCN
$N_{Offs-DL}$	Offset used for calculating downlink EARFCN
$N_{Offs-UL}$	Offset used for calculating uplink EARFCN
N_{CS}	Number of Cyclic shifts for preamble generation in PRACH
N_{RB}	Transmission bandwidth configuration, expressed in units of resource blocks
N_{UL}	Uplink EARFCN
P_{10MHz}	Maximum output Power within 10 MHz
$P_{EIRP,N}$	EIRP level for channel N
$P_{EIRP,N,MAX}$	Maximum EIRP level for channel N

ONEPLUS - EX. 1027

$P_{EM,N}$	Declared emission level for channel N
Pmax	Maximum total output Power
Pmax, c	Maximum carrier output power
Pout	Output power
$P_{REFSENS}$	Reference Sensitivity power level
T_A	Timing advance command, as defined in [11]
T_s	Basic time unit, as defined in [10]
W_{gap}	Sub-block gap size

3.3 Abbreviations

For the purposes of the present document, the abbreviations given in TR 21.905 [1] and the following apply. An abbreviation defined in the present document takes precedence over the definition of the same abbreviation, if any, in TR 21.905 [1].

ACLR	Adjacent Channel Leakage Ratio
ACK	Acknowledgement (in HARQ protocols)
ACS	Adjacent Channel Selectivity
AWGN	Additive White Gaussian Noise
BS	Base Station
CA	Carrier Aggregation
CACLR	Cumulative ACLR
CP	Cyclic prefix
CRC	Cyclic Redundancy Check
CW	Continuous Wave
DC	Direct Current
DFT	Discrete Fourier Transformation
DTT	Digital Terrestrial Television
DTX	Discontinuous Transmission
DwPTS	Downlink part of the special subframe (for TDD operation)
EARFCN	E-UTRA Absolute Radio Frequency Channel Number
EPA	Extended Pedestrian A model
ETU	Extended Typical Urban model
E-UTRA	Evolved UTRA
EVA	Extended Vehicular A model
EVM	Error Vector Magnitude
FDD	Frequency Division Duplex
FFT	Fast Fourier Transformation
FRC	Fixed Reference Channel
GP	Guard Period (for TDD operation)
HARQ	Hybrid Automatic Repeat Request
ICS	In-Channel Selectivity
ITU-R	Radiocommunication Sector of the ITU
LA	Local Area
LNA	Low Noise Amplifier
MCS	Modulation and Coding Scheme
MR	Medium Range
OFDM	Orthogonal Frequency Division Multiplex
OOB	Out-of-band
PA	Power Amplifier
PBCH	Physical Broadcast Channel
PDCCH	Physical Downlink Control Channel
PDSCH	Physical Downlink Shared Channel
PUSCH	Physical Uplink Shared Channel
PUCCH	Physical Uplink Control Channel
PRACH	Physical Random Access Channel
QAM	Quadrature Amplitude Modulation
QPSK	Quadrature Phase-Shift Keying
RAT	Radio Access Technology
RB	Resource Block

ONEPLUS - EX. 1027

RE	Resource Element
RF	Radio Frequency
RMS	Root Mean Square (value)
RS	Reference Symbol
RX	Receiver
RRC	Root Raised Cosine
SNR	Signal-to-Noise Ratio
TA	Timing Advance
TDD	Time Division Duplex
TX	Transmitter
UE	User Equipment
WA	Wide Area

ONEPLUS - EX. 1027

4 General

4.1 Relationship between minimum requirements and test requirements

The Minimum Requirements given in this specification make no allowance for measurement uncertainty. The test specification TS 36.141 [4] Annex G defines Test Tolerances. These Test Tolerances are individually calculated for each test. The Test Tolerances are used to relax the Minimum Requirements in this specification to create Test Requirements.

The measurement results returned by the Test System are compared - without any modification - against the Test Requirements as defined by the shared risk principle.

The Shared Risk principle is defined in ITU-R M.1545 [3].

4.2 Base station classes

The requirements in this specification apply to Wide Area Base Stations, Medium Range Base Stations, Local Area Base Stations and Home Base Stations unless otherwise stated.

Wide Area Base Stations are characterised by requirements derived from Macro Cell scenarios with a BS to UE minimum coupling loss equal to 70 dB. The Wide Area Base Station class has the same requirements as the base station for General Purpose application in Release 8.

Medium Range Base Stations are characterised by requirements derived from Micro Cell scenarios with a BS to UE minimum coupling loss equals to 53 dB.

Local Area Base Stations are characterised by requirements derived from Pico Cell scenarios with a BS to UE minimum coupling loss equal to 45 dB.

Home Base Stations are characterised by requirements derived from Femto Cell scenarios.

4.3 Regional requirements

Some requirements in the present document may only apply in certain regions either as optional requirements or set by local and regional regulation as mandatory requirements. It is normally not stated in the 3GPP specifications under what exact circumstances that the requirements apply, since this is defined by local or regional regulation.

Table 4.3-1 lists all requirements that may be applied differently in different regions.

ONEPLUS - EX. 1027

Table 4.3-1: List of regional requirements

Clause number	Requirement	Comments
5.5	Operating bands	Some bands may be applied regionally.
5.6	Channel bandwidth	Some channel bandwidths may be applied regionally.
5.7	Channel arrangement	The requirement is applied according to what operating bands in clause 5.5 that are supported by the BS.
6.2	Base station maximum output power	In certain regions, the minimum requirement for normal conditions may apply also for some conditions outside the range of conditions defined as normal.
6.2.2	Additional requirement (regional)	For Band 34 and Band 41 operation in certain regions, the rated output power declared by the manufacturer shall be less than or equal to the values specified in Table 6.2.2-1 and 6.2.2-2, respectively.
6.6.3.1	Operating band unwanted emissions (Category A)	This requirement is mandatory for regions where Category A limits for spurious emissions, as defined in ITU-R Recommendation SM.329 [2] apply.
6.6.3.2	Operating band unwanted emissions (Category B)	This requirement is mandatory for regions where Category B limits for spurious emissions, as defined in ITU-R Recommendation SM.329 [2], apply.
6.6.3.3	Additional requirements	These requirements may apply in certain regions as additional Operating band unwanted emission limits.
6.6.4.1.1	Spurious emissions (Category A)	This requirement is mandatory for regions where Category A limits for spurious emissions, as defined in ITU-R Recommendation SM.329 [2] apply.
6.6.4.1.2	Spurious emissions (Category B)	This requirement is mandatory for regions where Category B limits for spurious emissions, as defined in ITU-R Recommendation SM.329 [2], apply.
6.6.4.3	Additional spurious emission requirements	These requirements may be applied for the protection of system operating in frequency ranges other than the E-UTRA BS operating band.
6.6.4.4	Co-location with other base stations	These requirements may be applied for the protection of other BS receivers when a BS operating in another frequency band is co-located with an E-UTRA BS.
6.7.2	Additional requirements	These requirements may apply in certain regions.
7.6.2	Co-location with other base stations	These requirements may be applied for the protection of the BS receiver when a BS operating in another frequency band is co-located with an E-UTRA BS.

4.4 Applicability of requirements

For BS that is E-UTRA (single-RAT) capable only, the requirements in the present document are applicable and additional conformance to TS 37.104 [15] is optional. For a BS additionally conforming to TS 37.104 [15], conformance to some of the RF requirements in the present document can be demonstrated through the corresponding requirements in TS 37.104 [15] as listed in Table 4.4-1.

Table 4.4-1: Alternative RF minimum requirements for a BS additionally conforming to TS 37.104 [15]

RF requirement	Clause in the present document	Alternative clause in TS 37.104 [15]
Base station output power	6.2.1 6.2.2	6.2.1 6.2.2
Transmit ON/OFF power	6.4	6.4
Unwanted emissions		
Transmitter spurious emissions	6.6.4	6.6.1 (except for 6.6.1.1.3)
Operating band unwanted emissions	6.6.3.1, 6.6.3.2 (NOTE 1)	6.6.2 (except for 6.6.2.3 and 6.6.2.4)
Transmitter intermodulation	6.7	6.7.1
Narrowband blocking	7.5.1	7.4.2
Blocking	7.6.1.1	7.4.1
Out-of-band blocking	7.6.1.1	7.5.1
Co-location with other base stations	7.6.2.1	7.5.2
Receiver spurious emissions	7.7.1	7.6.1
Intermodulation	7.8.1	7.7.1
Narrowband intermodulation	7.8.1	7.7.2
NOTE 1: This does not apply when the lowest or highest carrier frequency is configured as 1.4 or 3 MHz carrier in bands of Band Category 1 or 3 according to clause 4.5 in TS 37.104 [15].		

ONEPLUS - EX. 1027

5 Operating bands and channel arrangement

5.1 General

The channel arrangements presented in this clause are based on the operating bands and channel bandwidths defined in the present release of specifications.

NOTE: Other operating bands and channel bandwidths may be considered in future releases.

5.2 Void

5.3 Void

5.4 Void

5.5 Operating bands

E-UTRA is designed to operate in the operating bands defined in Table 5.5-1.

ONEPLUS - EX. 1027

Table 5.5-1 E-UTRA frequency bands

E-UTRA Operating Band	Uplink (UL) operating band BS receive UE transmit	Downlink (DL) operating band BS transmit UE receive	Duplex Mode
	F_{UL_low} – F_{UL_high}	F_{DL_low} – F_{DL_high}	
1	1920 MHz – 1980 MHz	2110 MHz – 2170 MHz	FDD
2	1850 MHz – 1910 MHz	1930 MHz – 1990 MHz	FDD
3	1710 MHz – 1785 MHz	1805 MHz – 1880 MHz	FDD
4	1710 MHz – 1755 MHz	2110 MHz – 2155 MHz	FDD
5	824 MHz – 849 MHz	869 MHz – 894MHz	FDD
6[1]	830 MHz – 840 MHz	875 MHz – 885 MHz	FDD
7	2500 MHz – 2570 MHz	2620 MHz – 2690 MHz	FDD
8	880 MHz – 915 MHz	925 MHz – 960 MHz	FDD
9	1749.9 MHz – 1784.9 MHz	1844.9 MHz – 1879.9 MHz	FDD
10	1710 MHz – 1770 MHz	2110 MHz – 2170 MHz	FDD
11	1427.9 MHz – 1447.9 MHz	1475.9 MHz – 1495.9 MHz	FDD
12	699 MHz – 716 MHz	729 MHz – 746 MHz	FDD
13	777 MHz – 787 MHz	746 MHz – 756 MHz	FDD
14	788 MHz – 798 MHz	758 MHz – 768 MHz	FDD
15	Reserved	Reserved	FDD
16	Reserved	Reserved	FDD
17	704 MHz – 716 MHz	734 MHz – 746 MHz	FDD
18	815 MHz – 830 MHz	860 MHz – 875 MHz	FDD
19	830 MHz – 845 MHz	875 MHz – 890 MHz	FDD
20	832 MHz – 862 MHz	791 MHz – 821 MHz	
21	1447.9 MHz – 1462.9 MHz	1495.9 MHz – 1510.9 MHz	FDD
22	3410 MHz – 3490 MHz	3510 MHz – 3590 MHz	FDD
23	2000 MHz – 2020 MHz	2180 MHz – 2200 MHz	FDD
24	1626.5 MHz – 1660.5 MHz	1525 MHz – 1559 MHz	FDD
25	1850 MHz – 1915 MHz	1930 MHz – 1995 MHz	FDD
26	814 MHz – 849 MHz	859 MHz – 894 MHz	FDD
27	807 MHz – 824 MHz	852 MHz – 869 MHz	FDD
28	703 MHz – 748 MHz	758 MHz – 803 MHz	FDD
29	N/A	717 MHz – 728 MHz	FDD[2]
...			
33	1900 MHz – 1920 MHz	1900 MHz – 1920 MHz	TDD
34	2010 MHz – 2025 MHz	2010 MHz – 2025 MHz	TDD
35	1850 MHz – 1910 MHz	1850 MHz – 1910 MHz	TDD
36	1930 MHz – 1990 MHz	1930 MHz – 1990 MHz	TDD
37	1910 MHz – 1930 MHz	1910 MHz – 1930 MHz	TDD
38	2570 MHz – 2620 MHz	2570 MHz – 2620 MHz	TDD
39	1880 MHz – 1920 MHz	1880 MHz – 1920 MHz	TDD
40	2300 MHz – 2400 MHz	2300 MHz – 2400 MHz	TDD
41	2496 MHz – 2690 MHz	2496 MHz – 2690 MHz	TDD
42	3400 MHz – 3600 MHz	3400 MHz – 3600 MHz	TDD
43	3600 MHz – 3800 MHz	3600 MHz – 3800 MHz	TDD
44	703 MHz – 803 MHz	703 MHz – 803 MHz	TDD

Note 1: Band 6 is not applicable.
Note 2: Restricted to E-UTRA operation when carrier aggregation is configured. The downlink operating band is paired with the uplink operating band (external) of the carrier aggregation configuration that is supporting the configured Pcell.

E-UTRA is designed to operate for the carrier aggregation bands defined in Tables 5.5-2 to 5.5-4.

ONEPLUS - EX. 1027

Table 5.5-2. Intra-band contiguous carrier aggregation bands

CA Band	E-UTRA operating band
CA_1	1
CA_7	7
CA_38	38
CA_40	40
CA_41	41

Table 5.5-3. Inter-band carrier aggregation bands

CA Band	E-UTRA operating bands
CA_1-5	1
	5
CA_1-18	1
	18
CA_1-19	1
	19
CA_1-21	1
	21
CA_2-17	2
	17
CA 2-29	2
	29
CA_3-5	3
	5
CA_3-7	3
	7
CA_3-8	3
	8
CA_3-20	3
	20
CA_4-5	4
	5
CA_4-7	4
	7
CA_4-12	4
	12
CA_4-13	4
	13
CA_4-17	4
	17
CA 4-29	4
	29
CA_5-12	5
	12
CA_5-17	5
	17
CA_7-20	7
	20
CA_8-20	8
	20
CA_11-18	11
	18

ONEPLUS - EX. 1027

Table 5.5-4. Intra-band non-contiguous carrier aggregation bands

CA Band	E-UTRA operating band
CA_X-X	X
Editor's note: This table is a placeholder. X are FFS, to be replaced with the approved non-contiguous intra band carrier aggregation bands.	

5.6 Channel bandwidth

Requirements in present document are specified for the channel bandwidths listed in Table 5.6-1.

Table 5.6-1 Transmission bandwidth configuration N_{RB} in E-UTRA channel bandwidths

Channel bandwidth $BW_{Channel}$ [MHz]	1.4	3	5	10	15	20
Transmission bandwidth configuration N_{RB}	6	15	25	50	75	100

Figure 5.6-1 shows the relation between the Channel bandwidth ($BW_{Channel}$) and the Transmission bandwidth configuration (N_{RB}). The channel edges are defined as the lowest and highest frequencies of the carrier separated by the channel bandwidth, i.e. at F_C +/- $BW_{Channel}$ /2.

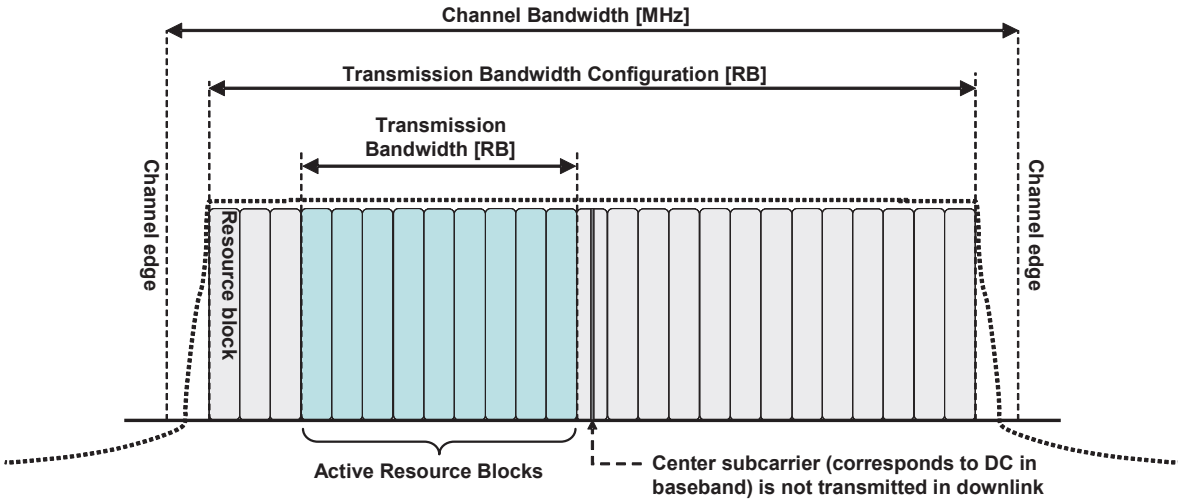

Figure 5.6-1 Definition of Channel Bandwidth and Transmission Bandwidth Configuration for one E-UTRA carrier

Figure 5.6-2 illustrates the aggregated channel bandwidth for intra-band carrier aggregation.

ONEPLUS - EX. 1027

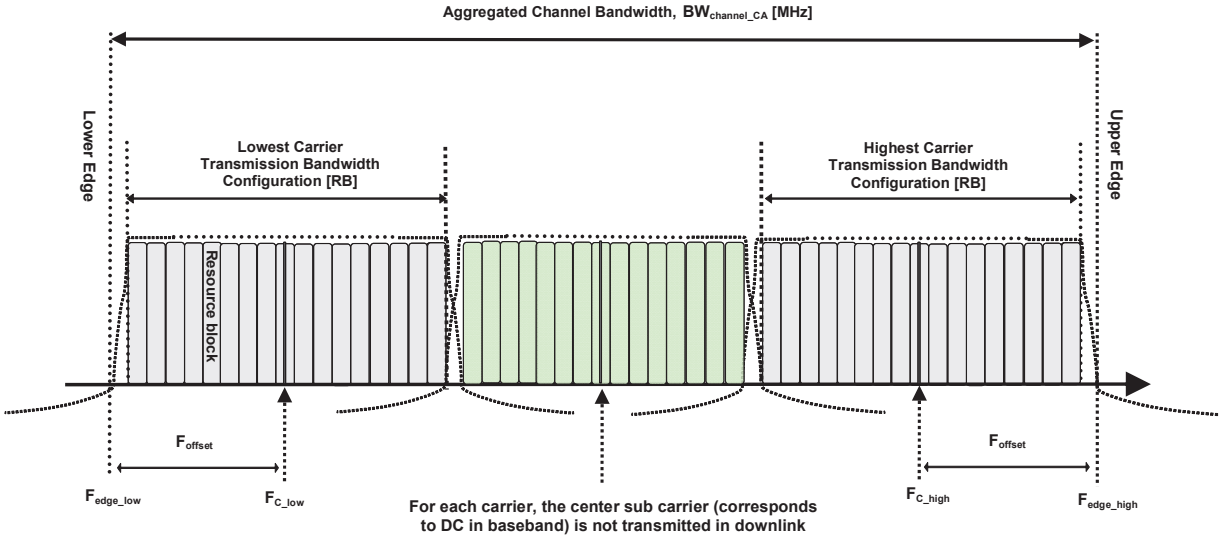

Figure 5.6-2 Definition of Aggregated Channel Bandwidth for intra-band carrier aggregation

The lower edge of the Aggregated Channel Bandwidth ($BW_{Channel_CA}$) is defined as $F_{edge_low} = F_{C_low} - F_{offset}$. The upper edge of the aggregated channel bandwidth is defined as $F_{edge_high} = F_{C_high} + F_{offset}$. The Aggregated Channel Bandwidth, $BW_{Channel_CA}$, is defined as follows:

$$BW_{Channel_CA} = F_{edge_high} - F_{edge_low} \text{ [MHz]}$$

Figure 5.6-3 illustrates the sub-block bandwidth for a BS operating in non-contiguous spectrum

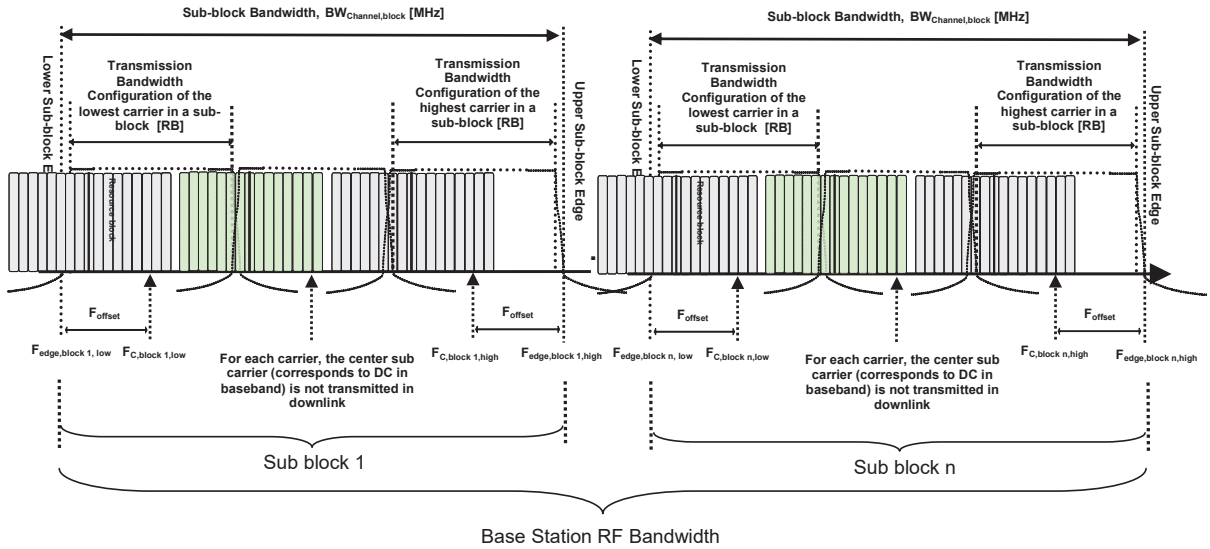

Figure 5.6-3 Definition of Sub-block Bandwidth for intra-band non-contiguous spectrum

The lower sub-block edge of the Sub-block Bandwidth ($BW_{Channel,block}$) is defined as $F_{edge,block,\ low} = F_{C,block,low} - F_{offset}$. The upper sub-block edge of the Sub-block Bandwidth is defined as $F_{edge,block,high} = F_{C,block,high} + F_{offset}$. The Sub-block Bandwidth, $BW_{Channel,block}$, is defined as follows:

$$BW_{Channel,block} = F_{edge,block,high} - F_{edge,block,low} \text{ [MHz]}$$

ONEPLUS - EX. 1027

F_{offset} is defined in Table 5.6-2 below where $BW_{Channel}$ is defined in Table 5.6-1.

Table 5.6-2: Definition of F_{offset}

Channel Bandwidth of the Lowest or Highest Carrier: $BW_{Channel}$[MHz]	F_{offset}[MHz]
5, 10, 15, 20	$BW_{Channel}/2$

NOTE 1: F_{offset} is calculated separately for the Lower Edge/Lower Sub-block Edge and the Upper Edge/Upper Sub-block Edge of the Aggregated Channel Bandwidth/Sub-block Bandwidth.

NOTE 2: The values of $BW_{Channel_CA}/BW_{Channel,block}$ for UE and BS are the same if the channel bandwidths of lowest and the highest component carriers are identical.

5.7 Channel arrangement

5.7.1 Channel spacing

The spacing between carriers will depend on the deployment scenario, the size of the frequency block available and the channel bandwidths. The nominal channel spacing between two adjacent E-UTRA carriers is defined as following:

$$\text{Nominal Channel spacing} = (BW_{Channel(1)} + BW_{Channel(2)})/2$$

where $BW_{Channel(1)}$ and $BW_{Channel(2)}$ are the channel bandwidths of the two respective E-UTRA carriers. The channel spacing can be adjusted to optimize performance in a particular deployment scenario.

5.7.1A CA Channel spacing

For intra-band contiguously aggregated carriers the channel spacing between adjacent component carriers shall be multiple of 300 kHz.

The nominal channel spacing between two adjacent aggregated E-UTRA carriers is defined as follows:

$$\text{Nominal channel spacing} = \left\lfloor \frac{BW_{Channel(1)} + BW_{Channel(2)} - 0.1\left|BW_{Channel(1)} - BW_{Channel(2)}\right|}{0.6} \right\rfloor 0.3$$

where $BW_{Channel(1)}$ and $BW_{Channel(2)}$ are the channel bandwidths of the two respective E-UTRA component carriers according to Table 5.6-1 with values in MHz. The channel spacing for intra-band contiguous carrier aggregation can be adjusted to any multiple of 300 kHz less than the nominal channel spacing to optimize performance in a particular deployment scenario.

5.7.2 Channel raster

The channel raster is 100 kHz for all bands, which means that the carrier centre frequency must be an integer multiple of 100 kHz.

5.7.3 Carrier frequency and EARFCN

The carrier frequency in the uplink and downlink is designated by the E-UTRA Absolute Radio Frequency Channel Number (EARFCN) in the range 0 - 65535. The relation between EARFCN and the carrier frequency in MHz for the downlink is given by the following equation, where F_{DL_low} and $N_{Offs-DL}$ are given in table 5.7.3-1 and N_{DL} is the downlink EARFCN.

$$F_{DL} = F_{DL_low} + 0.1(N_{DL} - N_{Offs-DL})$$

The relation between EARFCN and the carrier frequency in MHz for the uplink is given by the following equation where F_{UL_low} and $N_{Offs-UL}$ are given in table 5.7.3-1 and N_{UL} is the uplink EARFCN.

ONEPLUS - EX. 1027

$$F_{UL} = F_{UL_low} + 0.1(N_{UL} - N_{Offs\text{-}UL})$$

Table 5.7.3-1: E-UTRA channel numbers

E-UTRA Operating Band	Downlink			Uplink		
	F_{DL_low} [MHz]	$N_{Offs\text{-}DL}$	Range of N_{DL}	F_{UL_low} [MHz]	$N_{Offs\text{-}UL}$	Range of N_{UL}
1	2110	0	0 – 599	1920	18000	18000 – 18599
2	1930	600	600 – 1199	1850	18600	18600 – 19199
3	1805	1200	1200 – 1949	1710	19200	19200 – 19949
4	2110	1950	1950 – 2399	1710	19950	19950 – 20399
5	869	2400	2400 – 2649	824	20400	20400 – 20649
6	875	2650	2650 – 2749	830	20650	20650 – 20749
7	2620	2750	2750 – 3449	2500	20750	20750 – 21449
8	925	3450	3450 – 3799	880	21450	21450 – 21799
9	1844.9	3800	3800 – 4149	1749.9	21800	21800 – 22149
10	2110	4150	4150 – 4749	1710	22150	22150 – 22749
11	1475.9	4750	4750 – 4949	1427.9	22750	22750 – 22949
12	729	5010	5010 – 5179	699	23010	23010 – 23179
13	746	5180	5180 – 5279	777	23180	23180 – 23279
14	758	5280	5280 – 5379	788	23280	23280 – 23379
…						
17	734	5730	5730 – 5849	704	23730	23730 – 23849
18	860	5850	5850 – 5999	815	23850	23850 – 23999
19	875	6000	6000 – 6149	830	24000	24000 – 24149
20	791	6150	6150 - 6449	832	24150	24150 - 24449
21	1495.9	6450	6450 – 6599	1447.9	24450	24450 – 24599
22	3510	6600	6600-7399	3410	24600	24600-25399
23	2180	7500	7500 – 7699	2000	25500	25500 – 25699
24	1525	7700	7700 – 8039	1626.5	25700	25700 – 26039
25	1930	8040	8040 - 8689	1850	26040	26040 - 26689
26	859	8690	8690 – 9039	814	26690	26690 - 27039
27	852	9040	9040 – 9209	807	27040	27040 – 27209
28	758	9210	9210 – 9659	703	27210	27210 – 27659
29[2]	717	9660	9660 – 9769	N/A		
…						
33	1900	36000	36000 – 36199	1900	36000	36000 – 36199
34	2010	36200	36200 – 36349	2010	36200	36200 – 36349
35	1850	36350	36350 – 36949	1850	36350	36350 – 36949
36	1930	36950	36950 – 37549	1930	36950	36950 – 37549
37	1910	37550	37550 – 37749	1910	37550	37550 – 37749
38	2570	37750	37750 – 38249	2570	37750	37750 – 38249
39	1880	38250	38250 – 38649	1880	38250	38250 – 38649
40	2300	38650	38650 – 39649	2300	38650	38650 – 39649
41	2496	39650	39650 – 41589	2496	39650	39650 – 41589
42	3400	41590	41590 – 43589	3400	41590	41590 – 43589
43	3600	43590	43590 – 45589	3600	43590	43590 – 45589
44	703	45590	45590 – 46589	703	45590	45590 – 46589

NOTE 1: The channel numbers that designate carrier frequencies so close to the operating band edges that the carrier extends beyond the operating band edge shall not be used. This implies that the first 7, 15, 25, 50, 75 and 100 channel numbers at the lower operating band edge and the last 6, 14, 24, 49, 74 and 99 channel numbers at the upper operating band edge shall not be used for channel bandwidths of 1.4, 3, 5, 10, 15 and 20 MHz respectively.

NOTE 2: Restricted to E-UTRA operation when carrier aggregation is configured.

5.8 Requirements for contiguous and non-contiguous spectrum

A spectrum allocation where the BS operates can either be contiguous or non-contiguous. Unless otherwise stated, the requirements in the present specification apply for BS configured for both contiguous spectrum operation and non-contiguous spectrum operation.

For BS operation in non-contiguous spectrum, some requirements apply also inside the sub-block gaps. For each such requirement, it is stated how the limits apply relative to the sub-block edges.

ONEPLUS - EX. 1027

6 Transmitter characteristics

6.1 General

Unless otherwise stated, the requirements in clause 6 are expressed for a single transmitter antenna connector. In case of multi-carrier transmission with one or multiple transmitter antenna connectors, transmit diversity or MIMO transmission, the requirements apply for each transmitter antenna connector.

Unless otherwise stated, the transmitter characteristics are specified at the BS antenna connector (test port A) with a full complement of transceivers for the configuration in normal operating conditions. If any external apparatus such as a TX amplifier, a filter or the combination of such devices is used, requirements apply at the far end antenna connector (port B).

Unless otherwise stated the requirements in clause 6 applies at all times, i.e. during the Transmitter ON period, the Transmitter OFF period and the Transmitter transient period.

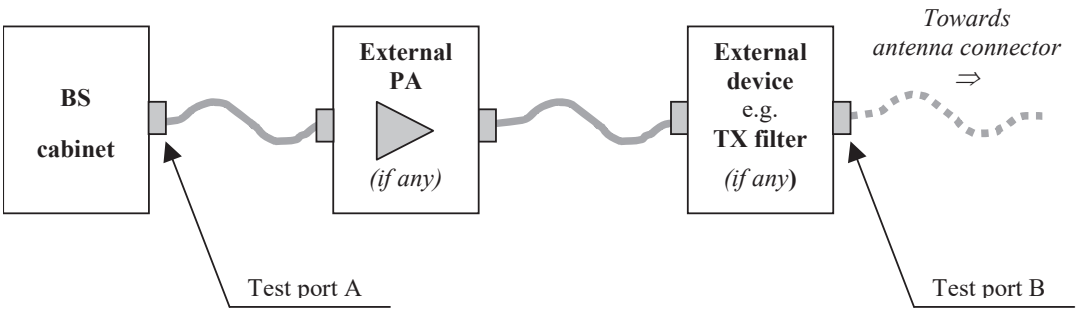

Figure 6.1-1: Transmitter test ports

6.2 Base station output power

Output power, Pout, of the base station is the mean power of one carrier delivered to a load with resistance equal to the nominal load impedance of the transmitter.

The maximum total output power (Pmax), of the base station is the mean power level measured at the antenna connector during the transmitter ON period in a specified reference condition.

Rated total output power of the base station is the mean power for BS operating in single carrier, multi-carrier, or carrier aggregation configurations that the manufacturer has declared to be available at the antenna connector during the transmitter ON period.

Maximum output power (Pmax,c) of the base station is the mean power level per carrier measured at the antenna connector during the transmitter ON period in a specified reference condition.

Rated output power, PRAT, of the base station is the mean power level per carrier for BS operating in single carrier, multi-carrier, or carrier aggregation configurations that the manufacturer has declared to be available at the antenna connector during the transmitter ON period.

NOTE: Different PRATs may be declared for different configurations

The rated output power, PRAT, of the BS shall be as specified in Table 6.2-1.

ONEPLUS - EX. 1027

Table 6.2-1: Base Station rated output power

BS class	PRAT
Wide Area BS	- (note)
Medium Range BS	< + 38 dBm
Local Area BS	≤ + 24 dBm
Home BS	≤ + 20 dBm (for one transmit antenna port) ≤ + 17 dBm (for two transmit antenna ports) ≤ + 14dBm (for four transmit antenna ports) < + 11dBm (for eight transmit antenna ports)
NOTE: There is no upper limit for the rated output power of the Wide Area Base Station.	

6.2.1 Minimum requirement

In normal conditions, the base station maximum output power shall remain within +2 dB and -2 dB of the rated output power declared by the manufacturer.

In extreme conditions, the base station maximum output power shall remain within +2.5 dB and -2.5 dB of the rated output power declared by the manufacturer.

In certain regions, the minimum requirement for normal conditions may apply also for some conditions outside the range of conditions defined as normal.

6.2.2 Additional requirement (regional)

For Band 34 operation in Japan, the rated output power declared by the manufacturer shall be less than or equal to the values specified in Table 6.2.2-1.

Table 6.2.2-1: Regional requirements for Band 34 for rated output power declared by the manufacturer.

Channel bandwidth $BW_{Channel}$ [MHz]	1.4	3	5	10	15	20
Maximum output power [W]	N/A	N/A	20	40	60	N/A

For Band 41 operation in Japan, the rated output power per BS declared by the manufacturer shall be less than or equal to the values specified in Table 6.2.2-2.

Table 6.2.2-2: Regional requirements for Band 41 for rated output power declared by the manufacturer.

Channel bandwidth $BW_{Channel}$ [MHz]	1.4	3	5	10	15	20
Maximum output power [W]	N/A	N/A	N/A	20	N/A	40

6.2.3 Home BS output power for adjacent UTRA channel protection

The Home BS shall be capable of adjusting the transmitter output power to minimize the interference level on the adjacent channels licensed to other operators in the same geographical area while optimize the Home BS coverage.

ONEPLUS - EX. 1027

These requirements are only applicable to Home BS. The requirements in this clause are applicable for AWGN radio propagation conditions.

The output power, Pout, of the Home BS shall be as specified in Table 6.2.3-1 under the following input conditions:

- CPICH Êc, measured in dBm, is the code power of the Primary CPICH on one of the adjacent channels present at the Home BS antenna connector for the CPICH received on the adjacent channels. If Tx diversity is applied on the Primary CPICH, CPICH Êc shall be the sum in [W] of the code powers of the Primary CPICH transmitted from each antenna.

- Ioh, measured in dBm, is the total received power density, including signals and interference but excluding the own Home BS signal, present at the Home BS antenna connector on the Home BS operating channel.

In case that both adjacent channels are licensed to other operators, the most stringent requirement shall apply for Pout. In the case when one of the adjacent channels is licensed to an E-UTRA operator while the other adjacent channel is licensed to an UTRA operator, the more stringent requirement of this subclause and subclause 6.2.4 shall apply for Pout. In case the Home BS's operating channel and both adjacent channels are licensed to the same operator, the requirements of this clause do not apply.

The input conditions defined for the requirements in this section are specified at the antenna connector of the Home BS. For Home BS receivers with diversity, the requirements apply to each antenna connector separately, with the other one(s) terminated or disabled. The requirements are otherwise unchanged. For Home BS(s) without measurement capability, a reference antenna with a gain of 0 dBi is assumed for converting these power levels into field strength requirements.

Table 6.2.3-1: Home BS output power for adjacent operator UTRA channel protection

Input Conditions	Output power, Pout
Ioh > CPICH Êc + 43 dB And CPICH Êc ≥ - 105dBm	≤ 10 dBm
Ioh ≤ CPICH Êc + 43 dB and CPICH Êc ≥ - 105dBm	≤ max(8 dBm, min(20 dBm, CPICH Êc + 100 dB))

Note 1: The Home BS transmitter output power specified in Table 6.2.3-1 assumes a Home BS reference antenna gain of 0 dBi, an target outage zone of 47dB around the Home BS for an UE on the adjacent channel, with an allowance of 2 dB for measurement errors, an ACIR of 33 dB, an adjacent channel UE CPICH Ec/Io target of -18 dB and the same CPICH Êc value at the adjacent channel UE as for the Home BS.

Note 2: For CPICH Êc < -105dBm, the requirements in subclauses 6.2.1 and 6.2.2 apply.

Note 3: The output power Pout is the sum transmit power across all the antennas of the Home BS, with each transmit power measured at the respective antenna connectors.

6.2.4 Home BS output power for adjacent E-UTRA channel protection

The Home BS shall be capable of adjusting the transmitter output power to minimize the interference level on the adjacent channels licensed to other operators in the same geographical area while optimize the Home BS coverage. These requirements are only applicable to Home BS. The requirements in this clause are applicable for AWGN radio propagation conditions.

The output power, Pout, of the Home BS shall be as specified in Table 6.2. 4-1 under the following input conditions:

- CRS Ês, measured in dBm, is the Reference Signal Received Power per resource element on one of the adjacent channels present at the Home BS antenna connector for the Reference Signal received on the adjacent channels. For CRS Ês determination, the cell-specific reference signal R0 according TS 36.211 [3] shall be used. If the Home BS can reliably detect that multiple TX antennas are used for transmission on the adjacent channel, it may use the average in [W] of the CRS Ês on all detected antennas.

ONEPLUS - EX. 1027

- Ioh, measured in dBm, is the total received power density, including signals and interference but excluding the own Home BS signal, present at the Home BS antenna connector on the Home BS operating channel.

In case that both adjacent channels are licensed to other operators, the most stringent requirement shall apply for Pout. In the case when one of the adjacent channels is licensed to an E-UTRA operator while the other adjacent channel is licensed to an UTRA operator, the more stringent requirement of this subclause and subclause 6.2.3 shall apply for Pout. In case the Home BS's operating channel and both adjacent channels are licensed to the same operator, the requirements of this clause do not apply.

The input conditions defined for the requirements in this section are specified at the antenna connector of the Home BS. For Home BS receivers with diversity, the requirements apply to each antenna connector separately, with the other one(s) terminated or disabled. The requirements are otherwise unchanged. For Home BS(s) without measurement capability, a reference antenna with a gain of 0 dBi is assumed for converting these power levels into field strength requirements.

Table 6.2. 4-1: Home BS output power for adjacent operator E-UTRA channel protection

Input Conditions	Output power, Pout
Ioh > CRS Ês + $10 \cdot \log_{10}\left(N_{RB}^{DL} \cdot N_{sc}^{RB}\right)$ + 30 dB and CRS Ês ≥ -127dBm	≤ 10 dBm
Ioh ≤ CRS Ês + $10 \cdot \log_{10}\left(N_{RB}^{DL} \cdot N_{sc}^{RB}\right)$ + 30 dB and CRS Ês ≥ -127dBm	≤ max(8 dBm, min(20 dBm, CRS Ês + $10 \cdot \log_{10}\left(N_{RB}^{DL} \cdot N_{sc}^{RB}\right)$ + 85 dB))

Note 1: The Home BS transmitter output power specified in Table 6.2. 4-1 assumes a Home BS reference antenna gain of 0 dBi, an target outage zone of 47dB around the Home BS for an UE on the adjacent channel, with an allowance of 2 dB for measurement errors, an ACIR of 30 dB, an adjacent channel UE Ês/Iot target of -6 dB and the same CRS Ês value at the adjacent channel UE as for the Home BS.

Note 2: For CRS Ês < -127dBm, the requirements in subclauses 6.2.1 and 6.2.2 apply.

Note 3: The output power Pout is the sum transmit power across all the antennas of the Home BS, with each transmit power measured at the respective antenna connectors.

Note 4: N_{RB}^{DL} is the number of downlink resource blocks in the own Home BS channel.

Note 5: N_{sc}^{RB} is the number of subcarriers in a resource block, $N_{sc}^{RB} = 12$.

6.2.5 Home BS Output Power for co-channel E-UTRA protection

To minimize the co-channel DL interference to non-CSG macro UEs operating in close proximity while optimizing the CSG Home BS coverage, Home BS may adjust its output power according to the requirements set out in this clause. These requirements are only applicable to Home BS. The requirements in this clause are applicable for AWGN radio propagation conditions.

For Home BS that supports the requirements in this clause, the output power, Pout, of the Home BS shall be as specified in Table 6.2.5-1 under the following input conditions:

- CRS Ês, measured in dBm, is the Reference Signal Received Power per resource element present at the Home BS antenna connector received from the co-channel Wide Area BS. For CRS Ês determination, the cell-specific reference signal R0 according TS 36.211 [10] shall be used. If the Home BS can reliably detect that multiple TX antenna ports are used for transmission by the co-channel Wide Area Base Station, it may use the average in [W] of the CRS Ês on all detected TX antenna ports, including R0.

- Ioh, measured in dBm, is the total received DL power, including all interference but excluding the own Home BS signal, present at the Home BS antenna connector on the Home BS operating channel.

ONEPLUS - EX. 1027

- Iob, measured in dBm, is the uplink received interference power, including thermal noise, within one physical resource block's bandwidth of N_{sc}^{RB} resource elements as defined in TS 36.214, present at the Home BS antenna connector on the Home BS operating channel.

The input conditions defined for the requirements in this section are specified at the antenna connector of the Home BS. For Home BS receivers with diversity, the requirements apply to each antenna connector separately, with the other one(s) terminated or disabled. The requirements are otherwise unchanged. For Home BS(s) without measurement capability, a reference antenna with a gain of 0 dBi is assumed for converting these power levels into field strength requirements.

Table 6.2.5-1: Home BS output power for co-channel E-UTRA channel protection

Input Conditions	Output power, Pout
Ioh (DL) > CRS Ês + 10log$_{10}$(N_{RB}^{DL} N_{sc}^{RB}) + 30 dB and Option 1: CRS Ês ≥ -127 dBm or Option 2: CRS Ês ≥ -127 dBm and Iob > -103 dBm	≤ 10 dBm
Ioh (DL) ≤ CRS Ês + 10log$_{10}$(N_{RB}^{DL} N_{sc}^{RB}) + 30 dB and Option 1: CRS Ês ≥ -127 dBm or Option 2. CRS Ês ≥ -127 dBm and Iob > -103 dBm	≤ max (Pmin, min (Pmax, CRS Ês + 10log$_{10}$(N_{RB}^{DL} N_{sc}^{RB}) + X)) 30 dB ≤ X ≤ 70 dB Pmin = - 10 dBm

Note 1: Only the option supported by the Home BS shall be tested.

Note 2: For CRS Ês < -127dBm, or Iob ≤ -103 dBm when Option 2 is supported, the requirements in sub-clauses 6.2.1 and 6.2.2 apply.

Note 3: The output power Pout is the sum of transmits power across all the antennas of the Home BS, with each transmit power measured at the respective antenna connectors.

Note 4: N_{RB}^{DL} is the number of downlink resource blocks in the own Home BS channel.

Note 5: N_{sc}^{RB} is the number of subcarriers in a resource block, $N_{sc}^{RB} = 12$.

Note 6: X is a network configurable parameter.

Note 7: Pmin can be lower dependent on the Home BS total dynamic range.

Note 8: Other input conditions and output power to be applied for network scenarios other than co-channel E-UTRA macro channel protection shall not be precluded.

6.3 Output power dynamics

The requirements in subclause 6.3 apply during the transmitter ON period. Transmit signal quality (as specified in subclause 6.5) shall be maintained for the output power dynamics requirements of this Clause.

Power control is used to limit the interference level.

6.3.1 RE Power control dynamic range

The RE power control dynamic range is the difference between the power of an RE and the average RE power for a BS at maximum output power for a specified reference condition.

ONEPLUS - EX. 1027

6.3.1.1 Minimum requirements

RE power control dynamic range:

Table 6.3.1.1-1 E-UTRA BS RE power control dynamic range

Modulation scheme used on the RE	RE power control dynamic range (dB)	
	(down)	(up)
QPSK (PDCCH)	-6	+4
QPSK (PDSCH)	-6	+3
16QAM (PDSCH)	-3	+3
64QAM (PDSCH)	0	0
NOTE 1: The output power per carrier shall always be less or equal to the maximum output power of the base station.		

6.3.2 Total power dynamic range

The total power dynamic range is the difference between the maximum and the minimum transmit power of an OFDM symbol for a specified reference condition.

NOTE: The upper limit of the dynamic range is the OFDM symbol power for a BS at maximum output power. The lower limit of the dynamic range is the OFDM symbol power for a BS when one resource block is transmitted. The OFDM symbol shall carry PDSCH and not contain RS, PBCH or synchronisation signals.

6.3.2.1 Minimum requirements

The downlink (DL) total power dynamic range for each E-UTRA carrier shall be larger than or equal to the level in Table 6.3.2.1-1.

Table 6.3.2.1-1 E-UTRA BS total power dynamic range

E-UTRA channel bandwidth (MHz)	Total power dynamic range (dB)
1.4	7.7
3	11.7
5	13.9
10	16.9
15	18.7
20	20

6.4 Transmit ON/OFF power

The requirements in subclause 6.4 are only applied for E-UTRA TDD BS.

6.4.1 Transmitter OFF power

Transmitter OFF power is defined as the mean power measured over 70 us filtered with a square filter of bandwidth equal to the transmission bandwidth configuration of the BS (BW_{Config}) centred on the assigned channel frequency during the transmitter OFF period.

For BS supporting intra-band contiguous CA, the transmitter OFF power is defined as the mean power measured over 70 us filtered with a square filter of bandwidth equal to the Aggregated Channel Bandwidth $BW_{Channel_CA}$ centred on $(F_{edge_high}+F_{edge_low})/2$ during the transmitter OFF period.

ONEPLUS - EX. 1027

6.4.1.1 Minimum Requirement

The transmitter OFF power spectral density shall be less than -85dBm/MHz.

6.4.2 Transmitter transient period

The transmitter transient period is the time period during which the transmitter is changing from the OFF period to the ON period or vice versa. The transmitter transient period is illustrated in Figure 6.4.2-1.

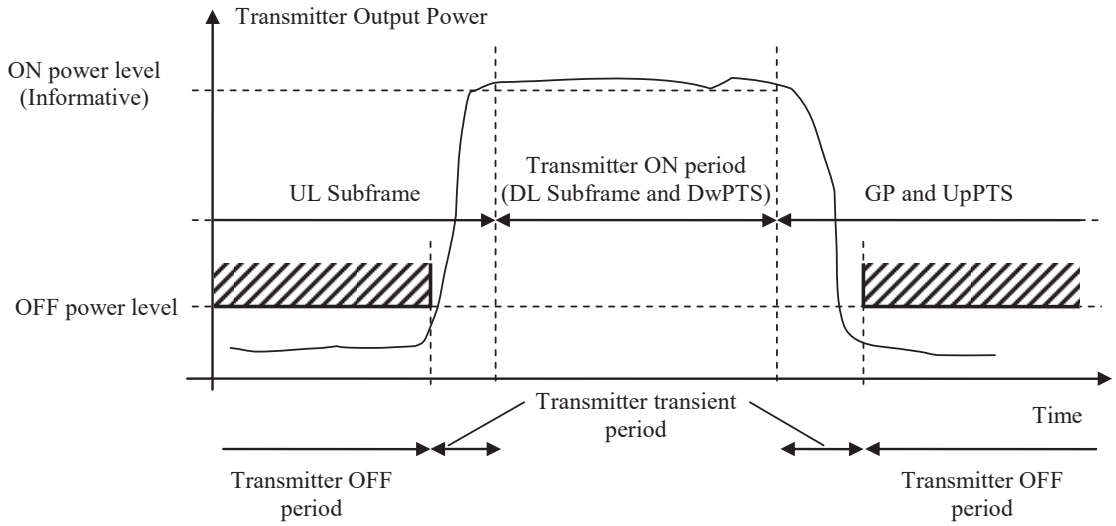

Figure 6.4.2-1 Illustration of the relations of transmitter ON period, transmitter OFF period and transmitter transient period.

6.4.2.1 Minimum requirements

The transmitter transient period shall be shorter than the values listed in Table 6.4.2.1-1.

Table 6.4.2.1-1 Minimum requirements for the transmitter transient period

Transition	Transient period length [us]
OFF to ON	17
ON to OFF	17

6.5 Transmitted signal quality

The requirements in subclause 6.5 apply to the transmitter ON period.

6.5.1 Frequency error

Frequency error is the measure of the difference between the actual BS transmit frequency and the assigned frequency. The same source shall be used for RF frequency and data clock generation.

ONEPLUS - EX. 1027

6.5.1.1 Minimum requirement

The modulated carrier frequency of each E-UTRA carrier configured by the BS shall be accurate to within the accuracy range given in Table 6.5.1-1 observed over a period of one subframe (1ms).

Table 6.5.1-1: Frequency error minimum requirement

BS class	Accuracy
Wide Area BS	±0.05 ppm
Medium Range BS	±0.1 ppm
Local Area BS	±0.1 ppm
Home BS	±0.25 ppm

6.5.2 Error Vector Magnitude

The Error Vector Magnitude is a measure of the difference between the ideal symbols and the measured symbols after the equalization. This difference is called the error vector. The equaliser parameters are estimated as defined in Annex E. The EVM result is defined as the square root of the ratio of the mean error vector power to the mean reference power expressed in percent.

For all bandwidths, the EVM measurement shall be performed for each E-UTRA carrier over all allocated resource blocks and downlink subframes within 10ms measurement periods. The boundaries of the EVM measurement periods need not be aligned with radio frame boundaries. The EVM value is then calculated as the mean square root of the measured values. The EVM of each E-UTRA carrier for different modulation schemes on PDSCH shall be better than the limits in table 6.5.2-1:

Table 6.5.2-1 EVM requirements

Modulation scheme for PDSCH	Required EVM [%]
QPSK	17.5 %
16QAM	12.5 %
64QAM	8 %

6.5.3 Time alignment error

This requirement applies to frame timing in TX diversity, MIMO transmission, carrier aggregation and their combinations.

Frames of the LTE signals present at the BS transmitter antenna port(s) are not perfectly aligned in time. In relation to each other, the RF signals present at the BS transmitter antenna port(s) experience certain timing differences.

For a specific set of signals/transmitter configuration/transmission mode, time alignment error (TAE) is defined as the largest timing difference between any two signals.

6.5.3.1 Minimum Requirement

For MIMO or TX diversity transmissions, at each carrier frequency, TAE shall not exceed 65 ns.

For intra-band contiguous carrier aggregation, with or without MIMO or TX diversity, TAE shall not exceed 130 ns.

For intra-band non-contiguous carrier aggregation, with or without MIMO or TX diversity, TAE shall not exceed 260 ns.

For inter-band carrier aggregation, with or without MIMO or TX diversity, TAE shall not exceed 1.3 μs.

ONEPLUS - EX. 1027

6.5.4 DL RS power

DL RS power is the resource element power of the Downlink Reference Symbol.

The absolute DL RS power is indicated on the DL-SCH. The absolute accuracy is defined as the maximum deviation between the DL RS power indicated on the DL-SCH and the DL RS power of each E-UTRA carrier at the BS antenna connector.

6.5.4.1 Minimum requirements

DL RS power of each E-UTRA carrier shall be within ± 2.1 dB of the DL RS power indicated on the DL-SCH

6.6 Unwanted emissions

Unwanted emissions consist of out-of-band emissions and spurious emissions [2]. Out of band emissions are unwanted emissions immediately outside the channel bandwidth resulting from the modulation process and non-linearity in the transmitter but excluding spurious emissions. Spurious emissions are emissions which are caused by unwanted transmitter effects such as harmonics emission, parasitic emission, intermodulation products and frequency conversion products, but exclude out of band emissions.

The out-of-band emissions requirement for the BS transmitter is specified both in terms of Adjacent Channel Leakage power Ratio (ACLR) and Operating band unwanted emissions. The Operating band unwanted emissions define all unwanted emissions in the downlink operating band plus the frequency ranges 10 MHz above and 10 MHz below the band. Unwanted emissions outside of this frequency range are limited by a spurious emissions requirement.

For a BS supporting multi-carrier or intra-band contiguous CA, the unwanted emissions requirements apply to channel bandwidths of the outermost carrier larger than or equal to 5 MHz.

There is in addition a requirement for occupied bandwidth.

6.6.1 Occupied bandwidth

The occupied bandwidth is the width of a frequency band such that, below the lower and above the upper frequency limits, the mean powers emitted are each equal to a specified percentage β/2 of the total mean transmitted power. See also ITU-R Recommendation SM.328 [5].

The value of β/2 shall be taken as 0.5%.

The requirement applies during the transmitter ON period.

6.6.1.1 Minimum requirement

The occupied bandwidth for each E-UTRA carrier shall be less than the channel bandwidth as defined in Table 5.6-1. For intra-band contiguous CA, the occupied bandwidth shall be less than or equal to the Aggregated Channel Bandwidth as defined in subclause 5.6. For a BS operating in non-contiguous spectrum the requirement applies to aggregated carriers in the same sub-block.

6.6.2 Adjacent Channel Leakage power Ratio (ACLR)

Adjacent Channel Leakage power Ratio (ACLR) is the ratio of the filtered mean power centred on the assigned channel frequency to the filtered mean power centred on an adjacent channel frequency.

The requirements shall apply outside the Base Station RF bandwidth edges whatever the type of transmitter considered (single carrier or multi-carrier). It applies for all transmission modes foreseen by the manufacturer's specification.

In addition for a BS operating in non-contiguous spectrum, the ACLR applies for the first adjacent channel inside any sub-block gap with a sub-block gap size $W_{gap} \geq 15$MHz. The ACLR requirement for the second adjacent channel applies inside any sub-block gap with a sub-block gap size $W_{gap} \geq 20$ MHz. The CACLR requirement in subclause 6.6.2.2 applies in sub block gaps for the frequency ranges defined in Table 6.6.2.2-1.

The requirement applies during the transmitter ON period.

ONEPLUS - EX. 1027

6.6.2.1 Minimum requirement

The ACLR is defined with a square filter of bandwidth equal to the transmission bandwidth configuration of the transmitted signal (BW_{Config}) centred on the assigned channel frequency and a filter centred on the adjacent channel frequency according to the tables below.

For Category A Wide Area BS, either the ACLR limits in the tables below or the absolute limit of -13dBm/MHz apply, whichever is less stringent.

For Category B Wide Area BS, either the ACLR limits in the tables below or the absolute limit of -15dBm/MHz apply, whichever is less stringent.

For Medium Range BS, either the ACLR limits in the tables below or the absolute limit of -25 dBm/MHz shall apply, whichever is less stringent.

For Local Area BS, either the ACLR limits in the tables below or the absolute limit of -32dBm/MHz shall apply, whichever is less stringent.

For Home BS, either the ACLR limits in the tables below or the absolute limit of -50dBm/MHz apply, whichever is less stringent.

For operation in paired spectrum, the ACLR shall be higher than the value specified in Table 6.6.2.1-1.

Table 6.6.2.1-1: Base Station ACLR in paired spectrum

Channel bandwidth of E-UTRA lowest (highest) carrier transmitted $BW_{Channel}$ [MHz]	BS adjacent channel centre frequency offset below the lowest or above the highest carrier centre frequency transmitted	Assumed adjacent channel carrier (informative)	Filter on the adjacent channel frequency and corresponding filter bandwidth	ACLR limit
1.4, 3.0, 5, 10, 15, 20	$BW_{Channel}$	E-UTRA of same BW	Square (BW_{Config})	45 dB
	2 x $BW_{Channel}$	E-UTRA of same BW	Square (BW_{Config})	45 dB
	$BW_{Channel}$ /2 + 2.5 MHz	3.84 Mcps UTRA	RRC (3.84 Mcps)	45 dB
	$BW_{Channel}$ /2 + 7.5 MHz	3.84 Mcps UTRA	RRC (3.84 Mcps)	45 dB
NOTE 1: $BW_{Channel}$ and BW_{Config} are the channel bandwidth and transmission bandwidth configuration of the E-UTRA lowest (highest) carrier transmitted on the assigned channel frequency. NOTE 2: The RRC filter shall be equivalent to the transmit pulse shape filter defined in TS 25.104 [6], with a chip rate as defined in this table.				

ONEPLUS - EX. 1027

For operation in unpaired spectrum, the ACLR shall be higher than the value specified in Table 6.6.2.1-2.

Table 6.6.2.1-2: Base Station ACLR in unpaired spectrum with synchronized operation

Channel bandwidth of E-UTRA lowest (highest) carrier transmitted $BW_{Channel}$ [MHz]	BS adjacent channel centre frequency offset below the lowest or above the highest carrier centre frequency transmitted	Assumed adjacent channel carrier (informative)	Filter on the adjacent channel frequency and corresponding filter bandwidth	ACLR limit
1.4, 3	$BW_{Channel}$	E-UTRA of same BW	Square (BW_{Config})	45 dB
	2 x $BW_{Channel}$	E-UTRA of same BW	Square (BW_{Config})	45 dB
	$BW_{Channel}$ /2 + 0.8 MHz	1.28 Mcps UTRA	RRC (1.28 Mcps)	45 dB
	$BW_{Channel}$ /2 + 2.4 MHz	1.28 Mcps UTRA	RRC (1.28 Mcps)	45 dB
5, 10, 15, 20	$BW_{Channel}$	E-UTRA of same BW	Square (BW_{Config})	45 dB
	2 x $BW_{Channel}$	E-UTRA of same BW	Square (BW_{Config})	45 dB
	$BW_{Channel}$ /2 + 0.8 MHz	1.28 Mcps UTRA	RRC (1.28 Mcps)	45 dB
	$BW_{Channel}$ /2 + 2.4 MHz	1.28 Mcps UTRA	RRC (1.28 Mcps)	45 dB
	$BW_{Channel}$ /2 + 2.5 MHz	3.84 Mcps UTRA	RRC (3.84 Mcps)	45 dB
	$BW_{Channel}$ /2 + 7.5 MHz	3.84 Mcps UTRA	RRC (3.84 Mcps)	45 dB
	$BW_{Channel}$ /2 + 5 MHz	7.68 Mcps UTRA	RRC (7.68 Mcps)	45 dB
	$BW_{Channel}$ /2 + 15 MHz	7.68 Mcps UTRA	RRC (7.68 Mcps)	45 dB
NOTE 1: $BW_{Channel}$ and BW_{Config} are the channel bandwidth and transmission bandwidth configuration of the E-UTRA lowest (highest) carrier transmitted on the assigned channel frequency. NOTE 2: The RRC filter shall be equivalent to the transmit pulse shape filter defined in TS 25.105 [7], with a chip rate as defined in this table.				

For operation in non-contiguous paired spectrum, the ACLR shall be higher than the value specified in Table 6.6.2.1-3.

Table 6.6.2.1-3: Base Station ACLR in non-contiguous paired spectrum

Sub-block gap size (W_{gap}) where the limit applies	BS adjacent channel centre frequency offset below or above the sub-block edge (inside the gap)	Assumed adjacent channel carrier (informative)	Filter on the adjacent channel frequency and corresponding filter bandwidth	ACLR limit
W_{gap} ≥ 15 MHz	2.5 MHz	3.84 Mcps UTRA	RRC (3.84 Mcps)	45 dB
W_{gap} ≥ 20 MHz	7.5 MHz	3.84 Mcps UTRA	RRC (3.84 Mcps)	45 dB
NOTE: The RRC filter shall be equivalent to the transmit pulse shape filter defined in TS 25.104 [6], with a chip rate as defined in this table.				

For operation in non-contiguous unpaired spectrum, the ACLR shall be higher than the value specified in Table 6.6.2.1-4.

Table 6.6.2.1-4: Base Station ACLR in non-contiguous unpaired spectrum

Sub-block gap size (W_{gap}) where the limit applies	BS adjacent channel centre frequency offset below or above the sub-block edge (inside the gap)	Assumed adjacent channel carrier (informative)	Filter on the adjacent channel frequency and corresponding filter bandwidth	ACLR limit
W_{gap} ≥ 15 MHz	2.5 MHz	5MHz E-UTRA carrier	Square (BW_{Config})	45 dB
W_{gap} ≥ 20 MHz	7.5 MHz	5MHz E-UTRA carrier	Square (BW_{Config})	45 dB

6.6.2.2 Cumulative ACLR requirement in non-contiguous spectrum

The following requirement applies for a BS operating in non-contiguous spectrum.

ONEPLUS - EX. 1027

The Cumulative Adjacent Channel Leakage power Ratio (CACLR) in a sub-block gap is the ratio of:

a) the sum of the filtered mean power centred on the assigned channel frequencies for the two carriers adjacent to each side of the sub-block gap, and

b) the filtered mean power centred on a frequency channel adjacent to one of the respective sub-block edges.

The assumed filter for the adjacent channel frequency is defined in Table 6.6.2.2-1/2 and the filters on the assigned channels are defined in Table 6.6.2.2-3.

For Category A BS, either the CACLR limits in Table 6.6.2.2-1/2 or the absolute limit of -13dBm/MHz apply, whichever is less stringent.

For Category B BS, either the CACLR limits in Table 6.6.2.2-1/2 or the absolute limit of -15dBm/MHz apply, whichever is less stringent.

For operation in non-contiguous spectrum, the CACLR for E-UTRA carriers located on either side of the sub-block gap shall be higher than the value specified in Table 6.6.2.2-1/2.

Table 6.6.2.2-1: Base Station CACLR in non-contiguous paired spectrum

Sub-block gap size (W_{gap}) where the limit applies	BS adjacent channel centre frequency offset below or above the sub-block edge (inside the gap)	Assumed adjacent channel carrier (informative)	Filter on the adjacent channel frequency and corresponding filter bandwidth	CACLR limit
5 MHz ≤ W_{gap} < 15 MHz	2.5 MHz	3.84 Mcps UTRA	RRC (3.84 Mcps)	45 dB
10 MHz < W_{gap} < 20 MHz	7.5 MHz	3.84 Mcps UTRA	RRC (3.84 Mcps)	45 dB
NOTE: The RRC filter shall be equivalent to the transmit pulse shape filter defined in TS 25.104 [6], with a chip rate as defined in this table.				

Table 6.6.2.2-2: Base Station CACLR in non-contiguous unpaired spectrum

Sub-block gap size (W_{gap}) where the limit applies	BS adjacent channel centre frequency offset below or above the sub-block edge (inside the gap)	Assumed adjacent channel carrier (informative)	Filter on the adjacent channel frequency and corresponding filter bandwidth	CACLR limit
5 MHz ≤ W_{gap} < 15 MHz	2.5 MHz	5MHz E-UTRA carrier	Square (BW_{Config})	45 dB
10 MHz < W_{gap} < 20 MHz	7.5 MHz	5MHz E-UTRA carrier	Square (BW_{Config})	45 dB

Table 6.6.2.2-3: Filter parameters for the assigned channel

RAT of the carrier adjacent to the sub-block gap	Filter on the assigned channel frequency and corresponding filter bandwidth
E-UTRA	E-UTRA of same BW

6.6.3 Operating band unwanted emissions

Unless otherwise stated, the Operating band unwanted emission limits are defined from 10 MHz below the lowest frequency of the downlink operating band up to 10 MHz above the highest frequency of the downlink operating band.

ONEPLUS - EX. 1027

The requirements shall apply whatever the type of transmitter considered (single carrier or multi-carrier) and for all transmission modes foreseen by the manufacturer's specification. In addition, for a BS operating in non-contiguous spectrum, the requirements apply inside any sub-block gap.

The unwanted emission limits in the part of the downlink operating band that falls in the spurious domain are consistent with ITU-R Recommendation SM.329 [2].

Emissions shall not exceed the maximum levels specified in the tables below, where:

- Δf is the separation between the channel edge frequency and the nominal -3dB point of the measuring filter closest to the carrier frequency.
- f_offset is the separation between the channel edge frequency and the centre of the measuring filter.
- f_offset_{max} is the offset to the frequency 10 MHz outside the downlink operating band.
- Δf_{max} is equal to f_offset_{max} minus half of the bandwidth of the measuring filter.

For a multicarrier E-UTRA BS or BS configured for intra-band contiguous or non-contiguous carrier aggregation the definitions above apply to the lower edge of the carrier transmitted at the lowest carrier frequency and the upper edge of the carrier transmitted at the highest carrier frequency within a specified frequency band.

In addition inside any sub-block gap for a BS operating in non-contiguous spectrum, emissions shall not exceed the cumulative sum of the minimum requirements specified for the adjacent sub blocks on each side of the sub block gap. The minimum requirement for each sub block is specified in Tables 6.6.3.1-1 to 6.6.3.3-3 below, where in this case:

- Δf is the separation between the sub block edge frequency and the nominal -3 dB point of the measuring filter closest to the sub block edge.
- f_offset is the separation between the sub block edge frequency and the centre of the measuring filter.
- f_offset_{max} is equal to the sub block gap bandwidth divided by two.
- Δf_{max} is equal to f_offset_{max} minus half of the bandwidth of the measuring filter.

For Wide Area BS, the requirements of either subclause 6.6.3.1 (Category A limits) or subclause 6.6.3.2 (Category B limits) shall apply.

For Local Area BS, the requirements of subclause 6.6.3.2A shall apply (Category A and B).

For Home BS, the requirements of subclause 6.6.3.2B shall apply (Category A and B).

For Medium Range BS, the requirements in subclause 6.6.3.2C shall apply (Category A and B).

The application of either Category A or Category B limits shall be the same as for Transmitter spurious emissions (Mandatory Requirements) in subclause 6.6.4.1.

ONEPLUS - EX. 1027

6.6.3.1 Minimum requirements for Wide Area BS (Category A)

For E-UTRA BS operating in Bands 5, 6, 8, 12, 13, 14, 17, 18, 19, 26, 27, 28, 29, 44 emissions shall not exceed the maximum levels specified in Tables 6.6.3.1-1 to 6.6.3.1-3.

Table 6.6.3.1-1: Wide Area BS operating band unwanted emission limits for 1.4 MHz channel bandwidth (E-UTRA bands <1GHz) for Category A

Frequency offset of measurement filter -3dB point, Δf	Frequency offset of measurement filter centre frequency, f_offset	Minimum requirement (Note 1)	Measurement bandwidth (Note 4)
0 MHz ≤ Δf < 1.4 MHz	0.05 MHz ≤ f_offset < 1.45 MHz	$-1dBm - \frac{10}{1.4} \cdot \left(\frac{f_offset}{MHz} - 0.05 \right) dB$	100 kHz
1.4 MHz ≤ Δf < 2.8 MHz	1.45 MHz ≤ f_offset < 2.85 MHz	-11 dBm	100 kHz
2.8 MHz ≤ Δf ≤ Δf_{max}	2.85 MHz ≤ f_offset < f_offset_{max}	-13 dBm	100 kHz
NOTE 1: For a BS supporting non-contiguous spectrum operation the minimum requirement within sub-block gaps is calculated as a cumulative sum of adjacent sub blocks on each side of the sub block gap. Exception is Δf ≥ 10MHz from both adjacent sub blocks on each side of the sub-block gap, where the minimum requirement within sub-block gaps shall be -13dBm/100kHz.			

Table 6.6.3.1-2: Wide Area BS operating band unwanted emission limits for 3 MHz channel bandwidth (E-UTRA bands <1GHz) for Category A

Frequency offset of measurement filter -3dB point, Δf	Frequency offset of measurement filter centre frequency, f_offset	Minimum requirement (Note 1)	Measurement bandwidth (Note 4)
0 MHz ≤ Δf < 3 MHz	0.05 MHz ≤ f_offset < 3.05 MHz	$-5dBm - \frac{10}{3} \cdot \left(\frac{f_offset}{MHz} - 0.05 \right) dB$	100 kHz
3 MHz ≤ Δf < 6 MHz	3.05 MHz ≤ f_offset < 6.05 MHz	-15 dBm	100 kHz
6 MHz ≤ Δf ≤ Δf_{max}	6.05 MHz ≤ f_offset < f_offset_{max}	-13 dBm	100 kHz
NOTE 1: For a BS supporting non-contiguous spectrum operation the minimum requirement within sub-block gaps is calculated as a cumulative sum of adjacent sub blocks on each side of the sub block gap. Exception is Δf ≥ 10MHz from both adjacent sub blocks on each side of the sub-block gap, where the minimum requirement within sub-block gaps shall be -13dBm/100kHz.			

Table 6.6.3.1-3: Wide Area BS operating band unwanted emission limits for 5, 10, 15 and 20 MHz channel bandwidth (E-UTRA bands <1GHz) for Category A

Frequency offset of measurement filter -3dB point, Δf	Frequency offset of measurement filter centre frequency, f_offset	Minimum requirement (Note 1)	Measurement bandwidth (Note 4)
0 MHz ≤ Δf < 5 MHz	0.05 MHz ≤ f_offset < 5.05 MHz	$-7dBm - \frac{7}{5} \cdot \left(\frac{f_offset}{MHz} - 0.05 \right) dB$	100 kHz
5 MHz ≤ Δf < min(10 MHz, Δf_{max})	5.05 MHz ≤ f_offset < min(10.05 MHz, f_offset_{max})	-14 dBm	100 kHz
10 MHz ≤ Δf ≤ Δf_{max}	10.05 MHz ≤ f_offset < f_offset_{max}	-13 dBm (Note 6)	100 kHz
NOTE 1: For a BS supporting non-contiguous spectrum operation the minimum requirement within sub-block gaps is calculated as a cumulative sum of adjacent sub blocks on each side of the sub block gap. Exception is Δf ≥ 10MHz from both adjacent sub blocks on each side of the sub-block gap, where the minimum requirement within sub-block gaps shall be -13dBm/100kHz.			

ONEPLUS - EX. 1027

For E-UTRA BS operating in Bands 1, 2, 3, 4, 7, 9, 10, 11, 21, 22, 23, 24, 25, 33, 34, 35, 36, 37, 38, 39, 40, 41, 42, 43, emissions shall not exceed the maximum levels specified in Tables 6.6.3.1-4 to 6.6.3.1-6:

Table 6.6.3.1-4: Wide Area BS operating band unwanted emission limits for 1.4 MHz channel bandwidth (E-UTRA bands >1GHz) for Category A

Frequency offset of measurement filter -3dB point, Δf	Frequency offset of measurement filter centre frequency, f_offset	Minimum requirement (Note 1)	Measurement bandwidth (Note 4)
0 MHz ≤ Δf < 1.4 MHz	0.05 MHz ≤ f_offset < 1.45 MHz	$-1dBm - \frac{10}{1.4} \cdot \left(\frac{f_offset}{MHz} - 0.05 \right) dB$	100 kHz
1.4 MHz ≤ Δf < 2.8 MHz	1.45 MHz ≤ f_offset < 2.85 MHz	-11 dBm	100 kHz
2.8 MHz ≤ Δf ≤ Δf_{max}	3.3 MHz ≤ f_offset < f_$offset_{max}$	-13 dBm	1MHz
NOTE 1: For a BS supporting non-contiguous spectrum operation the minimum requirement within sub-block gaps is calculated as a cumulative sum of adjacent sub blocks on each side of the sub block gap. Exception is Δf ≥ 10MHz from both adjacent sub blocks on each side of the sub-block gap, where the minimum requirement within sub-block gaps shall be -13dBm/1MHz.			

Table 6.6.3.1-5: Wide Area BS operating band unwanted emission limits for 3 MHz channel bandwidth (E-UTRA bands >1GHz) for Category A

Frequency offset of measurement filter -3dB point, Δf	Frequency offset of measurement filter centre frequency, f_offset	Minimum requirement (Note 1)	Measurement bandwidth (Note 4)
0 MHz ≤ Δf < 3 MHz	0.05 MHz ≤ f_offset < 3.05 MHz	$-5dBm - \frac{10}{3} \cdot \left(\frac{f_offset}{MHz} - 0.05 \right) dB$	100 kHz
3 MHz ≤ Δf < 6 MHz	3.05 MHz ≤ f_offset < 6.05 MHz	-15 dBm	100 kHz
6 MHz ≤ Δf ≤ Δf_{max}	6.5 MHz ≤ f_offset < f_$offset_{max}$	-13 dBm	1MHz
NOTE 1: For a BS supporting non-contiguous spectrum operation the minimum requirement within sub-block gaps is calculated as a cumulative sum of adjacent sub blocks on each side of the sub block gap. Exception is Δf ≥ 10MHz from both adjacent sub blocks on each side of the sub-block gap, where the minimum requirement within sub-block gaps shall be -13dBm/1MHz.			

Table 6.6.3.1-6: Wide Area BS operating band unwanted emission limits for 5, 10, 15 and 20 MHz channel bandwidth (E-UTRA bands >1GHz) for Category A

Frequency offset of measurement filter -3dB point, Δf	Frequency offset of measurement filter centre frequency, f_offset	Minimum requirement (Note 1)	Measurement bandwidth (Note 4)
0 MHz ≤ Δf < 5 MHz	0.05 MHz ≤ f_offset < 5.05 MHz	$-7dBm - \frac{7}{5} \cdot \left(\frac{f_offset}{MHz} - 0.05 \right) dB$	100 kHz
5 MHz ≤ Δf < min(10 MHz, Δf_{max})	5.05 MHz ≤ f_offset < min(10.05 MHz, f_$offset_{max}$)	-14 dBm	100 kHz
10 MHz ≤ Δf ≤ Δf_{max}	10.5 MHz ≤ f_offset < f_$offset_{max}$	-13 dBm (Note 6)	1MHz
NOTE 1: For a BS supporting non-contiguous spectrum operation the minimum requirement within sub-block gaps is calculated as a cumulative sum of adjacent sub blocks on each side of the sub block gap. Exception is Δf ≥ 10MHz from both adjacent sub blocks on each side of the sub-block gap, where the minimum requirement within sub-block gaps shall be -13dBm/1MHz.			

ONEPLUS - EX. 1027

6.6.3.2 Minimum requirements for Wide Area BS (Category B)

For Category B Operating band unwanted emissions, there are two options for the limits that may be applied regionally. Either the limits in subclause 6.6.3.2.1 or subclause 6.6.3.2.2 shall be applied.

6.6.3.2.1 Category B requirements (Option 1)

For E-UTRA BS operating in Bands 5, 8, 12, 13, 14, 17, 20, 26, 27, 28, 29, 44 emissions shall not exceed the maximum levels specified in Tables 6.6.3.2.1-1 to 6.6.3.2.1-3:

Table 6.6.3.2.1-1: Wide Area BS operating band unwanted emission limits for 1.4 MHz channel bandwidth (E-UTRA bands <1GHz) for Category B

Frequency offset of measurement filter -3dB point, Δf	Frequency offset of measurement filter centre frequency, f_offset	Minimum requirement (Note 1)	Measurement bandwidth (Note 4)
0 MHz ≤ Δf < 1.4 MHz	0.05 MHz ≤ f_offset < 1.45 MHz	$-1dBm - \frac{10}{1.4} \cdot \left(\frac{f_offset}{MHz} - 0.05 \right) dB$	100 kHz
1.4 MHz ≤ Δf < 2.8 MHz	1.45 MHz ≤ f_offset < 2.85 MHz	-11 dBm	100 kHz
2.8 MHz ≤ Δf ≤ Δf_{max}	2.85 MHz ≤ f_offset < f_offset_{max}	-16 dBm	100 kHz
NOTE 1: For a BS supporting non-contiguous spectrum operation the minimum requirement within sub-block gaps is calculated as a cumulative sum of adjacent sub blocks on each side of the sub block gap. Exception is Δf ≥ 10MHz from both adjacent sub blocks on each side of the sub-block gap, where the minimum requirement within sub-block gaps shall be -16dBm/100kHz.			

Table 6.6.3.2.1-2: Wide Area BS operating band unwanted emission limits for 3 MHz channel bandwidth (E-UTRA bands <1GHz) for Category B

Frequency offset of measurement filter -3dB point, Δf	Frequency offset of measurement filter centre frequency, f_offset	Minimum requirement (Note 1)	Measurement bandwidth (Note 4)
0 MHz ≤ Δf < 3 MHz	0.05 MHz ≤ f_offset < 3.05 MHz	$-5dBm - \frac{10}{3} \cdot \left(\frac{f_offset}{MHz} - 0.05 \right) dB$	100 kHz
3 MHz ≤ Δf < 6 MHz	3.05 MHz ≤ f_offset < 6.05 MHz	-15 dBm	100 kHz
6 MHz ≤ Δf ≤ Δf_{max}	6.05 MHz ≤ f_offset < f_offset_{max}	-16 dBm	100 kHz
NOTE 1: For a BS supporting non-contiguous spectrum operation the minimum requirement within sub-block gaps is calculated as a cumulative sum of adjacent sub blocks on each side of the sub block gap. Exception is Δf ≥ 10MHz from both adjacent sub blocks on each side of the sub-block gap, where the minimum requirement within sub-block gaps shall be -16dBm/100kHz.			

Table 6.6.3.2.1-3: Wide Area BS operating band unwanted emission limits for 5, 10, 15 and 20 MHz channel bandwidth (E-UTRA bands <1GHz) for Category B

Frequency offset of measurement filter -3dB point, Δf	Frequency offset of measurement filter centre frequency, f_offset	Minimum requirement (Note 1)	Measurement bandwidth (Note 4)
0 MHz ≤ Δf < 5 MHz	0.05 MHz ≤ f_offset < 5.05 MHz	$-7dBm - \frac{7}{5} \cdot \left(\frac{f_offset}{MHz} - 0.05 \right) dB$	100 kHz
5 MHz ≤ Δf < min(10 MHz, Δf_{max})	5.05 MHz ≤ f_offset < min(10.05 MHz, f_offset_{max})	-14 dBm	100 kHz
10 MHz ≤ Δf ≤ Δf_{max}	10.05 MHz ≤ f_offset < f_offset_{max}	-16 dBm (Note 6)	100 kHz
NOTE 1: For a BS supporting non-contiguous spectrum operation the minimum requirement within sub-block gaps is calculated as a cumulative sum of adjacent sub blocks on each side of the sub block gap. Exception is Δf ≥ 10MHz from both adjacent sub blocks on each side of the sub-block gap, where the minimum requirement within sub-block gaps shall be -16dBm/100kHz.			

ONEPLUS - EX. 1027

For E-UTRA BS operating in Bands 1, 2, 3, 4, 7, 10, 22, 25, 33, 34, 35, 36, 37, 38, 39, 40, 41, 42, 43, emissions shall not exceed the maximum levels specified in Tables 6.6.3.2.1-4 to 6.6.3.2.1-6:

Table 6.6.3.2.1-4: Wide Area BS operating band unwanted emission limits for 1.4 MHz channel bandwidth (E-UTRA bands >1GHz) for Category B

Frequency offset of measurement filter -3dB point, Δf	Frequency offset of measurement filter centre frequency, f_offset	Minimum requirement (Note 1)	Measurement bandwidth (Note 4)
0 MHz ≤ Δf < 1.4 MHz	0.05 MHz ≤ f_offset < 1.45 MHz	$-1dBm - \frac{10}{1.4} \cdot \left(\frac{f_offset}{MHz} - 0.05 \right) dB$	100 kHz
1.4 MHz ≤ Δf < 2.8 MHz	1.45 MHz ≤ f_offset < 2.85 MHz	-11 dBm	100 kHz
2.8 MHz ≤ Δf ≤ Δf_{max}	3.3 MHz ≤ f_offset < f_$offset_{max}$	-15 dBm	1MHz
NOTE 1: For a BS supporting non-contiguous spectrum operation the minimum requirement within sub-block gaps is calculated as a cumulative sum of adjacent sub blocks on each side of the sub block gap. Exception is Δf ≥ 10MHz from both adjacent sub blocks on each side of the sub-block gap, where the minimum requirement within sub-block gaps shall be -15dBm/1MHz.			

Table 6.6.3.2.1-5: Wide Area BS operating band unwanted emission limits for 3 MHz channel bandwidth (E-UTRA bands >1GHz) for Category B

Frequency offset of measurement filter -3dB point, Δf	Frequency offset of measurement filter centre frequency, f_offset	Minimum requirement (Note 1)	Measurement bandwidth (Note 4)
0 MHz ≤ Δf < 3 MHz	0.05 MHz ≤ f_offset < 3.05 MHz	$-5dBm - \frac{10}{3} \cdot \left(\frac{f_offset}{MHz} - 0.05 \right) dB$	100 kHz
3 MHz ≤ Δf < 6 MHz	3.05 MHz ≤ f_offset < 6.05 MHz	-15 dBm	100 kHz
6 MHz ≤ Δf ≤ Δf_{max}	6.5 MHz ≤ f_offset < f_$offset_{max}$	-15 dBm	1MHz
NOTE 1: For a BS supporting non-contiguous spectrum operation the minimum requirement within sub-block gaps is calculated as a cumulative sum of adjacent sub blocks on each side of the sub block gap. Exception is Δf ≥ 10MHz from both adjacent sub blocks on each side of the sub-block gap, where the minimum requirement within sub-block gaps shall be -15dBm/1MHz.			

Table 6.6.3.2.1-6: Wide Area BS operating band unwanted emission limits for 5, 10, 15 and 20 MHz channel bandwidth (E-UTRA bands >1GHz) for Category B

Frequency offset of measurement filter -3dB point, Δf	Frequency offset of measurement filter centre frequency, f_offset	Minimum requirement (Note 1)	Measurement bandwidth (Note 4)
0 MHz ≤ Δf < 5 MHz	0.05 MHz ≤ f_offset < 5.05 MHz	$-7dBm - \frac{7}{5} \cdot \left(\frac{f_offset}{MHz} - 0.05 \right) dB$	100 kHz
5 MHz ≤ Δf < min(10 MHz, Δf_{max})	5.05 MHz ≤ f_offset < min(10.05 MHz, f_$offset_{max}$)	-14 dBm	100 kHz
10 MHz ≤ Δf ≤ Δf_{max}	10.5 MHz ≤ f_offset < f_$offset_{max}$	-15 dBm (Note 6)	1MHz
NOTE 1: For a BS supporting non-contiguous spectrum operation the minimum requirement within sub-block gaps is calculated as a cumulative sum of adjacent sub blocks on each side of the sub block gap. Exception is Δf ≥ 10MHz from both adjacent sub blocks on each side of the sub-block gap, where the minimum requirement within sub-block gaps shall be -15dBm/1MHz.			

ONEPLUS - EX. 1027

6.6.3.2.2 Category B (Option 2)

The limits in this subclause are intended for Europe and may be applied regionally for BS operating in band 1, 3, 8, 33 or 34.

For a BS operating in band 1, 3, 8, 33 or 34, emissions shall not exceed the maximum levels specified in Table 6.6.3.2.2-1 below for 5, 10, 15 and 20 MHz channel bandwidth:

Table 6.6.3.2.2-1: Regional Wide Area BS operating band unwanted emission limits in band 1, 3, 8, 33 or 34 for 5, 10, 15 and 20 MHz channel bandwidth for Category B

Frequency offset of measurement filter -3dB point, Δf	Frequency offset of measurement filter centre frequency, f_offset	Minimum requirement (Note 1)	Measurement bandwidth (Note 4)
0 MHz ≤ Δf < 0.2 MHz	0.015MHz ≤ f_offset < 0.215MHz	-14 dBm	30 kHz
0.2 MHz ≤ Δf < 1 MHz	0.215MHz ≤ f_offset < 1.015MHz	$-14dBm - 15 \cdot \left(\frac{f_offset}{MHz} - 0.215 \right) dB$	30 kHz
(Note 5)	1.015MHz ≤ f_offset < 1.5 MHz	-26 dBm	30 kHz
1 MHz ≤ Δf ≤ min(10 MHz, Δf_{max})	1.5 MHz ≤ f_offset < min(10.5 MHz, f_offset_{max})	-13 dBm	1 MHz
10 MHz ≤ Δf ≤ Δf_{max}	10.5 MHz ≤ f_offset < f_offset_{max}	-15 dBm (Note 6)	1 MHz
NOTE 1: For a BS supporting non-contiguous spectrum operation the minimum requirement within sub-block gaps is calculated as a cumulative sum of adjacent sub blocks on each side of the sub block gap. Exception is Δf ≥ 10MHz from both adjacent sub blocks on each side of the sub-block gap, where the minimum requirement within sub-block gaps shall be -15dBm/1MHz.			

For a BS operating in band 1, 3, 8, 33 or 34, emissions shall not exceed the maximum levels specified in Table 6.6.3.2.2-2 below for 3 MHz channel bandwidth:

Table 6.6.3.2.2-2: Regional Wide Area BS operating band unwanted emission limits in band 1, 3, 8, 33 or 34 for 3 MHz channel bandwidth for Category B

Frequency offset of measurement filter -3dB point, Δf	Frequency offset of measurement filter centre frequency, f_offset	Minimum requirement (Note 1)	Measurement bandwidth (Note 4)
0 MHz ≤ Δf < 0.05 MHz	0.015 MHz ≤ f_offset < 0.065 MHz	$5dBm - 60 \cdot \left(\frac{f_{offset}}{MHz} - 0.015 \right) dB$	30 kHz
0.05 MHz ≤ Δf < 0.15 MHz	0. 065 MHz ≤ f_offset < 0.165 MHz	$2dBm - 160 \cdot \left(\frac{f_{offset}}{MHz} - 0.065 \right) dB$	30 kHz
0.15 MHz ≤ Δf < 0.2 MHz	0.165MHz ≤ f_offset < 0.215MHz	-14 dBm	30 kHz
0.2 MHz ≤ Δf < 1 MHz	0.215MHz ≤ f_offset < 1.015MHz	$-14dBm - 15 \cdot \left(\frac{f_offset}{MHz} - 0.215 \right.$	30 kHz
(Note 5)	1.015MHz ≤ f_offset < 1.5 MHz	-26 dBm	30 kHz
1 MHz ≤ Δf ≤ 6 MHz	1.5 MHz ≤ f_offset < 6.5 MHz	-13 dBm	1 MHz
6 MHz ≤ Δf ≤ Δf_{max}	6.5 MHz ≤ f_offset < f_offset_{max}	-15 dBm	1 MHz
NOTE 1: For a BS supporting non-contiguous spectrum operation the minimum requirement within sub-block gaps is calculated as a cumulative sum of adjacent sub blocks on each side of the sub block gap. Exception is Δf ≥ 10MHz from both adjacent sub blocks on each side of the sub-block gap, where the minimum requirement within sub-block gaps shall be -15dBm/1MHz.			

For a BS operating in band 1, 3, 8, 33 or 34, emissions shall not exceed the maximum levels specified in Table 6.6.3.2.2-3 below for 1.4 MHz channel bandwidth:

Table 6.6.3.2.2-3: Regional Wide Area BS operating band unwanted emission limits in band 1, 3, 8, 33 or 34 for 1.4 MHz channel bandwidth for Category B

ONEPLUS - EX. 1027

Frequency offset of measurement filter -3dB point, Δf	Frequency offset of measurement filter centre frequency, f_offset	Minimum requirement (Note 1)	Measurement bandwidth (Note 4)
0 MHz ≤ Δf < 0.05 MHz	0.015 MHz ≤ f_offset < 0.065 MHz	$5dBm - 60 \cdot \left(\frac{f_{offset}}{MHz} - 0.015 \right) dB$	30 kHz
0.05 MHz ≤ Δf < 0.15 MHz	0. 065 MHz ≤ f_offset < 0.165 MHz	$2dBm - 160 \cdot \left(\frac{f_{offset}}{MHz} - 0.065 \right) dB$	30 kHz
0.15 MHz ≤ Δf < 0.2 MHz	0.165MHz ≤ f_offset < 0.215MHz	-14 dBm	30 kHz
0.2 MHz ≤ Δf < 1 MHz	0.215MHz ≤ f_offset < 1.015MHz	$-14dBm - 15 \cdot \left(\frac{f_offset}{MHz} - 0.215 \right)$	30 kHz
(Note 5)	1.015MHz ≤ f_offset < 1.5 MHz	-26 dBm	30 kHz
1 MHz ≤ Δf ≤ 2.8 MHz	1.5 MHz ≤ f_offset < 3.3 MHz	-13 dBm	1 MHz
2.8 MHz ≤ Δf ≤ Δf_{max}	3.3 MHz ≤ f_offset < f_offset_{max}	-15 dBm	1 MHz
NOTE 1: For a BS supporting non-contiguous spectrum operation the minimum requirement within sub-block gaps is calculated as a cumulative sum of adjacent sub blocks on each side of the sub block gap. Exception is Δf ≥ 10MHz from both adjacent sub blocks on each side of the sub-block gap, where the minimum requirement within sub-block gaps shall be -15dBm/1MHz.			

6.6.3.2A Minimum requirements for Local Area BS (Category A and B)

For Local Area BS, emissions shall not exceed the maximum levels specified in Tables 6.6.3.2A-1 to 6.6.3.2A-3.

Table 6.6.3.2A-1: Local Area BS operating band unwanted emission limits for 1.4 MHz channel bandwidth

Frequency offset of measurement filter -3dB point, Δf	Frequency offset of measurement filter centre frequency, f_offset	Minimum requirement (Note 1)	Measurement bandwidth (Note 4)
0 MHz ≤ Δf < 1.4 MHz	0.05 MHz ≤ f_offset < 1.45 MHz	$-21dBm - \frac{10}{1.4} \left(\frac{f_offset}{MHz} - 0.05 \right) dB$	100 kHz
1.4 MHz ≤ Δf < 2.8 MHz	1.45 MHz ≤ f_offset < 2.85 MHz	-31 dBm	100 kHz
2.8 MHz ≤ Δf ≤ Δf_{max}	2.85 MHz ≤ f_offset < f_offset_{max}	-31 dBm	100 kHz
NOTE 1: For a BS supporting non-contiguous spectrum operation the minimum requirement within sub-block gaps is calculated as a cumulative sum of adjacent sub blocks on each side of the sub block gap. Exception is Δf ≥ 10MHz from both adjacent sub blocks on each side of the sub-block gap, where the minimum requirement within sub-block gaps shall be -31dBm/100kHz.			

Table 6.6.3.2A-2: Local Area BS operating band unwanted emission limits for 3 MHz channel bandwidth

Frequency offset of measurement filter -3dB point, Δf	Frequency offset of measurement filter centre frequency, f_offset	Minimum requirement (Note 1)	Measurement bandwidth (Note 4)
0 MHz ≤ Δf < 3 MHz	0.05 MHz ≤ f_offset < 3.05 MHz	$-25dBm - \frac{10}{3} \left(\frac{f_offset}{MHz} - 0.05 \right) dB$	100 kHz
3 MHz ≤ Δf < 6 MHz	3.05 MHz ≤ f_offset < 6.05 MHz	-35 dBm	100 kHz
6 MHz ≤ Δf ≤ Δf_{max}	6.05 MHz ≤ f_offset < f_offset_{max}	-35 dBm	100 kHz
NOTE 1: For a BS supporting non-contiguous spectrum operation the minimum requirement within sub-block gaps is calculated as a cumulative sum of adjacent sub blocks on each side of the sub block gap. Exception is Δf ≥ 10MHz from both adjacent sub blocks on each side of the sub-block gap, where the minimum requirement within sub-block gaps shall be -35dBm/100kHz.			

ONEPLUS - EX. 1027

Table 6.6.3.2A-3: Local Area BS operating band unwanted emission limits for 5, 10, 15 and 20 MHz channel bandwidth

Frequency offset of measurement filter -3dB point, Δf	Frequency offset of measurement filter centre frequency, f_offset	Minimum requirement (Note 1)	Measurement bandwidth (Note 4)
0 MHz ≤ Δf < 5 MHz	0.05 MHz ≤ f_offset < 5.05 MHz	$-30dBm - \frac{7}{5}\left(\frac{f_offset}{MHz} - 0.05\right)dB$	100 kHz
5 MHz ≤ Δf < min(10 MHz, Δf_{max})	5.05 MHz ≤ f_offset < min(10.05 MHz, f_offset_{max})	-37 dBm	100 kHz
10 MHz ≤ Δf ≤ Δf_{max}	10.05 MHz ≤ f_offset < f_offset_{max}	-37 dBm (Note 6)	100 kHz
NOTE 1: For a BS supporting non-contiguous spectrum operation the minimum requirement within sub-block gaps is calculated as a cumulative sum of adjacent sub blocks on each side of the sub block gap. Exception is Δf ≥ 10MHz from both adjacent sub blocks on each side of the sub-block gap, where the minimum requirement within sub-block gaps shall be -37dBm/100kHz.			

6.6.3.2B Minimum requirements for Home BS (Category A and B)

For Home BS, emissions shall not exceed the maximum levels specified in Tables 6.6.3.2B-1 to 6.6.3.2B-3.

Table 6.6.3.2B-1: Home BS operating band unwanted emission limits for 1.4 MHz channel bandwidth

Frequency offset of measurement filter -3dB point, Δf	Frequency offset of measurement filter centre frequency, f_offset	Minimum requirement	Measurement bandwidth (Note 4)
0 MHz ≤ Δf < 1.4 MHz	0.05 MHz ≤ f_offset < 1.45 MHz	$-30dBm - \frac{6}{1.4}\left(\frac{f_offset}{MHz} - 0.05\right)dB$	100 kHz
1.4 MHz ≤ Δf < 2.8 MHz	1.45 MHz ≤ f_offset < 2.85 MHz	-36 dBm	100 kHz
2.8 MHz ≤ Δf ≤ Δf_{max}	3.3 MHz ≤ f_offset < f_offset_{max}	$\begin{cases} P - 52dB, & 2\text{dBm} \le P \le 20\text{dBm} \\ -50dBm, & \text{P<2dBm} \end{cases}$ (Note 7)	1MHz

Table 6.6.3.2B-2: Home BS operating band unwanted emission limits for 3 MHz channel bandwidth

Frequency offset of measurement filter -3dB point, Δf	Frequency offset of measurement filter centre frequency, f_offset	Minimum requirement	Measurement bandwidth (Note 4)
0 MHz ≤ Δf < 3 MHz	0.05 MHz ≤ f_offset < 3.05 MHz	$-34dBm - 2\left(\frac{f_offset}{MHz} - 0.05\right)dB$	100 kHz
3 MHz ≤ Δf < 6 MHz	3.05 MHz ≤ f_offset < 6.05 MHz	-40 dBm	100 kHz
6 MHz ≤ Δf ≤ Δf_{max}	6.5 MHz ≤ f_offset < f_offset_{max}	$\begin{cases} P - 52dB, & 2\text{dBm} \le P \le 20\text{dBm} \\ -50dBm, & \text{P<2dBm} \end{cases}$ (Note 7)	1MHz

ONEPLUS - EX. 1027

Table 6.6.3.2B-3: Home BS operating band unwanted emission limits for 5, 10, 15 and 20 MHz channel bandwidth

Frequency offset of measurement filter -3dB point, Δf	Frequency offset of measurement filter centre frequency, f_offset	Minimum requirement	Measurement bandwidth (Note 4)
0 MHz ≤ Δf < 5 MHz	0.05 MHz ≤ f_offset < 5.05 MHz	$-36dBm - \frac{6}{5}\left(\frac{f_offset}{MHz} - 0.05\right)dB$	100 kHz
5 MHz ≤ Δf < min(10 MHz, Δf_{max})	5.05 MHz ≤ f_offset < min(10.05 MHz, f_offset_{max})	-42 dBm	100 kHz
10 MHz ≤ Δf ≤ Δf_{max}	10.5 MHz ≤ f_offset < f_offset_{max}	$\begin{cases} P - 52dB, & 2\text{dBm} \le P \le 20\text{dBm} \\ -50dBm, & \text{P<2dBm} \end{cases}$ (Note 6, Note 7)	1MHz

6.6.3.2C Minimum requirements for Medium Range BS (Category A and B)

For Medium Range BS, emissions shall not exceed the maximum levels specified in Tables 6.6.3.2C-1 to 6.6.3.2C-6.

Table 6.6.3.2C-1: Medium Range BS operating band unwanted emission limits for 1.4 MHz channel bandwidth, 31 <P ≤ 38 dBm

Frequency offset of measurement filter -3dB point, Δf	Frequency offset of measurement filter centre frequency, f_offset	Minimum requirement	Measurement bandwidth (Note 1)
0 MHz ≤ Δf < 1.4 MHz	0.05 MHz ≤ f_offset < 1.45 MHz	$\text{P} - 45dB - \frac{10}{1.4}\left(\frac{f_offset}{MHz} - 0.05\right)dB$	100 kHz
1.4 MHz ≤ Δf < 2.8 MHz	1.45 MHz ≤ f_offset < 2.85 MHz	P-55dB	100 kHz
2.8 MHz ≤ Δf ≤ Δf_{max}	2.85 MHz ≤ f_offset < f_offset_{max}	-25dBm	100 kHz
NOTE 1: For a BS supporting non-contiguous spectrum operation the minimum requirement within sub-block gaps is calculated as a cumulative sum of adjacent sub blocks on each side of the sub block gap. Exception is Δf ≥ 10MHz from both adjacent sub blocks on each side of the sub-block gap, where the minimum requirement within sub-block gaps shall be -25dBm/100kHz.			

Table 6.6.3.2C-2: Medium Range BS operating band unwanted emission limits for 1.4 MHz channel bandwidth, P ≤ 31 dBm

Frequency offset of measurement filter -3dB point, Δf	Frequency offset of measurement filter centre frequency, f_offset	Minimum requirement	Measurement bandwidth (Note 1)
0 MHz ≤ Δf < 1.4 MHz	0.05 MHz ≤ f_offset < 1.45 MHz	$-14\text{dBm} - \frac{10}{1.4}\left(\frac{f_offset}{MHz} - 0.05\right)dB$	100 kHz
1.4 MHz ≤ Δf < 2.8 MHz	1.45 MHz ≤ f_offset < 2.85 MHz	-24 dBm	100 kHz
2.8 MHz ≤ Δf ≤ Δf_{max}	2.85 MHz ≤ f_offset < f_offset_{max}	-25dBm	100 kHz
NOTE 1: For a BS supporting non-contiguous spectrum operation the minimum requirement within sub-block gaps is calculated as a cumulative sum of adjacent sub blocks on each side of the sub block gap. Exception is Δf ≥ 10MHz from both adjacent sub blocks on each side of the sub-block gap, where the minimum requirement within sub-block gaps shall be -25dBm/100kHz.			

ONEPLUS - EX. 1027

Table 6.6.3.2C-3: Medium Range BS operating band unwanted emission limits for 3 MHz channel bandwidth, 31 <P ≤ 38 dBm

Frequency offset of measurement filter -3dB point, Δf	Frequency offset of measurement filter centre frequency, f_offset	Minimum requirement	Measurement bandwidth (Note 1)
0 MHz ≤ Δf < 3 MHz	0.05 MHz ≤ f_offset < 3.05 MHz	$\mathrm{P - 49dB} - \frac{10}{3}\left(\frac{f_offset}{MHz} - 0.05\right)dB$	100 kHz
3 MHz ≤ Δf < 6 MHz	3.05 MHz ≤ f_offset < 6.05 MHz	P-59dB	100 kHz
6 MHz ≤ Δf ≤ Δf_{max}	6.05 MHz ≤ f_offset < f_offset_{max}	Min(P-59dB, -25dBm)	100 kHz
NOTE 1: For a BS supporting non-contiguous spectrum operation the minimum requirement within sub-block gaps is calculated as a cumulative sum of adjacent sub blocks on each side of the sub block gap. Exception is Δf ≥ 10MHz from both adjacent sub blocks on each side of the sub-block gap, where the minimum requirement within sub-block gaps shall be Min(P-59dB, -25dBm)/100kHz.			

Table 6.6.3.2C-4: Medium Range BS operating band unwanted emission limits for 3 MHz channel bandwidth, P ≤ 31 dBm

Frequency offset of measurement filter -3dB point, Δf	Frequency offset of measurement filter centre frequency, f_offset	Minimum requirement	Measurement bandwidth (Note 1)
0 MHz ≤ Δf < 3 MHz	0.05 MHz ≤ f_offset < 3.05 MHz	$\mathrm{-18dBm} - \frac{10}{3}\left(\frac{f_offset}{MHz} - 0.05\right)dB$	100 kHz
3 MHz ≤ Δf < 6 MHz	3.05 MHz ≤ f_offset < 6.05 MHz	-28 dBm	100 kHz
6 MHz ≤ Δf ≤ Δf_{max}	6.05 MHz ≤ f_offset < f_offset_{max}	-28 dBm	100 kHz
NOTE 1: For a BS supporting non-contiguous spectrum operation the minimum requirement within sub-block gaps is calculated as a cumulative sum of adjacent sub blocks on each side of the sub block gap. Exception is Δf ≥ 10MHz from both adjacent sub blocks on each side of the sub-block gap, where the minimum requirement within sub-block gaps shall be -28dBm/100kHz.			

Table 6.6.3.2C-5: Medium Range BS operating band unwanted emission limits for 5, 10, 15 and 20 MHz channel bandwidth, 31< P ≤ 38 dBm

Frequency offset of measurement filter -3dB point, Δf	Frequency offset of measurement filter centre frequency, f_offset	Minimum requirement	Measurement bandwidth (Note 1)
0 MHz ≤ Δf < 5 MHz	0.05 MHz ≤ f_offset < 5.05 MHz	$\mathrm{P - 53dB} - \frac{7}{5}\left(\frac{f_offset}{MHz} - 0.05\right)dB$	100 kHz
5 MHz ≤ Δf < min(10 MHz, Δf_{max})	5.05 MHz ≤ f_offset < min(10.05 MHz, f_offset_{max})	P-60dB	100 kHz
10 MHz ≤ Δf ≤ Δf_{max}	10.05 MHz ≤ f_offset < f_offset_{max}	Min(P-60dB, -25dBm) (Note 6)	100 kHz
NOTE 1: For a BS supporting non-contiguous spectrum operation the minimum requirement within sub-block gaps is calculated as a cumulative sum of adjacent sub blocks on each side of the sub block gap. Exception is Δf ≥ 10MHz from both adjacent sub blocks on each side of the sub-block gap, where the minimum requirement within sub-block gaps shall be Min(P-60dB, -25dBm)/100kHz.			

ONEPLUS - EX. 1027

Table 6.6.3.2C-6: Medium Range BS operating band unwanted emission limits for 5, 10, 15 and 20 MHz channel bandwidth, P ≤ 31 dBm

Frequency offset of measurement filter -3dB point, Δf	Frequency offset of measurement filter centre frequency, f_offset	Minimum requirement	Measurement bandwidth (Note 1)
0 MHz ≤ Δf < 5 MHz	0.05 MHz ≤ f_offset < 5.05 MHz	$-22\text{ dBm} - \frac{7}{5}\left(\frac{f_offset}{MHz} - 0.05\right)dB$	100 kHz
5 MHz ≤ Δf < min(10 MHz, Δf_{max})	5.05 MHz ≤ f_offset < min(10.05 MHz, f_offset_{max})	-29 dBm	100 kHz
10 MHz ≤ Δf ≤ Δf_{max}	10.05 MHz ≤ f_offset < f_offset_{max}	-29 dBm (Note 6)	100 kHz
NOTE 1: For a BS supporting non-contiguous spectrum operation the minimum requirement within sub-block gaps is calculated as a cumulative sum of adjacent sub blocks on each side of the sub block gap. Exception is Δf ≥ 10MHz from both adjacent sub blocks on each side of the sub-block gap, where the minimum requirement within sub-block gaps shall be -29dBm/100kHz.			

6.6.3.3 Additional requirements

These requirements may be applied for the protection of other systems operating inside or near the E-UTRA BS downlink operating band. The limits may apply as an optional protection of such systems that are deployed in the same geographical area as the E-UTRA BS, or they may be set by local or regional regulation as a mandatory requirement for an E-UTRA operating band. It is in some cases not stated in the present document whether a requirement is mandatory or under what exact circumstances that a limit applies, since this is set by local or regional regulation. An overview of regional requirements in the present document is given in subclause 4.3.

In certain regions the following requirement may apply. For E-UTRA BS operating in Bands 5, 26, 27 or 28, emissions shall not exceed the maximum levels specified in Tables 6.6.3.3-1.

Table 6.6.3.3-1: Additional operating band unwanted emission limits for E-UTRA bands <1GHz

Channel bandwidth	Frequency offset of measurement filter -3dB point, Δf	Frequency offset of measurement filter centre frequency, f_offset	Minimum requirement	Measurement bandwidth (Note 4)
1.4 MHz	0 MHz ≤ Δf < 1 MHz	0.005 MHz ≤ f_offset < 0.995 MHz	-14 dBm	10 kHz
3 MHz	0 MHz ≤ Δf < 1 MHz	0.015 MHz ≤ f_offset < 0.985 MHz	-13 dBm	30 kHz
5 MHz	0 MHz ≤ Δf < 1 MHz	0.015 MHz ≤ f_offset < 0.985 MHz	-15 dBm	30 kHz
10 MHz	0 MHz ≤ Δf < 1 MHz	0.05 MHz ≤ f_offset < 0.95 MHz	-13 dBm	100 kHz
15 MHz	0 MHz ≤ Δf < 1 MHz	0.05 MHz ≤ f_offset < 0.95 MHz	-13 dBm	100 kHz
20 MHz	0 MHz ≤ Δf < 1 MHz	0.05 MHz ≤ f_offset < 0.95 MHz	-13 dBm	100 kHz
All	1 MHz ≤ Δf < Δf_{max}	1.05 MHz ≤ f_offset < f_offset_{max}	-13 dBm	100 kHz

ONEPLUS - EX. 1027

In certain regions the following requirement may apply. For E-UTRA BS operating in Bands 2, 4, 10, 23, 25, 35, 36, 41, emissions shall not exceed the maximum levels specified in Table 6.6.3.3-2.

Table 6.6.3.3-2: Additional operating band unwanted emission limits for E-UTRA bands>1GHz

Channel bandwidth	Frequency offset of measurement filter -3dB point, Δf	Frequency offset of measurement filter centre frequency, f_offset	Minimum requirement	Measurement bandwidth (Note 4)
1.4 MHz	0 MHz ≤ Δf < 1 MHz	0.005 MHz ≤ f_offset < 0.995 MHz	-14 dBm	10 kHz
3 MHz	0 MHz ≤ Δf < 1 MHz	0.015 MHz ≤ f_offset < 0.985 MHz	-13 dBm	30 kHz
5 MHz	0 MHz ≤ Δf < 1 MHz	0.015 MHz ≤ f_offset < 0.985 MHz	-15 dBm	30 kHz
10 MHz	0 MHz ≤ Δf < 1 MHz	0.05 MHz ≤ f_offset < 0.95 MHz	-13 dBm	100 kHz
15 MHz	0 MHz ≤ Δf < 1 MHz	0.05 MHz ≤ f_offset < 0.95 MHz	-15 dBm	100 kHz
20 MHz	0 MHz ≤ Δf < 1 MHz	0.05 MHz ≤ f_offset < 0.95 MHz	-16 dBm	100 kHz
All	1 MHz ≤ $\Delta f < \Delta f_{max}$	1.5 MHz ≤ f_offset < f_offset_{max}	-13 dBm	1 MHz

In certain regions the following requirement may apply. For E-UTRA BS operating in Bands 12, 13, 14, 17, 29 emissions shall not exceed the maximum levels specified in Table 6.6.3.3-3.

Table 6.6.3.3-3: Additional operating band unwanted emission limits for E-UTRA (bands 12, 13, 14, 17 and 29)

Channel bandwidth	Frequency offset of measurement filter -3dB point, Δf	Frequency offset of measurement filter centre frequency, f_offset	Minimum requirement	Measurement bandwidth (Note 4)
All	0 MHz ≤ Δf < 100 kHz	0.015 MHz ≤ f_offset < 0.085 MHz	-13 dBm	30 kHz
All	100 kHz ≤ $\Delta f < \Delta f_{max}$	150 kHz ≤ f_offset < f_offset_{max}	-13 dBm	100 kHz

In certain regions, the following requirements may apply to an E-UTRA TDD BS operating in the same geographic area and in the same operating band as another E-UTRA TDD system without synchronisation. For this case the emissions shall not exceed -52 dBm/MHz in the downlink operating band except in:

- The frequency range from 10 MHz below the lower channel edge to the frequency 10 MHz above the upper channel edge.

In certain regions the following requirement may apply for protection of DTT. For E-UTRA BS operating in Band 20, the level of emissions in the band 470-790 MHz, measured in an 8MHz filter bandwidth on centre frequencies F_{filter} according to Table 6.6.3.3-4, shall not exceed the maximum emission level $P_{EM,N}$ declared by the manufacturer. This requirement applies in the frequency range 470-790 MHz even though part of the range falls in the spurious domain.

Table 6.6.3.3-4: Declared emissions levels for protection of DTT

Filter centre frequency, F_{filter}	Measurement bandwidth	Declared emission level [dBm]
F_{filter} = 8*N + 306 (MHz); 21 ≤ N ≤ 60	8 MHz	$P_{EM,N}$

Note: The regional requirement is defined in terms of EIRP (effective isotropic radiated power), which is dependent on both the BS emissions at the antenna connector and the deployment (including antenna gain and feeder loss). The requirement defined above provides the characteristics of the basestation needed to verify compliance with the regional requirement. Compliance with the regional requirement can be determined using the method outlined in Annex G.

In certain regions the following requirement may apply for the protection of systems operating in frequency bands adjacent to band 1 as defined in clause 5.5, in geographic areas in which both an adjacent band service E-UTRA are deployed.

ONEPLUS - EX. 1027

The power of any spurious emission shall not exceed:

Table 6.6.3.3-5: Emissions limits for protection of adjacent band services

Operating Band	Frequency range	Maximum Level	Measurement Bandwidth
1	2100-2105 MHz	-30 + 3.4 · (f - 2100 MHz) dBm	1 MHz
	2175-2180 MHz	-30 + 3.4 · (2180 MHz - f) dBm	1 MHz

In regions where FCC regulation applies, requirements for protection of GPS according to FCC Order DA 10-534 applies for operation in Band 24. The following normative requirement covers the base station, to be used together with other information about the site installation to verify compliance with the requirement in FCC Order DA 10-534. The requirement applies to BS operating in Band 24 to ensure that appropriate interference protection is provided to the 1559 – 1610 MHz band. This requirement applies to the frequency range 1559-1610 MHz, even though part of this range falls within the spurious domain.

The level of emissions in the 1559 – 1610 MHz band, measured in measurement bandwidth according to Table 6.6.3.3-6 shall not exceed the maximum emission levels P_{E_1MHz} and P_{E_1kHz} declared by the manufacturer.

Table 6.6.3.3-6: Declared emissions levels for protection of the 1559-1610 MHz band

Operating Band	Frequency range	Declared emission level [dBW] (Measurement bandwidth = 1 MHz)	Declared emission level [dBW] of discrete emissions of less than 700 Hz bandwidth (Measurement bandwidth = 1 kHz)
24	1559 - 1610 MHz	P_{E_1MHz}	P_{E_1kHz}

Note: The regional requirement in FCC Order DA 10-534 is defined in terms of EIRP (effective isotropic radiated power), which is dependent on both the BS emissions at the antenna connector and the deployment (including antenna gain and feeder loss). The EIRP level is calculated using: $P_{EIRP} = P_E + G_{ant}$ where P_E denotes the BS unwanted emission level at the antenna connector, G_{ant} equals the BS antenna gain minus feeder loss. The requirement defined above provides the characteristics of the base station needed to verify compliance with the regional requirement.

The following requirement may apply to E-UTRA BS operating in Band 41 in certain regions. Emissions shall not exceed the maximum levels specified in Table 6.6.3.3-7.

Table 6.6.3.3-7: Additional operating band unwanted emission limits for Band 41

Channel bandwidth	Frequency offset of measurement filter -3dB point, Δf	Frequency offset of measurement filter centre frequency, f_offset	Minimum requirement	Measurement bandwidth (Note 4)
10 MHz	10 MHz ≤ Δf < 20 MHz	10.5 MHz ≤ f_offset < 19.5 MHz	-22 dBm	1 MHz
20 MHz	20 MHz ≤ Δf < 40 MHz	20.5 MHz ≤ f_offset < 39.5 MHz	-22 dBm	1 MHz
NOTE: This requirement applies for carriers allocated within 2545-2575MHz.				

The following notes are common to all subclauses in 6.6.3:

NOTE 2: Local or regional regulations may specify another excluded frequency range, which may include frequencies where synchronised E-UTRA TDD systems operate.

NOTE 3: E-UTRA TDD base stations that are synchronized can transmit without these additional co-existence requirements.

ONEPLUS - EX. 1027

NOTE 4: As a general rule for the requirements in subclause 6.6.3, the resolution bandwidth of the measuring equipment should be equal to the measurement bandwidth. However, to improve measurement accuracy, sensitivity and efficiency, the resolution bandwidth may be smaller than the measurement bandwidth. When the resolution bandwidth is smaller than the measurement bandwidth, the result should be integrated over the measurement bandwidth in order to obtain the equivalent noise bandwidth of the measurement bandwidth.

NOTE 5: This frequency range ensures that the range of values of f_offset is continuous.

NOTE 6: The requirement is not applicable when $\Delta f_{max} < 10$ MHz.

NOTE 7: For Home BS, the parameter P is defined as the aggregated maximum power of all transmit antenna ports of Home BS.

6.6.4 Transmitter spurious emissions

The transmitter spurious emission limits apply from 9 kHz to 12.75 GHz, excluding the frequency range from 10 MHz below the lowest frequency of the downlink operating band up to 10 MHz above the highest frequency of the downlink operating band. Exceptions are the requirements in Table 6.6.4.3.1-2, Table 6.6.4.3.1-3, and specifically stated exceptions in Table 6.6.4.3.1-1 that apply also closer than 10 MHz from the downlink operating band. For some operating bands the upper frequency limit is higher than 12.75 GHz.

The requirements shall apply whatever the type of transmitter considered (single carrier or multi-carrier). It applies for all transmission modes foreseen by the manufacturer's specification. Unless otherwise stated, all requirements are measured as mean power (RMS).

6.6.4.1 Mandatory Requirements

The requirements of either subclause 6.6.4.1.1 (Category A limits) or subclause 6.6.4.1.2 (Category B limits) shall apply. The application of either Category A or Category B limits shall be the same as for Operating band unwanted emissions in subclause 6.6.3.

6.6.4.1.1 Spurious emissions (Category A)

6.6.4.1.1.1 Minimum Requirement

The power of any spurious emission shall not exceed the limits in Table 6.6.4.1.1.1-1

Table 6.6.4.1.1.1-1: BS Spurious emission limits, Category A

Frequency range	Maximum level	Measurement Bandwidth	Note
9kHz - 150kHz	-13 dBm	1 kHz	Note 1
150kHz - 30MHz		10 kHz	Note 1
30MHz - 1GHz		100 kHz	Note 1
1GHz - 12.75 GHz		1 MHz	Note 2
12.75 GHz - 5th harmonic of the upper frequency edge of the DL operating band in GHz		1 MHz	Note 2, Note 3
NOTE 1: Bandwidth as in ITU-R SM.329 [2] , s4.1 NOTE 2: Bandwidth as in ITU-R SM.329 [2] , s4.1. Upper frequency as in ITU-R SM.329 [2] , s2.5 table 1 NOTE 3: Applies only for Bands 22, 42 and 43.			

ONEPLUS - EX. 1027

6.6.4.1.2 Spurious emissions (Category B)

6.6.4.1.2.1 Minimum Requirement

The power of any spurious emission shall not exceed the limits in Table 6.6.4.1.2.1-1

Table 6.6.4.1.2.1-1: BS Spurious emissions limits, Category B

Frequency range	Maximum Level	Measurement Bandwidth	Note
9 kHz ↔ 150 kHz	-36 dBm	1 kHz	Note 1
150 kHz ↔ 30 MHz	-36 dBm	10 kHz	Note 1
30 MHz ↔ 1 GHz	-36 dBm	100 kHz	Note 1
1 GHz ↔ 12.75 GHz	-30 dBm	1 MHz	Note 2
12.75 GHz ↔ 5th harmonic of the upper frequency edge of the DL operating band in GHz	-30 dBm	1 MHz	Note 2, Note 3
NOTE 1: Bandwidth as in ITU-R SM.329 [2] , s4.1 NOTE 2: Bandwidth as in ITU-R SM.329 [2] , s4.1. Upper frequency as in ITU-R SM.329 [2] , s2.5 table 1 NOTE 3: Applies only for Bands 22, 42 and 43.			

6.6.4.2 Protection of the BS receiver of own or different BS

This requirement shall be applied for E-UTRA FDD operation in order to prevent the receivers of the BSs being desensitised by emissions from a BS transmitter. It is measured at the transmit antenna port for any type of BS which has common or separate Tx/Rx antenna ports.

6.6.4.2.1 Minimum Requirement

The power of any spurious emission shall not exceed the limits in Table 6.6.4.2-1.

Table 6.6.4.2-1: BS Spurious emissions limits for protection of the BS receiver

	Frequency range	Maximum Level	Measurement Bandwidth	Note
Wide Area BS	F_{UL_low} – F_{UL_high}	-96 dBm	100 kHz	
Medium Range BS	F_{UL_low} – F_{UL_high}	-91 dBm	100 kHz	
Local Area BS	F_{UL_low} – F_{UL_high}	-88 dBm	100 kHz	
Home BS	F_{UL_low} – F_{UL_high}	-88 dBm	100 kHz	

6.6.4.3 Additional spurious emissions requirements

These requirements may be applied for the protection of system operating in frequency ranges other than the E-UTRA BS downlink operating band. The limits may apply as an optional protection of such systems that are deployed in the same geographical area as the E-UTRA BS, or they may be set by local or regional regulation as a mandatory requirement for an E-UTRA operating band. It is in some cases not stated in the present document whether a requirement is mandatory or under what exact circumstances that a limit applies, since this is set by local or regional regulation. An overview of regional requirements in the present document is given in subclause 4.3.

Some requirements may apply for the protection of specific equipment (UE, MS and/or BS) or equipment operating in specific systems (GSM, CDMA, UTRA, E-UTRA, etc.) as listed below.

ONEPLUS - EX. 1027

6.6.4.3.1 Minimum Requirement

The power of any spurious emission shall not exceed the limits of Table 6.6.4.3.1-1 for a BS where requirements for co-existence with the system listed in the first column apply.

Table 6.6.4.3.1-1: BS Spurious emissions limits for E-UTRA BS for co-existence with systems operating in other frequency bands

System type for E-UTRA to co-exist with	Frequency range for co-existence requirement	Maximum Level	Measurement Bandwidth	Note
GSM900	921 - 960 MHz	-57 dBm	100 kHz	This requirement does not apply to E-UTRA BS operating in band 8
	876 - 915 MHz	-61 dBm	100 kHz	For the frequency range 880-915 MHz, this requirement does not apply to E-UTRA BS operating in band 8, since it is already covered by the requirement in sub-clause 6.6.4.2.
DCS1800	1805 - 1880 MHz	-47 dBm	100 kHz	This requirement does not apply to E-UTRA BS operating in band 3.
	1710 - 1785 MHz	-61 dBm	100 kHz	This requirement does not apply to E-UTRA BS operating in band 3, since it is already covered by the requirement in sub-clause 6.6.4.2.
PCS1900	1930 - 1990 MHz	-47 dBm	100 kHz	This requirement does not apply to E-UTRA BS operating in band 2,band 25 or band 36.
	1850 - 1910 MHz	-61 dBm	100 kHz	This requirement does not apply to E-UTRA BS operating in band 2 or 25, since it is already covered by the requirement in sub-clause 6.6.4.2. This requirement does not apply to E-UTRA BS operating in band 35.
GSM850 or CDMA850	869 - 894 MHz	-57 dBm	100 kHz	This requirement does not apply to E-UTRA BS operating in band 5 or 26. This requirement applies to E-UTRA BS operating in Band 27 for the frequency range 879-894 MHz.
	824 - 849 MHz	-61 dBm	100 kHz	This requirement does not apply to E-UTRA BS operating in band 5 or 26, since it is already covered by the requirement in sub-clause 6.6.4.2. For E-UTRA BS operating in Band 27, it applies 3 MHz below the Band 27 downlink operating band.
UTRA FDD Band I or E-UTRA Band 1	2110 - 2170 MHz	-52 dBm	1 MHz	This requirement does not apply to E-UTRA BS operating in band 1,
	1920 - 1980 MHz	-49 dBm	1 MHz	This requirement does not apply to E-UTRA BS operating in band 1, since it is already covered by the requirement in sub-clause 6.6.4.2.
UTRA FDD Band II or E-UTRA Band 2	1930 - 1990 MHz	-52 dBm	1 MHz	This requirement does not apply to E-UTRA BS operating in band 2 or 25.
	1850 - 1910 MHz	-49 dBm	1 MHz	This requirement does not apply to E-UTRA BS operating in band 2 or 25, since it is already covered by the requirement in sub-clause 6.6.4.2
UTRA FDD Band III or E-UTRA Band 3	1805 - 1880 MHz	-52 dBm	1 MHz	This requirement does not apply to E-UTRA BS operating in band 3 or 9.
	1710 - 1785 MHz	-49 dBm	1 MHz	This requirement does not apply to E-UTRA BS operating in band 3, since it is already covered by the requirement in sub-clause 6.6.4.2. For E-UTRA BS operating in band 9, it applies for 1710 MHz to 1749.9 MHz and 1784.9 MHz to 1785 MHz, while the rest is covered in sub-clause 6.6.4.2.
UTRA FDD Band IV or E-UTRA Band 4	2110 - 2155 MHz	-52 dBm	1 MHz	This requirement does not apply to E-UTRA BS operating in band 4 or 10
	1710 - 1755 MHz	-49 dBm	1 MHz	This requirement does not apply to E-UTRA BS operating in band 4 or 10, since it is already covered by the requirement in sub-clause 6.6.4.2.
UTRA FDD Band V or E-UTRA Band 5	869 - 894 MHz	-52 dBm	1 MHz	This requirement does not apply to E-UTRA BS operating in band 5 or 26. This requirement applies to E-UTRA BS operating in Band 27 for the frequency range 879-894 MHz.

ONEPLUS - EX. 1027

	824 - 849 MHz	-49 dBm	1 MHz	This requirement does not apply to E-UTRA BS operating in band 5 or 26, since it is already covered by the requirement in sub-clause 6.6.4.2. For E-UTRA BS operating in Band 27, it applies 3 MHz below the Band 27 downlink operating band.
UTRA FDD Band VI, XIX or E-UTRA Band 6, 18, 19	860 - 890 MHz	-52 dBm	1 MHz	This requirement does not apply to E-UTRA BS operating in band 6, 18, 19.
	815 - 830 MHz	-49 dBm	1 MHz	This requirement does not apply to E-UTRA BS operating in band 18, since it is already covered by the requirement in sub-clause 6.6.4.2.
	830 - 845 MHz	-49 dBm	1 MHz	This requirement does not apply to E-UTRA BS operating in band 6, 19, since it is already covered by the requirement in sub-clause 6.6.4.2.
UTRA FDD Band VII or E-UTRA Band 7	2620 - 2690 MHz	-52 dBm	1 MHz	This requirement does not apply to E-UTRA BS operating in band 7.
	2500 - 2570 MHz	-49 dBm	1 MHz	This requirement does not apply to E-UTRA BS operating in band 7, since it is already covered by the requirement in sub-clause 6.6.4.2.
UTRA FDD Band VIII or E-UTRA Band 8	925 - 960 MHz	-52 dBm	1 MHz	This requirement does not apply to E-UTRA BS operating in band 8.
	880 - 915 MHz	-49 dBm	1 MHz	This requirement does not apply to E-UTRA BS operating in band 8, since it is already covered by the requirement in sub-clause 6.6.4.2.
UTRA FDD Band IX or E-UTRA Band 9	1844.9 - 1879.9 MHz	-52 dBm	1 MHz	This requirement does not apply to E-UTRA BS operating in band 3 or 9.
	1749.9 - 1784.9 MHz	-49 dBm	1 MHz	This requirement does not apply to E-UTRA BS operating in band 3 or 9, since it is already covered by the requirement in sub-clause 6.6.4.2.
UTRA FDD Band X or E-UTRA Band 10	2110 - 2170 MHz	-52 dBm	1 MHz	This requirement does not apply to E-UTRA BS operating in band 4 or 10
	1710 - 1770 MHz	-49 dBm	1 MHz	This requirement does not apply to E-UTRA BS operating in band 10, since it is already covered by the requirement in sub-clause 6.6.4.2. For E-UTRA BS operating in Band 4, it applies for 1755 MHz to 1770 MHz, while the rest is covered in sub-clause 6.6.4.2.
UTRA FDD Band XI or XXI or E-UTRA Band 11 or 21	1475.9 - 1510.9 MHz	-52 dBm	1 MHz	This requirement does not apply to E-UTRA BS operating in band 11 or 21
	1427.9 - 1447.9 MHz	-49 dBm	1 MHz	This requirement does not apply to E-UTRA BS operating in band 11, since it is already covered by the requirement in sub-clause 6.6.4.2.
	1447.9 - 1462.9 MHz	-49 dBm	1 MHz	This requirement does not apply to E-UTRA BS operating in band 21, since it is already covered by the requirement in sub-clause 6.6.4.2.
UTRA FDD Band XII or E-UTRA Band 12	729 - 746 MHz	-52 dBm	1 MHz	This requirement does not apply to E-UTRA BS operating in band 12.
	699 - 716 MHz	-49 dBm	1 MHz	This requirement does not apply to E-UTRA BS operating in band 12, since it is already covered by the requirement in sub-clause 6.6.4.2. For E-UTRA BS operating in Band 29, it applies 1 MHz below the Band 29 downlink operating band (Note 6).
UTRA FDD Band XIII or E-UTRA Band 13	746 - 756 MHz	-52 dBm	1 MHz	This requirement does not apply to E-UTRA BS operating in band 13.
	777 - 787 MHz	-49 dBm	1 MHz	This requirement does not apply to E-UTRA BS operating in band 13, since it is already covered by the requirement in sub-clause 6.6.4.2.
UTRA FDD Band XIV or E-UTRA Band 14	758 - 768 MHz	-52 dBm	1 MHz	This requirement does not apply to E-UTRA BS operating in band 14.
	788 - 798 MHz	-49 dBm	1 MHz	This requirement does not apply to E-UTRA BS operating in band 14, since it is already covered by the requirement in sub-clause 6.6.4.2.
E-UTRA Band 17	734 - 746 MHz	-52 dBm	1 MHz	This requirement does not apply to E-UTRA BS operating in band 17.

ONEPLUS - EX. 1027

	704 - 716 MHz	-49 dBm	1 MHz	This requirement does not apply to E-UTRA BS operating in band 17, since it is already covered by the requirement in subclause 6.6.4.2. For E-UTRA BS operating in Band 29, it applies 1 MHz below the Band 29 downlink operating band (Note 6).
UTRA FDD Band XX or E-UTRA Band 20	791 - 821 MHz	-52 dBm	1 MHz	This requirement does not apply to E-UTRA BS operating in band 20.
	832 - 862 MHz	-49 dBm	1 MHz	This requirement does not apply to E-UTRA BS operating in band 20, since it is already covered by the requirement in subclause 6.6.4.2.
UTRA FDD Band XXII or E-UTRA Band 22	3510 – 3590 MHz	-52 dBm	1 MHz	This requirement does not apply to E-UTRA BS operating in band 22 or 42.
	3410 – 3490 MHz	-49 dBm	1 MHz	This requirement does not apply to E-UTRA BS operating in band 22, since it is already covered by the requirement in subclause 6.6.4.2. This requirement does not apply to E-UTRA BS operating in Band 42
E-UTRA Band 23	2180 - 2200 MHz	-52 dBm	1 MHz	This requirement does not apply to E-UTRA BS operating in band 23.
	2000 - 2020 MHz	-49 dBm	1 MHz	This requirement does not apply to E-UTRA BS operating in band 23, since it is already covered by the requirement in subclause 6.6.4.2. This requirement does not apply to BS operating in Bands 2 or 25, where the limits are defined separately.
	2000 – 2010 MHz	-30 dBm	1 MHz	This requirement only applies to E-UTRA BS operating in Band 2 or Band 25. This requirement applies starting 5 MHz above the Band 25 downlink operating band. (Note 4)
	2010 – 2020 MHz	-49 dBm	1 MHz	
E-UTRA Band 24	1525 – 1559 MHz	-52 dBm	1 MHz	This requirement does not apply to E-UTRA BS operating in band 24.
	1626.5 – 1660.5 MHz	-49 dBm	1 MHz	This requirement does not apply to E-UTRA BS operating in band 24, since it is already covered by the requirement in subclause 6.6.4.2.
UTRA FDD Band XXV or E-UTRA Band 25	1930 – 1995 MHz	-52 dBm	1 MHz	This requirement does not apply to E-UTRA BS operating in band 2 or 25
	1850 – 1915 MHz	-49 dBm	1 MHz	This requirement does not apply to E-UTRA BS operating in band 25, since it is already covered by the requirement in subclause 6.6.4.2. For E-UTRA BS operating in Band 2, it applies for 1910 MHz to 1915 MHz, while the rest is covered in sub-clause 6.6.4.2
UTRA FDD Band XXVI or E-UTRA Band 26	859 – 894 MHz	-52 dBm	1 MHz	This requirement does not apply to E-UTRA BS operating in band 5 or 26. This requirement applies to E-UTRA BS operating in Band 27 for the frequency range 879-894 MHz.
	814 – 849 MHz	-49 dBm	1 MHz	This requirement does not apply to E-UTRA BS operating in band 26, since it is already covered by the requirement in subclause 6.6.4.2. For E-UTRA BS operating in Band 5, it applies for 814 MHz to 824 MHz, while the rest is covered in sub-clause 6.6.4.2. For E-UTRA BS operating in Band 27, it applies 3 MHz below the Band 27 downlink operating band.
E-UTRA Band 27	852 – 869 MHz	-52 dBm	1 MHz	This requirement does not apply to E-UTRA BS operating in Band 5, 26 or 27.
	807 – 824 MHz	-49 dBm	1 MHz	This requirement does not apply to E-UTRA BS operating in Band 27, since it is already covered by the requirement in subclause 6.6.4.2. For E-UTRA BS operating in Band 26, it applies for 807 MHz to 814 MHz, while the rest is covered in sub-clause 6.6.4.2. This requirement also applies to E-UTRA BS operating in Band 28, starting 4 MHz above the Band 28 downlink operating band (Note 5).
E-UTRA Band 28	758 - 803 MHz	-52 dBm	1 MHz	This requirement does not apply to E-UTRA BS operating in band 28 or 44.
	703 - 748 MHz	-49 dBm	1 MHz	This requirement does not apply to E-UTRA BS operating in band 28, since it is already covered by the requirement in subclause 6.6.4.2. This requirement does not apply to E-UTRA BS operating in Band 44.

ONEPLUS - EX. 1027

E-UTRA Band 29	717 – 728 MHz	-52 dBm	1 MHz	This requirement does not apply to E-UTRA BS operating in Band 29.
UTRA TDD Band a) or E-UTRA Band 33	1900 - 1920 MHz	-52 dBm	1 MHz	This requirement does not apply to E-UTRA BS operating in Band 33.
UTRA TDD Band a) or E-UTRA Band 34	2010 - 2025 MHz	-52 dBm	1 MHz	This requirement does not apply eto E-UTRA BS operating in Band 34.
UTRA TDD Band b) or E-UTRA Band 35	1850 - 1910 MHz	-52 dBm	1 MHz	This requirement does not apply to E-UTRA BS operating in Band 35.
UTRA TDD Band b) or E-UTRA Band 36	1930 - 1990 MHz	-52 dBm	1 MHz	This requirement does not apply to E-UTRA BS operating in Band 2 and 36.
UTRA TDD Band c) or E-UTRA Band 37	1910 - 1930 MHz	-52 dBm	1 MHz	This is not applicable to E-UTRA BS operating in Band 37. This unpaired band is defined in ITU-R M.1036, but is pending any future deployment.
UTRA TDD Band d) or E-UTRA Band 38	2570 - 2620 MHz	-52 dBm	1 MHz	This requirement does not apply to E-UTRA BS operating in Band 38.
UTRA TDD Band f) or E-UTRA Band 39	1880 - 1920MHz	-52 dBm	1 MHz	This is not applicable to E-UTRA BS operating in Band 39.
UTRA TDD Band e) or E-UTRA Band 40	2300 - 2400MHz	-52 dBm	1 MHz	This is not applicable to E-UTRA BS operating in Band 40.
E-UTRA Band 41	2496 - 2690 MHz	-52 dBm	1 MHz	This is not applicable to E-UTRA BS operating in Band 41.
E-UTRA Band 42	3400 - 3600 MHz	-52 dBm	1 MHz	This is not applicable to E-UTRA BS operating in Band 42 or 43.
E-UTRA Band 43	3600 - 3800 MHz	-52 dBm	1 MHz	This is not applicable to E-UTRA BS operating in Band 42 or 43.
E-UTRA Band 44	703 - 803 MHz	-52 dBm	1 MHz	This is not applicable to E-UTRA BS operating in Band 28 or 44.
NOTE 4: This requirement does not apply to a Band 2 E-UTRA BS of an earlier release. In addition, it does not apply to an E-UTRA Band 2 BS from an earlier release manufactured before 31 December, 2012, which is upgraded to support Rel-10 features, where the upgrade does not affect existing RF parts of the radio unit related to this requirement.				

NOTE 1: As defined in the scope for spurious emissions in this clause, except for the cases where the noted requirements apply to a BS operating in Band 25, Band 27, Band 28 or Band 29, the co-existence requirements in Table 6.6.4.3.1-1 do not apply for the 10 MHz frequency range immediately outside the downlink operating band (see Table 5.5-1). Emission limits for this excluded frequency range may be covered by local or regional requirements.

NOTE 2: Table 6.6.4.3.1-1 assumes that two operating bands, where the frequency ranges in Table 5.5-1 would be overlapping, are not deployed in the same geographical area. For such a case of operation with overlapping frequency arrangements in the same geographical area, special co-existence requirements may apply that are not covered by the 3GPP specifications.

NOTE 3: TDD base stations deployed in the same geographical area, that are synchronized and use the same or adjacent operating bands can transmit without additional co-existence requirements. For unsynchronized base stations, special co-existence requirements may apply that are not covered by the 3GPP specifications.

NOTE 5: For E-UTRA Band 28 BS, specific solutions may be required to fulfil the spurious emissions limits for E-UTRA BS for co-existence with E-UTRA Band 27 UL operating band.

NOTE 6: For E-UTRA Band 29 BS, specific solutions may be required to fulfil the spurious emissions limits for E-UTRA BS for co-existence with UTRA Band XII or E-UTRA Band 12 UL operating band or E-UTRA Band 17 UL operating band.

ONEPLUS - EX. 1027

The power of any spurious emission shall not exceed the limits of Table 6.6.4.3.1-1x for a Home BS where requirements for co-existence with a Home BS type listed in the first column apply.

Table 6.6.4.3.1-1x: Home BS Spurious emissions limits for co-existence with Home BS operating in other frequency bands

Type of coexistence BS	Frequency range for co-location requirement	Maximum Level	Measurement Bandwidth	Note
UTRA FDD Band I or E-UTRA Band 1	1920 - 1980 MHz	-71 dBm	100 kHz	This requirement does not apply to Home BS operating in band 1, since it is already covered by the requirement in sub-clause 6.6.4.2.
UTRA FDD Band II or E-UTRA Band 2	1850 - 1910 MHz	-71 dBm	100 kHz	This requirement does not apply to Home BS operating in band 2 or 25, since it is already covered by the requirement in sub-clause 6.6.4.2.
UTRA FDD Band III or E-UTRA Band 3	1710 - 1785 MHz	-71 dBm	100 kHz	This requirement does not apply to Home BS operating in band 3, since it is already covered by the requirement in sub-clause 6.6.4.2. For Home BS operating in band 9, it applies for 1710 MHz to 1749.9 MHz and 1784.9 MHz to 1785 MHz, while the rest is covered in sub-clause 6.6.4.2.
UTRA FDD Band IV or E-UTRA Band 4	1710 - 1755 MHz	-71 dBm	100 kHz	This requirement does not apply to Home BS operating in band 4 or 10, since it is already covered by the requirement in sub-clause 6.6.4.2.
UTRA FDD Band V or E-UTRA Band 5	824 - 849 MHz	-71 dBm	100 kHz	This requirement does not apply to Home BS operating in band 5 or 26, since it is already covered by the requirement in sub-clause 6.6.4.2. For E-UTRA BS operating in Band 27, it applies 3 MHz below the Band 27 downlink operating band.
UTRA FDD Band VI, XIX or E-UTRA Band 6, 18, 19	815 - 830 MHz	-71 dBm	100 kHz	This requirement does not apply to Home BS operating in band 18, since it is already covered by the requirement in sub-clause 6.6.4.2.
	830 - 845 MHz	-71 dBm	100 kHz	This requirement does not apply to Home BS operating in band 6, 19, since it is already covered by the requirement in sub-clause 6.6.4.2.
UTRA FDD Band VII or E-UTRA Band 7	2500 - 2570 MHz	-71 dBm	100 kHz	This requirement does not apply to Home BS operating in band 7, since it is already covered by the requirement in sub-clause 6.6.4.2.
UTRA FDD Band VIII or E-UTRA Band 8	880 - 915 MHz	-71 dBm	100 kHz	This requirement does not apply to Home BS operating in band 8, since it is already covered by the requirement in sub-clause 6.6.4.2.
UTRA FDD Band IX or E-UTRA Band 9	1749.9 - 1784.9 MHz	-71 dBm	100 kHz	This requirement does not apply to Home BS operating in band 3 or 9, since it is already covered by the requirement in sub-clause 6.6.4.2.

ONEPLUS - EX. 1027

UTRA FDD Band X or E-UTRA Band 10	1710 - 1770 MHz	-71 dBm	100 kHz	This requirement does not apply to Home BS operating in band 10, since it is already covered by the requirement in sub-clause 6.6.4.2. For Home BS operating in Band 4, it applies for 1755 MHz to 1770 MHz, while the rest is covered in sub-clause 6.6.4.2.
UTRA FDD Band XI, XXI or E-UTRA Band 11, 21	1427.9 - 1447.9 MHz	-71 dBm	100 kHz	This requirement does not apply to Home BS operating in band 11, since it is already covered by the requirement in sub-clause 6.6.4.2.
	1447.9 - 1462.9 MHz	-71 dBm	100 kHz	This requirement does not apply to Home BS operating in band 21, since it is already covered by the requirement in sub-clause 6.6.4.2.
UTRA FDD Band XII or E-UTRA Band 12	699 - 716 MHz	-71 dBm	100 kHz	This requirement does not apply to Home BS operating in band 12, since it is already covered by the requirement in sub-clause 6.6.4.2. For Home BS operating in Band 29, it applies 1 MHz below the Band 29 downlink operating band (Note 5)
UTRA FDD Band XIII or E-UTRA Band 13	777 - 787 MHz	-71 dBm	100 kHz	This requirement does not apply to Home BS operating in band 13, since it is already covered by the requirement in sub-clause 6.6.4.2.
UTRA FDD Band XIV or E-UTRA Band 14	788 - 798 MHz	-71 dBm	100 kHz	This requirement does not apply to Home BS operating in band 14, since it is already covered by the requirement in sub-clause 6.6.4.2.
E-UTRA Band 17	704 - 716 MHz	-71 dBm	100 kHz	This requirement does not apply to Home BS operating in band 17, since it is already covered by the requirement in sub-clause 6.6.4.2. For Home BS operating in Band 29, it applies 1 MHz below the Band 29 downlink operating band (Note 5)
UTRA FDD Band XX or E-UTRA Band 20	832 - 862 MHz	-71 dBm	100 kHz	This requirement does not apply to Home BS operating in band 20, since it is already covered by the requirement in sub-clause 6.6.4.2.
UTRA FDD Band XXII or E-UTRA Band 22	3410 - 3490 MHz	-71 dBm	100 kHz	This requirement does not apply to Home BS operating in band 22, since it is already covered by the requirement in sub-clause 6.6.4.2. This requirement does not apply to Home BS operating in Band 42
E-UTRA Band 23	2000 - 2020 MHz	TBD	TBD	This requirement does not apply to Home BS operating in band 23, since it is already covered by the requirement in sub-clause 6.6.4.2.
E-UTRA Band 24	1626.5 – 1660.5 MHz	-71 dBm	100 kHz	This requirement does not apply to Home BS operating in band 24, since it is already covered by the requirement in sub-clause 6.6.4.2.
UTRA FDD Band XXV or E-UTRA Band 25	1850 - 1915 MHz	-71 dBm	100 kHz	This requirement does not apply to Home BS operating in band 25, since it is already covered by the requirement in sub-clause 6.6.4.2

ONEPLUS - EX. 1027

UTRA FDD Band XXVI or E-UTRA Band 26	814 - 849 MHz	-71 dBm	100 kHz	This requirement does not apply to Home BS operating in band 26, since it is already covered by the requirement in sub-clause 6.6.4.2. For Home BS operating in Band 5, it applies for 814 MHz to 824 MHz, while the rest is covered in sub-clause 6.6.4.2. For E-UTRA BS operating in Band 27, it applies 3 MHz below the Band 27 downlink operating band.
E-UTRA Band 27	807 - 824 MHz	-71 dBm	100 kHz	This requirement does not apply to E-UTRA BS operating in Band 27, since it is already covered by the requirement in subclause 6.6.4.2. For E-UTRA BS operating in Band 26, it applies for 807 MHz to 814 MHz, while the rest is covered in sub-clause 6.6.4.2. This requirement also applies to E-UTRA BS operating in Band 28, starting 4 MHz above the Band 28 downlink operating band (Note 4).
E-UTRA Band 28	703 – 748 MHz	-71 dBm	100 kHz	This requirement does not apply to Home BS operating in band 28, since it is already covered by the requirement in sub-clause 6.6.4.2. This requirement does not apply to Home BS operating in Band 44.
UTRA TDD Band a) or E-UTRA Band 33	1900 - 1920 MHz	-71 dBm	100 kHz	This requirement does not apply to Home BS operating in Band 33
UTRA TDD Band a) or E-UTRA Band 34	2010 - 2025 MHz	-71 dBm	100 kHz	This requirement does not apply to Home BS operating in Band 34
UTRA TDD Band b) or E-UTRA Band 35	1850 – 1910 MHz	-71 dBm	100 kHz	This requirement does not apply to Home BS operating in Band 35
UTRA TDD Band b) or E-UTRA Band 36	1930 - 1990 MHz	-71 dBm	100 kHz	This requirement does not apply to Home BS operating in Band 2 and 36
UTRA TDD Band c) or E-UTRA Band 37	1910 - 1930 MHz	-71 dBm	100 kHz	This is not applicable to Home BS operating in Band 37. This unpaired band is defined in ITU-R M.1036, but is pending any future deployment.
UTRA TDD Band d) or E-UTRA Band 38	2570 - 2620 MHz	-71 dBm	100 kHz	This requirement does not apply to Home BS operating in Band 38.
UTRA TDD Band f) or E-UTRA Band 39	1880 - 1920MHz	-71 dBm	100 kHz	This is not applicable to Home BS operating in Band 39
UTRA TDD Band e) or E-UTRA Band 40	2300 - 2400MHz	-71 dBm	100 kHz	This is not applicable to Home BS operating in Band 40
E-UTRA Band 41	2496 – 2690 MHz	-71 dBm	100 kHz	This is not applicable to Home BS operating in Band 41
E-UTRA Band 42	3400 - 3600 MHz	-71 dBm	100 kHz	This is not applicable to Home BS operating in Band 42 or 43
E-UTRA Band 43	3600 - 3800 MHz	-71 dBm	100 kHz	This is not applicable to Home BS operating in Band 42 or 43
E-UTRA Band 44	703 - 803 MHz	-71 dBm	100 kHz	This is not applicable to Home BS operating in Band 28 or 44

NOTE 1: As defined in the scope for spurious emissions in this clause, except for the cases where the noted requirements apply to a BS operating in Band 27, Band 28 or Band 29, the coexistence requirements in Table 6.6.4.3.1-1x do not apply for the 10 MHz frequency range immediately outside the Home BS transmit frequency range of a downlink operating band (see Table 5.5-1). Emission limits for this excluded frequency range may be covered by local or regional requirements.

ONEPLUS - EX. 1027

NOTE 2: Table 6.6.4.3.1-1x assumes that two operating bands, where the frequency ranges in Table 5.5-1 would be overlapping, are not deployed in the same geographical area. For such a case of operation with overlapping frequency arrangements in the same geographical area, special co-existence requirements may apply that are not covered by the 3GPP specifications.

NOTE 3: TDD base stations deployed in the same geographical area, that are synchronized and use the same or adjacent operating bands can transmit without additional co-existence requirements. For unsynchronized base stations, special co-existence requirements may apply that are not covered by the 3GPP specifications.

NOTE 4: For E-UTRA Band 28 BS, specific solutions may be required to fulfil the spurious emissions limits for E-UTRA BS for co-existence with E-UTRA Band 27 UL operating band.

NOTE 5: For E-UTRA Band 29 BS, specific solutions may be required to fulfil the spurious emissions limits for E-UTRA BS for co-existence with UTRA Band XII or E-UTRA Band 12 UL operating band or E-UTRA Band 17 UL operating band.

The following requirement may be applied for the protection of PHS. This requirement is also applicable at specified frequencies falling between 10 MHz below the lowest BS transmitter frequency of the downlink operating band and 10 MHz above the highest BS transmitter frequency of the downlink operating band.

The power of any spurious emission shall not exceed:

Table 6.6.4.3.1-2: E-UTRA BS Spurious emissions limits for BS for co-existence with PHS

Frequency range	Maximum Level	Measurement Bandwidth	Note
1884.5 - 1915.7 MHz	-41 dBm	300 kHz	Applicable when co-existence with PHS system operating in 1884.5-1915.7MHz

The following requirement shall be applied to BS operating in Bands 13 and 14 to ensure that appropriate interference protection is provided to 700 MHz public safety operations. This requirement is also applicable at the frequency range from 10 MHz below the lowest frequency of the BS downlink operating band up to 10 MHz above the highest frequency of the BS downlink operating band.

The power of any spurious emission shall not exceed:

Table 6.6.4.3.1-3: BS Spurious emissions limits for protection of 700 MHz public safety operations

Operating Band	Frequency range	Maximum Level	Measurement Bandwidth	Note
13	763 - 775 MHz	-46 dBm	6.25 kHz	
13	793 - 805 MHz	-46 dBm	6.25 kHz	
14	769 - 775 MHz	-46 dBm	6.25 kHz	
14	799 - 805 MHz	-46 dBm	6.25 kHz	

Table 6.6.4.3.1-4: Void

The following requirement shall be applied to BS operating in Band 26 to ensure that appropriate interference protection is provided to 800 MHz public safety operations. This requirement is also applicable at the frequency range from 10 MHz below the lowest frequency of the BS downlink operating band up to 10 MHz above the highest frequency of the BS downlink operating band.

The power of any spurious emission shall not exceed:

ONEPLUS - EX. 1027

Table 6.6.4.3.1-5: BS Spurious emissions limits for protection of 800 MHz public safety operations

Operating Band	Frequency range	Maximum Level	Measurement Bandwidth	Note
26	851 - 859 MHz	-13 dBm	100 kHz	Applicable for offsets > 37.5kHz from the channel edge

The following requirement may apply to E-UTRA BS operating in Band 41 in certain regions. This requirement is also applicable at the frequency range from 10 MHz below the lowest frequency of the BS downlink operating band up to 10 MHz above the highest frequency of the BS downlink operating band.

The power of any spurious emission shall not exceed:

Table 6.6.4.3.1-6: Additional E-UTRA BS Spurious emissions limits for Band 41

Frequency range	Maximum Level	Measurement Bandwidth	Note
2505MHz – 2535MHz	-42dBm	1 MHz	
2535MHz – 2630MHz	-22dBm	1 MHz	Applicable at offsets ≥ 250% of channel bandwidth from carrier frequency.
2630MHz – 2655MHz	-30dBm	1 MHz	
NOTE: This requirement applies for 10 or 20 MHz E-UTRA carriers allocated within 2545-2575MHz.			

6.6.4.4 Co-location with other base stations

These requirements may be applied for the protection of other BS receivers when GSM900, DCS1800, PCS1900, GSM850, CDMA850, UTRA FDD, UTRA TDD and/or E-UTRA BS are co-located with an E-UTRA BS.

The requirements assume a 30 dB coupling loss between transmitter and receiver and are based on co-location with base stations of the same class.

ONEPLUS - EX. 1027

6.6.4.4.1 Minimum Requirement

The power of any spurious emission shall not exceed the limits of Table 6.6.4.4.1-1 for a Wide Area BS where requirements for co-location with a BS type listed in the first column apply.

Table 6.6.4.4.1-1: BS Spurious emissions limits for Wide Area BS co-located with another BS

Type of co-located BS	Frequency range for co-location requirement	Maximum Level	Measurement Bandwidth	Note
Macro GSM900	876-915 MHz	-98 dBm	100 kHz	
Macro DCS1800	1710 - 1785 MHz	-98 dBm	100 kHz	
Macro PCS1900	1850 - 1910 MHz	-98 dBm	100 kHz	
Macro GSM850 or CDMA850	824 - 849 MHz	-98 dBm	100 kHz	
WA UTRA FDD Band I or E-UTRA Band 1	1920 - 1980 MHz	-96 dBm	100 kHz	
WA UTRA FDD Band II or E-UTRA Band 2	1850 - 1910 MHz	-96 dBm	100 kHz	
WA UTRA FDD Band III or E-UTRA Band 3	1710 - 1785 MHz	-96 dBm	100 kHz	
WA UTRA FDD Band IV or E-UTRA Band 4	1710 - 1755 MHz	-96 dBm	100 kHz	
WA UTRA FDD Band V or E-UTRA Band 5	824 - 849 MHz	-96 dBm	100 kHz	
WA UTRA FDD Band VI, XIX or E-UTRA Band 6, 19	830 - 845 MHz	-96 dBm	100 kHz	
WA UTRA FDD Band VII or E-UTRA Band 7	2500 - 2570 MHz	-96 dBm	100 kHz	
WA UTRA FDD Band VIII or E-UTRA Band 8	880 - 915 MHz	-96 dBm	100 kHz	
WA UTRA FDD Band IX or E-UTRA Band 9	1749.9 - 1784.9 MHz	-96 dBm	100 kHz	
WA UTRA FDD Band X or E-UTRA Band 10	1710 - 1770 MHz	-96 dBm	100 kHz	
WA UTRA FDD Band XI or E-UTRA Band 11	1427.9 –1447.9 MHz	-96 dBm	100 kHz	
WA UTRA FDD Band XII or E-UTRA Band 12	699 - 716 MHz	-96 dBm	100 kHz	
WA UTRA FDD Band XIII or E-UTRA Band 13	777 - 787 MHz	-96 dBm	100 kHz	
WA UTRA FDD Band XIV or E-UTRA Band 14	788 - 798 MHz	-96 dBm	100 kHz	
WA E-UTRA Band 17	704 - 716 MHz	-96 dBm	100 kHz	
WA E-UTRA Band 18	815 - 830 MHz	-96 dBm	100 kHz	
WA UTRA FDD Band XX or E-UTRA Band 20	832 - 862 MHz	-96 dBm	100 kHz	
WA UTRA FDD Band XXI or E-UTRA Band 21	1447.9 – 1462.9 MHz	-96 dBm	100 kHz	
WA UTRA FDD Band XXII or E-UTRA Band 22	3410 – 3490 MHz	-96 dBm	100 kHz	This is not applicable to E-UTRA BS operating in Band 42
WA E-UTRA Band 23	2000 - 2020 MHz	-96 dBm	100 kHz	
WA E-UTRA Band 24	1626.5 – 1660.5 MHz	-96 dBm	100 kHz	
WA UTRA FDD Band XXV or E-UTRA Band 25	1850 – 1915 MHz	-96 dBm	100 kHz	
WA UTRA FDD Band XXVI or E-UTRA Band 26	814 – 849 MHz	-96 dBm	100 kHz	
WA E-UTRA Band 27	807 - 824 MHz	-96 dBm	100 kHz	

ONEPLUS - EX. 1027

WA E-UTRA Band 28	703 – 748 MHz	-96 dBm	100 kHz	This is not applicable to E-UTRA BS operating in Band 44
WA UTRA TDD Band a) or E-UTRA Band 33	1900 - 1920 MHz	-96 dBm	100 kHz	This is not applicable to E-UTRA BS operating in Band 33
WA UTRA TDD Band a) or E-UTRA Band 34	2010 - 2025 MHz	-96 dBm	100 kHz	This is not applicable to E-UTRA BS operating in Band 34
WA UTRA TDD Band b) or E-UTRA Band 35	1850 – 1910 MHz	-96 dBm	100 kHz	This is not applicable to E-UTRA BS operating in Band 35
WA UTRA TDD Band b) or E-UTRA Band 36	1930 - 1990 MHz	-96 dBm	100 kHz	This is not applicable to E-UTRA BS operating in Band 2 and 36
WA UTRA TDD Band c) or E-UTRA Band 37	1910 - 1930 MHz	-96 dBm	100 kHz	This is not applicable to E-UTRA BS operating in Band 37. This unpaired band is defined in ITU-R M.1036, but is pending any future deployment.
WA UTRA TDD Band d) or E-UTRA Band 38	2570 – 2620 MHz	-96 dBm	100 kHz	This is not applicable to E-UTRA BS operating in Band 38.
WA UTRA TDD Band f) or E-UTRA Band 39	1880 – 1920MHz	-96 dBm	100 kHz	This is not applicable to E-UTRA BS operating in Band 33 and 39
WA UTRA TDD Band e) or E-UTRA Band 40	2300 – 2400MHz	-96 dBm	100 kHz	This is not applicable to E-UTRA BS operating in Band 40
WA E-UTRA Band 41	2496 – 2690 MHz	-96 dBm	100 kHz	This is not applicable to E-UTRA BS operating in Band 41
WA E-UTRA Band 42	3400 – 3600 MHz	-96 dBm	100 kHz	This is not applicable to E-UTRA BS operating in Band 42 or 43
WA E-UTRA Band 43	3600 – 3800 MHz	-96 dBm	100 kHz	This is not applicable to E-UTRA BS operating in Band 42 or 43
WA E-UTRA Band 44	703 – 803 MHz	-96 dBm	100 kHz	This is not applicable to E-UTRA BS operating in Band 28 or 44

ONEPLUS - EX. 1027

The power of any spurious emission shall not exceed the limits of Table 6.6.4.4.1-2 for a Local Area BS where requirements for co-location with a BS type listed in the first column apply.

Table 6.6.4.4.1-2: BS Spurious emissions limits for Local Area BS co-located with another BS

Type of co-located BS	Frequency range for co-location requirement	Maximum Level	Measurement Bandwidth	Note
Pico GSM900	876-915 MHz	-70 dBm	100 kHz	
Pico DCS1800	1710 - 1785 MHz	-80 dBm	100 kHz	
Pico PCS1900	1850 - 1910 MHz	-80 dBm	100 kHz	
Pico GSM850	824 - 849 MHz	-70 dBm	100 kHz	
LA UTRA FDD Band I or E-UTRA Band 1	1920 - 1980 MHz	-88 dBm	100 kHz	
LA UTRA FDD Band II or E-UTRA Band 2	1850 - 1910 MHz	-88 dBm	100 kHz	
LA UTRA FDD Band III or E-UTRA Band 3	1710 - 1785 MHz	-88 dBm	100 kHz	
LA UTRA FDD Band IV or E-UTRA Band 4	1710 - 1755 MHz	-88 dBm	100 kHz	
LA UTRA FDD Band V or E-UTRA Band 5	824 - 849 MHz	-88 dBm	100 kHz	
LA UTRA FDD Band VI, XIX or E-UTRA Band 6, 19	830 - 845 MHz	-88 dBm	100 kHz	
LA UTRA FDD Band VII or E-UTRA Band 7	2500 - 2570 MHz	-88 dBm	100 kHz	
LA UTRA FDD Band VIII or E-UTRA Band 8	880 - 915 MHz	-88 dBm	100 kHz	
LA UTRA FDD Band IX or E-UTRA Band 9	1749.9 - 1784.9 MHz	-88 dBm	100 kHz	
LA UTRA FDD Band X or E-UTRA Band 10	1710 - 1770 MHz	-88 dBm	100 kHz	
LA UTRA FDD Band XI or E-UTRA Band 11	1427.9 - 1447.9 MHz	-88 dBm	100 kHz	
LA UTRA FDD Band XII or E-UTRA Band 12	699 - 716 MHz	-88 dBm	100 kHz	
LA UTRA FDD Band XIII or E-UTRA Band 13	777 - 787 MHz	-88 dBm	100 kHz	
LA UTRA FDD Band XIV or E-UTRA Band 14	788 - 798 MHz	-88 dBm	100 kHz	
LA E-UTRA Band 17	704 - 716 MHz	-88 dBm	100 kHz	
LA E-UTRA Band 18	815 - 830 MHz	-88 dBm	100 kHz	
LA UTRA FDD Band XX or E-UTRA Band 20	832 - 862 MHz	-88 dBm	100 kHz	
LA UTRA FDD Band XXI or E-UTRA Band 21	1447.9 - 1462.9 MHz	-88 dBm	100 kHz	
LA UTRA FDD Band XXII or E-UTRA Band 22	3410 – 3490 MHz	-88 dBm	100 kHz	This is not applicable to E-UTRA BS operating in Band 42
LA E-UTRA Band 23	2000 - 2020 MHz	-88 dBm	100 kHz	
LA E-UTRA Band 24	1626.5 – 1660.5 MHz	-88 dBm	100 kHz	
LA UTRA FDD Band XXV or E-UTRA Band 25	1850 – 1915 MHz	-88 dBm	100 kHz	
LA UTRA FDD Band XXVI or E-UTRA Band 26	814 – 849 MHz	-88 dBm	100 kHz	
LA E-UTRA Band 27	807 - 824 MHz	-88 dBm	100 kHz	
LA E-UTRA Band 28	703 – 748 MHz	-88 dBm	100 KHz	This is not applicable to E-UTRA BS operating in Band 44
LA UTRA TDD Band a) or E-UTRA Band 33	1900 - 1920 MHz	-88 dBm	100 kHz	This is not applicable to E-UTRA BS operating in Band 33

ONEPLUS - EX. 1027

LA UTRA TDD Band a) or E-UTRA Band 34	2010 - 2025 MHz	-88 dBm	100 kHz	This is not applicable to E-UTRA BS operating in Band 34
LA UTRA TDD Band b) or E-UTRA Band 35	1850 – 1910 MHz	-88 dBm	100 kHz	This is not applicable to E-UTRA BS operating in Band 35
LA UTRA TDD Band b) or E-UTRA Band 36	1930 - 1990 MHz	-88 dBm	100 kHz	This is not applicable to E-UTRA BS operating in Band 2 and 36
LA UTRA TDD Band c) or E-UTRA Band 37	1910 - 1930 MHz	-88 dBm	100 kHz	This is not applicable to E-UTRA BS operating in Band 37. This unpaired band is defined in ITU-R M.1036, but is pending any future deployment.
LA UTRA TDD Band d) or E-UTRA Band 38	2570 – 2620 MHz	-88 dBm	100 kHz	This is not applicable to E-UTRA BS operating in Band 38.
LA LUTRA TDD Band f) or E-UTRA Band 39	1880 – 1920MHz	-88 dBm	100 kHz	This is not applicable to E-UTRA BS operating in Band 33 and 39
LA UTRA TDD Band e) or E-UTRA Band 40	2300 – 2400MHz	-88 dBm	100 kHz	This is not applicable to E-UTRA BS operating in Band 40
LA E-UTRA Band 41	2496 – 2690 MHz	-88 dBm	100 kHz	This is not applicable to E-UTRA BS operating in Band 41
LA E-UTRA Band 42	3400 – 3600 MHz	-88 dBm	100 kHz	This is not applicable to E-UTRA BS operating in Band 42 or 43
LA E-UTRA Band 43	3600 – 3800 MHz	-88 dBm	100 kHz	This is not applicable to E-UTRA BS operating in Band 42 or 43
LA E-UTRA Band 44	703 – 803 MHz	-88 dBm	100 kHz	This is not applicable to E-UTRA BS operating in Band 28 or 44

ONEPLUS - EX. 1027

The power of any spurious emission shall not exceed the limits of Table 6.6.4.4.1-3 for a Medium Range BS where requirements for co-location with a BS type listed in the first column apply.

Table 6.6.4.4.1-3: BS Spurious emissions limits for Medium range BS co-located with another BS

Type of co-located BS	Frequency range for co-location requirement	Maximum Level	Measurement Bandwidth	Note
Micro/MR GSM900	876-915 MHz	-91 dBm	100 kHz	
Micro/MR DCS1800	1710 - 1785 MHz	-91 dBm	100 kHz	
Micro/MR PCS1900	1850 - 1910 MHz	-91 dBm	100 kHz	
Micro/MR GSM850	824 - 849 MHz	-91 dBm	100 kHz	
MR UTRA FDD Band I or E-UTRA Band 1	1920 - 1980 MHz	-91 dBm	100 kHz	
MR UTRA FDD Band II or E-UTRA Band 2	1850 - 1910 MHz	-91 dBm	100 kHz	
MR UTRA FDD Band III or E-UTRA Band 3	1710 - 1785 MHz	-91 dBm	100 kHz	
MR UTRA FDD Band IV or E-UTRA Band 4	1710 - 1755 MHz	-91 dBm	100 kHz	
MR UTRA FDD Band V or E-UTRA Band 5	824 - 849 MHz	-91 dBm	100 kHz	
MR UTRA FDD Band VI, XIX or E-UTRA Band 6, 19	830 - 850 MHz	-91 dBm	100 kHz	
MR UTRA FDD Band VII or E-UTRA Band 7	2500 - 2570 MHz	-91 dBm	100 KHz	
MR UTRA FDD Band VIII or E-UTRA Band 8	880 - 915 MHz	-91 dBm	100 KHz	
MR UTRA FDD Band IX or E-UTRA Band 9	1749.9 - 1784.9 MHz	-91 dBm	100 KHz	
MR UTRA FDD Band X or E-UTRA Band 10	1710 - 1770 MHz	-91 dBm	100 kHz	
MR UTRA FDD Band XI or E-UTRA Band 11	1427.9 - 1447.9 MHz	-91 dBm	100 kHz	
MR UTRA FDD Band XII or E-UTRA Band 12	699 - 716 MHz	-91 dBm	100 kHz	
MR UTRA FDD Band XIII or E-UTRA Band 13	777 - 787 MHz	-91 dBm	100 kHz	
MR UTRA FDD Band XIV or E-UTRA Band 14	788 - 798 MHz	-91 dBm	100 kHz	
MR E-UTRA Band 17	704 - 716 MHz	-91 dBm	100 kHz	
MR E-UTRA Band 18	815 - 830 MHz	-91 dBm	100 KHz	
MR UTRA FDD Band XX or E-UTRA Band 20	832 - 862 MHz	-91 dBm	100 KHz	
MR UTRA FDD Band XXI or E-UTRA Band 21	1447.9 - 1462.9 MHz	-91 dBm	100 KHz	
MR UTRA FDD Band XXII or E-UTRA Band 22	3410 – 3490 MHz	-91 dBm	100 kHz	This is not applicable to E-UTRA BS operating in Band 42
MR E-UTRA Band 23	2000 - 2020 MHz	-91 dBm	100 kHz	
MR E-UTRA Band 24	1626.5 – 1660.5 MHz	-91 dBm	100 KHz	
MR UTRA FDD Band XXV or E-UTRA Band 25	1850 – 1915 MHz	-91 dBm	100 kHz	
MR UTRA FDD Band XXVI or E-UTRA Band 26	814 – 849 MHz	-91 dBm	100 kHz	
MR E-UTRA Band 27	807 - 824 MHz	-91 dBm	100 kHz	
MR E-UTRA Band 28	703 – 748 MHz	-91 dBm	100 KHz	This is not applicable to E-UTRA BS operating in Band 44
MR UTRA TDD Band a) or E-UTRA Band 33	1900 - 1920 MHz	-91 dBm	100 kHz	This is not applicable to E-UTRA BS operating in Band 33

ONEPLUS - EX. 1027

MR UTRA TDD Band a) or E-UTRA Band 34	2010 - 2025 MHz	-91 dBm	100 kHz	This is not applicable to E-UTRA BS operating in Band 34
MR UTRA TDD Band b) or E-UTRA Band 35	1850 – 1910 MHz	-91 dBm	100 kHz	This is not applicable to E-UTRA BS operating in Band 35
MR UTRA TDD Band b) or E-UTRA Band 36	1930 - 1990 MHz	-91 dBm	100 kHz	This is not applicable to E-UTRA BS operating in Band 2 and 36
MR UTRA TDD Band c) or E-UTRA Band 37	1910 - 1930 MHz	-91 dBm	100 kHz	This is not applicable to E-UTRA BS operating in Band 37. This unpaired band is defined in ITU-R M.1036, but is pending any future deployment.
MR UTRA TDD Band d) or E-UTRA Band 38	2570 – 2620 MHz	-91 dBm	100 kHz	This is not applicable to E-UTRA BS operating in Band 38.
MR LUTRA TDD Band f) or E-UTRA Band 39	1880 – 1920MHz	-91 dBm	100 kHz	This is not applicable to E-UTRA BS operating in Band 33 and 39
MR UTRA TDD Band e) or E-UTRA Band 40	2300 – 2400MHz	-91 dBm	100 kHz	This is not applicable to E-UTRA BS operating in Band 40
MR E-UTRA Band 41	2496 – 2690 MHz	-91 dBm	100 kHz	This is not applicable to E-UTRA BS operating in Band 41
MR E-UTRA Band 42	3400 – 3600 MHz	-91 dBm	100 kHz	This is not applicable to E-UTRA BS operating in Band 42 or 43
MR E-UTRA Band 43	3600 – 3800 MHz	-91 dBm	100 kHz	This is not applicable to E-UTRA BS operating in Band 42 or 43
MR E-UTRA Band 44	703 – 803 MHz	-91 dBm	100 kHz	This is not applicable to E-UTRA BS operating in Band 28 or 44

NOTE 1: As defined in the scope for spurious emissions in this clause, the co-location requirements in Table 6.6.4.4.1-1 to Table 6.6.4.4.1-3 do not apply for the 10 MHz frequency range immediately outside the BS transmit frequency range of a downlink operating band (see Table 5.5-1). The current state-of-the-art technology does not allow a single generic solution for co-location with other system on adjacent frequencies for 30dB BS-BS minimum coupling loss. However, there are certain site-engineering solutions that can be used. These techniques are addressed in TR 25.942 [8].

NOTE 2: Table 6.6.4.4.1-1 to Table 6.6.4.4.1-3 assume that two operating bands, where the corresponding BS transmit and receive frequency ranges in Table 5.5-1 would be overlapping, are not deployed in the same geographical area. For such a case of operation with overlapping frequency arrangements in the same geographical area, special co-location requirements may apply that are not covered by the 3GPP specifications.

NOTE 3: Co-located TDD base stations that are synchronized and using the same or adjacent operating band can transmit without special co-locations requirements. For unsynchronized base stations, special co-location requirements may apply that are not covered by the 3GPP specifications.

ONEPLUS - EX. 1027

6.7 Transmitter intermodulation

The transmit intermodulation requirement is a measure of the capability of the transmitter to inhibit the generation of signals in its non linear elements caused by presence of the own transmit signal and an interfering signal reaching the transmitter via the antenna. The requirement applies during the transmitter ON period and the transmitter transient period.

6.7.1 Minimum requirement

The transmitter intermodulation level is the power of the intermodulation products when an interfering signal is injected into the antenna connector. The wanted signal channel bandwidth $BW_{Channel}$ shall be the maximum bandwidth supported by the base station. The offset of the interfering signal from the wanted signal shall be as in Table 6.7.1-1.

The requirement is always applicable outside the Base Station RF bandwidth edges. The interfering signal offset is defined relative to the lower (upper) edge.

For a BS operating in non-contiguous spectrum, the requirement is also applicable inside a sub-block gap for interfering signal offsets where the interfering signal falls completely within the sub-block gap. The interfering signal offset is defined relative to the sub-block edges.

Table 6.7.1-1 Interfering and wanted signals for the Transmitter intermodulation requirement

Parameter	Value
Wanted signal	E-UTRA single carrier, or multi-carrier, or multiple intra-band contiguously or non-contiguously aggregated carriers
Interfering signal type	E-UTRA signal of channel bandwidth 5 MHz
Interfering signal level	Mean power level 30 dB below the mean power of the wanted signal
Interfering signal centre frequency offset from the lower (upper) edge of the wanted signal or edge of sub-block inside a sub-block gap	± 2.5 MHz ± 7.5 MHz ± 12.5 MHz
NOTE1: Interfering signal positions that are partially or completely outside of the downlink operating band of the base station are excluded from the requirement, unless the interfering signal positions fall within the frequency range of adjacent downlink operating bands in the same geographical area. In case that none of the interfering signal positions fall completely within the frequency range of the downlink operating band, TS 36.141 [4] provides further guidance regarding appropriate test requirements. NOTE2: NOTE 1 is not applied in Band 1, 3, 8, 9, 11, 18, 19, 21, 28, 34 in certain regions.	

The transmitter intermodulation level shall not exceed the unwanted emission limits in subclause 6.6 in the presence of an interfering signal according to Table 6.7.1-1. The measurement may be limited to frequencies on which third and fifth order intermodulation products appear, considering the width of these products.

6.7.2 Additional requirement for Band 41

In certain regions the following requirement may apply. For E-UTRA BS operating in Band 41, the transmitter intermodulation level shall not exceed the maximum levels specified in Table 6.6.3.3-7 in the presence of an interfering signal according to Table 6.7.2-1. The measurement may be limited to frequencies on which third and fifth order intermodulation products appear.

Table 6.7.2-1 Interfering and wanted signals for the additional transmitter intermodulation requirement for Band 41

Parameter	Value
Wanted signal	E-UTRA single carrier (NOTE)
Interfering signal type	E-UTRA signal of the same channel bandwidth as the wanted signal
Interfering signal level	Mean power level 30 dB below the mean power of the wanted signal
Interfering signal centre frequency offset from the lower (upper) centre of the wanted signal	± $BW_{Channel}$ ± 2 x $BW_{Channel}$
NOTE: This requirement applies for 10 or 20 MHz E-UTRA carriers allocated within 2545-2575MHz.	

ONEPLUS - EX. 1027

7 Receiver characteristics

7.1 General

The requirements in clause 7 are expressed for a single receiver antenna connector. For receivers with antenna diversity, the requirements apply for each receiver antenna connector.

Unless otherwise stated, the receiver characteristics are specified at the BS antenna connector (test port A) with a full complement of transceivers for the configuration in normal operating conditions. For FDD operation the requirements in clause 7 shall be met with the transmitter on. If any external apparatus such as a RX amplifier, a filter or the combination of such devices is used, requirements apply at the far end antenna connector (port B).

NOTE: In normal operating conditions the BS in FDD operation is configured to transmit and receive at the same time. The transmitter may be off for some of the tests as specifed in 36.141 [4].

Unless otherwise stated the requirements in clause 7 apply during the base station receive period.

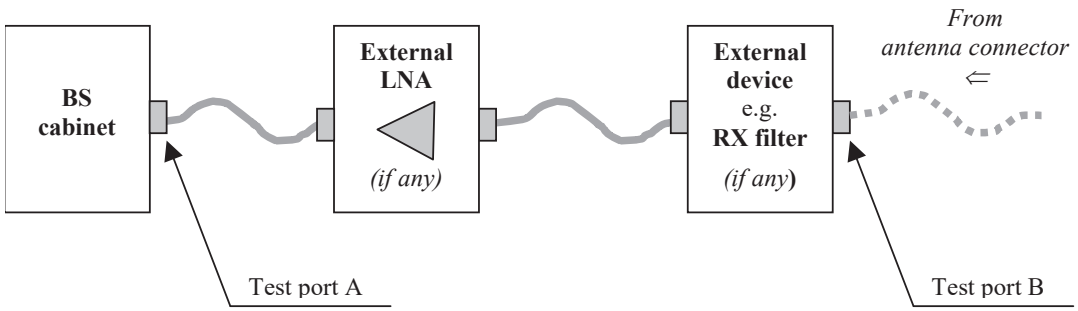

Figure 7.1: Receiver test ports

The throughput requirements defined for the receiver characteristics in this clause do not assume HARQ retransmissions.

When the BS is configured to receive multiple carriers, all the throughput requirements are applicable for each received carrier. For ACS, blocking and intermodulation characteristics, the negative offsets of the interfering signal apply relative to the lower edge and positive offsets of the interfering signal apply relative to the upper edge.

7.2 Reference sensitivity level

The reference sensitivity power level $P_{REFSENS}$ is the minimum mean power received at the antenna connector at which a throughput requirement shall be met for a specified reference measurement channel.

7.2.1 Minimum requirement

The throughput shall be ≥ 95% of the maximum throughput of the reference measurement channel as specified in Annex A with parameters specified in Table 7.2.1-1 for Wide Area BS, in Table 7.2.1-2 for Local Area BS, in Table 7.2.1-3 for Home BS and in Table 7.2.1-4 for Medium Range BS.

ONEPLUS - EX. 1027

Table 7.2.1-1: Wide Area BS reference sensitivity levels

E-UTRA channel bandwidth [MHz]	Reference measurement channel	Reference sensitivity power level, PREFSENS [dBm]
1.4	FRC A1-1 in Annex A.1	-106.8
3	FRC A1-2 in Annex A.1	-103.0
5	FRC A1-3 in Annex A.1	-101.5
10	FRC A1-3 in Annex A.1*	-101.5
15	FRC A1-3 in Annex A.1*	-101.5
20	FRC A1-3 in Annex A.1*	-101.5
Note*: $P_{REFSENS}$ is the power level of a single instance of the reference measurement channel. This requirement shall be met for each consecutive application of a single instance of FRC A1-3 mapped to disjoint frequency ranges with a width of 25 resource blocks each		

Table 7.2.1-2: Local Area BS reference sensitivity levels

E-UTRA channel bandwidth [MHz]	Reference measurement channel	Reference sensitivity power level, PREFSENS [dBm]
1.4	FRC A1-1 in Annex A.1	-98.8
3	FRC A1-2 in Annex A.1	-95.0
5	FRC A1-3 in Annex A.1	-93.5
10	FRC A1-3 in Annex A.1*	-93.5
15	FRC A1-3 in Annex A.1*	-93.5
20	FRC A1-3 in Annex A.1*	-93.5
Note*: $P_{REFSENS}$ is the power level of a single instance of the reference measurement channel. This requirement shall be met for each consecutive application of a single instance of FRC A1-3 mapped to disjoint frequency ranges with a width of 25 resource blocks each		

Table 7.2.1-3: Home BS reference sensitivity levels

E-UTRA channel bandwidth [MHz]	Reference measurement channel	Reference sensitivity power level, PREFSENS [dBm]
1.4	FRC A1-1 in Annex A.1	-98.8
3	FRC A1-2 in Annex A.1	-95.0
5	FRC A1-3 in Annex A.1	-93.5
10	FRC A1-3 in Annex A.1*	-93.5
15	FRC A1-3 in Annex A.1*	-93.5
20	FRC A1-3 in Annex A.1*	-93.5
Note*: $P_{REFSENS}$ is the power level of a single instance of the reference measurement channel. This requirement shall be met for each consecutive application of a single instance of FRC A1-3 mapped to disjoint frequency ranges with a width of 25 resource blocks each		

ONEPLUS - EX. 1027

Table 7.2.1-4: Medium Range BS reference sensitivity levels

E-UTRA channel bandwidth [MHz]	Reference measurement channel	Reference sensitivity power level, PREFSENS [dBm]
1.4	FRC A1-1 in Annex A.1	-101.8
3	FRC A1-2 in Annex A.1	-98.0
5	FRC A1-3 in Annex A.1	-96.5
10	FRC A1-3 in Annex A.1*	-96.5
15	FRC A1-3 in Annex A.1*	-96.5
20	FRC A1-3 in Annex A.1*	-96.5
Note*: $P_{REFSENS}$ is the power level of a single instance of the reference measurement channel. This requirement shall be met for each consecutive application of a single instance of FRC A1-3 mapped to disjoint frequency ranges with a width of 25 resource blocks each.		

7.3 Dynamic range

The dynamic range is specified as a measure of the capability of the receiver to receive a wanted signal in the presence of an interfering signal inside the received channel bandwidth. In this condition a throughput requirement shall be met for a specified reference measurement channel. The interfering signal for the dynamic range requirement is an AWGN signal.

7.3.1 Minimum requirement

The throughput shall be ≥ 95% of the maximum throughput of the reference measurement channel as specified in Annex A with parameters specified in Table 7.3.1-1 for Wide Area BS, in Table 7.3.1-2 for Local Area BS, in Table 7.3.1-3 for Home BS and in Table 7.3.1-4 for Medium Range BS.

ONEPLUS - EX. 1027

Table 7.3.1-1: Wide Area BS dynamic range

E-UTRA channel bandwidth [MHz]	Reference measurement channel	Wanted signal mean power [dBm]	Interfering signal mean power [dBm] / BW_{Config}	Type of interfering signal
1.4	FRC A2-1 in Annex A.2	-76.3	-88.7	AWGN
3	FRC A2-2 in Annex A.2	-72.4	-84.7	AWGN
5	FRC A2-3 in Annex A.2	-70.2	-82.5	AWGN
10	FRC A2-3 in Annex A.2*	-70.2	-79.5	AWGN
15	FRC A2-3 in Annex A.2*	-70.2	-77.7	AWGN
20	FRC A2-3 in Annex A.2*	-70.2	-76.4	AWGN

Table 7.3.1-2: Local Area BS dynamic range

E-UTRA channel bandwidth [MHz]	Reference measurement channel	Wanted signal mean power [dBm]	Interfering signal mean power [dBm] / BW_{Config}	Type of interfering signal
1.4	FRC A2-1 in Annex A.2	-68.3	-80.7	AWGN
3	FRC A2-2 in Annex A.2	-64.4	-76.7	AWGN
5	FRC A2-3 in Annex A.2	-62.2	-74.5	AWGN
10	FRC A2-3 in Annex A.2*	-62.2	-71.5	AWGN
15	FRC A2-3 in Annex A.2*	-62.2	-69.7	AWGN
20	FRC A2-3 in Annex A.2*	-62.2	-68.4	AWGN

Table 7.3.1-3: Home BS dynamic range

E-UTRA channel bandwidth [MHz]	Reference measurement channel	Wanted signal mean power [dBm]	Interfering signal mean power [dBm] / BW_{Config}	Type of interfering signal
1.4	FRC A2-1 in Annex A.2	-31.8	-44.2	AWGN
3	FRC A2-2 in Annex A.2	-27.9	-40.2	AWGN
5	FRC A2-3 in Annex A.2	-25.7	-38	AWGN
10	FRC A2-3 in Annex A.2*	-25.7	-35	AWGN
15	FRC A2-3 in Annex A.2*	-25.7	-33.2	AWGN
20	FRC A2-3 in Annex A.2*	-25.7	-31.9	AWGN

ONEPLUS - EX. 1027

Table 7.3.1-4: Medium Range BS dynamic range

E-UTRA channel bandwidth [MHz]	Reference measurement channel	Wanted signal mean power [dBm]	Interfering signal mean power [dBm] / BWConfig	Type of interfering signal
1.4	FRC A2-1 in Annex A.2	-71.3	-83.7	AWGN
3	FRC A2-2 in Annex A.2	-67.4	-79.7	AWGN
5	FRC A2-3 in Annex A.2	-65.2	-77.5	AWGN
10	FRC A2-3 in Annex A.2*	-65.2	-74.5	AWGN
15	FRC A2-3 in Annex A.2*	-65.2	-72.7	AWGN
20	FRC A2-3 in Annex A.2*	-65.2	-71.4	AWGN

7.4 In-channel selectivity

In-channel selectivity (ICS) is a measure of the receiver ability to receive a wanted signal at its assigned resource block locations in the presence of an interfering signal received at a larger power spectral density. In this condition a throughput requirement shall be met for a specified reference measurement channel. The interfering signal shall be an E-UTRA signal as specified in Annex C and shall be time aligned with the wanted signal.

7.4.1 Minimum requirement

The throughput shall be ≥ 95% of the maximum throughput of the reference measurement channel as specified in Annex A with parameters specified in Table 7.4.1-1 for Wide Area BS, in Table 7.4.1-2 for Local Area BS, in Table 7.4.1-3 for Home BS and in Table 7.4.1-4 for Medium Range BS.

Table 7.4.1-1 Wide Area BS in-channel selectivity

E-UTRA channel bandwidth (MHz)	Reference measurement channel	Wanted signal mean power [dBm]	Interfering signal mean power [dBm]	Type of interfering signal
1.4	A1-4 in Annex A.1	-106.9	-87	1.4 MHz E-UTRA signal, 3 RBs
3	A1-5 in Annex A.1	-102.1	-84	3 MHz E-UTRA signal, 6 RBs
5	A1-2 in Annex A.1	-100.0	-81	5 MHz E-UTRA signal, 10 RBs
10	A1-3 in Annex A.1	-98.5	-77	10 MHz E-UTRA signal, 25 RBs
15	A1-3 in Annex A.1*	-98.5	-77	15 MHz E-UTRA signal, 25 RBs*
20	A1-3 in Annex A.1*	-98.5	-77	20 MHz E-UTRA signal, 25 RBs*
Note*: Wanted and interfering signal are placed adjacently around F_c				

ONEPLUS - EX. 1027

Table 7.4.1-2 Local Area BS in-channel selectivity

E-UTRA channel bandwidth (MHz)	Reference measurement channel	Wanted signal mean power [dBm]	Interfering signal mean power [dBm]	Type of interfering signal
1.4	A1-4 in Annex A.1	-98.9	-79	1.4 MHz E-UTRA signal, 3 RBs
3	A1-5 in Annex A.1	-94.1	-76	3 MHz E-UTRA signal, 6 RBs
5	A1-2 in Annex A.1	-92.0	-73	5 MHz E-UTRA signal, 10 RBs
10	A1-3 in Annex A.1	-90.5	-69	10 MHz E-UTRA signal, 25 RBs
15	A1-3 in Annex A.1*	-90.5	-69	15 MHz E-UTRA signal, 25 RBs*
20	A1-3 in Annex A.1*	-90.5	-69	20 MHz E-UTRA signal, 25 RBs*
Note*: Wanted and interfering signal are placed adjacently around F_c				

Table 7.4.1-3 Home BS in-channel selectivity

E-UTRA channel bandwidth (MHz)	Reference measurement channel	Wanted signal mean power [dBm]	Interfering signal mean power [dBm]	Type of interfering signal
1.4	A1-4 in Annex A.1	-98.9	-79	1.4 MHz E-UTRA signal, 3 RBs
3	A1-5 in Annex A.1	-94.1	-76	3 MHz E-UTRA signal, 6 RBs
5	A1-2 in Annex A.1	-92.0	-73	5 MHz E-UTRA signal, 10 RBs
10	A1-3 in Annex A.1	-90.5	-69	10 MHz E-UTRA signal, 25 RBs
15	A1-3 in Annex A.1*	-90.5	-69	15 MHz E-UTRA signal, 25 RBs*
20	A1-3 in Annex A.1*	-90.5	-69	20 MHz E-UTRA signal, 25 RBs*
Note*: Wanted and interfering signal are placed adjacently around F_c				

Table 7.4.1-4 Medium Range BS in-channel selectivity

E-UTRA channel bandwidth (MHz)	Reference measurement channel	Wanted signal mean power [dBm]	Interfering signal mean power [dBm]	Type of interfering signal
1.4	A1-4 in Annex A.1	-101.9	-82	1.4 MHz E-UTRA signal, 3 RBs
3	A1-5 in Annex A.1	-97.1	-79	3 MHz E-UTRA signal, 6 RBs
5	A1-2 in Annex A.1	-95.0	-76	5 MHz E-UTRA signal, 10 RBs
10	A1-3 in Annex A.1	-93.5	-72	10 MHz E-UTRA signal, 25 RBs
15	A1-3 in Annex A.1*	-93.5	-72	15 MHz E-UTRA signal, 25 RBs*
20	A1-3 in Annex A.1*	-93.5	-72	20 MHz E-UTRA signal, 25 RBs*
Note*: Wanted and interfering signal are placed adjacently around F_c				

ONEPLUS - EX. 1027

7.5 Adjacent Channel Selectivity (ACS) and narrow-band blocking

Adjacent channel selectivity (ACS) is a measure of the receiver ability to receive a wanted signal at its assigned channel frequency in the presence of an adjacent channel signal with a specified centre frequency offset of the interfering signal to the band edge of a victim system. The interfering signal shall be an E-UTRA signal as specified in Annex C.

7.5.1 Minimum requirement

The throughput shall be ≥ 95% of the maximum throughput of the reference measurement channel.

For Wide Area BS, the wanted and the interfering signal coupled to the BS antenna input are specified in Tables 7.5.1-1 and 7.5.1-2 for narrowband blocking and in Table 7.5.1-3 for ACS. The reference measurement channel for the wanted signal is identified in Table 7.2.1-1 for each channel bandwidth and further specified in Annex A.

For Medium Range BS, the wanted and the interfering signal coupled to the BS antenna input are specified in Tables 7.5.1-1 and 7.5.1-2 for narrowband blocking and in Table 7.5.1-6 for ACS. The reference measurement channel for the wanted signal is identified in Table 7.2.1-4 for each channel bandwidth and further specified in Annex A.

For Local Area BS, the wanted and the interfering signal coupled to the BS antenna input are specified in Tables 7.5.1-1 and 7.5.1-2 for narrowband blocking and in Table 7.5.1-4 for ACS. The reference measurement channel for the wanted signal is identified in Table 7.2.1-2 for each channel bandwidth and further specified in Annex A.

For Home BS, the wanted and the interfering signal coupled to the BS antenna input are specified in Tables 7.5.1-1 and 7.5.1-2 for narrowband blocking and in Table 7.5.1-5 for ACS. The reference measurement channel for the wanted signal is identified in Table 7.2.1-3 for each channel bandwidth and further specified in Annex A.

The ACS and narrowband blocking requirement is always applicable outside the Base Station RF bandwidth edges. The interfering signal offset is defined relative to the lower (upper) edge.

For a BS operating in non-contiguous spectrum, the ACS requirement applies in addition inside any sub-block gap, in case the sub-block gap size is at least as wide as the E-UTRA interfering signal in Table 7.5.1-3 and 7.5.1-4. The interfering signal offset is defined relative to the sub-block edges inside the sub-block gap.

For a BS operating in non-contiguous spectrum, the narrowband blocking requirement applies in addition inside any sub-block gap, in case the sub-block gap size is at least as wide as the channel bandwidth of the E-UTRA interfering signal in Table 7.5.1-2. The interfering signal offset is defined relative to the sub-block edges inside the sub-block gap.

Table 7.5.1-1: Narrowband blocking requirement

	Wanted signal mean power [dBm]	Interfering signal mean power [dBm]	Type of interfering signal
Wide Area BS	$P_{REFSENS}$ + 6dB*	-49	See Table 7.5.1-2
Medium Range BS	$P_{REFSENS}$ + 6dB****	-44	See Table 7.5.1-2
Local Area BS	$P_{REFSENS}$ + 6dB**	-41	See Table 7.5.1-2
Home BS	$P_{REFSENS}$ + 14dB***	-33	See Table 7.5.1-2
Note*: $P_{REFSENS}$ depends on the channel bandwidth as specified in Table 7.2.1-1. Note**: $P_{REFSENS}$ depends on the channel bandwidth as specified in Table 7.2.1-2 Note***: $P_{REFSENS}$ depends on the channel bandwidth as specified in Table 7.2.1-3. Note****: $P_{REFSENS}$ depends on the channel bandwidth as specified in Table 7.2.1-4.			

Table 7.5.1-2: Interfering signal for Narrowband blocking requirement

E-UTRA channel BW of the lowest (highest) carrier received [MHz]	Interfering RB centre frequency offset to the lower (upper) edge or sub-block edge inside a sub-block gap [kHz]	Type of interfering signal
1.4	±(252.5+m*180),	1.4 MHz E-UTRA signal, 1 RB*

ONEPLUS - EX. 1027

	m=0, 1, 2, 3, 4, 5	
3	±(247.5+m*180), m=0, 1, 2, 3, 4, 7, 10, 13	3 MHz E-UTRA signal, 1 RB*
5	±(342.5+m*180), m=0, 1, 2, 3, 4, 9, 14, 19, 24	5 MHz E-UTRA signal, 1 RB*
10	±(347.5+m*180), m=0, 1, 2, 3, 4, 9, 14, 19, 24	5 MHz E-UTRA signal, 1 RB*
15	±(352.5+m*180), m=0, 1, 2, 3, 4, 9, 14, 19, 24	5 MHz E-UTRA signal, 1 RB*
20	±(342.5+m*180), m=0, 1, 2, 3, 4, 9, 14, 19, 24	5 MHz E-UTRA signal, 1 RB*
Note*: Interfering signal consisting of one resource block is positioned at the stated offset, the channel bandwidth of the interfering signal is located adjacently to the lower (upper) edge.		

Table 7.5.1-3: Adjacent channel selectivity for Wide Area BS

E-UTRA channel bandwidth of the lowest (highest) carrier received [MHz]	Wanted signal mean power [dBm]	Interfering signal mean power [dBm]	Interfering signal centre frequency offset from the lower (upper) edge or sub-block edge inside a sub-block gap [MHz]	Type of interfering signal
1.4	$P_{REFSENS}$ + 11dB*	-52	±0.7025	1.4MHz E-UTRA signal
3	$P_{REFSENS}$ + 8dB*	-52	±1.5075	3MHz E-UTRA signal
5	$P_{REFSENS}$ + 6dB*	-52	±2.5025	5MHz E-UTRA signal
10	$P_{REFSENS}$ + 6dB*	-52	±2.5075	5MHz E-UTRA signal
15	$P_{REFSENS}$ + 6dB*	-52	±2.5125	5MHz E-UTRA signal
20	$P_{REFSENS}$ + 6dB*	-52	±2.5025	5MHz E-UTRA signal
Note*: $P_{REFSENS}$ depends on the channel bandwidth as specified in Table 7.2.1-1.				

Table 7.5.1-4: Adjacent channel selectivity for Local Area BS

E-UTRA channel bandwidth of the lowest (highest) carrier received [MHz]	Wanted signal mean power [dBm]	Interfering signal mean power [dBm]	Interfering signal centre frequency offset from the lower (upper) edge or sub-block edge inside a sub-block gap [MHz]	Type of interfering signal
1.4	$P_{REFSENS}$ + 11dB*	-44	±0.7025	1.4MHz E-UTRA signal
3	$P_{REFSENS}$ + 8dB*	-44	±1.5075	3MHz E-UTRA signal
5	$P_{REFSENS}$ + 6dB*	-44	±2.5025	5MHz E-UTRA signal
10	$P_{REFSENS}$ + 6dB*	-44	±2.5075	5MHz E-UTRA signal
15	$P_{REFSENS}$ + 6dB*	-44	±2.5125	5MHz E-UTRA signal
20	$P_{REFSENS}$ + 6dB*	-44	±2.5025	5MHz E-UTRA signal
Note*: $P_{REFSENS}$ depends on the channel bandwidth as specified in Table 7.2.1-2.				

ONEPLUS - EX. 1027

Table 7.5.1-5: Adjacent channel selectivity for Home BS

E-UTRA channel bandwidth [MHz]	Wanted signal mean power [dBm]	Interfering signal mean power [dBm]	Interfering signal centre frequency offset from the channel edge of the wanted signal [MHz]	Type of interfering signal
1.4	$P_{REFSENS}$ + 27dB*	-28	0.7025	1.4MHz E-UTRA signal
3	$P_{REFSENS}$ + 24dB*	-28	1.5075	3MHz E-UTRA signal
5	$P_{REFSENS}$ + 22dB*	-28	2.5025	5MHz E-UTRA signal
10	$P_{REFSENS}$ + 22dB*	-28	2.5075	5MHz E-UTRA signal
15	$P_{REFSENS}$ + 22dB*	-28	2.5125	5MHz E-UTRA signal
20	$P_{REFSENS}$ + 22dB*	-28	2.5025	5MHz E-UTRA signal
Note*: $P_{REFSENS}$ depends on the channel bandwidth as specified in Table 7.2.1-3.				

Table 7.5.1-6: Adjacent channel selectivity for Medium Range BS

E-UTRA channel bandwidth of the lowest (highest) carrier received [MHz]	Wanted signal mean power [dBm]	Interfering signal mean power [dBm]	Interfering signal centre frequency offset to the lower (upper) edge or sub-block edge inside a sub-block gap [MHz]	Type of interfering signal
1.4	$P_{REFSENS}$ + 11dB*	-47	0.7025	1.4MHz E-UTRA signal
3	$P_{REFSENS}$ + 8dB*	-47	1.5075	3MHz E-UTRA signal
5	$P_{REFSENS}$ + 6dB*	-47	2.5025	5MHz E-UTRA signal
10	$P_{REFSENS}$ + 6dB*	-47	2.5075	5MHz E-UTRA signal
15	$P_{REFSENS}$ + 6dB*	-47	2.5125	5MHz E-UTRA signal
20	$P_{REFSENS}$ + 6dB*	-47	2.5025	5MHz E-UTRA signal
Note*: $P_{REFSENS}$ depends on the channel bandwidth as specified in Table 7.2.1-4.				

7.6 Blocking

7.6.1 General blocking requirement

The blocking characteristics is a measure of the receiver ability to receive a wanted signal at its assigned channel in the presence of an unwanted interferer, which are either a 1.4MHz, 3MHz or 5MHz E-UTRA signal for in-band blocking or a CW signal for out-of-band blocking. The interfering signal shall be an E-UTRA signal as specified in Annex C.

ONEPLUS - EX. 1027

7.6.1.1 Minimum requirement

The throughput shall be ≥ 95% of the maximum throughput of the reference measurement channel, with a wanted and an interfering signal coupled to BS antenna input using the parameters in Tables 7.6.1.1-1, 7.6.1.1-1a, 7.6.1.1-1b, 7.6.1.1-1c and 7.6.1.1-2. The reference measurement channel for the wanted signal is identified in Table 7.2.1-1, 7.2.1-2, 7.2.1-3 and 7.2.1-4 for each channel bandwidth and further specified in Annex A.

The blocking requirement is always applicable outside the Base Station RF bandwidth edges. The interfering signal offset is defined relative to the lower (upper) edge.

For a BS operating in non-contiguous spectrum, the blocking requirement applies in addition inside any sub-block gap, in case the sub-block gap size is at least as wide as twice the interfering signal minimum offset in Table 7.6.1.1-2. The interfering signal offset is defined relative to the sub-block edges inside the sub-block gap.

Table 7.6.1.1-1: Blocking performance requirement for Wide Area BS

Operating Band	Centre Frequency of Interfering Signal [MHz]	Interfering Signal mean power [dBm]	Wanted Signal mean power [dBm]	Interfering signal centre frequency minimum frequency offset from the lower (upper) edge or sub-block edge inside a sub-block gap [MHz]	Type of Interfering Signal
1-7, 9-11, 13, 14, 18,19, 21-23, 24, 27, 33-44	(F_{UL_low} -20) to (F_{UL_high} +20)	-43	$P_{REFSENS}$ +6dB*	See table 7.6.1.1-2	See table 7.6.1.1-2
	1 to (F_{UL_low} -20) (F_{UL_high} +20) to 12750	-15	$P_{REFSENS}$ +6dB*	—	CW carrier
8, 26, 28	(F_{UL_low} -20) to (F_{UL_high} +10)	-43	$P_{REFSENS}$ +6dB*	See table 7.6.1.1-2	See table 7.6.1.1-2
	1 to (F_{UL_low} -20) (F_{UL_high} +10) to 12750	-15	$P_{REFSENS}$ +6dB*	—	CW carrier
12	(F_{UL_low} -20) to (F_{UL_high} +13)	-43	$P_{REFSENS}$ +6dB*	See table 7.6.1.1-2	See table 7.6.1.1-2
	1 to (F_{UL_low} -20) (F_{UL_high} +13) to 12750	-15	$P_{REFSENS}$ +6dB*	—	CW carrier
17	(F_{UL_low} -20) to (F_{UL_high} +18)	-43	$P_{REFSENS}$ +6dB*	See table 7.6.1.1-2	See table 7.6.1.1-2
	1 to (F_{UL_low} -20) (F_{UL_high} +18) to 12750	-15	$P_{REFSENS}$ +6dB*	—	CW carrier
20	(F_{UL_low} -11) to (F_{UL_high} +20)	-43	$P_{REFSENS}$ +6dB*	See table 7.6.1.1-2	See table 7.6.1.1-2
	1 to (F_{UL_low} -11) (F_{UL_high} +20) to 12750	-15	$P_{REFSENS}$ +6dB*	—	CW carrier
25	(F_{UL_low} -20) to (F_{UL_high} +15)	-43	$P_{REFSENS}$ +6dB*	See table 7.6.1.1-2	See table 7.6.1.1-2
	1 to (F_{UL_low} -20) (F_{UL_high} +15) to 12750	-15	$P_{REFSENS}$ +6dB*	—	CW carrier
Note*: $P_{REFSENS}$ depends on the channel bandwidth as specified in Table 7.2.1-1.					

NOTE: Table 7.6.1.1-1 assumes that two operating bands, where the downlink operating band (see Table 5.5-1) of one band would be within the in-band blocking region of the other band, are not deployed in the same geographical area.

ONEPLUS - EX. 1027

Table 7.6.1.1-1a: Blocking performance requirement for Local Area BS

Operating Band	Centre Frequency of Interfering Signal [MHz]	Interfering Signal mean power [dBm]	Wanted Signal mean power [dBm]	Interfering signal centre frequency minimum frequency offset from the lower (upper) edge or sub-block edge inside a sub-block gap [MHz]	Type of Interfering Signal
1-7, 9-11, 13-14, 18,19, 21-23, 24, 27, 33-44	(F_{UL_low} -20) to (F_{UL_high} +20)	-35	$P_{REFSENS}$ +6dB*	See table 7.6.1.1-2	See table 7.6.1.1-2
	1 to (F_{UL_low} -20) (F_{UL_high} +20) to 12750	-15	$P_{REFSENS}$ +6dB*	—	CW carrier
8, 26, 28	(F_{UL_low} -20) to (F_{UL_high} +10)	-35	$P_{REFSENS}$ +6dB*	See table 7.6.1.1-2	See table 7.6.1.1-2
	1 to (F_{UL_low} -20) (F_{UL_high} +10) to 12750	-15	$P_{REFSENS}$ +6dB*	—	CW carrier
12	(F_{UL_low} -20) to (F_{UL_high} +13)	-35	$P_{REFSENS}$ +6dB*	See table 7.6.1.1-2	See table 7.6.1.1-2
	1 to (F_{UL_low} -20) (F_{UL_high} +13) to 12750	-15	$P_{REFSENS}$ +6dB*	—	CW carrier
17	(F_{UL_low} -20) to (F_{UL_high} +18)	-35	$P_{REFSENS}$ +6dB*	See table 7.6.1. 1-2	See table 7.6.1.1-2
	1 to (F_{UL_low} -20) (F_{UL_high} +18) to 12750	-15	$P_{REFSENS}$ +6dB*	—	CW carrier
20	(F_{UL_low} -11) to (F_{UL_high} +20)	-35	$P_{REFSENS}$ +6dB*	See table 7.6.1. 1-2	See table 7.6.1.1-2
	1 to (F_{UL_low} -11) (F_{UL_high} +20) to 12750	-15	$P_{REFSENS}$ +6dB*	—	CW carrier
25	(F_{UL_low} -20) to (F_{UL_high} +15)	-35	$P_{REFSENS}$ +6dB*	See table 7.6.1. 1-2	See table 7.6.1.1-2
	1 to (F_{UL_low} -20) (F_{UL_high} +15) to 12750	-15	$P_{REFSENS}$ +6dB*	—	CW carrier
Note*: $P_{REFSENS}$ depends on the channel bandwidth as specified in Table 7.2.1-2					

NOTE: Table 7.6.1.1-1a assumes that two operating bands, where the downlink operating band (see Table 5.5-1) of one band would be within the in-band blocking region of the other band, are not deployed in the same geographical area.

ONEPLUS - EX. 1027

Table 7.6.1.1-1b: Blocking performance requirement for Home BS

Operating Band	Centre Frequency of Interfering Signal [MHz]	Interfering Signal mean power [dBm]	Wanted Signal mean power [dBm]	Interfering signal centre frequency minimum frequency offset from the channel edge of the wanted signal [MHz]	Type of Interfering Signal
1-7, 9-11, 13, 14, 18, 19, 21-23, 24, 27, 33-44	(F_{UL_low} -20) to (F_{UL_high} +20)	-27	$P_{REFSENS}$ +14dB*	See table 7.6.1.1-2	See table 7.6.1.1-2
	1 to (F_{UL_low} -20) (F_{UL_high} +20) to 12750	-15	$P_{REFSENS}$ +14dB*	—	CW carrier
8, 26, 28	(F_{UL_low} -20) to (F_{UL_high} +10)	-27	$P_{REFSENS}$ +14dB*	See table 7.6.1.1-2	See table 7.6.1.1-2
	1 to (F_{UL_low} -20) (F_{UL_high} +10) to 12750	-15	$P_{REFSENS}$ +14dB*	—	CW carrier
12	(F_{UL_low} -20) to (F_{UL_high} +13)	-27	$P_{REFSENS}$ +14dB*	See table 7.6.1.1-2	See table 7.6.1.1-2
	1 to (F_{UL_low} -20) (F_{UL_high} +13) to 12750	-15	$P_{REFSENS}$ +14dB*	—	CW carrier
17	(F_{UL_low} -20) to (F_{UL_high} +18)	-27	$P_{REFSENS}$ +14dB*	See table 7.6.1.1-2	See table 7.6.1.1-2
	1 to (F_{UL_low} -20) (F_{UL_high} +18) to 12750	-15	$P_{REFSENS}$ +14dB*	—	CW carrier
20	(F_{UL_low} -11) to (F_{UL_high} +20)	-27	$P_{REFSENS}$ +14dB*	See table 7.6.1.1-2	See table 7.6.1.1-2
	1 to (F_{UL_low} -11) (F_{UL_high} +20) to 12750	-15	$P_{REFSENS}$ +14dB*	—	CW carrier
25	(F_{UL_low} -20) to (F_{UL_high} +15)	-27	$P_{REFSENS}$ +14dB*	See table 7.6.1.1-2	See table 7.6.1.1-2
	1 to (F_{UL_low} -20) (F_{UL_high} +15) to 12750	-15	$P_{REFSENS}$ +14dB*	—	CW carrier
Note*: $P_{REFSENS}$ depends on the channel bandwidth as specified in Table 7.2.1-3.					

NOTE: Table 7.6.1.1-1b assumes that two operating bands, where the downlink operating band (see Table 5.5-1) of one band would be within the in-band blocking region of the other band, are not deployed in the same geographical area.

ONEPLUS - EX. 1027

Table 7.6.1.1-1c: Blocking performance requirement for Medium Range BS

Operating Band	Centre Frequency of Interfering Signal [MHz]	Interfering Signal mean power [dBm]	Wanted Signal mean power [dBm]	Interfering signal centre frequency minimum frequency offset to the lower (higher) edge or sub-block edge inside a sub-block gap [MHz]	Type of Interfering Signal
1-7, 9-11, 13, 14, 18,19, 21-23, 24, 27, 33-44	(F_{UL_low} -20) to (F_{UL_high} +20)	-38	$P_{REFSENS}$ +6dB*	See table 7.6.1.1-2	See table 7.6.1.1-2
	1 to (F_{UL_low} -20) (F_{UL_high} +20) to 12750	-15	$P_{REFSENS}$ +6dB*	—	CW carrier
8, 26, 28	(F_{UL_low} -20) to (F_{UL_high} +10)	-38	$P_{REFSENS}$ +6dB*	See table 7.6.1.1-2	See table 7.6.1.1-2
	1 to (F_{UL_low} -20) (F_{UL_high} +10) to 12750	-15	$P_{REFSENS}$ +6dB*	—	CW carrier
12	(F_{UL_low} -20) to (F_{UL_high} +13)	-38	$P_{REFSENS}$ +6dB*	See table 7.6.1.1-2	See table 7.6.1.1-2
	1 to (F_{UL_low} -20) (F_{UL_high} +13) to 12750	-15	$P_{REFSENS}$ +6dB*	—	CW carrier
17	(F_{UL_low} -20) to (F_{UL_high} +18)	-38	$P_{REFSENS}$ +6dB*	See table 7.6.1.1-2	See table 7.6.1.1-2
	1 to (F_{UL_low} -20) (F_{UL_high} +18) to 12750	-15	$P_{REFSENS}$ +6dB*	—	CW carrier
20	(F_{UL_low} -11) to (F_{UL_high} +20)	-38	$P_{REFSENS}$ +6dB*	See table 7.6.1.1-2	See table 7.6.1.1-2
	1 to (F_{UL_low} -11) (F_{UL_high} +20) to 12750	-15	$P_{REFSENS}$ +6dB*	—	CW carrier
25	(F_{UL_low} -20) to (F_{UL_high} +15)	-38	$P_{REFSENS}$ +6dB*	See table 7.6.1.1-2	See table 7.6.1.1-2
	1 to (F_{UL_low} -20) (F_{UL_high} +15) to 12750	-15	$P_{REFSENS}$ +6dB*	—	CW carrier
Note*: $P_{REFSENS}$ depends on the channel bandwidth as specified in Table 7.2.1-4.					

NOTE: Table 7.6.1.1-1c assumes that two operating bands, where the downlink operating band (see Table 5.5-1) of one band would be within the in-band blocking region of the other band, are not deployed in the same geographical area.

Table 7.6.1.1-2: Interfering signals for blocking performance requirement

E-UTRA channel BW of the lowest (highest) carrier received [MHz]	Interfering signal centre frequency minimum offset to the lower (upper) edge or sub-block edge inside a sub-block gap [MHz]	Type of interfering signal
1.4	±2.1	1.4MHz E-UTRA signal
3	±4.5	3MHz E-UTRA signal
5	±7.5	5MHz E-UTRA signal
10	±7.5	5MHz E-UTRA signal
15	±7.5	5MHz E-UTRA signal
20	±7.5	5MHz E-UTRA signal

ONEPLUS - EX. 1027

7.6.2 Co-location with other base stations

This additional blocking requirement may be applied for the protection of E-UTRA BS receivers when GSM, CDMA, UTRA or E-UTRA BS operating in a different frequency band are co-located with an E-UTRA BS. The requirement is applicable to all channel bandwidths supported by the E-UTRA BS.

The requirements in this clause assume a 30 dB coupling loss between interfering transmitter and E-UTRA BS receiver and are based on co-location with base stations of the same class.

ONEPLUS - EX. 1027

7.6.2.1 Minimum requirement

The throughput shall be ≥ 95% of the maximum throughput of the reference measurement channel, with a wanted and an interfering signal coupled to BS antenna input using the parameters in Table 7.6.2.1-1 for Wide Area BS, in Table 7.6.2.1-2 for Local Area BS and in Table 7.6.2.1-3 for Medium Range BS. The reference measurement channel for the wanted signal is identified in Tables 7.2.1-1, 7.2.1-2 and 7.2.1-4 for each channel bandwidth and further specified in Annex A.

Table 7.6.2.1-1: Blocking performance requirement for E-UTRA Wide Area BS when co-located with BS in other frequency bands.

Co-located BS type	Centre Frequency of Interfering Signal (MHz)	Interfering Signal mean power (dBm)	Wanted Signal mean power (dBm)	Type of Interfering Signal
Macro GSM850 or CDMA850	869 – 894	+16	$P_{REFSENS}$ + 6dB*	CW carrier
Macro GSM900	921 – 960	+16	$P_{REFSENS}$ + 6dB*	CW carrier
Macro DCS1800	1805 – 1880	+16	$P_{REFSENS}$ + 6dB*	CW carrier
Macro PCS1900	1930 – 1990	+16	$P_{REFSENS}$ + 6dB*	CW carrier
WA UTRA FDD Band I or E-UTRA Band 1	2110 – 2170	+16	$P_{REFSENS}$ + 6dB*	CW carrier
WA UTRA FDD Band II or E-UTRA Band 2	1930 – 1990	+16	$P_{REFSENS}$ + 6dB*	CW carrier
WA UTRA FDD Band III or E-UTRA Band 3	1805 – 1880	+16	$P_{REFSENS}$ + 6dB*	CW carrier
WA UTRA FDD Band IV or E-UTRA Band 4	2110 – 2155	+16	$P_{REFSENS}$ + 6dB*	CW carrier
WA UTRA FDD Band V or E-UTRA Band 5	869 – 894	+16	$P_{REFSENS}$ + 6dB*	CW carrier
WA UTRA FDD Band VI or E-UTRA Band 6	875 – 885	+16	$P_{REFSENS}$ + 6dB*	CW carrier
WA UTRA FDD Band VII or E-UTRA Band 7	2620 – 2690	+16	$P_{REFSENS}$ + 6dB*	CW carrier
WA UTRA FDD Band VIII or E-UTRA Band 8	925 – 960	+16	$P_{REFSENS}$ + 6dB*	CW carrier
WA UTRA FDD Band IX or E-UTRA Band 9	1844.9 – 1879.9	+16	$P_{REFSENS}$ + 6dB*	CW carrier
WA UTRA FDD Band X or E-UTRA Band 10	2110 – 2170	+16	$P_{REFSENS}$ + 6dB*	CW carrier
WA UTRA FDD Band XI or E-UTRA Band 11	1475.9 –1495.9	+16	$P_{REFSENS}$ + 6dB*	CW carrier
WA UTRA FDD Band XII or E-UTRA Band 12	729 - 746	+16	$P_{REFSENS}$ + 6dB*	CW carrier
WA UTRA FDD Band XIIII or E-UTRA Band 13	746 - 756	+16	$P_{REFSENS}$ + 6dB*	CW carrier
WA UTRA FDD Band XIV or E-UTRA Band 14	758 - 768	+16	$P_{REFSENS}$ + 6dB*	CW carrier
WA E-UTRA Band 17	734 - 746	+16	$P_{REFSENS}$ + 6dB*	CW carrier
WA E-UTRA Band 18	860 - 875	+16	$P_{REFSENS}$ + 6dB*	CW carrier
WA UTRA FDD Band XIX or E-UTRA Band 19	875 - 890	+16	$P_{REFSENS}$ + 6dB*	CW carrier
WA UTRA FDD Band XX or E-UTRA Band 20	791 - 821	+16	$P_{REFSENS}$ + 6dB*	CW carrier
WA UTRA FDD Band XXI or E-UTRA Band 21	1495.9 – 1510.9	+16	$P_{REFSENS}$ + 6dB*	CW carrier
WA UTRA FDD Band XXII or E-UTRA Band 22	3510 – 3590	+16	$P_{REFSENS}$ + 6dB*	CW carrier
WA E-UTRA Band 23	2180 - 2200	+16	$P_{REFSENS}$ + 6dB*	CW carrier
WA E-UTRA Band 24	1525 – 1559	+16	$P_{REFSENS}$ + 6dB*	CW carrier
WA UTRA FDD Band XXV or E-UTRA Band 25	1930 – 1995	+16	$P_{REFSENS}$ + 6dB*	CW carrier
WA UTRA FDD Band XXVI or E-UTRA Band 26	859 – 894	+16	$P_{REFSENS}$ + 6dB*	CW carrier
WA E-UTRA Band 27	852 - 869	+16	$P_{REFSENS}$ + 6dB*	CW carrier
WA E-UTRA Band 28	758 – 803	+16	$P_{REFSENS}$ + 6dB*	CW carrier

ONEPLUS - EX. 1027

WA E-UTRA Band 29	717-728	+16	$P_{REFSENS}$ + 6dB*	CW carrier
WA UTRA TDD Band a) or E-UTRA Band 33	1900-1920	+16	$P_{REFSENS}$ + 6dB*	CW carrier
WA UTRA TDD Band a) or E-UTRA TDD Band 34	2010-2025	+16	$P_{REFSENS}$ + 6dB*	CW carrier
WA UTRA TDD Band b) or E-UTRA Band 35	1850-1910	+16	$P_{REFSENS}$ + 6dB*	CW carrier
WA UTRA TDD Band b) or E-UTRA Band 36	1930-1990	+16	$P_{REFSENS}$ + 6dB*	CW carrier
WA UTRA TDD Band c) or E-UTRA Band 37	1910-1930	+16	$P_{REFSENS}$ + 6dB*	CW carrier
WA UTRA TDD Band d) or E-UTRA Band 38	2570-2620	+16	$P_{REFSENS}$ + 6dB*	CW carrier
WA UTRA TDD Band f) or E-UTRA Band 39	1880-1920	+16	$P_{REFSENS}$ + 6dB*	CW carrier
WA UTRA TDD Band e) or E-UTRA Band 40	2300-2400	+16	$P_{REFSENS}$ + 6dB*	CW carrier
WA E-UTRA Band 41	2496 - 2690	+16	$P_{REFSENS}$ + 6dB*	CW carrier
WA E-UTRA Band 42	3400-3600	+16	$P_{REFSENS}$ + 6dB*	CW carrier
WA E-UTRA Band 43	3600-3800	+16	$P_{REFSENS}$ + 6dB*	CW carrier
WA E-UTRA Band 44	703-803	+16	$P_{REFSENS}$ + 6dB*	CW carrier
Note*: $P_{REFSENS}$ depends on the channel bandwidth as specified in Table 7.2.1-1.				
NOTE 1: Except for a BS operating in Band 13, these requirements do not apply when the interfering signal falls within the uplink operating band or in the 10 MHz immediately outside the uplink operating band. For a BS operating in band 13 the requirements do not apply when the interfering signal falls within the frequency range 768-797 MHz. For BS operating in Band 42 or 43, the requirements do not apply when the interfering signal falls within the Band 42 or 43 uplink operating bands and the Base Stations are synchronized. NOTE 2: Some combinations of bands may not be possible to co-site based on the requirements above. The current state-of-the-art technology does not allow a single generic solution for co-location of UTRA TDD or E-UTRA TDD with E-UTRA FDD on adjacent frequencies for 30dB BS-BS minimum coupling loss. However, there are certain site-engineering solutions that can be used. These techniques are addressed in TR 25.942 [8].				

ONEPLUS - EX. 1027

Table 7.6.2.1-2: Blocking performance requirement for Local Area BS when co-located with BS in other frequency bands.

Co-located BS type	Centre Frequency of Interfering Signal (MHz)	Interfering Signal mean power (dBm)	Wanted Signal mean power (dBm)	Type of Interfering Signal
Pico GSM850	869 – 894	-7	$P_{REFSENS}$ + 6dB*	CW carrier
Pico GSM900	921 – 960	-7	$P_{REFSENS}$ + 6dB*	CW carrier
Pico DCS1800	1805 – 1880	-4	$P_{REFSENS}$ + 6dB*	CW carrier
Pico PCS1900	1930 – 1990	-4	$P_{REFSENS}$ + 6dB*	CW carrier
LA UTRA FDD Band I or E-UTRA Band 1	2110 – 2170	-6	$P_{REFSENS}$ + 6dB*	CW carrier
LA UTRA FDD Band II or E-UTRA Band 2	1930 – 1990	-6	$P_{REFSENS}$ + 6dB*	CW carrier
LA UTRA FDD Band III or E-UTRA Band 3	1805 – 1880	-6	$P_{REFSENS}$ + 6dB*	CW carrier
LA UTRA FDD Band IV or E-UTRA Band 4	2110 – 2155	-6	$P_{REFSENS}$ + 6dB*	CW carrier
LA UTRA FDD Band V or E-UTRA Band 5	869 – 894	-6	$P_{REFSENS}$ + 6dB*	CW carrier
LA UTRA FDD Band VI or E-UTRA Band 6	875 – 885	-6	$P_{REFSENS}$ + 6dB*	CW carrier
LA UTRA FDD Band VII or E-UTRA Band 7	2620 – 2690	-6	$P_{REFSENS}$ + 6dB*	CW carrier
LA UTRA FDD Band VIII or E-UTRA Band 8	925 – 960	-6	$P_{REFSENS}$ + 6dB*	CW carrier
LA UTRA FDD Band IX or E-UTRA Band 9	1844.9 – 1879.9	-6	$P_{REFSENS}$ + 6dB*	CW carrier
LA UTRA FDD Band X or E-UTRA Band 10	2110 – 2170	-6	$P_{REFSENS}$ + 6dB*	CW carrier
LA UTRA FDD Band XI or E-UTRA Band 11	1475.9 - 1495.9	-6	$P_{REFSENS}$ + 6dB*	CW carrier
LA UTRA FDD Band XII or E-UTRA Band 12	729 - 746	-6	$P_{REFSENS}$ + 6dB*	CW carrier
LA UTRA FDD Band XIIII or E-UTRA Band 13	746 - 756	-6	$P_{REFSENS}$ + 6dB*	CW carrier
LA UTRA FDD Band XIV or E-UTRA Band 14	758 - 768	-6	$P_{REFSENS}$ + 6dB*	CW carrier
LA E-UTRA Band 17	734 - 746	-6	$P_{REFSENS}$ + 6dB*	CW carrier
LA E-UTRA Band 18	860 - 875	-6	$P_{REFSENS}$ + 6dB*	CW carrier
LA UTRA FDD Band XIX or E-UTRA Band 19	875 - 890	-6	$P_{REFSENS}$ + 6dB*	CW carrier
LA UTRA FDD Band XX or E-UTRA Band 20	791 - 821	-6	$P_{REFSENS}$ + 6dB*	CW carrier
LA UTRA FDD Band XXI or E-UTRA Band 21	1495.9 – 1510.9	-6	$P_{REFSENS}$ + 6dB*	CW carrier
LA UTRA FDD Band XXII or E-UTRA Band 22	3510 – 3590	-6	$P_{REFSENS}$ + 6dB*	CW carrier
LA E-UTRA Band 23	2180-2200	-6	$P_{REFSENS}$ + 6dB*	CW carrier
LA E-UTRA Band 24	1525 – 1559	-6	$P_{REFSENS}$ + 6dB*	CW carrier
LA UTRA FDD Band XXV or E-UTRA Band 25	1930 – 1995	-6	$P_{REFSENS}$ + 6dB*	CW carrier
LA UTRA FDD Band XXVI or E-UTRA Band 26	859 – 894	-6	$P_{REFSENS}$ + 6dB*	CW carrier
LA E-UTRA Band 27	852 - 869	-6	$P_{REFSENS}$ + 6dB*	CW carrier
LA E-UTRA Band 28	758 – 803	-6	$P_{REFSENS}$ + 6dB*	CW carrier
LA E-UTRA Band 29	717-728	-6	$P_{REFSENS}$ + 6dB*	CW carrier
LA UTRA TDD Band a) or E-UTRA Band 33	1900-1920	-6	$P_{REFSENS}$ + 6dB*	CW carrier
LA UTRA TDD Band a) or E-UTRA Band 34	2010-2025	-6	$P_{REFSENS}$ + 6dB*	CW carrier
LA UTRA TDD Band b) or E-UTRA Band 35	1850-1910	-6	$P_{REFSENS}$ + 6dB*	CW carrier
LA UTRA TDD Band b) or E-UTRA Band 36	1930-1990	-6	$P_{REFSENS}$ + 6dB*	CW carrier
LA UTRA TDD Band c) or	1910-1930	-6	$P_{REFSENS}$ + 6dB*	CW carrier

ONEPLUS - EX. 1027

E-UTRA Band 37				
LA UTRA TDD Band d) or E-UTRA Band 38	2570-2620	-6	$P_{REFSENS}$ + 6dB*	CW carrier
LA UTRA TDD Band f) or E-UTRA Band 39	1880-1920	-6	$P_{REFSENS}$ + 6dB*	CW carrier
LA E-UTRA UTRA TDD Band e) or Band 40	2300-2400	-6	$P_{REFSENS}$ + 6dB*	CW carrier
LA E-UTRA Band 41	2496 - 2690	-6	$P_{REFSENS}$ + 6dB*	CW carrier
LA E-UTRA Band 42	3400-3600	-6	$P_{REFSENS}$ + 6dB*	CW carrier
LA E-UTRA Band 43	3600-3800	-6	$P_{REFSENS}$ + 6dB*	CW carrier
LA E-UTRA Band 44	703-803	-6	$P_{REFSENS}$ + 6dB*	CW carrier
Note*: $P_{REFSENS}$ depends on the channel bandwidth as specified in Table 7.2.1-2.				

NOTE 1: Except for a BS operating in Band 13, these requirements do not apply when the interfering signal falls within the uplink operating band or in the 10 MHz immediately outside the uplink operating band.
For a BS operating in band 13 the requirements do not apply when the interfering signal falls within the frequency range 768-797 MHz.
For BS operating in Band 42 or 43, the requirements do not apply when the interfering signal falls within the Band 42 or 43 uplink operating bands and the Base Stations are synchronized.

NOTE 2: Some combinations of bands may not be possible to co-site based on the requirements above. The current state-of-the-art technology does not allow a single generic solution for co-location of UTRA TDD or E-UTRA TDD with E-UTRA FDD on adjacent frequencies for 30dB BS-BS minimum coupling loss. However, there are certain site-engineering solutions that can be used. These techniques are addressed in TR 25.942 [8].

ONEPLUS - EX. 1027

Table 7.6.2.1-3: Blocking performance requirement for E-UTRA Medium Range BS when co-located with BS in other frequency bands.

Co-located BS type	Centre Frequency of Interfering Signal (MHz)	Interfering Signal mean power (dBm)	Wanted Signal mean power (dBm)	Type of Interfering Signal
Micro/MR GSM850	869 – 894	+8	$P_{REFSENS}$ + 6dB*	CW carrier
Micro/MR GSM900	921 – 960	+8	$P_{REFSENS}$ + 6dB*	CW carrier
Micro/MR DCS1800	1805 – 1880	+8	$P_{REFSENS}$ + 6dB*	CW carrier
Micro/MR PCS1900	1930 – 1990	+8	$P_{REFSENS}$ + 6dB*	CW carrier
MR UTRA FDD Band I or E-UTRA Band 1	2110 – 2170	+8	$P_{REFSENS}$ + 6dB*	CW carrier
MR UTRA FDD Band II or E-UTRA Band 2	1930 – 1990	+8	$P_{REFSENS}$ + 6dB*	CW carrier
MR UTRA FDD Band III or E-UTRA Band 3	1805 – 1880	+8	$P_{REFSENS}$ + 6dB*	CW carrier
MR UTRA FDD Band IV or E-UTRA Band 4	2110 – 2155	+8	$P_{REFSENS}$ + 6dB*	CW carrier
MR UTRA FDD Band V or E-UTRA Band 5	869 – 894	+8	$P_{REFSENS}$ + 6dB*	CW carrier
MR UTRA FDD Band VI or E-UTRA Band 6	875 – 885	+8	$P_{REFSENS}$ + 6dB*	CW carrier
MR UTRA FDD Band VII or E-UTRA Band 7	2620 – 2690	+8	$P_{REFSENS}$ + 6dB*	CW carrier
MR UTRA FDD Band VIII or E-UTRA Band 8	925 – 960	+8	$P_{REFSENS}$ + 6dB*	CW carrier
MR UTRA FDD Band IX or E-UTRA Band 9	1844.9 – 1879.9	+8	$P_{REFSENS}$ + 6dB*	CW carrier
MR UTRA FDD Band X or E-UTRA Band 10	2110 – 2170	+8	$P_{REFSENS}$ + 6dB*	CW carrier
MR UTRA FDD Band XI or E-UTRA Band 11	1475.9 –1495.9	+8	$P_{REFSENS}$ + 6dB*	CW carrier
MR UTRA FDD Band XII or E-UTRA Band 12	729 – 746	+8	$P_{REFSENS}$ + 6dB*	CW carrier
MR UTRA FDD Band XIIII or E-UTRA Band 13	746 – 756	+8	$P_{REFSENS}$ + 6dB*	CW carrier
MR UTRA FDD Band XIV or E-UTRA Band 14	758 – 768	+8	$P_{REFSENS}$ + 6dB*	CW carrier
MR E-UTRA Band 17	734 – 746	+8	$P_{REFSENS}$ + 6dB*	CW carrier
MR E-UTRA Band 18	860 – 875	+8	$P_{REFSENS}$ + 6dB*	CW carrier
MR UTRA FDD Band XIX or E-UTRA Band 19	875 – 890	+8	$P_{REFSENS}$ + 6dB*	CW carrier
MR UTRA FDD Band XX or E-UTRA Band 20	791 – 821	+8	$P_{REFSENS}$ + 6dB*	CW carrier
MR UTRA FDD Band XXI or E-UTRA Band 21	1495.9 – 1510.9	+8	$P_{REFSENS}$ + 6dB*	CW carrier
MR UTRA FDD Band XXII or E-UTRA Band 22	3510 – 3590	+8	$P_{REFSENS}$ + 6dB*	CW carrier
MR E-UTRA Band 23	2180 – 2200	+8	$P_{REFSENS}$ + 6dB*	CW carrier
MR E-UTRA Band 24	1525 – 1559	+8	$P_{REFSENS}$ + 6dB*	CW carrier
MR UTRA FDD Band XXV or E-UTRA Band 25	1930 – 1995	+8	$P_{REFSENS}$ + 6dB*	CW carrier
MR UTRA FDD Band XXVI or E-UTRA Band 26	859 – 894	+8	$P_{REFSENS}$ + 6dB*	CW carrier
MR E-UTRA Band 27	852 – 869	+8	$P_{REFSENS}$ + 6dB*	CW carrier
MR E-UTRA Band 28	758 – 803	+8	$P_{REFSENS}$ + 6dB*	CW carrier
MR E-UTRA Band 29	717 – 728	+8	$P_{REFSENS}$ + 6dB*	CW carrier
MR UTRA TDD Band a) or E-UTRA Band 33	1900 – 1920	+8	$P_{REFSENS}$ + 6dB*	CW carrier
MR UTRA TDD Band a) or E-UTRA TDD Band 34	2010 – 2025	+8	$P_{REFSENS}$ + 6dB*	CW carrier
MR UTRA TDD Band b) or E-UTRA Band 35	1850 – 1910	+8	$P_{REFSENS}$ + 6dB*	CW carrier
MR UTRA TDD Band b) or E-UTRA Band 36	1930 – 1990	+8	$P_{REFSENS}$ + 6dB*	CW carrier
MR UTRA TDD Band c) or	1910 – 1930	+8	$P_{REFSENS}$ + 6dB*	CW carrier

ONEPLUS - EX. 1027

E-UTRA Band 37				
MR UTRA TDD Band d) or E-UTRA Band 38	2570 – 2620	+8	$P_{REFSENS}$ + 6dB*	CW carrier
MR UTRA TDD Band f) or E-UTRA Band 39	1880 – 1920	+8	$P_{REFSENS}$ + 6dB*	CW carrier
MR UTRA TDD Band e) or E-UTRA Band 40	2300 – 2400	+8	$P_{REFSENS}$ + 6dB*	CW carrier
MR E-UTRA Band 41	2496 – 2690	+8	$P_{REFSENS}$ + 6dB*	CW carrier
MR E-UTRA Band 42	3400 – 3600	+8	$P_{REFSENS}$ + 6dB*	CW carrier
MR E-UTRA Band 43	3600 – 3800	+8	$P_{REFSENS}$ + 6dB*	CW carrier
MR E-UTRA Band 44	703 – 803	+8	$P_{REFSENS}$ + 6dB*	CW carrier
Note*: $P_{REFSENS}$ depends on the channel bandwidth as specified in Table 7.2.1-4.				
NOTE 1: Except for a BS operating in Band 13, these requirements do not apply when the interfering signal falls within the uplink operating band or in the 10 MHz immediately outside the uplink operating band. For a BS operating in band 13 the requirements do not apply when the interfering signal falls within the frequency range 768-797 MHz. For BS operating in Band 42 or 43, the requirements do not apply when the interfering signal falls within the Band 42 or 43 uplink operating bands and the Base Stations are synchronized. NOTE 2: Some combinations of bands may not be possible to co-site based on the requirements above. The current state-of-the-art technology does not allow a single generic solution for co-location of UTRA TDD or E-UTRA TDD with E-UTRA FDD on adjacent frequencies for 30dB BS-BS minimum coupling loss. However, there are certain site-engineering solutions that can be used. These techniques are addressed in TR 25.942 [8].				

7.7 Receiver spurious emissions

The spurious emissions power is the power of emissions generated or amplified in a receiver that appear at the BS receiver antenna connector. The requirements apply to all BS with separate RX and TX antenna ports. In this case for FDD BS the test shall be performed when both TX and RX are on, with the TX port terminated.

For TDD BS with common RX and TX antenna port the requirement applies during the Transmitter OFF period. For FDD BS with common RX and TX antenna port the transmitter spurious emission as specified in clause 6.6.4 is valid.

7.7.1 Minimum requirement

The power of any spurious emission shall not exceed the levels in Table 7.7.1-1:

Table 7.7.1-1: General spurious emission minimum requirement

Frequency range	Maximum level	Measurement Bandwidth	Note
30MHz - 1 GHz	-57 dBm	100 kHz	
1 GHz – 12.75 GHz	-47 dBm	1 MHz	
12.75 GHz - 5th harmonic of the upper frequency edge of the UL operating band in GHz	-47 dBm	1 MHz	Applies only for Bands 22, 42 and 43.
NOTE: The frequency range between 2.5 * $BW_{Channel}$ below the first carrier frequency and 2.5 * $BW_{Channel}$ above the last carrier frequency transmitted by the BS, where $BW_{Channel}$ is the channel bandwidth according to Table 5.6-1, may be excluded from the requirement. However, frequencies that are more than 10 MHz below the lowest frequency of the BS downlink operating band or more than 10 MHz above the highest frequency of the BS downlink operating band shall not be excluded from the requirement.			

In addition to the requirements in Table 7.7.1-1, the power of any spurious emission shall not exceed the levels specified for Protection of the E-UTRA FDD BS receiver of own or different BS in subclause 6.6.4.2 and for Co-existence with other systems in the same geographical area in subclause 6.6.4.3. In addition, the co-existence requirements for co-located base stations specified in subclause 6.6.4.4 may also be applied.

ONEPLUS - EX. 1027

7.8 Receiver intermodulation

Third and higher order mixing of the two interfering RF signals can produce an interfering signal in the band of the desired channel. Intermodulation response rejection is a measure of the capability of the receiver to receive a wanted signal on its assigned channel frequency in the presence of two interfering signals which have a specific frequency relationship to the wanted signal. Interfering signals shall be a CW signal and an E-UTRA signal as specified in Annex C.

7.8.1 Minimum requirement

The throughput shall be ≥ 95% of the maximum throughput of the reference measurement channel, with a wanted signal at the assigned channel frequency and two interfering signals coupled to the BS antenna input, with the conditions specified in Tables 7.8.1-1 and 7.8.1-2 for intermodulation performance and in Tables 7.8.1-3, 7.8.1-4, 7.8.1-5 and 7.8.1-6 for narrowband intermodulation performance. The reference measurement channel for the wanted signal is identified in Table 7.2.1-1, Table 7.2.1-2, Table 7.2.1-3 and Table 7.2.1-4 for each channel bandwidth and further specified in Annex A.

The receiver intermodulation requirement is always applicable outside the Base Station RF bandwidth edges. The interfering signal offset is defined relative to the lower (upper) edge.

For a BS operating in non-contiguous spectrum, the narrowband intermodulation requirement applies in addition inside any sub-block gap in case the sub-block gap is at least as wide as the channel bandwidth of the E-UTRA interfering signal in Table 7.8.1-3. The interfering signal offset is defined relative to the sub-block edges inside the sub-block gap.

Table 7.8.1-1: Intermodulation performance requirement

BS type	Wanted signal mean power [dBm]	Interfering signal mean power [dBm]	Type of interfering signal
Wide Area BS	$P_{REFSENS}$ + 6dB*	-52	See Table 7.8.1-2
Medium Range BS	$P_{REFSENS}$ + 6dB**	-47	
Local Area BS	$P_{REFSENS}$ + 6dB***	-44	
Home BS	$P_{REFSENS}$ + 14dB****	-36	
Note*: $P_{REFSENS}$ depends on the channel bandwidth as specified in Table 7.2.1-1. Note**: $P_{REFSENS}$ depends on the channel bandwidth as specified in Table 7.2.1-4. Note*** $P_{REFSENS}$ depends on the channel bandwidth as specified in Table 7.2.1-2. Note**** $P_{REFSENS}$ depends on the channel bandwidth as specified in Table 7.2.1-3.			

Table 7.8.1-2: Interfering signal for Intermodulation performance requirement

E-UTRA channel bandwidth of the lowest (highest) carrier received [MHz]	Interfering signal centre frequency offset from the lower (upper) edge [MHz]	Type of interfering signal
1.4	±2.1	CW
	±4.9	1.4MHz E-UTRA signal
3	±4.5	CW
	±10.5	3MHz E-UTRA signal
5	±7.5	CW
	±17.5	5MHz E-UTRA signal
10	±7.375	CW
	±17.5	5MHz E-UTRA signal
15	±7.25	CW
	±17.5	5MHz E-UTRA signal
20	±7.125	CW
	±17.5	5MHz E-UTRA signal

ONEPLUS - EX. 1027

Table 7.8.1-3: Narrowband intermodulation performance requirement for Wide Area BS

E-UTRA channel bandwidth of the lowest (highest) carrier received [MHz]	Wanted signal mean power [dBm]	Interfering signal mean power [dBm]	Interfering RB centre frequency offset from the lower (upper) edge or sub-block edge inside a sub-block gap [kHz]	Type of interfering signal
1.4	$P_{REFSENS}$ + 6dB*	-52	±270	CW
		-52	±790	1.4 MHz E-UTRA signal, 1 RB**
3	$P_{REFSENS}$ + 6dB*	-52	±270	CW
		-52	±780	3.0 MHz E-UTRA signal, 1 RB**
5	$P_{REFSENS}$ + 6dB*	-52	±360	CW
		-52	±1060	5 MHz E-UTRA signal, 1 RB**
10	$P_{REFSENS}$ + 6dB* (***)	-52	±325	CW
		-52	±1240	5 MHz E-UTRA signal, 1 RB**
15	$P_{REFSENS}$ + 6dB* (***)	-52	±380	CW
		-52	±1600	5MHz E-UTRA signal, 1 RB**
20	$P_{REFSENS}$ + 6dB* (***)	-52	±345	CW
		-52	±1780	5MHz E-UTRA signal, 1 RB**

Note*: $P_{REFSENS}$ is related to the channel bandwidth as specified in Table 7.2.1-1.
Note**: Interfering signal consisting of one resource block positioned at the stated offset, the channel bandwidth of the interfering signal is located adjacently to the lower (upper) edge.
Note***: This requirement shall apply only for a FRC A1-3 mapped to the frequency range at the channel edge adjacent to the interfering signals

ONEPLUS - EX. 1027

Table 7.8.1-4: Narrowband intermodulation performance requirement for Local Area BS

E-UTRA channel bandwidth of the lowest (highest) carrier received [MHz]	Wanted signal mean power [dBm]	Interfering signal mean power [dBm]	Interfering RB centre frequency offset from the lower (upper) edge or sub-block edge inside a sub-block [kHz]	Type of interfering signal
1.4	$P_{REFSENS}$ + 6dB*	-44	±270	CW
		-44	±790	1.4 MHz E-UTRA signal, 1 RB**
3	$P_{REFSENS}$ + 6dB*	-44	±270	CW
		-44	±780	3.0 MHz E-UTRA signal, 1 RB**
5	$P_{REFSENS}$ + 6dB*	-44	±360	CW
		-44	±1060	5 MHz E-UTRA signal, 1 RB**
10	$P_{REFSENS}$ + 6dB* (***)	-44	±325	CW
		-44	±1240	5 MHz E-UTRA signal, 1 RB**
15	$P_{REFSENS}$ + 6dB* (***)	-44	±380	CW
		-44	±1600	5MHz E-UTRA signal, 1 RB**
20	$P_{REFSENS}$ + 6dB* (***)	-44	±345	CW
		-44	±1780	5MHz E-UTRA signal, 1 RB**

Note*: $P_{REFSENS}$ is related to the channel bandwidth as specified in Table 7.2.1-2.
Note**: Interfering signal consisting of one resource block positioned at the stated offset, the channel bandwidth of the interfering signal is located adjacently to the lower (upper) edge.
Note***: This requirement shall apply only for a FRC A1-3 mapped to the frequency range at the channel edge adjacent to the interfering signals

Table 7.8.1-5: Narrowband intermodulation performance requirement for Home BS

E-UTRA channel bandwidth [MHz]	Wanted signal mean power [dBm]	Interfering signal mean power [dBm]	Interfering RB centre frequency offset from the channel edge of the wanted signal [kHz]	Type of interfering signal
1.4	$P_{REFSENS}$ + 14dB*	-36	270	CW
		-36	790	1.4 MHz E-UTRA signal, 1 RB**
3	$P_{REFSENS}$ + 14dB*	-36	270	CW
		-36	780	3.0 MHz E-UTRA signal, 1 RB**
5	$P_{REFSENS}$ + 14dB*	-36	360	CW
		-36	1060	5 MHz E-UTRA signal, 1 RB**
10	$P_{REFSENS}$ + 14dB* (***)	-36	325	CW
		-36	1240	5 MHz E-UTRA signal, 1 RB**
15	$P_{REFSENS}$ + 14dB* (***)	-36	380	CW
		-36	1600	5MHz E-UTRA signal, 1 RB**
20	$P_{REFSENS}$ + 14dB* (***)	-36	345	CW
		-36	1780	5MHz E-UTRA signal, 1 RB**

Note*: $P_{REFSENS}$ is related to the channel bandwidth as specified in Table 7.2.1-3.
Note**: Interfering signal consisting of one resource block positioned at the stated offset, the channel bandwidth of the interfering signal is located adjacently to the channel bandwidth of the wanted signal.
Note***: This requirement shall apply only for a FRC A1-3 mapped to the frequency range at the channel edge adjacent to the interfering signals.

ONEPLUS - EX. 1027

Table 7.8.1-6: Narrowband intermodulation performance requirement for Medimum Range BS

E-UTRA channel bandwidth of the lowest (highest) carrier received [MHz]	Wanted signal mean power [dBm]	Interfering signal mean power [dBm]	Interfering RB centre frequency offset to the lower (higher) edge or sub-block edge inside a sub-block gap [kHz]	Type of interfering signal
1.4	$P_{REFSENS}$ + 6dB*	−47	±270	CW
		−47	±790	1.4 MHz E-UTRA signal, 1 RB**
3	$P_{REFSENS}$ + 6dB*	−47	±270	CW
		−47	±780	3.0 MHz E-UTRA signal, 1 RB**
5	$P_{REFSENS}$ + 6dB*	−47	±360	CW
		−47	±1060	5 MHz E-UTRA signal, 1 RB**
10	$P_{REFSENS}$ + 6dB* (***)	−47	±325	CW
		−47	±1240	5 MHz E-UTRA signal, 1 RB**
15	$P_{REFSENS}$ + 6dB* (***)	−47	±380	CW
		−47	±1600	5MHz E-UTRA signal, 1 RB**
20	$P_{REFSENS}$ + 6dB* (***)	−47	±345	CW
		−47	±1780	5MHz E-UTRA signal, 1 RB**

Note*: $P_{REFSENS}$ is related to the channel bandwidth as specified in Table 7.2.1-4.
Note**: Interfering signal consisting of one resource block positioned at the stated offset, the channel bandwidth of the interfering signal is located adjacently to the lower (upper) edge.
Note***: This requirement shall apply only for a FRC A1-3 mapped to the frequency range at the channel edge adjacent to the interfering signals

8 Performance requirement

8.1 General

Performance requirements for the BS are specified for the fixed reference channels defined in Annex A and the propagation conditions in Annex B. The requirements only apply to those FRCs that are supported by the base station.

Unless stated otherwise, performance requirements apply for a single carrier only. Performance requirements for a BS supporting carrier aggregation are defined in terms of single carrier requirements. For FDD operation the requirements in clause 8 shall be met with the transmitter on.

NOTE: In normal operating conditions the BS in FDD operation is configured to transmit and receive at the same time. The transmitter may be off for some of the tests as specifed in 36.141 [4].

The SNR used in this clause is specified based on a single carrier and defined as:

$$SNR = S / N$$

Where:

S is the total signal energy in the subframe on a single antenna port.

N is the noise energy in a bandwidth corresponding to the transmission bandwidth over the duration of a subframe.

ONEPLUS - EX. 1027

8.2 Performance requirements for PUSCH

8.2.1 Requirements in multipath fading propagation conditions

The performance requirement of PUSCH is determined by a minimum required throughput for a given SNR. The required throughput is expressed as a fraction of maximum throughput for the FRCs listed in Annex A. The performance requirements assume HARQ retransmissions.

Table 8.2.1-1 Test parameters for testing PUSCH

Parameter	Value
Maximum number of HARQ transmissions	4
RV sequence	0, 2, 3, 1, 0, 2, 3, 1
Uplink-downlink allocation for TDD	Configuration 1 (2:2)

8.2.1.1 Minimum requirements

The throughput shall be equal to or larger than the fraction of maximum throughput stated in the tables 8.2.1.1-1 to 8.2.1.1-6 at the given SNR for 1Tx and in tables 8.2.1.1-7 to 8.2.1.1-12 for 2Tx two layer spatial multiplexing transmission.

ONEPLUS - EX. 1027

Table 8.2.1.1-1 Minimum requirements for PUSCH, 1.4 MHz Channel Bandwidth, 1Tx

Number of TX antennas	Number of RX antennas	Cyclic prefix	Propagation conditions and correlation matrix (Annex B)	FRC (Annex A)	Fraction of maximum throughput	SNR [dB]
1	2	Normal	EPA 5Hz Low	A3-2	30%	-4.1
					70%	0.1
				A4-3	70%	10.6
				A5-2	70%	17.7
			EVA 5Hz Low	A3-1	30%	-2.7
					70%	1.8
				A4-1	30%	4.4
					70%	11.3
				A5-1	70%	18.6
			EVA 70Hz Low	A3-2	30%	-3.9
					70%	0.7
				A4-3	30%	4.0
					70%	11.9
			ETU 70Hz* Low	A3-1	30%	-2.4
					70%	2.4
			ETU 300Hz* Low	A3-1	30%	-2.2
					70%	2.9
		Extended	ETU 70Hz* Low	A4-2	30%	4.8
					70%	13.5
	4	Normal	EPA 5Hz Low	A3-2	30%	-6.6
					70%	-3.1
				A4-3	70%	7.1
				A5-2	70%	14.4
			EVA 5Hz Low	A3-1	30%	-5.0
					70%	-1.3
				A4-1	30%	1.3
					70%	7.8
				A5-1	70%	15.4
			EVA 70Hz Low	A3-2	30%	-6.3
					70%	-2.7
				A4-3	30%	0.8
					70%	8.3
			ETU 70Hz* Low	A3-1	30%	-4.8
					70%	-1.0
			ETU 300Hz* Low	A3-1	30%	-4.6
					70%	-0.6
		Extended	ETU 70Hz* Low	A4-2	30%	1.6
					70%	9.9
Note*: Not applicable for Local Area BS and Home BS.						

ONEPLUS - EX. 1027

Table 8.2.1.1-2 Minimum requirements for PUSCH, 3 MHz Channel Bandwidth, 1Tx

Number of TX antennas	Number of RX antennas	Cyclic prefix	Propagation conditions and correlation matrix (Annex B)	FRC (Annex A)	Fraction of maximum throughput	SNR [dB]
1	2	Normal	EPA 5Hz Low	A3-3	30%	-4.1
					70%	0.1
				A4-4	70%	10.9
				A5-3	70%	18.1
			EVA 5Hz Low	A3-1	30%	-2.8
					70%	1.8
				A4-1	30%	4.3
					70%	11.5
				A5-1	70%	18.8
			EVA 70Hz Low	A3-3	30%	-4.0
					70%	0.6
				A4-4	30%	4.7
					70%	12.5
			ETU 70Hz* Low	A3-1	30%	-2.5
					70%	2.4
			ETU 300Hz* Low	A3-1	30%	-2.2
					70%	2.9
		Extended	ETU 70Hz* Low	A4-2	30%	4.7
					70%	13.5
	4	Normal	EPA 5Hz Low	A3-3	30%	-6.8
					70%	-3.4
				A4-4	70%	7.7
				A5-3	70%	14.4
			EVA 5Hz Low	A3-1	30%	-5.0
					70%	-1.3
				A4-1	30%	1.2
					70%	7.8
				A5-1	70%	15.4
			EVA 70Hz Low	A3-3	30%	-6.5
					70%	-2.9
				A4-4	30%	1.6
					70%	8.7
			ETU 70Hz* Low	A3-1	30%	-4.8
					70%	-0.9
			ETU 300Hz* Low	A3-1	30%	-4.6
					70%	-0.6
		Extended	ETU 70Hz* Low	A4-2	30%	1.5
					70%	9.9
Note*: Not applicable for Local Area BS and Home BS.						

ONEPLUS - EX. 1027

Table 8.2.1.1-3 Minimum requirements for PUSCH, 5 MHz Channel Bandwidth, 1Tx

Number of TX antennas	Number of RX antennas	Cyclic prefix	Propagation conditions a and correlation matrix (Annex B)	FRC (Annex A)	Fraction of maximum throughput	SNR [dB]
1	2	Normal	EPA 5Hz Low	A3-4	30%	-4.7
					70%	-0.7
				A4-5	70%	10.4
				A5-4	70%	18.0
			EVA 5Hz Low	A3-1	30%	-2.7
					70%	1.8
				A4-1	30%	4.3
					70%	11.5
				A5-1	70%	18.6
			EVA 70Hz Low	A3-4	30%	-4.5
					70%	-0.1
				A4-5	30%	4.3
					70%	12.3
			ETU 70Hz* Low	A3-1	30%	-2.5
					70%	2.4
			ETU 300Hz* Low	A3-1	30%	-2.2
					70%	2.9
		Extended	ETU 70Hz* Low	A4-2	30%	4.8
					70%	13.5
	4	Normal	EPA 5Hz Low	A3-4	30%	-7.1
					70%	-3.8
				A4-5	70%	7.6
				A5-4	70%	14.4
			EVA 5Hz Low	A3-1	30%	-5.1
					70%	-1.4
				A4-1	30%	1.2
					70%	7.9
				A5-1	70%	15.5
			EVA 70Hz Low	A3-4	30%	-6.9
					70%	-3.3
				A4-5	30%	1.2
					70%	8.3
			ETU 70Hz* Low	A3-1	30%	-4.8
					70%	-0.9
			ETU 300Hz* Low	A3-1	30%	-4.6
					70%	-0.6
		Extended	ETU 70Hz* Low	A4-2	30%	1.6
					70%	9.9
Note*: Not applicable for Local Area BS and Home BS.						

ONEPLUS - EX. 1027

Table 8.2.1.1-4 Minimum requirements for PUSCH, 10 MHz Channel Bandwidth, 1Tx

Number of TX antennas	Number of RX antennas	Cyclic prefix	Propagation conditions and correlation matrix (Annex B)	FRC (Annex A)	Fraction of maximum throughput	SNR [dB]
1	2	Normal	EPA 5Hz Low	A3-5	30%	-4.2
					70%	-0.4
				A4-6	70%	10.8
				A5-5	70%	18.3
			EVA 5Hz Low	A3-1	30%	-2.7
					70%	1.9
				A4-1	30%	4.3
					70%	11.4
				A5-1	70%	18.8
			EVA 70Hz Low	A3-5	30%	-4.1
					70%	0.1
				A4-6	30%	4.5
					70%	12.6
			ETU 70Hz* Low	A3-1	30%	-2.5
					70%	2.4
			ETU 300Hz* Low	A3-1	30%	-2.2
					70%	2.9
		Extended	ETU 70Hz* Low	A4-2	30%	4.8
					70%	13.6
	4	Normal	EPA 5Hz Low	A3-5	30%	-6.8
					70%	-3.5
				A4-6	70%	7.5
				A5-5	70%	14.7
			EVA 5Hz Low	A3-1	30%	-5.0
					70%	-1.2
				A4-1	30%	1.2
					70%	7.9
				A5-1	70%	15.5
			EVA 70Hz Low	A3-5	30%	-6.7
					70%	-2.9
				A4-6	30%	0.7
					70%	8.0
			ETU 70Hz* Low	A3-1	30%	-4.8
					70%	-0.9
			ETU 300Hz* Low	A3-1	30%	-4.6
					70%	-0.6
		Extended	ETU 70Hz* Low	A4-2	30%	1.7
					70%	10.3
Note*: Not applicable for Local Area BS and Home BS.						

ONEPLUS - EX. 1027

Table 8.2.1.1-5 Minimum requirements for PUSCH, 15 MHz Channel Bandwidth, 1Tx

Number of TX antennas	Number of RX antennas	Cyclic prefix	Propagation conditions and correlation matrix (Annex B)	FRC (Annex A)	Fraction of maximum throughput	SNR [dB]
1	2	Normal	EPA 5Hz Low	A3-6	30%	-4.5
					70%	-0.8
				A4-7	70%	11.3
				A5-6	70%	18.8
			EVA 5Hz Low	A3-1	30%	-2.8
					70%	1.8
				A4-1	30%	4.2
					70%	11.4
				A5-1	70%	18.7
			EVA 70Hz Low	A3-6	30%	-4.5
					70%	-0.3
				A4-7	30%	4.2
					70%	12.9
			ETU 70Hz* Low	A3-1	30%	-2.5
					70%	2.4
			ETU 300Hz* Low	A3-1	30%	-2.2
					70%	2.9
		Extended	ETU 70Hz* Low	A4-2	30%	4.9
					70%	13.6
	4	Normal	EPA 5Hz Low	A3-6	30%	-7.2
					70%	-3.8
				A4-7	70%	7.6
				A5-6	70%	15.0
			EVA 5Hz Low	A3-1	30%	-5.0
					70%	-1.2
				A4-1	30%	1.2
					70%	7.9
				A5-1	70%	15.7
			EVA 70Hz Low	A3-6	30%	-7.0
					70%	-3.3
				A4-7	30%	0.7
					70%	8.5
			ETU 70Hz* Low	A3-1	30%	-4.8
					70%	-1.0
			ETU 300Hz* Low	A3-1	30%	-4.6
					70%	-0.6
		Extended	ETU 70Hz* Low	A4-2	30%	1.6
					70%	10.1
Note*: Not applicable for Local Area BS and Home BS.						

ONEPLUS - EX. 1027

Table 8.2.1.1-6 Minimum requirements for PUSCH, 20 MHz Channel Bandwidth, 1Tx

Number of TX antennas	Number of RX antennas	Cyclic prefix	Propagation conditions and correlation matrix (Annex B)	FRC (Annex A)	Fraction of maximum throughput	SNR [dB]
1	2	Normal	EPA 5Hz Low	A3-7	30%	-4.2
					70%	-0.4
				A4-8	70%	11.5
				A5-7	70%	19.7
			EVA 5Hz Low	A3-1	30%	-2.7
					70%	1.8
				A4-1	30%	4.3
					70%	11.5
				A5-1	70%	18.7
			EVA 70Hz Low	A3-7	30%	-4.1
					70%	0.2
				A4-8	30%	4.2
					70%	13.0
			ETU 70Hz* Low	A3-1	30%	-2.4
					70%	2.4
			ETU 300Hz* Low	A3-1	30%	-2.1
					70%	2.9
		Extended	ETU 70Hz* Low	A4-2	30%	4.7
					70%	13.6
	4	Normal	EPA 5Hz Low	A3-7	30%	-6.8
					70%	-3.5
				A4-8	70%	7.5
				A5-7	70%	15.9
			EVA 5Hz Low	A3-1	30%	-5.1
					70%	-1.3
				A4-1	30%	1.2
					70%	7.9
				A5-1	70%	15.6
			EVA 70Hz Low	A3-7	30%	-6.7
					70%	-2.9
				A4-8	30%	0.7
					70%	8.6
			ETU 70Hz* Low	A3-1	30%	-4.4
					70%	-0.9
			ETU 300Hz* Low	A3-1	30%	-4.6
					70%	-0.7
		Extended	ETU 70Hz* Low	A4-2	30%	1.6
					70%	10.0
Note*: Not applicable for Local Area BS and Home BS.						

Table 8.2.1.1-7 Minimum requirements for PUSCH, 1.4 MHz Channel Bandwidth, 2Tx

Number of TX antennas	Number of RX antennas	Cyclic prefix	Propagation conditions and correlation matrix (Annex B)	FRC (Annex A)	Fraction of maximum throughput	SNR [dB]
2	2	Normal	EPA 5Hz Low	A3-2	70%	4.6
				A4-3	70%	17.70
	4	Normal	EPA 5Hz Low	A3-2	70%	-0.1
				A4-3	70%	11.9

ONEPLUS - EX. 1027

Table 8.2.1.1-8 Minimum requirements for PUSCH, 3 MHz Channel Bandwidth, 2Tx

Number of TX antennas	Number of RX antennas	Cyclic prefix	Propagation conditions and correlation matrix (Annex B)	FRC (Annex A)	Fraction of maximum throughput	SNR [dB]
2	2	Normal	EPA 5Hz Low	A3-3	70%	4.4
				A4-4	70%	17.6
	4	Normal	EPA 5Hz Low	A3-3	70%	0.3
				A4-4	70%	11.8

Table 8.2.1.1-9 Minimum requirements for PUSCH, 5 MHz Channel Bandwidth, 2Tx

Number of TX antennas	Number of RX antennas	Cyclic prefix	Propagation conditions and correlation matrix (Annex B)	FRC (Annex A)	Fraction of maximum throughput	SNR [dB]
2	2	Normal	EPA 5Hz Low	A3-4	70%	3.7
				A4-5	70%	18.2
	4	Normal	EPA 5Hz Low	A3-4	70%	-0.5
				A4-5	70%	11.9

Table 8.2.1.1-10 Minimum requirements for PUSCH, 10 MHz Channel Bandwidth, 2Tx

Number of TX antennas	Number of RX antennas	Cyclic prefix	Propagation conditions and correlation matrix (Annex B)	FRC (Annex A)	Fraction of maximum throughput	SNR [dB]
2	2	Normal	EPA 5Hz Low	A3-5	70%	4.2
				A4-6	70%	18.6
	4	Normal	EPA 5Hz Low	A3-5	70%	0.2
				A4-6	70%	12.0

Table 8.2.1.1-11 Minimum requirements for PUSCH, 15 MHz Channel Bandwidth, 2Tx

Number of TX antennas	Number of RX antennas	Cyclic prefix	Propagation conditions and correlation matrix (Annex B)	FRC (Annex A)	Fraction of maximum throughput	SNR [dB]
2	2	Normal	EPA 5Hz Low	A3-6	70%	3.7
				A4-7	70%	19.4
	4	Normal	EPA 5Hz Low	A3-6	70%	-0.2
				A4-7	70%	12.7

Table 8.2.1.1-12 Minimum requirements for PUSCH, 20 MHz Channel Bandwidth, 2Tx

Number of TX antennas	Number of RX antennas	Cyclic prefix	Propagation conditions and correlation matrix (Annex B)	FRC (Annex A)	Fraction of maximum throughput	SNR [dB]
2	2	Normal	EPA 5Hz Low	A3-7	70%	4.4
				A4-8	70%	19.7
	4	Normal	EPA 5Hz Low	A3-7	70%	0.5
				A4-8	70%	12.7

ONEPLUS - EX. 1027

8.2.2 Requirements for UL timing adjustment

The performance requirement of UL timing adjustment is determined by a minimum required throughput for the moving UE at given SNR. The performance requirements assume HARQ retransmissions. The performance requirements for UL timing adjustment scenario 2 defined in Annex B.4 are optional.

In the tests for UL timing adjustment, two signals are configured, one being transmitted by a moving UE and the other being transmitted by a stationary UE. The transmission of SRS from UE is optional. FRC parameters in Table A.7-1 and Table A.8-1 are applied for both UEs. The received power for both UEs is the same. The resource blocks allocated for both UEs are consecutive. In Scenario 2, Doppler shift is not taken into account.

This requirement shall not be applied to Local Area BS and Home BS.

Table 8.2.2-1 Test parameters for testing UL timing adjustment

Parameter	Value
Maximum number of HARQ transmissions	4
RV sequence	0, 2, 3, 1, 0, 2, 3, 1
Uplink-downlink allocation for TDD	Configuration 1 (2:2)
Subframes in which PUSCH is transmitted	For FDD: subframe #0, #2, #4, #6, and #8 in radio frames For TDD: subframe #2, #3, #7 and #8 in radio frames
Subframes in which sounding RS is transmitted (Note 1)	For FDD: subframe #1 in radio frames For TDD: UpPTS in subframe #1 in radio frames
Note 1. The transmission of SRS is optional.	

8.2.2.1 Minimum requirements

The throughput shall be ≥ 70% of the maximum throughput of the reference measurement channel as specified in Annex A for the moving UE at the SNR given in table 8.2.2.1-1.

Table 8.2.2.1-1 Minimum requirements for UL timing adjustment

Number of TX antennas	Number of RX antennas	Cyclic prefix	Channel Bandwidth [MHz]	Moving propagation conditions and correlation matrix (Annex B)	FRC (Annex A)	SNR [dB]
1	2	Normal	1.4	Scenario 1 Low	A7-1	13.1
				Scenario 2 Low	A8-1	-1.9
			3	Scenario 1 Low	A7-2	13.4
				Scenario 2 Low	A8-2	-1.5
			5	Scenario 1 Low	A7-3	13.2
				Scenario 2 Low	A8-3	-1.6
			10	Scenario 1 Low	A7-4	13.8
				Scenario 2 Low	A8-4	-1.8
			15	Scenario 1 Low	A7-5	14.0
				Scenario 2 Low	A8-5	-1.8
			20	Scenario 1 Low	A7-6	13.9
				Scenario 2 Low	A8-6	-1.8

8.2.3 Requirements for high speed train

The performance requirement of PUSCH for high speed train is determined by a minimum required throughput for a given SNR. The required throughput is expressed as a fraction of maximum throughput for the FRCs listed in Annex A.

ONEPLUS - EX. 1027

The performance requirements assume HARQ retransmissions. The performance requirements for high speed train are optional.

This requirement shall not be applied to Local Area BS and Home BS.

Table 8.2.3-1 Test parameters for high speed train

Parameter	Value
Maximum number of HARQ transmissions	4
RV sequence	0, 2, 3, 1, 0, 2, 3, 1
Uplink-downlink allocation for TDD	Configuration 1 (2:2)
Subframes in which PUSCH is transmitted	For FDD: subframe #0 and #8 in radio frames for which SFN mod 4 = 0 subframe #6 in radio frames for which SFN mod 4 = 1 subframe #4 in radio frames for which SFN mod 4 = 2 subframe #2 in radio frames for which SFN mod 4 = 3 For TDD: subframe #2 in each radio frame
Subframes in which PUCCH is transmitted (Note1, Note 2)	For FDD: subframe #5 in radio frames For TDD: subframe #3 in each radio frame
Note 1. The configuration of PUCCH (format 2) is optional.Note 2. The SNR values per antenna shall be set to -4.5 dB and -1.5 dB for Scenario 1 and 3, respectively.	

8.2.3.1 Minimum requirements

The throughput shall be equal to or larger than the fraction of maximum throughput stated in table 8.2.3.1-1 at the given SNR.

Table 8.2.3.1-1 Minimum requirements of PUSCH for high speed train

Channel Bandwidth [MHz]	Cyclic prefix	FRC (Annex A)	Number of TX antennas	Number of RX antennas	Propagation conditions and correlation matrix (Annex B)	Fraction of maximum throughput	SNR [dB]
1.4	Normal	A3-2	1	1	HST Scenario 3	30%	-1.5
						70%	1.9
				2	HST Scenario 1 Low	30%	-3.9
						70%	-0.6
3	Normal	A3-3		1	HST Scenario 3	30%	-2.1
						70%	1.6
				2	HST Scenario 1 Low	30%	-4.5
						70%	-1.0
5	Normal	A3-4		1	HST Scenario 3	30%	-2.6
						70%	1.3
				2	HST Scenario 1 Low	30%	-5.1
						70%	-1.4
10	Normal	A3-5		1	HST Scenario 3	30%	-2.7
						70%	1.2
				2	HST Scenario 1 Low	30%	-5.4
						70%	-1.5
15	Normal	A3-6		1	HST Scenario 3	30%	-2.7
						70%	1.2
				2	HST Scenario 1 Low	30%	-5.2
						70%	-1.4
20	Normal	A3-7		1	HST Scenario 3	30%	-2.7
						70%	1.2
				2	HST Scenario 1 Low	30%	-5.3
						70%	-1.4

ONEPLUS - EX. 1027

8.2.4 Requirements for HARQ-ACK multiplexed on PUSCH

Two performance requirements are defined for HARQ-ACK multiplexed on PUSCH: ACK false detection and ACK missed detection requirements.

The ACK false detection probability for PUSCH is the probability that ACK is detected when data only is sent on symbols where HARQ-ACK information can be allocated (i.e. by puncturing data).

The ACK missed detection probability for HARQ-ACK multiplexed on PUSCH is the conditional probability of not detecting an ACK when it was sent on PUSCH resources.

In the tests for ACK missed detection on PUSCH, data is punctured by the control information (i.e. ACK/NAK) in both slots within subframe on symbols as specified in 36.212.

In both tests none of CQI, RI nor SRS is transmitted. Tests are to be performed for one bit HARQ-ACK information (O = 1).

8.2.4.1 Minimum requirement

The ACK false detection probability as well as the ACK missed detection probability for HARQ-ACK multiplexed on PUSCH shall not exceed 1% at PUSCH power settings presented in table 8.2.4.1-1.

Table 8.2.4.1-1 Minimum requirements for HARQ-ACK multiplexed on PUSCH

Number of TX antennas	Number of RX antennas	Cyclic Prefix	Propagation conditions and correlation matrix (Annex B)	Channel Bandwidth [MHz]	FRC (Annex A)	$I_{offset}^{HARQ-ACK}$	SNR [dB]
1	2	Normal	EVA 5* Low	1.4	A.3-1	8	6.8
					A.4-3	5	13.6
				3	A.3-1	8	6.8
					A.4-4	5	13.1
				5	A.3-1	8	6.9
					A.4-5	5	12.4
				10	A.3-1	8	6.8
					A.4-6	5	12.4
				15	A.3-1	8	6.8
					A.4-7	5	12.0
				20	A.3-1	8	6.8
					A.4-8	5	11.9
			ETU70** Low	1.4	A.3-1	8	6.6
					A.4-3	5	13.8
				3	A.3-1	8	6.6
					A.4-4	5	12.9
				5	A.3-1	8	6.5
					A.4-5	5	12.5
				10	A.3-1	8	6.6
					A.4-6	5	12.3
				15	A.3-1	8	6.7
					A.4-7	5	12.1
				20	A.3-1	8	6.5
					A.4-8	5	12
Note*: Not applicable for Wide Area BS and Medium Range BS. Note**: Not applicable for Local Area BS and Home BS.							

8.3 Performance requirements for PUCCH

8.3.1 DTX to ACK performance

The DTX to ACK requirement is valid for any number of receive antennas, for all frame structures and for any channel bandwidth.

ONEPLUS - EX. 1027

The DTX to ACK probability for multi user PUCCH case denotes the probability that ACK is detected when nothing is sent on the wanted signal and the interfering signals are present.

8.3.1.1 Minimum requirement

The DTX to ACK probability, i.e. the probability that ACK is detected when nothing was sent, shall not exceed 1%, where the performance measure definition is as follows:

$$\text{Prob(PUCCH DTX} \rightarrow \text{ACK bits)} = \frac{\#(\text{false ACK bits})}{\#(\text{PUCCH DTX}) \times \#(\text{ACK/NAK bits})} \leq 10^{-2},$$

where:

- #(false ACK bits) denotes the number of detected ACK bits.
- #(ACK/NAK bits) denotes the number of encoded bits per sub-frame
- #(PUCCH DTX) denotes the number of DTX occasions

8.3.2 ACK missed detection requirements for single user PUCCH format 1a

The ACK missed detection probability is the probability of not detecting an ACK when an ACK was sent.

ACK/NAK repetitions are disabled for PUCCH transmission.

Test parameters for PUCCH transmission on two antenna ports are presented in Annex A.10.

8.3.2.1 Minimum requirements

The ACK missed detection probability shall not exceed 1% at the SNR given in table 8.3.2.1-1 for 1Tx and in table 8.3.2.1-2 for 2Tx case.

Table 8.3.2.1-1 Minimum requirements for single user PUCCH format 1a, 1Tx

Number of TX antennas	Number of RX antennas	Cyclic Prefix	Propagation conditions and correlation matrix (Annex B)	Channel Bandwidth / SNR [dB]					
				1.4 MHz	3 MHz	5 MHz	10 MHz	15 MHz	20 MHz
1	2	Normal	EPA 5 Low	-2.5	-3.9	-4.8	-5.4	-5.3	-5.1
			EVA 5 Low	-4.5	-5.1	-5.1	-5.0	-5.1	-5.1
			EVA 70 Low	-4.9	-5.2	-5.2	-5.1	-5.2	-5.1
			ETU 300* Low	-5.0	-5.1	-4.9	-5.0	-5.2	-5.2
		Extended	ETU 70* Low	-4.2	-4.3	-4.1	-4.3	-4.2	-4.3
	4	Normal	EPA 5 Low	-7.9	-8.4	-8.7	-8.9	-8.9	-9.0
			EVA 5 Low	-8.8	-9.1	-9.1	-8.8	-8.9	-8.9
			EVA 70 Low	-8.9	-9.0	-9.0	-8.8	-9.0	-8.8
			ETU 300* Low	-8.7	-8.9	-8.7	-8.7	-8.9	-8.8
		Extended	ETU 70* Low	-7.9	-8.1	-7.9	-8.1	-8.0	-8.0
Note*: Not applicable for Local Area BS and Home BS.									

ONEPLUS - EX. 1027

Table 8.3.2.1-2 Minimum requirements for single user PUCCH format 1a, 2Tx

Number of TX antennas	Number of RX antennas	Cyclic Prefix	Propagation conditions and correlation matrix (Annex B)	Channel Bandwidth / SNR [dB]					
				1.4 MHz	3 MHz	5 MHz	10 MHz	15 MHz	20 MHz
2	2	Normal	EPA 5 Low	-4.6	-4.9	-6.4	-6.5	-6.5	-6.7
			EVA 70 Low	-5.8	-5.9	-6.4	-5.9	-6.4	-6.4
	4	Normal	EPA 5 Low	-8.5	-8.5	-9.3	-9.5	-9.5	-9.5
			EVA 70 Low	-9.0	-9.2	-9.3	-9.3	-9.4	-9.5

8.3.3 CQI performance requirements for PUCCH format 2

The CQI block error probability (BLER) is defined as the conditional probability of incorrectly decoding the CQI information when the CQI information is sent. All CQI information shall be decoded (no exclusion due to DTX).

The CQI information bit payload per sub-frame is equal to 4 bits.

Test parameters for PUCCH transmission on two antenna ports are presented in Annex A.10.

8.3.3.1 Minimum requirements

The CQI block error probability shall not exceed 1% at the SNR given in table 8.3.3.1-1 for 1Tx and in table 8.3.3.1-2 for 2Tx case.

Table 8.3.3.1-1 Minimum requirements for PUCCH format 2, 1Tx

Number of TX antennas	Number of RX antennas	Cyclic Prefix	Propagation conditions and correlation matrix (Annex B)	Channel Bandwidth / SNR [dB]					
				1.4 MHz	3 MHz	5 MHz	10 MHz	15 MHz	20 MHz
1	**2**	**Normal**	**EVA 5* Low**	**-3.7**	**-4.1**	**-4.4**	**-4.0**	**-4.2**	**-4.2**
			ETU 70 Low**	**-3.9**	**-4.4**	**-4.2**	**-4.4**	**-4.4**	**-4.4**

Note*: Not applicable for Wide Area BS and Medium Range BS.
Note**: Not applicable for Local Area BS and Home BS.

Table 8.3.3.1-2 Minimum requirements for PUCCH format 2, 2Tx

Number of TX antennas	Number of RX antennas	Cyclic Prefix	Propagation conditions and correlation matrix (Annex B)	Channel Bandwidth / SNR [dB]					
				1.4 MHz	3 MHz	5 MHz	10 MHz	15 MHz	20 MHz
2	2	Normal	EVA 5 Low	-5.7	-5.6	-5.9	-5.8	-5.9	-5.9

8.3.4 ACK missed detection requirements for multi user PUCCH format 1a

The ACK missed detection probability is the conditional probability of not detecting an ACK on the wanted signal in the presence of the wanted signal and the interfering signals.

Test parameters for multi user PUCCH case are presented in Annex A.9.

ACK/NAK repetitions are disabled for PUCCH transmission.

ONEPLUS - EX. 1027

8.3.4.1 Minimum requirement

The ACK missed detection probability for multi user PUCCH case shall not exceed 1% at the SNR given in table 8.3.4.1-1.

Table 8.3.4.1-1 Minimum requirements for multi user PUCCH case

Number of TX antennas	Number of RX antennas	Cyclic Prefix	Propagation conditions and correlation matrix (Annex B)	Channel Bandwidth / SNR [dB]					
				1.4 MHz	3 MHz	5 MHz	10 MHz	15 MHz	20 MHz
1	2	Normal	ETU 70* Low	-4.1	-4.4	-4.4	-4.6	-4.6	-4.4
Note*: Not applicable for Local Area BS and Home BS.									

8.3.5 ACK missed detection requirements for PUCCH format 1b with Channel Selection

The ACK missed detection probability is the probability of not detecting an ACK bit when an ACK bit was sent on particular channel, with each missed ACK bit counted as one error.

The number of encoded ACK bits per sub-frame is equal to 4 bits (AAAA),

ACK/NAK repetitions are disabled for PUCCH transmission.

This requirement is applicable for FDD and TDD.

8.3.5.1 Minimum requirements

The ACK missed detection probability shall not exceed 1% at the SNR given in table 8.3.5.1-1.

Table 8.3.5.1-1 Minimum requirements for PUCCH format 1b with Channel Selection

Number of Tx antennas	Number of RX antennas	Cyclic Prefix	Propagation Conditions and correlation matrix (Annex B)	Channel Bandwidth / SNR [dB]					
				1.4MHz	3MHz	5MHz	10 MHz	15MHz	20MHz
1	2	Normal	EPA 5 Low	-	-	-	-4,5	-4,6	-4,6
			EVA70 Low	-	-	-	-4,3	-4,5	-4,5
	4	Normal	EPA 5 Low	-	-	-	-8,4	-8,5	-8,6
			EVA70 Low	-	-	-	-8,3	-8,5	-8,5

8.3.6 ACK missed detection requirements for PUCCH format 3

The ACK missed detection probability is the probability of not detecting an ACK bit when an ACK bit was sent on the particular bit position, with each missed ACK bit being accounted as one error.

The number of encoded ACK/NAK bits per sub-frame is defined for two cases as presented below:

- 4AN bits: applicable for FDD and TDD
- 16AN bits : applicable for TDD

ACK/NAK repetitions are disabled for PUCCH transmission. Random codeword selection is assumed.

ONEPLUS - EX. 1027

8.3.6.1 Minimum requirements

The ACK missed detection probability shall not exceed 1% at the SNR given in table 8.3.6.1-1 and table 8.3.6.1-2, for 4 and 16 AN bits per sub-frame, respectively.

Table 8.3.6.1-1 Minimum requirements for PUCCH format 3, 4AN bits

Number of Tx antennas	Number of RX antennas	Cyclic Prefix	Propagation Conditions and correlation matrix (Annex B)	Channel Bandwidth / SNR [dB]					
				1.4MHz	3MHz	5MHz	10 MHz	15MHz	20MHz
1	2	Normal	EPA 5 Low	-	-	-	-3,7	-3,8	-3,8
			EVA70 Low	-	-	-	-3,5	-3,6	-3,7
	4	Normal	EPA 5 Low	-	-	-	-7,3	-7,4	-7,5
			EVA70 Low	-	-	-	-7,2	-7,3	-7,3

Table 8.3.6.1-2 Minimum requirements for PUCCH format 3, 16AN bits

Number of Tx antennas	Number of RX antennas	Cyclic Prefix	Propagation Conditions and correlation matrix (Annex B)	Channel Bandwidth / SNR [dB]					
				1.4MHz	3MHz	5MHz	10 MHz	15MHz	20MHz
1	2	Normal	EPA 5 Low	-	-	-	-1,3	-1,2	-1,2
			EVA70 Low	-	-	-	-0,8	-0,9	-0,9
	4	Normal	EPA 5 Low	-	-	-	-5,3	-5,3	-5,4
			EVA70 Low	-	-	-	-5,0	-5,1	-5,1

8.3.7 NAK to ACK requirements for PUCCH format 3

The NAK to ACK detection probability is the probability that an ACK bit is falsely detected when an NAK bit was sent on the particular bit position, where the NAK to ACK detection probability is defined as follows:

$$\text{Prob(PUCCH NACK} \rightarrow \text{ACK bits)} = \frac{\#(\text{NACK bits decoded as ACK bits})}{\#(\text{Total NACK bits})},$$

where:

- $\#(\text{Total NACK bits})$ denotes the total number of NAK bits transmitted
- $\#(\text{NACK bits decoded as ACK bits})$ denotes the number of NAK bits decoded as ACK bits at the receiver, i.e. the number of received ACK bits
- NAK bits in the definition do not contain the NAK bits which are mapped from DTX, i.e. NAK bits received when DTX is sent should not be considered.

ACK/NAK repetitions are disabled for PUCCH transmission. Random codeword selection is assumed.

Note: NAK to ACK requirement only applies to the PUCCH format3 16AN bits cases.

8.3.7.1 Minimum requirement

The NAK to ACK probability shall not exceed 0,1% at the SNR given in table 8.3.7.1-1 for 16 AN bits.

ONEPLUS - EX. 1027

Table 8.3.7.1-1 Minimum requirements for PUCCH format 3, 16AN bits

Number of Tx antennas	Number of RX antennas	Cyclic Prefix	Propagation Conditions and correlation matrix (Annex B)	Channel Bandwidth / SNR [dB]					
				1.4MHz	3MHz	5MHz	10 MHz	15MHz	20MHz
1	2	Normal	EPA 5 Low	-	-	-	1,4	1,6	1,5
			EVA70 Low	-	-	-	2,1	1,9	1,9
	4	Normal	EPA 5 Low	-	-	-	-3,1	-3,3	-3,5
			EVA70 Low	-	-	-	-2,9	-3,1	-3,2

8.3.8 CQI performance requirements for PUCCH format 2 with DTX detection

The requirements in this subclause apply to a BS supporting PUCCH format 2 with DTX. It is optional for a BS to support PUCCH format 2 with DTX.

A BS may meet the PUCCH format 2 requirements specified in Section 8.3.8.1 instead of requirements specified in Section 8.3.3.1.

The CQI block error probability (BLER) is defined as the sum of the:

- conditional probability of incorrectly decoding the CQI information when the CQI information is sent and
- conditional probability of detecting UE transmission as DTX, when the CQI information is sent.

The CQI false alarm probability is defined as the conditional probability of false detecting the CQI information transmitted from UE when no CQI information is sent.

The CQI information bit payload per sub-frame is equal to 4 bits.

Test parameters for PUCCH transmission on two antenna ports are presented in Annex A.10.

8.3.8.1 Minimum requirements

The CQI false alarm probability and the CQI block error probability shall not exceed 10% and 1%, respectively, at the SNR given in table 8.3.8.1-1.

Table 8.3.8.1-1 Minimum requirements for PUCCH format 2 with DTX detection

Number of TX antennas	Number of RX antennas	Cyclic Prefix	Propagation conditions and correlation matrix (Annex B)	Channel Bandwidth / SNR [dB]					
				1.4 MHz	3 MHz	5 MHz	10 MHz	15 MHz	20 MHz
1	2	Normal	EVA 5* Low	-3.7	-4.0	-4.4	-4.0	-4.2	-4.2
			ETU 70** Low	-3.7	-4.0	-3.7	-4.1	-3.9	-4.1
2	2	Normal	EVA 5 Low	-5.3	-5.2	-5.5	-5.4	-5.3	-5.5
Note*: Not applicable for Wide Area BS and Medium Range BS. Note**: Not applicable for Local Area BS and Home BS.									

8.4 Performance requirements for PRACH

8.4.1 PRACH False alarm probability

The false alarm requirement is valid for any number of receive antennas, for all frame structures and for any channel bandwidth.

ONEPLUS - EX. 1027

The false alarm probability is the conditional total probability of erroneous detection of the preamble (i.e. erroneous detection from any detector) when input is only noise.

8.4.1.1 Minimum requirement

The false alarm probability shall be less than or equal to 0.1%.

8.4.2 PRACH detection requirements

The probability of detection is the conditional probability of correct detection of the preamble when the signal is present. There are several error cases – detecting different preamble than the one that was sent, not detecting a preamble at all or correct preamble detection but with the wrong timing estimation. For AWGN, a timing estimation error occurs if the estimation error of the timing of the strongest path is larger than 1.04us. For ETU70, a timing estimation error occurs if the estimation error of the timing of the strongest path is larger than 2.08us. The strongest path for the timing estimation error refers to the strongest path (i.e. average of the delay of all paths having the same highest gain = 310ns for ETU) in the power delay profile.

The test preambles for normal mode are listed in table A.6-1 and the test preambles for high speed mode are listed in A.6-2.

8.4.2.1 Minimum requirements

The probability of detection shall be equal to or exceed 99% for the SNR levels listed in table 8.4.2.1-1 and 8.4.2.1-2.

The requirements for Burst format 4 are optional and only valid for base stations supporting TDD. The requirements for high speed mode (table 8.4.2.1-2) are only valid for the base stations supporting high speed mode.

Table 8.4.2.1-1 PRACH missed detection requirements for Normal Mode

Number of TX antennas	Number of RX antennas	Propagation conditions and correlation matrix (Annex B)	Frequency offset	SNR [dB]				
				Burst format 0	Burst format 1	Burst format 2	Burst format 3	Burst format 4
1	2	AWGN	0	-14.2	-14.2	-16.4	-16.5	-7.2
		ETU 70 Low*	270 Hz	-8.0	-7.8	-10.0	-10.1	-0.1
	4	AWGN	0	-16.9	-16.7	-19.0	-18.8	-9.8
		ETU 70 Low*	270 Hz	-12.1	-11.7	-14.1	-13.9	-5.1
Note*: Not applicable for Local Area BS and Home BS.								

The requirements in Table 8.4.2.1-2 shall not be applied to Local Area BS and Home BS.

Table 8.4.2.1-2 PRACH missed detection requirements for High speed Mode

Number of TX antennas	Number of RX antennas	Propagation conditions and correlation matrix (Annex B)	Frequency offset	SNR [dB]			
				Burst format 0	Burst format 1	Burst format 2	Burst format 3
1	2	AWGN	0	-14.1	-14.2	-16.3	-16.6
		ETU 70 Low	270 Hz	-7.4	-7.3	-9.3	-9.5
		AWGN	625 Hz	-12.4	-12.3	-14.4	-14.4
		AWGN	1340 Hz	-13.4	-13.5	-15.5	-15.7
	4	AWGN	0	-16.9	-16.6	-18.9	-18.8
		ETU 70 Low	270 Hz	-11.8	-11.4	-13.7	-13.7
		AWGN	625 Hz	-14.9	-14.6	-16.8	-16.8
		AWGN	1340 Hz	-15.9	-15.5	-17.8	-17.8

ONEPLUS - EX. 1027

Annex A (normative): Reference measurement channels

The parameters for the reference measurement channels are specified in clause A.1 for reference sensitivity and in-channel selectivity and in clause A.2 for dynamic range.

A schematic overview of the encoding process for the reference measurement channels is provided in Figure A-1.

Receiver requirements in the present document are defined with a throughput stated relative to the Maximum throughput of the FRC. The Maximum throughput for an FRC equals the Payload size * the Number of uplink subframes per second. For FDD, 1000 uplink sub-frames per second are used.

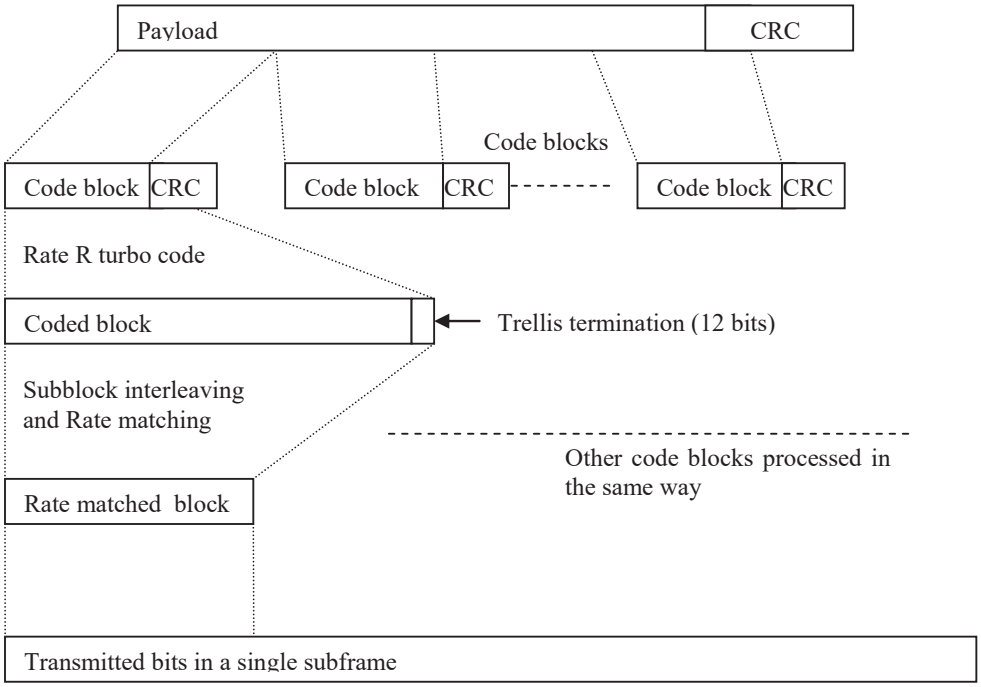

Figure A-1. Schematic overview of the encoding process

A.1 Fixed Reference Channels for reference sensitivity and in-channel selectivity (QPSK, R=1/3)

The parameters for the reference measurement channels are specified in Table A.1-1 for reference sensitivity and in-channel selectivity.

ONEPLUS - EX. 1027

Table A.1-1 FRC parameters for reference sensitivity and in-channel selectivity

Reference channel	A1-1	A1-2	A1-3	A1-4	A1-5
Allocated resource blocks	6	15	25	3	9
DFT-OFDM Symbols per subframe	12	12	12	12	12
Modulation	QPSK	QPSK	QPSK	QPSK	QPSK
Code rate	1/3	1/3	1/3	1/3	1/3
Payload size (bits)	600	1544	2216	256	936
Transport block CRC (bits)	24	24	24	24	24
Code block CRC size (bits)	0	0	0	0	0
Number of code blocks - C	1	1	1	1	1
Coded block size including 12bits trellis termination (bits)	1884	4716	6732	852	2892
Total number of bits per sub-frame	1728	4320	7200	864	2592
Total symbols per sub-frame	864	2160	3600	432	1296

A.2 Fixed Reference Channels for dynamic range (16QAM, R=2/3)

The parameters for the reference measurement channels are specified in Table A.2-1 for dynamic range.

Table A.2-1 FRC parameters for dynamic range

Reference channel	A2-1	A2-2	A2-3
Allocated resource blocks	6	15	25
DFT-OFDM Symbols per subframe	12	12	12
Modulation	16QAM	16QAM	16QAM
Code rate	2/3	2/3	2/3
Payload size (bits)	2344	5992	9912
Transport block CRC (bits)	24	24	24
Code block CRC size (bits)	0	0	24
Number of code blocks - C	1	1	2
Coded block size including 12bits trellis termination (bits)	7116	18060	14988
Total number of bits per sub-frame	3456	8640	14400
Total symbols per sub-frame	864	2160	3600

A.3 Fixed Reference Channels for performance requirements (QPSK 1/3)

Table A.3-1 FRC parameters for performance requirements (QPSK 1/3)

Reference channel	A3-1	A3-2	A3-3	A3-4	A3-5	A3-6	A3-7
Allocated resource blocks	1	6	15	25	50	75	100
DFT-OFDM Symbols per subframe	12	12	12	12	12	12	12
Modulation	QPSK	QPSK	QPSK	QPSK	QPSK	QPSK	QPSK
Code rate	1/3	1/3	1/3	1/3	1/3	1/3	1/3
Payload size (bits)	104	600	1544	2216	5160	6712	10296
Transport block CRC (bits)	24	24	24	24	24	24	24
Code block CRC size (bits)	0	0	0	0	0	24	24
Number of code blocks - C	1	1	1	1	1	2	2
Coded block size including 12bits trellis termination (bits)	396	1884	4716	6732	15564	10188	15564
Total number of bits per sub-frame	288	1728	4320	7200	14400	21600	28800
Total symbols per sub-frame	144	864	2160	3600	7200	10800	14400

ONEPLUS - EX. 1027

A.4 Fixed Reference Channels for performance requirements (16QAM 3/4)

Table A.4-1 FRC parameters for performance requirements (16QAM 3/4)

Reference channel	A4-1	A4-2	A4-3	A4-4	A4-5	A4-6	A4-7	A4-8
Allocated resource blocks	1	1	6	15	25	50	75	100
DFT-OFDM Symbols per subframe	12	10	12	12	12	12	12	12
Modulation	16QAM	16QAM	16QAM	16QAM	16QAM	16QAM	16QAM	16QAM
Code rate	3/4	3/4	3/4	3/4	3/4	3/4	3/4	3/4
Payload size (bits)	408	376	2600	6456	10680	21384	32856	43816
Transport block CRC (bits)	24	24	24	24	24	24	24	24
Code block CRC size (bits)	0	0	0	24	24	24	24	24
Number of code blocks - C	1	1	1	2	2	4	6	8
Coded block size including 12bits trellis termination (bits)	1308	1212	7884	9804	16140	16140	16524	16524
Total number of bits per sub-frame	576	480	3456	8640	14400	28800	43200	57600
Total symbols per sub-frame	144	120	864	2160	3600	7200	10800	14400

A.5 Fixed Reference Channels for performance requirements (64QAM 5/6)

Table A.5-1 FRC parameters for performance requirements (64QAM 5/6)

Reference channel	A5-1	A5-2	A5-3	A5-4	A5-5	A5-6	A5-7
Allocated resource blocks	1	6	15	25	50	75	100
DFT-OFDM Symbols per subframe	12	12	12	12	12	12	12
Modulation	64QAM	64QAM	64QAM	64QAM	64QAM	64QAM	64QAM
Code rate	5/6	5/6	5/6	5/6	5/6	5/6	5/6
Payload size (bits)	712	4392	11064	18336	36696	55056	75376
Transport block CRC (bits)	24	24	24	24	24	24	24
Code block CRC size (bits)	0	0	24	24	24	24	24
Number of code blocks - C	1	1	2	3	6	9	13
Coded block size including 12bits trellis termination (bits)	2220	13260	16716	18444	18444	18444	17484
Total number of bits per sub-frame	864	5184	12960	21600	43200	64800	86400
Total symbols per sub-frame	144	864	2160	3600	7200	10800	14400

A.6 PRACH Test preambles

Table A.6-1 Test preambles for Normal Mode

Burst format	Ncs	Logical sequence index	v
0	13	22	32
1	167	22	2
2	167	22	0
3	0	22	0
4	10	0	0

ONEPLUS - EX. 1027

Table A.6-2 Test preambles for High speed Mode

Burst format	Ncs	Logical sequence index	v
0	15	384	0
1	202	384	0
2	202	384	0
3	237	384	0

A.7 Fixed Reference Channels for UL timing adjustment (Scenario 1)

Table A.7-1 FRC parameters for UL timing adjustment (Scenario 1)

Reference channel	A7-1	A7-2	A7-3	A7-4	A7-5	A7-6
Allocated resource blocks	3	6	12	25	25	25
DFT-OFDM Symbols per subframe	12	12	12	12	12	12
Modulation	16QAM	16QAM	16QAM	16QAM	16QAM	16QAM
Code rate	3/4	3/4	3/4	3/4	3/4	3/4
Payload size (bits)	1288	2600	5160	10680	10680	10680
Transport block CRC (bits)	24	24	24	24	24	24
Code block CRC size (bits)	0	0	0	24	24	24
Number of code blocks - C	1	1	1	2	2	2
Coded block size including 12bits trellis termination (bits)	3948	7884	15564	16140	16140	16140
Total number of bits per sub-frame	1728	3456	6912	14400	14400	14400
Total symbols per sub-frame	432	864	1728	3600	3600	3600
SRS bandwidth configuration (See TS 36.211, 5.5.3) (Note 1)	7	5	3	2	5	2
SRS-Bandwidth b (See TS 36.211, 5.5.3) (Note 1, 2)	0	0	0	0	0	1
NOTE 1. The transmission of SRS is optional NOTE 2. PUSCH resource blocks shall be included in SRS resource blocks						

A.8 Fixed Reference Channels for UL timing adjustment (Scenario 2)

Table A.8-1 FRC parameters for UL timing adjustment (Scenario 2)

Reference channel	A8-1	A8-2	A8-3	A8-4	A8-5	A8-6
Allocated resource blocks	3	6	12	25	25	25
DFT-OFDM Symbols per subframe	12	12	12	12	12	12
Modulation	QPSK	QPSK	QPSK	QPSK	QPSK	QPSK
Code rate	1/3	1/3	1/3	1/3	1/3	1/3
Payload size (bits)	256	600	1224	2216	2216	2216
Transport block CRC (bits)	24	24	24	24	24	24
Code block CRC size (bits)	0	0	0	0	0	0
Number of code blocks - C	1	1	1	1	1	1
Coded block size including 12bits trellis termination (bits)	852	1884	3756	6732	6732	6732
Total number of bits per sub-frame	864	1728	3456	7200	7200	7200
Total symbols per sub-frame	432	864	1728	3600	3600	3600
SRS bandwidth configuration (See TS 36.211, 5.5.3) (Note 1)	7	5	3	2	5	2
SRS-Bandwidth b (See TS 36.211, 5.5.3) (Note 1, 2)	0	0	0	0	0	1
NOTE 1. The transmission of SRS is optional NOTE 2. PUSCH resource blocks shall be included in SRS resource blocks						

ONEPLUS - EX. 1027

A.9 Multi user PUCCH test

Table A.9-1 Test parameters for multi user PUCCH case

	Resource index for PUCCH formats 1/1a/1b $n_{\mathrm{PUCCH}}^{(1)}$	Relative power [dB]	Relative timing [ns]
Tested signal	2	-	-
Interferer 1	1	0	0
Interferer 2	7	-3	
Interferer 3	14	3	
NOTE1: The following parameters shall be used $N_{\mathrm{ID}}^{\mathrm{cell}} = 150$, $N_{\mathrm{cs}}^{(1)} = 0$ and $\Delta_{\mathrm{shift}}^{\mathrm{PUCCH}} = 2$. NOTE2: All above listed signals are transmitted on the same PUCCH resource block, with different PUCCH resource indices as presented above.			

A.10 PUCCH transmission on two antenna ports test

Table A.10-1 Test parameters for PUCCH transmission on two antenna ports case

PUCCH format	Resource indices for two antenna ports
Format 1a	$n_{\mathrm{PUCCH}}^{(1,p=p_0)} = 1$, $n_{\mathrm{PUCCH}}^{(1,p=p_1)} = 2$
Format 2	$n_{\mathrm{PUCCH}}^{(2,p=p_0)} = 1$, $n_{\mathrm{PUCCH}}^{(2,p=p_1)} = 2$
NOTE1: The following parameters shall be used $N_{\mathrm{ID}}^{\mathrm{cell}} = 150$, $N_{\mathrm{cs}}^{(1)} = 0$. For PUCCH format 1a, $\Delta_{\mathrm{shift}}^{\mathrm{PUCCH}} = 2$ is assumed. NOTE2: The signals transmitted on two antenna ports are in the same PUCCH resource block with different resource indices as presented above.	

ONEPLUS - EX. 1027

Annex B (normative): Propagation conditions

B.1 Static propagation condition

The propagation for the static performance measurement is an Additive White Gaussian Noise (AWGN) environment. No fading or multi-paths exist for this propagation model.

B.2 Multi-path fading propagation conditions

Tables B.2-1 – B.2-3 show multi-path delay profiles that are used for the performance measurements in multi-path fading environment. All taps have classical Doppler spectrum, defined as:

(CLASS) $$S(f) \propto 1/(1-(f/f_D)^2)^{0.5}$$ for $f \in -f_D, f_D$.

Table B.2-1 Extended Pedestrian A model (EPA)

Excess tap delay [ns]	Relative power [dB]
0	0.0
30	-1.0
70	-2.0
90	-3.0
110	-8.0
190	-17.2
410	-20.8

Table B.2-2 Extended Vehicular A model (EVA)

Excess tap delay [ns]	Relative power [dB]
0	0.0
30	-1.5
150	-1.4
310	-3.6
370	-0.6
710	-9.1
1090	-7.0
1730	-12.0
2510	-16.9

Table B.2-3 Extended Typical Urban model (ETU)

Excess tap delay [ns]	Relative power [dB]
0	-1.0
50	-1.0
120	-1.0
200	0.0
230	0.0
500	0.0
1600	-3.0
2300	-5.0
5000	-7.0

ONEPLUS - EX. 1027

A multipath fading propagation condition is defined by a combination of a multi-path delay profile and a maximum Doppler frequency f_D which is either 5, 70 or 300 Hz. In addidion, 200 Hz Doppler frequency is specified for UL timing adjustment performance requirement.

For carrier aggregation requirements, the fading of the signals for each carrier shall be independent.

B.3 High speed train condition

High speed train conditions are as follows:

Scenario 1: Open space

Scenario 3: Tunnel for multi-antennas

The high speed train conditions for the test of the baseband performance are two non-fading propagation channels in both scenarios. For BS with Rx diversity defined in scenario 1, the Doppler shift variation is the same between antennas.

Doppler shift for both scenarios is given by:

$$f_s(t) = f_d \cos\theta(t) \qquad \text{(B.3.1)}$$

where $f_s(t)$ is the Doppler shift and f_d is the maximum Doppler frequency. The cosine of angle $\theta(t)$ is given by:

$$\cos\theta(t) = \frac{D_s/2 - vt}{\sqrt{D_{\min}{}^2 + (D_s/2 - vt)^2}}, \; 0 \le t \le D_s/v \qquad \text{(B.3.2)}$$

$$\cos\theta(t) = \frac{-1.5D_s + vt}{\sqrt{D_{\min}{}^2 + (-1.5D_s + vt)^2}}, \; D_s/v < t \le 2D_s/v \qquad \text{(B.3.3)}$$

$$\cos\theta(t) = \cos\theta(t \bmod (2D_s/v)), \; t > 2D_s/v \qquad \text{(B.3.4)}$$

where $D_s/2$ is the initial distance of the train from BS, and $D_{\min}$ is BS-Railway track distance, both in meters; v is the velocity of the train in m/s, t is time in seconds.

Doppler shift and cosine angle is given by equation B.3.1 and B.3.2-B.3.4 respectively, where the required input parameters listed in table B.3-1 and the resulting Doppler shift shown in Figure B.3-1 and B.3-2 are applied for all frequency bands.

Table B.3-1: Parameters for high speed train conditions

Parameter	Value	
	Scenario 1	Scenario 3
D_s	1000 m	300 m
$D_{\min}$	50 m	2 m
v	350 km/h	300 km/h
f_d	1340 Hz	1150 Hz

NOTE1: Parameters for HST conditions in table B.3-1 including f_d and Doppler shift trajectories presented on figures B.3-1 and B.3-2 were derived for Band1.

ONEPLUS - EX. 1027

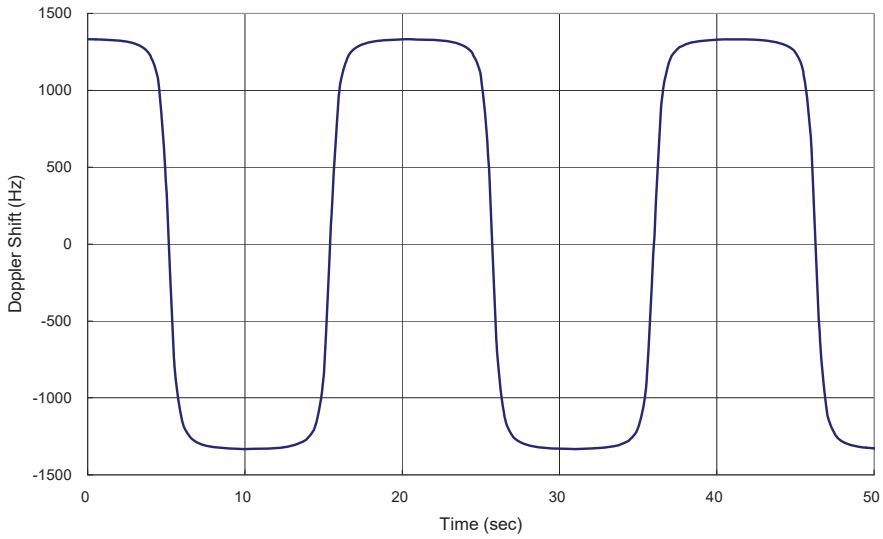

Figure B.3-1: Doppler shift trajectory for scenario 1

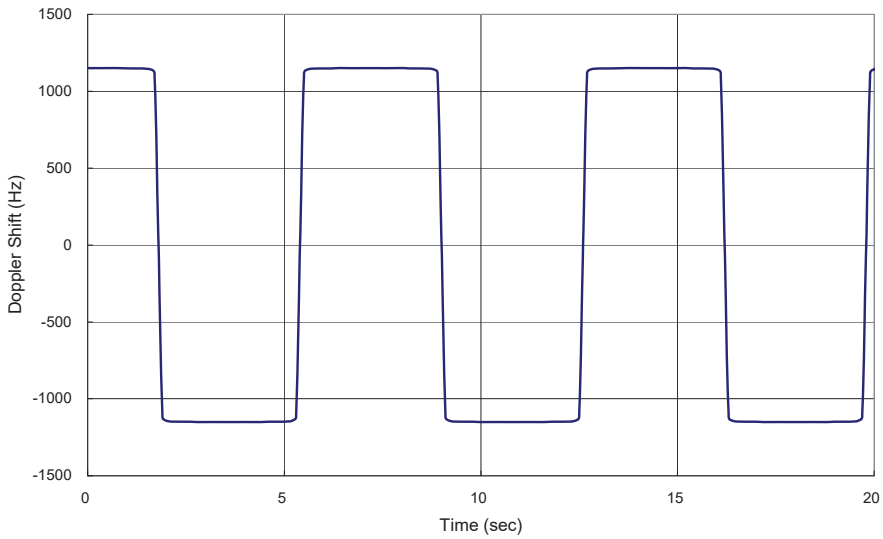

Figure B.3-2: Doppler shift trajectory for scenario 3

B.4 Moving propagation conditions

Figure B.4-1 illustrates the moving propagation conditions for the test of the UL timing adjustment performance. The time difference between the reference timing and the first tap is according Equation (B.4-1). The timing difference between moving UE and stationary UE is equal to $\Delta\tau$ - $(T_A - 31)\times 16T_s$. The relative timing among all taps is fixed. The parameters for the moving propagation conditions are shown in Table B.4-1.

ONEPLUS - EX. 1027

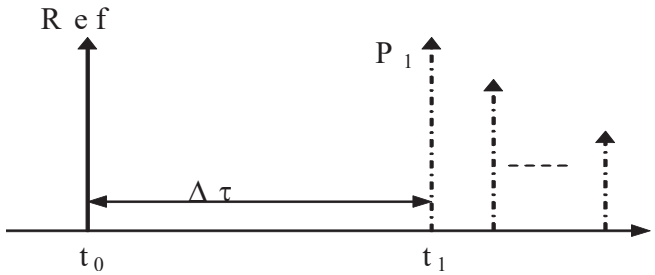

Figure B.4-1: Moving propagation conditions

$$\Delta\tau = \frac{A}{2} \cdot \sin(\Delta\omega \cdot t) \qquad \text{(B.4-1)}$$

Table B.4-1: Parameters for UL timing adjustment

Parameter	Scenario 1	Scenario 2
Channel model	Stationary UE: AWGN Moving UE: ETU200	AWGN
UE speed	120 km/h	350 km/h
CP length	Normal	Normal
A	10 μs	10 μs
Δω	0.04 s^{-1}	0.13 s^{-1}

NOTE 1: Multipath fading propagation conditions for Scenario 1 were derived for Band 1 with additional rounding applied to the Doppler frequency calculated for the specified UE speed.

NOTE 2: In Scenario 2, Doppler shift is not taken into account.

B.5 Multi-Antenna channel models

B.5.1 Definition of MIMO Correlation Matrices

Table B.5.1-1 defines the correlation matrix for the eNodeB:

Table B.5.1-1 eNodeB correlation matrix

	One antenna	Two antennas	Four antennas
eNode B Correlation	$R_{eNB} = 1$	$R_{eNB} = \begin{pmatrix} 1 & \alpha \\ \alpha^* & \mathbf{1} \end{pmatrix}$	$R_{eNB} = \begin{pmatrix} 1 & \alpha^{1/9} & \alpha^{4/9} & \alpha \\ \alpha^{1/9*} & 1 & \alpha^{1/9} & \alpha^{4/9} \\ \alpha^{4/9*} & \alpha^{1/9*} & 1 & \alpha^{1/9} \\ \alpha^* & \alpha^{4/9*} & \alpha^{1/9*} & 1 \end{pmatrix}$

Table B.5.1-2 defines the correlation matrix for the UE:

ONEPLUS - EX. 1027

Table B.5.1-2 UE correlation matrix

	One antenna	Two antennas	Four antennas
UE Correlation	$R_{UE} = 1$	$R_{UE} = \begin{pmatrix} 1 & \beta \\ \beta^* & \mathbf{1} \end{pmatrix}$	$R_{UE} = \begin{pmatrix} 1 & \beta^{1/9} & \beta^{4/9} & \beta \\ \beta^{1/9*} & 1 & \beta^{1/9} & \beta^{4/9} \\ \beta^{4/9*} & \beta^{1/9*} & 1 & \beta^{1/9} \\ \beta^* & \beta^{4/9*} & \beta^{1/9*} & 1 \end{pmatrix}$

Table B.5.1-3 defines the channel spatial correlation matrix R_{spat} . The parameters α and β in Table B.5.1-3 defines the spatial correlation between the antennas at the UE and eNB.

Table B.5.1-3: R_{spat} correlation matrices

1x2 case	$R_{spat} = R_{eNB} = \begin{pmatrix} 1 & \alpha \\ \alpha^* & 1 \end{pmatrix}$
2x2 case	$R_{spat} = R_{UE} \otimes R_{eNB} = \begin{bmatrix} 1 & \beta \\ \beta^* & 1 \end{bmatrix} \otimes \begin{bmatrix} 1 & \alpha \\ \alpha^* & 1 \end{bmatrix} = \begin{bmatrix} 1 & \alpha & \beta & \beta\alpha \\ \alpha^* & 1 & \beta\alpha^* & \beta \\ \beta^* & \beta^*\alpha & 1 & \alpha \\ \beta^*\alpha^* & \beta^* & \alpha^* & 1 \end{bmatrix}$
2x4 case	$R_{spat} = R_{UE} \otimes R_{eNB} = \begin{bmatrix} 1 & \beta \\ \beta^* & 1 \end{bmatrix} \otimes \begin{bmatrix} 1 & \alpha^{1/9} & \alpha^{4/9} & \alpha \\ \alpha^{1/9*} & 1 & \alpha^{1/9} & \alpha^{4/9} \\ \alpha^{4/9*} & \alpha^{1/9*} & 1 & \alpha^{1/9} \\ \alpha^* & \alpha^{4/9*} & \alpha^{1/9*} & 1 \end{bmatrix}$
4x4 case	$R_{spat} = R_{UE} \otimes R_{eNB} = \begin{pmatrix} 1 & \beta^{1/9} & \beta^{4/9} & \beta \\ \beta^{1/9*} & 1 & \beta^{1/9} & \beta^{4/9} \\ \beta^{4/9*} & \beta^{1/9*} & 1 & \beta^{1/9} \\ \beta^* & \beta^{4/9*} & \beta^{1/9*} & 1 \end{pmatrix} \otimes \begin{bmatrix} 1 & \alpha^{1/9} & \alpha^{4/9} & \alpha \\ \alpha^{1/9*} & 1 & \alpha^{1/9} & \alpha^{4/9} \\ \alpha^{4/9*} & \alpha^{1/9*} & 1 & \alpha^{1/9} \\ \alpha^* & \alpha^{4/9*} & \alpha^{1/9*} & 1 \end{bmatrix}$

For cases with more antennas at either eNodeB or UE or both, the channel spatial correlation matrix can still be expressed as the Kronecker product of R_{UE} and R_{eNB} according to $R_{spat} = R_{UE} \otimes R_{eNB}$.

B.5.2 MIMO Correlation Matrices at High, Medium and Low Level

The α and β for different correlation types are given in Table B.5.2-1.

Table B.5.2-1 Correlation for High Medium and Low Level

Low correlation		Medium Correlation		High Correlation	
α	β	α	β	α	β
0	0	0.9	0.3	0.9	0.9

ONEPLUS - EX. 1027

The correlation matrices for high, medium and low correlation are defined in Table B.5.2-2, B.5.2-3 and B.5.2-4 as below.

The values in Table B.5.2-2 have been adjusted for the 2x4 and 4x4 high correlation cases to insure the correlation matrix is positive semi-definite after round-off to 4 digit precision. This is done using the equation:

$$\mathbf{R}_{high} = [\mathbf{R}_{spatial} + aI_n]/(1+a)$$

Where the value "a" is a scaling factor such that the smallest value is used to obtain a positive semi-definite result. For the 2x4 high correlation case, a=0.00010. For the 4x4 high correlation case, a=0.00012.

The same method is used to adjust the 4x4 medium correlation matrix in Table B.5.2-3 to insure the correlation matrix is positive semi-definite after round-off to 4 digit precision with a =0.00012.

Table B.5.2-2: MIMO correlation matrices for high correlation

1x2 case	$R_{high} = \begin{pmatrix} 1 & 0.9 \\ 0.9 & 1 \end{pmatrix}$
2x2 case	$R_{high} = \begin{pmatrix} 1 & 0.9 & 0.9 & 0.81 \\ 0.9 & 1 & 0.81 & 0.9 \\ 0.9 & 0.81 & 1 & 0.9 \\ 0.81 & 0.9 & 0.9 & 1 \end{pmatrix}$
2x4 case	$R_{high} = \begin{bmatrix} 1.0000 & 0.9883 & 0.9542 & 0.8999 & 0.8999 & 0.8894 & 0.8587 & 0.8099 \\ 0.9883 & 1.0000 & 0.9883 & 0.9542 & 0.8894 & 0.8999 & 0.8894 & 0.8587 \\ 0.9542 & 0.9883 & 1.0000 & 0.9883 & 0.8587 & 0.8894 & 0.8999 & 0.8894 \\ 0.8999 & 0.9542 & 0.9883 & 1.0000 & 0.8099 & 0.8587 & 0.8894 & 0.8999 \\ 0.8999 & 0.8894 & 0.8587 & 0.8099 & 1.0000 & 0.9883 & 0.9542 & 0.8999 \\ 0.8894 & 0.8999 & 0.8894 & 0.8587 & 0.9883 & 1.0000 & 0.9883 & 0.9542 \\ 0.8587 & 0.8894 & 0.8999 & 0.8894 & 0.9542 & 0.9883 & 1.0000 & 0.9883 \\ 0.8099 & 0.8587 & 0.8894 & 0.8999 & 0.8999 & 0.9542 & 0.9883 & 1.0000 \end{bmatrix}$
4x4 case	$R_{high} = \begin{bmatrix} 1.0000 & 0.9882 & 0.9541 & 0.8999 & 0.9882 & 0.9767 & 0.9430 & 0.8894 & 0.9541 & 0.9430 & 0.9105 & 0.8587 & 0.8999 & 0.8894 & 0.8587 & 0.8099 \\ 0.9882 & 1.0000 & 0.9882 & 0.9541 & 0.9767 & 0.9882 & 0.9767 & 0.9430 & 0.9430 & 0.9541 & 0.9430 & 0.9105 & 0.8894 & 0.8999 & 0.8894 & 0.8587 \\ 0.9541 & 0.9882 & 1.0000 & 0.9882 & 0.9430 & 0.9767 & 0.9882 & 0.9767 & 0.9105 & 0.9430 & 0.9541 & 0.9430 & 0.8587 & 0.8894 & 0.8999 & 0.8894 \\ 0.8999 & 0.9541 & 0.9882 & 1.0000 & 0.8894 & 0.9430 & 0.9767 & 0.9882 & 0.8587 & 0.9105 & 0.9430 & 0.9541 & 0.8099 & 0.8587 & 0.8894 & 0.8999 \\ 0.9882 & 0.9767 & 0.9430 & 0.8894 & 1.0000 & 0.9882 & 0.9541 & 0.8999 & 0.9882 & 0.9767 & 0.9430 & 0.8894 & 0.9541 & 0.9430 & 0.9105 & 0.8587 \\ 0.9767 & 0.9882 & 0.9767 & 0.9430 & 0.9882 & 1.0000 & 0.9882 & 0.9541 & 0.9767 & 0.9882 & 0.9767 & 0.9430 & 0.9430 & 0.9541 & 0.9430 & 0.9105 \\ 0.9430 & 0.9767 & 0.9882 & 0.9767 & 0.9541 & 0.9882 & 1.0000 & 0.9882 & 0.9430 & 0.9767 & 0.9882 & 0.9767 & 0.9105 & 0.9430 & 0.9541 & 0.9430 \\ 0.8894 & 0.9430 & 0.9767 & 0.9882 & 0.8999 & 0.9541 & 0.9882 & 1.0000 & 0.8894 & 0.9430 & 0.9767 & 0.9882 & 0.8587 & 0.9105 & 0.9430 & 0.9541 \\ 0.9541 & 0.9430 & 0.9105 & 0.8587 & 0.9882 & 0.9767 & 0.9430 & 0.8894 & 1.0000 & 0.9882 & 0.9541 & 0.8999 & 0.9882 & 0.9767 & 0.9430 & 0.8894 \\ 0.9430 & 0.9541 & 0.9430 & 0.9105 & 0.9767 & 0.9882 & 0.9767 & 0.9430 & 0.9882 & 1.0000 & 0.9882 & 0.9541 & 0.9767 & 0.9882 & 0.9767 & 0.9430 \\ 0.9105 & 0.9430 & 0.9541 & 0.9430 & 0.9430 & 0.9767 & 0.9882 & 0.9767 & 0.9541 & 0.9882 & 1.0000 & 0.9882 & 0.9430 & 0.9767 & 0.9882 & 0.9767 \\ 0.8587 & 0.9105 & 0.9430 & 0.9541 & 0.8894 & 0.9430 & 0.9767 & 0.9882 & 0.8999 & 0.9541 & 0.9882 & 1.0000 & 0.8894 & 0.9430 & 0.9767 & 0.9882 \\ 0.8999 & 0.8894 & 0.8587 & 0.8099 & 0.9541 & 0.9430 & 0.9105 & 0.8587 & 0.9882 & 0.9767 & 0.9430 & 0.8894 & 1.0000 & 0.9882 & 0.9541 & 0.8999 \\ 0.8894 & 0.8999 & 0.8894 & 0.8587 & 0.9430 & 0.9541 & 0.9430 & 0.9105 & 0.9767 & 0.9882 & 0.9767 & 0.9430 & 0.9882 & 1.0000 & 0.9882 & 0.9541 \\ 0.8587 & 0.8894 & 0.8999 & 0.8894 & 0.9105 & 0.9430 & 0.9541 & 0.9430 & 0.9430 & 0.9767 & 0.9882 & 0.9767 & 0.9541 & 0.9882 & 1.0000 & 0.9882 \\ 0.8099 & 0.8587 & 0.8894 & 0.8999 & 0.8587 & 0.9105 & 0.9430 & 0.9541 & 0.8894 & 0.9430 & 0.9767 & 0.9882 & 0.8999 & 0.9541 & 0.9882 & 1.0000 \end{bmatrix}$

ONEPLUS - EX. 1027

Table B.5.2-3: MIMO correlation matrices for medium correlation

1x2 case	[N/A]
2x2 case	$[R_{medium} = \begin{pmatrix} 1.0000 & 0.9000 & 0.3000 & 0.2700 \\ 0.9000 & 1.0000 & 0.2700 & 0.3000 \\ 0.3000 & 0.2700 & 1.0000 & 0.9000 \\ 0.2700 & 0.3000 & 0.9000 & 1.0000 \end{pmatrix}]$
2x4 case	$[R_{medium} = \begin{pmatrix} 1.0000 & 0.9884 & 0.9543 & 0.9000 & 0.3000 & 0.2965 & 0.2863 & 0.2700 \\ 0.9884 & 1.0000 & 0.9884 & 0.9543 & 0.2965 & 0.3000 & 0.2965 & 0.2863 \\ 0.9543 & 0.9884 & 1.0000 & 0.9884 & 0.2863 & 0.2965 & 0.3000 & 0.2965 \\ 0.9000 & 0.9543 & 0.9884 & 1.0000 & 0.2700 & 0.2863 & 0.2965 & 0.3000 \\ 0.3000 & 0.2965 & 0.2863 & 0.2700 & 1.0000 & 0.9884 & 0.9543 & 0.9000 \\ 0.2965 & 0.3000 & 0.2965 & 0.2863 & 0.9884 & 1.0000 & 0.9884 & 0.9543 \\ 0.2863 & 0.2965 & 0.3000 & 0.2965 & 0.9543 & 0.9884 & 1.0000 & 0.9884 \\ 0.2700 & 0.2863 & 0.2965 & 0.3000 & 0.9000 & 0.9543 & 0.9884 & 1.0000 \end{pmatrix}]$
4x4 case	$[R_{medium} = \begin{pmatrix} 1.0000 & 0.9882 & 0.9541 & 0.8999 & 0.8747 & 0.8645 & 0.8347 & 0.7872 & 0.5855 & 0.5787 & 0.5588 & 0.5270 & 0.3000 & 0.2965 & 0.2862 & 0.2700 \\ 0.9882 & 1.0000 & 0.9882 & 0.9541 & 0.8645 & 0.8747 & 0.8645 & 0.8347 & 0.5787 & 0.5855 & 0.5787 & 0.5588 & 0.2965 & 0.3000 & 0.2965 & 0.2862 \\ 0.9541 & 0.9882 & 1.0000 & 0.9882 & 0.8347 & 0.8645 & 0.8747 & 0.8645 & 0.5588 & 0.5787 & 0.5855 & 0.5787 & 0.2862 & 0.2965 & 0.3000 & 0.2965 \\ 0.8999 & 0.9541 & 0.9882 & 1.0000 & 0.7872 & 0.8347 & 0.8645 & 0.8747 & 0.5270 & 0.5588 & 0.5787 & 0.5855 & 0.2700 & 0.2862 & 0.2965 & 0.3000 \\ 0.8747 & 0.8645 & 0.8347 & 0.7872 & 1.0000 & 0.9882 & 0.9541 & 0.8999 & 0.8747 & 0.8645 & 0.8347 & 0.7872 & 0.5855 & 0.5787 & 0.5588 & 0.5270 \\ 0.8645 & 0.8747 & 0.8645 & 0.8347 & 0.9882 & 1.0000 & 0.9882 & 0.9541 & 0.8645 & 0.8747 & 0.8645 & 0.8347 & 0.5787 & 0.5855 & 0.5787 & 0.5588 \\ 0.8347 & 0.8645 & 0.8747 & 0.8645 & 0.9541 & 0.9882 & 1.0000 & 0.9882 & 0.8347 & 0.8645 & 0.8747 & 0.8645 & 0.5588 & 0.5787 & 0.5855 & 0.5787 \\ 0.7872 & 0.8347 & 0.8645 & 0.8747 & 0.8999 & 0.9541 & 0.9882 & 1.0000 & 0.7872 & 0.8347 & 0.8645 & 0.8747 & 0.5270 & 0.5588 & 0.5787 & 0.5855 \\ 0.5855 & 0.5787 & 0.5588 & 0.5270 & 0.8747 & 0.8645 & 0.8347 & 0.7872 & 1.0000 & 0.9882 & 0.9541 & 0.8999 & 0.8747 & 0.8645 & 0.8347 & 0.7872 \\ 0.5787 & 0.5855 & 0.5787 & 0.5588 & 0.8645 & 0.8747 & 0.8645 & 0.8347 & 0.9882 & 1.0000 & 0.9882 & 0.9541 & 0.8645 & 0.8747 & 0.8645 & 0.8347 \\ 0.5588 & 0.5787 & 0.5855 & 0.5787 & 0.8347 & 0.8645 & 0.8747 & 0.8645 & 0.9541 & 0.9882 & 1.0000 & 0.9882 & 0.8347 & 0.8645 & 0.8747 & 0.8645 \\ 0.5270 & 0.5588 & 0.5787 & 0.5855 & 0.7872 & 0.8347 & 0.8645 & 0.8747 & 0.8999 & 0.9541 & 0.9882 & 1.0000 & 0.7872 & 0.8347 & 0.8645 & 0.8747 \\ 0.3000 & 0.2965 & 0.2862 & 0.2700 & 0.5855 & 0.5787 & 0.5588 & 0.5270 & 0.8747 & 0.8645 & 0.8347 & 0.7872 & 1.0000 & 0.9882 & 0.9541 & 0.8999 \\ 0.2965 & 0.3000 & 0.2965 & 0.2862 & 0.5787 & 0.5855 & 0.5787 & 0.5588 & 0.8645 & 0.8747 & 0.8645 & 0.8347 & 0.9882 & 1.0000 & 0.9882 & 0.9541 \\ 0.2862 & 0.2965 & 0.3000 & 0.2965 & 0.5588 & 0.5787 & 0.5855 & 0.5787 & 0.8347 & 0.8645 & 0.8747 & 0.8645 & 0.9541 & 0.9882 & 1.0000 & 0.9882 \\ 0.2700 & 0.2862 & 0.2965 & 0.3000 & 0.5270 & 0.5588 & 0.5787 & 0.5855 & 0.7872 & 0.8347 & 0.8645 & 0.8747 & 0.8999 & 0.9541 & 0.9882 & 1.0000 \end{pmatrix}]$

Table B.5.2-4: MIMO correlation matrices for low correlation

1x2 case	$R_{low} = \mathbf{I}_2$
1x4 case	$R_{low} = \mathbf{I}_4$
2x2 case	$R_{low} = \mathbf{I}_4$
2x4 case	$R_{low} = \mathbf{I}_8$
4x4 case	$R_{low} = \mathbf{I}_{16}$

In Table B.5.2-4, $\mathbf{I}_d$ is a $d \times d$ identity matrix.

NOTE: For completeness, the 1x2 cases were defined for high, medium and low correlation but for Rel-8 onwards for 1Tx, performance requirements exist only for low correlation.

ONEPLUS - EX. 1027

Annex C (normative): Characteristics of the interfering signals

The interfering signal shall be a PUSCH containing data and reference symbols. Normal cyclic prefix is used. The data content shall be uncorrelated to the wanted signal and modulated according to clause 5 of TS36.211. Mapping of PUSCH modulation to receiver requirement are specified in table C-1.1.

Table C-1: Modulation of the interfering signal

Receiver requirement	Modulation
In-channel selectivity	16QAM
Adjacent channel selectivity and narrow-band blocking	QPSK
Blocking	QPSK
Receiver intermodulation	QPSK

ONEPLUS - EX. 1027

Annex D (normative): Environmental requirements for the BS equipment

The BS equipment shall fulfil all the requirements in the full range of environmental conditions for the relevant environmental class from the relevant IEC specifications listed below

60 721-3-3 "Stationary use at weather protected locations" [13]

60 721-3-4 "Stationary use at non weather protected locations" [14]

Normally it should be sufficient for all tests to be conducted using normal test conditions except where otherwise stated. For guidance on the use of test conditions to be used in order to show compliance refer to TS 36.141.

ONEPLUS - EX. 1027

Annex E (normative): Error Vector Magnitude

E.1 Reference point for measurement

The EVM shall be measured at the point after the FFT and a zero-forcing (ZF) equalizer in the receiver, as depicted in Figure E.1-1 below.

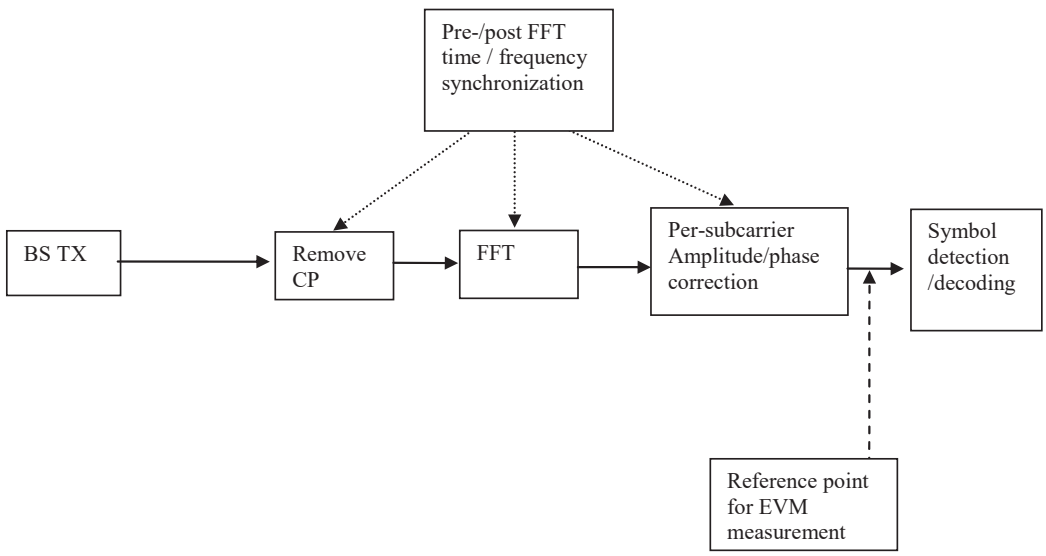

Figure E.1-1: Reference point for EVM measurement

E.2 Basic unit of measurement

The basic unit of EVM measurement is defined over one subframe (1ms) in the time domain and N_{BW}^{RB} subcarriers (180kHz) in the frequency domain:

$$EVM = \sqrt{\frac{\sum_{t \in T} \sum_{f \in F(t)} \left| Z'(t,f) - I(t,f) \right|^2}{\sum_{t \in T} \sum_{f \in F(t)} \left| I(t,f) \right|^2}}$$

where

T is the set of symbols with the considered modulation scheme being active within the subframe,

$F(t)$ is the set of subcarriers within the $N_{\mathrm{BW}}^{\mathrm{RB}}$ subcarriers with the considered modulation scheme being active in symbol t,

$I(t,f)$ is the ideal signal reconstructed by the measurement equipment in accordance with relevant Tx models,

$Z'(t,f)$ is the modified signal under test defined in E.3.

ONEPLUS - EX. 1027

Note: Although the basic unit of measurement is one subframe, the equalizer is calculated over 10 subframe measurement periods to reduce the impact of noise in the reference symbols. The boundaries of the 10 subframe measurement periods need not be aligned with radio frame boundaries.

E.3 Modified signal under test

Implicit in the definition of EVM is an assumption that the receiver is able to compensate a number of transmitter impairments. The signal under test is equalised and decoded according to:

$$Z'(t,f) = \frac{FFT\left\{z(v-\Delta\tilde{t})\cdot e^{-j2\pi\Delta\tilde{f}v}\right\}e^{j2\pi f\Delta\tilde{t}}}{\tilde{a}(f)\cdot e^{j\tilde{\varphi}(f)}}$$

where

$z(v)$ is the time domain samples of the signal under test.

$\Delta\tilde{t}$ is the sample timing difference between the FFT processing window in relation to nominal timing of the ideal signal. Note that two timing offsets are determined, the corresponding EVM is measured and the maximum used as described in E.7.

$\Delta\tilde{f}$ is the RF frequency offset.

$\tilde{\varphi}(f)$ is the phase response of the TX chain.

$\tilde{a}(f)$ is the amplitude response of the TX chain.

E.4 Estimation of frequency offset

The observation period for determining the frequency offset $\Delta\tilde{f}$ shall be 1 ms.

E.5 Estimation of time offset

The observation period for determining the sample timing difference $\Delta\tilde{t}$ shall be 1 ms.

In the following $\Delta\tilde{c}$ represents the middle sample of the EVM window of length W (defined in E.5.1) or the last sample of the first window half if W is even.

$\Delta\tilde{c}$ is estimated so that the EVM window of length W is centred on the measured cyclic prefix of the considered OFDM symbol. To minimize the estimation error the timing shall be based on the primary synchronization signal and reference signals. To limit time distortion of any transmit filter the reference signals in the 1 outer RBs are not taken into account in the timing estimation

Two values for $\Delta\tilde{t}$ are determined:

$\Delta\tilde{t}_l = \Delta\tilde{c} + \alpha - \left\lfloor \frac{W}{2} \right\rfloor$ and

ONEPLUS - EX. 1027

$\Delta\widetilde{t}_h = \Delta\widetilde{c} + \left\lfloor \frac{W}{2} \right\rfloor$ where $\alpha = 0$ if W is odd and $\alpha = 1$ if W is even.

When the cyclic prefix length varies from symbol to symbol (e.g. time multiplexed MBMS and unicast) then T shall be further restricted to the subset of symbols with the considered modulation scheme being active and with the considered cyclic prefix length type.

E.5.1 Window length

Table E.5.1-1 below specifies EVM window length (W) for normal CP, the cyclic prefix length N_{cp} is 160 for symbols 0 and 144 for symbols 1-6.

Table E.5.1-2 specifies the EVM window length (W) for extended CP, the cyclic prefix length N_{cp} is 512.

Table E.5.1-1 EVM window length for normal CP

Channel Bandwidth MHz	FFT size		Cyclic prefix length for symbols 0 in FFT samples	Cyclic prefix length for symbols 1-6 in FFT samples	EVM window length *W*	Ratio of *W* to total CP for symbols 1-6* [%]
1.4	128		10	9	5	55.6
3	256		20	18	12	66.7
5	512		40	36	32	88.9
10	1024		80	72	66	91.7
15	1536		120	108	102	94.4
20	2048		160	144	136	94.4
* Note: These percentages are informative and apply to symbols 1 through 6. Symbol 0 has a longer CP and therefore a lower percentage.						

Table E.5.1-2 EVM window length for extended CP

Channel Bandwidth [MHz]	FFT size	Cyclic prefix in FFT samples	EVM window length *W*	Ratio of *W* to total CP * [%]
1.4	128	32	28	87.5
3	256	64	58	90.6
5	512	128	124	96.9
10	1024	256	250	97.7
15	1536	384	378	98.4
20	2048	512	504	98.4
* Note: These percentages are informative.				

E.6 Estimation of TX chain amplitude and frequency response parameters

The equalizer coefficients $\widetilde{a}(f)$ and $\widetilde{\varphi}(f)$ are determined as follows:

1. Calculate the complex ratios (amplitude and phase) of the post-FFT acquired signal $Z'(t,f)$ and the post-FFT Ideal signal $I_2(t,f)$, for each reference symbol, over 10 subframes. This process creates a set of complex ratios:

$$a(t,f).e^{j\varphi(t,f)} = \frac{Z'(t,f)}{I_2(t,f)}$$

ONEPLUS - EX. 1027

Where the post-FFT Ideal signal $I_2(t,f)$ is constructed by the measuring equipment according to the relevant TX specifications, using the following parameters: restricted content: i.e. nominal Reference Symbols and the Primary Synchronisation Channel, (all other modulation symbols are set to 0 V), nominal carrier frequency, nominal amplitude and phase for each applicable subcarrier, nominal timing.

2. Perform time averaging at each reference signal subcarrier of the complex ratios, the time-averaging length is 10 subframes. Prior to the averaging of the phases $\varphi(t_i, f)$ an unwrap operation must be performed according to the following definition: The unwrap operation corrects the radian phase angles of $\varphi(t_i, f)$ by adding multiples of 2*PI when absolute phase jumps between consecutive time instances t_i are greater then or equal to the jump tolerance of PI radians. This process creates an average amplitude and phase for each reference signal subcarrier (i.e. every third subcarrier with the exception of the reference subcarrier spacing across the DC subcarrier).

$$a(f) = \frac{\sum_{i=1}^{N} a(t_i, f)}{N}$$

$$\varphi(f) = \frac{\sum_{i=1}^{N} \varphi(t_i, f)}{N}$$

Where N is the number of reference symbol time-domain locations t_i from Z'(f,t) for each reference signal subcarrier f.

3. The equalizer coefficients for amplitude and phase $\hat{a}(f)$ and $\hat{\varphi}(f)$ at the reference signal subcarriers are obtained by computing the moving average in the frequency domain of the time-averaged reference signal subcarriers, i.e. every third subcarrier. The moving average window size is 19. For reference subcarriers at or near the edge of the channel the window size is reduced accordingly as per figure E.6-1.

4. Perform linear interpolation from the equalizer coefficients $\hat{a}(f)$ and $\hat{\varphi}(f)$ to compute coefficients $\tilde{a}(f)$, $\tilde{\varphi}(f)$ for each subcarrier.

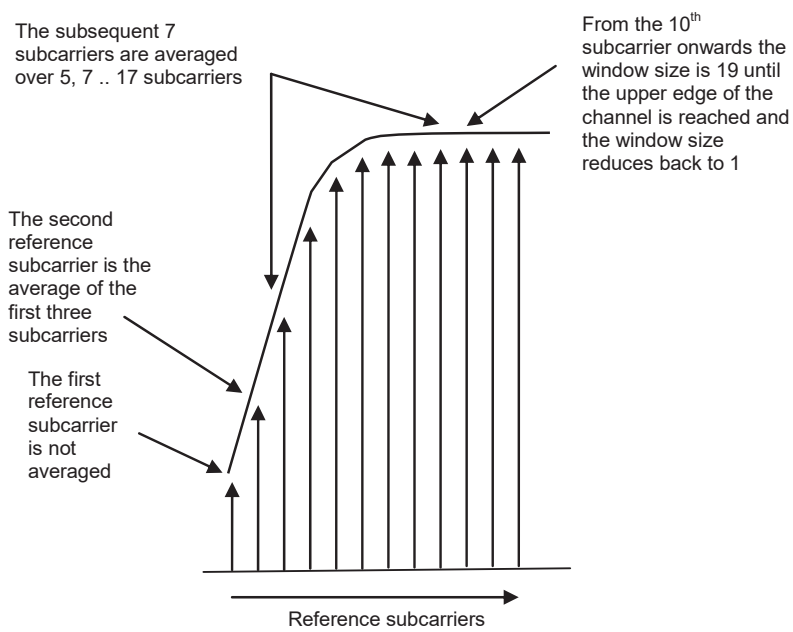

Figure E.6-1: Reference subcarrier smoothing in the frequency domain

ONEPLUS - EX. 1027

E.7 Averaged EVM

EVM is averaged over all allocated downlink resource blocks with the considered modulation scheme in the frequency domain, and a minimum of 10 downlink subframes:

For FDD the averaging in the time domain equals the 10 subframe duration of the 10 subframes measurement period from the equalizer estimation step.

For TDD the averaging in the time domain can be calculated from subframes of different frames and should have a minimum of 10 subframes averaging length. TDD special fields (DwPTS and GP) are not included in the averaging.

$$\overline{EVM_{frame}} = \sqrt{\frac{1}{\sum_{i=1}^{N_{dl}} Ni} \sum_{i=1}^{N_{dl}} \sum_{j=1}^{Ni} EVM_{i,j}^2}$$

Where Ni is the number of resource blocks with the considered modulation scheme in subframe i and N_{dl} is the number of allocated downlink subframes in one frame.

The EVM requirements shall be tested against the maximum of the RMS average at the window W extremities of the EVM measurements:

Thus $\overline{\mathrm{EVM}}_{\mathrm{frame},1}$ is calculated using $\Delta\tilde{t} = \Delta\tilde{t}_l$ in the expressions above and $\overline{\mathrm{EVM}}_{frame,h}$ is calculated using $\Delta\tilde{t} = \Delta\tilde{t}_h$ in the $\overline{EVM_{frame}}$ calculation.

Thus we get:

$$EVM_{frame} = \max(\overline{\mathrm{EVM}}_{\mathrm{frame},1}, \overline{\mathrm{EVM}}_{frame,h})$$

The averaged EVM with the minimum averaging length of at least 10 subframes is then achieved by further averaging of the EVM_{frame} results

$$\overline{EVM} = \sqrt{\frac{1}{N_{frame}} \sum_{k=1}^{N_{frame}} EVM_{frame,k}^2}\ ,\ N_{frame} = \left\lceil \frac{10}{N_{dl}} \right\rceil$$

ONEPLUS - EX. 1027

Annex F (Informative): Unwanted emission requirements for multi-carrier BS

F.1 General

In subclause 6.6, unwanted emission requirements for single carrier or multi-carrier BS are specified. This multi-carrier BS corresponds to a multi-carrier BS for E-UTRA, or a BS supporting intra-band contiguous CA. The following two pragmatic scenarios are considered in this annex:

- multi-carrier BS of different E-UTRA channel bandwidths, covering all scenarios except the channel bandwidth of the outermost carrier less than 5 MHz
- multi-carrier BS of E-UTRA and UTRA, covering all scenarios except the channel bandwidth of the outermost carrier less than 5 MHz.

All scenarios for channel bandwidths of the outermost carrier less than 5 MHz are for further study. The guidelines below assumes that the power spectral density of the multiple carriers is the same. All other combinations of multiple carriers are ffs.

Note 1: Further information and analysis for these scenarios can be found in TR 36.942 [9].

F.2 Multi-carrier BS of different E-UTRA channel bandwidths

For a multi-carrier E-UTRA BS transmitting a group of carriers of different channel bandwidths, the channel bandwidth of the outermost carriers (≥5 MHz) should be considered for ACLR and Operating band unwanted emission requirements. That is, the corresponding requirements for the channel bandwidth of each of the outermost carriers should be applied at the respective side of the group of transmitted carriers.

F.3 Multi-carrier BS of E-UTRA and UTRA

For a multi-carrier BS transmitting a group of carriers of E-UTRA and UTRA, the RAT being used on the outermost carriers (≥5 MHz) should be considered for ACLR and Operating band unwanted emission requirements. That is, the corresponding requirements for the RAT being used on each of the outermost carriers should be applied at the respective side of the group of transmitted carriers.

ONEPLUS - EX. 1027

Annex G (Informative): Regional requirement for protection of DTT

The European Communications Committee (ECC) has adopted the "ECC Decision on harmonised conditions for Mobile/Fixed Communications Networks operating in the band 790-862 MHz" [12] applicable for BS operating in band 20. The decision defines a requirement for "Out-of-block BEM baseline requirements for 'mobile/fixed communications network' (MFCN) base stations within the spectrum allocated to the broadcasting (DTT) service", where three different cases A, B, and C for protecting broadcasting DTT are defined. These cases can be applied on a per-channel and/or per-region basis, i.e. for the same channel different cases can be applied in different geographic areas (e.g. area related to DTT coverage) and different cases can be applied to different channels in the same geographic area.

For band 20, compliance with the regulatory requirements in Europe referenced above can be assessed based on the manufacturer's declaration of $P_{EM,N}$ specified in subclause 6.6.3.3, together with the deployment characteristics. Maximum output Power in 10 MHz (P_{10MHz}) is also declared by the manufacturer. The parameters G_{ant} and N_{ant} are deployment specific parameters related to the deployment of the BS, where G_{ant} is the antenna gain and N_{ant} is the number of antennas.

For each channel (N) the EIRP level is calculated using: $P_{EIRP,N} = P_{EM,N} + G_{ant} + 10*\log(N_{ant})$. The regulatory requirement in [12] limits the EIRP level to the Maximum level in Table G-1 for the protection case(s) defined in the regulation.

Table G-1: EIRP limits for protection of broadcasting (DTT) service

Case	Measurement filter centre frequency	Condition on BS maximum aggregate EIRP / 10 MHz, P_{EIRP_10MHz} (Note)	Maximum Level $P_{EIRP,N,MAX}$	Measurement Bandwidth
A: for DTT frequencies where broadcasting is protected	N*8 + 306 MHz, 21 ≤ N ≤ 60	$P_{EIRP_10MHz} \geq 59$ dBm	0 dBm	8 MHz
	N*8 + 306 MHz, 21 ≤ N ≤ 60	$36 \leq P_{EIRP_10MHz} < 59$ dBm	$P_{EIRP_10MHz} - 59$ dBm	8 MHz
	N*8 + 306 MHz, 21 ≤ N ≤ 60	$P_{EIRP_10MHz} < 36$ dBm	-23 dBm	8 MHz
B: for DTT frequencies where broadcasting is subject to an intermediate level of protection	N*8 + 306 MHz, 21 ≤ N ≤ 60	$P_{EIRP_10MHz} \geq 59$ dBm	10 dBm	8 MHz
	N*8 + 306 MHz, 21 ≤ N ≤ 60	$36 \leq P_{EIRP_10MHz} < 59$ dBm	$P_{EIRP_10MHz} - 49$ dBm	8 MHz
	N*8 + 306 MHz, 21 ≤ N ≤ 60	$P_{EIRP_10MHz} < 36$ dBm	-13 dBm	8 MHz
C: for DTT frequencies where broadcasting is not protected	N*8 + 306 MHz, 21 ≤ N ≤ 60	N.A.	22 dBm	8 MHz
NOTE: P_{EIRP_10MHz} (dBm) is defined by the expression $P_{EIRP_10MHz} = P_{10MHz} + G_{ant} + 10*\log10(N_{ant})$				

ONEPLUS - EX. 1027

Annex H (Informative): Change history

Change history							
Date	**TSG #**	**TSG Doc.**	**CR**	**Rev**	**Subject/Comment**	**Old**	**New**
2007-08	RAN4 #44	R4-071465			TS skeleton created from 3GPP TS template.		0.0.1
2007-10	RAN4 #44bis	R4-071709			Agreed TP in RAN4#44: **R4-071466**, "TP Common definitions for TS 36.104"	0.0.1	0.0.2
2007-10	RAN4 #44bis	R4-071782			Agreed TP in RAN4#44bis: **R4-071681**, "TP 36.104: General (6.1)". **R4-071740**, "E-UTRA FDD BS general receiver requirements".	0.0.2	0.1.0
2007-11	RAN4 #45	R4-072157			Agreed TP in RAN4#45: **R4-071854**, "E-UTRA FDD BS Reference sensitivity level" **R4-071858**, "E-UTRA FDD BS Receiver intermodulation" **R4-071859**, "E-UTRA FDD BS Fixed Reference Channels" **R4-071860**, "E-UTRA FDD BS In-channel selectivity" **R4-071964**, "TS 36.104: TP for Unwanted emissions (6.6)" **R4-071968**, "TS 36.104: TP for Tx Intermodulation (6.7)" **R4-071969**, "TS 36.104: TP for Rx spurious emissions (7.6)" **R4-072123**, "TS 36.104: TP for General (4)" **R4-072124**, "TS 36.104: TP for Operating band unwanted emissions (6.6.3)" **R4-072126**, "E-UTRA FDD BS Dynamic range" **R4-072127**, "E-UTRA FDD BS Adjacent channel selectivity and narrow band blocking" **R4-072128**, "TS 36.104: TP for Propagation conditions for BS (Annex B)" **R4-072130**, "E-UTRA FDD BS Blocking" **R4-072155**, "TS 36.104: TP for Occupied bandwidth (6.6.1)" **R4-072162**, "TP to 36.104 on performance requirements" **R4-072177**, "TS 36.104: TP for Frequency bands and channel arrangement (5)" **R4-072185**, "TS 36.104: TP for ACLR (6.6.2)" **R4-072205**, " TS 36.104: TP for Transmitter spurious emissions (6.6.4)"	0.1.0	0.2.0
2007-11	RAN# 38	RP-070975			Presentation to TSG	0.2.0	1.0.0
2007-11					Approved version at TSG RAN #38	1.0.0	8.0.0
2008-03	RAN# 39	RP-080123	3	2	Combined updates of E-UTRA BS RF requirements	8.0.0	8.1.0
2008-05	RAN# 40	RP-080325	4		Updates of E-UTRA BS requirements	8.1.0	8.2.0
2008-09	RAN# 41	RP-080640	7	2	LTE BS ON-OFF Mask	8.2.0	8.3.0
2008-09	RAN# 41	RP-080640	8		Removal of brackets for LTE BS RF requirements	8.2.0	8.3.0
2008-09	RAN# 41	RP-080640	14	1	Unwanted emission requirements for multi-carrier BS	8.2.0	8.3.0
2008-09	RAN# 41	RP-080640	15	2	Clarification of emission requirements for co-existence	8.2.0	8.3.0
2008-09	RAN# 41	RP-080640	17	1	eNB performance requirements for UL timing adjustment	8.2.0	8.3.0
2008-09	RAN# 41	RP-080640	18		eNodeB performance requirements for PUCCH format 2	8.2.0	8.3.0
2008-09	RAN# 41	RP-080640	21		eNB performance requirements for highs speed train	8.2.0	8.3.0
2008-09	RAN# 41	RP-080640	23		Additional band 17	8.2.0	8.3.0
2008-09	RAN# 41	RP-080641	5	2	Updates of Fixed Reference Channels	8.2.0	8.3.0
2008-09	RAN# 41	RP-080641	9		Removal of brackets and notes related to test requirements	8.2.0	8.3.0
2008-09	RAN# 41	RP-080641	10		High Speed Train scenarios modification	8.2.0	8.3.0
2008-09	RAN# 41	RP-080641	12		Several modifications for TS36.104	8.2.0	8.3.0
2008-09	RAN#	RP-080641	13		Removal of notes on frequency offset	8.2.0	8.3.0

ONEPLUS - EX. 1027

	41						
2008-09	RAN# 41	RP-080641	16	1	LTE Abbreviations update	8.2.0	8.3.0
2008-09	RAN# 41	RP-080641	19	1	eNodeB performance requirements for PUSCH and RF requirements	8.2.0	8.3.0
2008-09	RAN# 41	RP-080641	20		Clarification on High Speed train model in 36.104	8.2.0	8.3.0
2008-09	RAN# 41	RP-080641	22	1	Clarification of ACLR for multi-carrier E-UTRA BS	8.2.0	8.3.0
2008-12	RAN #42	RP-080914	37	1	Editorial updates of TS 36.104	8.3.0	8.4.0
2008-12	RAN #42	RP-080915	30		Correction to the figure with the transmission bandwidth configuration	8.3.0	8.4.0
2008-12	RAN #42	RP-080916	77		Modification to EARFCN	8.3.0	8.4.0
2008-12	RAN #42	RP-080917	38	1	Alignement of clause 5 betweeb E-UTRA specs	8.3.0	8.4.0
2008-12	RAN #42	RP-080918	26		Correction of output power dynamics requirement	8.3.0	8.4.0
2008-12	RAN #42	RP-080918	27		LTE BS ON-OFF Mask	8.3.0	8.4.0
2008-12	RAN #42	RP-080918	28		Correction to RE power control dynamic range	8.3.0	8.4.0
2008-12	RAN #42	RP-080919	29	1	BS RF requirements for Band 17	8.3.0	8.4.0
2008-12	RAN #42	RP-080920	41		Update of total dynamic range limits	8.3.0	8.4.0
2008-12	RAN #42	RP-080921	39	1	Update of TDD-FDD coexistance requirements	8.3.0	8.4.0
2008-12	RAN #42	RP-080922	33	1	eNB performance requirements for Multi User PUCCH	8.3.0	8.4.0
2008-12	RAN #42	RP-080922	42		PRACH demodulation requirements update	8.3.0	8.4.0
2008-12	RAN #42	RP-080922	25	1	Updates of Fized Reference Channels and requirements for UL timing adjustment and PUCCH format 2	8.3.0	8.4.0
2008-12	RAN #42	RP-080922	44		eNB performance requirements for HARQ-ACK multiplexed on PUSCH	8.3.0	8.4.0
2008-12	RAN #42	RP-080923	43		General updates to Clause 8 and appendix A	8.3.0	8.4.0
2008-12	RAN #42	RP-080925	24		LTE TDD Update for Annex E of 36.104	8.3.0	8.4.0
2008-12	RAN #42	RP-080927	32	1	Clarification of eNB HST propagation conditions	8.3.0	8.4.0
2008-12	RAN #42	RP-080927	31		Corrections of eNB performance requirements for high speed train	8.3.0	8.4.0
2009-03	RAN #43	RP-090173	53	1	Clarification of EARFCN	8.4.0	8.5.0
2009-03	RAN #43	RP-090175	60	1	Regional requirement on maximum rated power for Band 34	8.4.0	8.5.0
2009-03	RAN #43	RP-090176	45		Correction to additional requirements for operating band unwanted emissions	8.4.0	8.5.0
2009-03	RAN #43	RP-090176	48		Clarification of PHS band including the future plan	8.4.0	8.5.0
2009-03	RAN #43	RP-090176	49		Unsynchronized TDD coexistence requirements	8.4.0	8.5.0
2009-03	RAN #43	RP-090176	54		eNB transmitter transient period	8.4.0	8.5.0
2009-03	RAN #43	RP-090176	56	1	eNB ACS frequency offset	8.4.0	8.5.0
2009-03	RAN #43	RP-090176	57		Correction to unwanted emission limit for 3MHz(E-UTRA bands < 1GHz) for Category A	8.4.0	8.5.0
2009-03	RAN #43	RP-090177	46		Modifications on UL timing adjustment test case	8.4.0	8.5.0
2009-03	RAN #43	RP-090177	47	1	Modifications on PUSCH high speed train test case	8.4.0	8.5.0
2009-03	RAN #43	RP-090177	50		Clarification on PUCCH ACK/NAK repetitions for BS performance tests	8.4.0	8.5.0
2009-03	RAN #43	RP-090177	52		PUSCH ACK/NAK simulation assumptions finalization for simulations with implementation margins	8.4.0	8.5.0
2009-03	RAN #43	RP-090177	59		HARQ-ACK multiplexed on PUSCH performance requirement results	8.4.0	8.5.0
2009-05	RAN #44	RP-090544	63		Clarification of requirements for multicarrier BS. (Technically Endorsed CR in R4-50bis - R4-091375)	8.5.0	8.6.0
2009-05	RAN #44	RP-090545	62		CR ACS frequency offset. (Technically Endorsed CR in R4-	8.5.0	8.6.0

ONEPLUS - EX. 1027

					50bis - R4-091329)		
2009-05	RAN #44	RP-090545	67		Correction to DL RS power	8.5.0	8.6.0
2009-05	RAN #44	RP-090545	69		Correction to Receiver Dynamic Range minimum requirements	8.5.0	8.6.0
2009-05	RAN #44	RP-090545	64		UL timing adjustment performance requirement clarifications. (Technically Endorsed CR in R4-50bis - R4-091437)	8.5.0	8.6.0
2009-05	RAN #44	RP-090559	61		Introduction of Extended LTE800 requirements. (Technically Endorsed CR in R4-50bis - R4-091060)	8.6.0	9.0.0
2009-09	RAN #45	RP-090953	71		Clarification of the UL timing adjustment performance determination	9.0.0	9.1.0
2009-09	RAN #45	RP-090953	73		Corrections to E-UTRA Rx requirements	9.0.0	9.1.0
2009-09	RAN #45	RP-090953	78		Clarifications on testing UL timing adjustment requirements	9.0.0	9.1.0
2009-09	RAN #45	RP-090953	90		Correction on Table A.3-1 FRC parameters for performance requirements (QPSK 1/3) of Annex 3	9.0.0	9.1.0
2009-09	RAN #45	RP-090954	86	2	LTE operating band unwanted emissions revision	9.0.0	9.1.0
2009-09	RAN #45	RP-090826	74		Correction of spurious emission requirements for LTE800	9.0.0	9.1.0
2009-12	RP-46	RP-091286	093		Introduction of Extended LTE1500 requirements for TS36.104 (Technically endorsed at RAN 4 52bis in R4-093633)	9.1.0	9.2.0
2009-12	RP-46	RP-091265	095		Correction to ICS requirement (Technically endorsed at RAN 4 52bis in R4-093639)	9.1.0	9.2.0
2009-12	RP-46	RP-091265	097		CR eNB FDD EVM (Technically endorsed at RAN 4 52bis in R4-093713)	9.1.0	9.2.0
2009-12	RP-46	RP-091265	099		Correction on terminology for noise bandwidth (Technically endorsed at RAN 4 52bis in R4-093740)	9.1.0	9.2.0
2009-12	RP-46	RP-091266	101		LTE operating band unwanted emissions correction (Technically endorsed at RAN 4 52bis in R4-093801)	9.1.0	9.2.0
2009-12	RP-46	RP-091266	103		Multi-path fading propagation conditions reference correction (Technically endorsed at RAN 4 52bis in R4-093927)	9.1.0	9.2.0
2009-12	RP-46	RP-091266	105		Clarification on Spurious emissions limits for BS co-existed with another BS (Technically endorsed at RAN 4 52bis in R4-094011)	9.1.0	9.2.0
2009-12	RP-46	RP-091266	106		Correction to the transmitter intermodulation (Technically endorsed at RAN 4 52bis in R4-094084)	9.1.0	9.2.0
2009-12	RP-46	RP-091270	109	1	Clarification on PRACH False alarm probability	9.1.0	9.2.0
2009-12	RP-46	RP-091295	110	1	E-UTRA BS classification	9.1.0	9.2.0
2009-12	RP-46	RP-091295	111	1	Home eNode B maximum output power	9.1.0	9.2.0
2009-12	RP-46	RP-091295	112	1	Home eNode B in-channel selectivity requirement	9.1.0	9.2.0
2009-12	RP-46	RP-091295	113	1	Home eNode B receiver intermodulation requirement	9.1.0	9.2.0
2009-12	RP-46	RP-091293	114	2	Demodulation requirements of Pico NodeB	9.1.0	9.2.0
2009-12	RP-46	RP-091269	116		UL Timing Adjustment test clarifications	9.1.0	9.2.0
2009-12	RP-46	RP-091265	118		Corrections on frequency range of unwanted emissions requirements	9.1.0	9.2.0
2009-12	RP-46	RP-091276	122		Testing in case of Rx diversity, Tx diversity and MIMO	9.1.0	9.2.0
2009-12	RP-46	RP-091265	124		Table reference correction	9.1.0	9.2.0
2009-12	RP-46	RP-091295	125	1	Home eNode B ACLR requirement	9.1.0	9.2.0
2009-12	RP-46	RP-091295	126	1	Home eNode B ACS and narrow band blocking requirement	9.1.0	9.2.0
2009-12	RP-46	RP-091295	127	1	Home eNode B Blocking requirement	9.1.0	9.2.0
2009-12	RP-46	RP-091294	128	1	Home eNode B dynamic range requirement	9.1.0	9.2.0
2009-12	RP-46	RP-091294	129	1	Home eNode B frequency error requirement	9.1.0	9.2.0
2009-12	RP-46	RP-091294	130	2	Home eNode B performance requirement	9.1.0	9.2.0
2009-12	RP-46	RP-091294	131	1	Home eNode B operating band unwanted emissions requirement	9.1.0	9.2.0
2009-12	RP-46	RP-091294	132	1	Home eNode B reference sensitivity level requirement	9.1.0	9.2.0
2009-12	RP-46	RP-091294	133	2	Home eNode B spurious emission requirement	9.1.0	9.2.0
2009-12	RP-46	RP-091284	135	1	Inclusion of Band 20 BS RF parameters	9.1.0	9.2.0
2009-12	RP-46	RP-091265	139		Corrections on blocking performance requirement for Band 17	9.1.0	9.2.0
2009-12	RP-46	RP-091294	140		CR-Protection of Adjacent Channels Owned by Other Operators	9.1.0	9.2.0
2009-12	RP-46	RP-091293	141		Introduction of LTE Pico NodeB class	9.1.0	9.2.0
2010-03	RP-47	RP-100252	155		Correction of the frequency range for unwanted emmissions limits (cat-B/option 2/BW 3MHz)	9.2.0	9.3.0
2010-03	RP-47	RP-100252	152		Correction of Band 4 and 10 co-existence requirement	9.2.0	9.3.0
2010-03	RP-47	RP-100262	160		Adding missing references	9.2.0	9.3.0
2010-03	RP-47	RP-100275	145	1	Corrections of operating band unwanted emissions for Local Area BS	9.2.0	9.3.0
2010-03	RP-47	RP-100275	146	1	Editorial correction in TS36.104 for Pico NodeB	9.2.0	9.3.0
2010-03	RP-47	RP-100263	153		Correction of DTT protection requirement	9.2.0	9.3.0

ONEPLUS - EX. 1027

2010-03	RP-47	RP-100266	144		Corrections of operating band unwanted emissions for Home BS	9.2.0	9.3.0
2010-03	RP-47	RP-100266	156		Corrections on Home BS operating band unwanted emission limits	9.2.0	9.3.0
2010-03	RP-47	RP-100266	147		Corrections of additional spurious emissions and blocking requirements for HeNB	9.2.0	9.3.0
2010-03	RP-47	RP-100266	150		Corrections on Home BS Output Power for Adjacent Channel Protection	9.2.0	9.3.0
2010-03	RP-47	RP-100274	157		Requirements for HARQ-ACK multiplexed on PUSCH for E-UTRA LA and Home BS	9.2.0	9.3.0
2010-03	RP-47	RP-100274	158		CQI missed detection requirements for PUCCH format 2 for E-UTRA LA and Home BS	9.2.0	9.3.0
2010-03	RP-47	RP-100274	149	1	Corrections to the receiver intermodulation requirements	9.2.0	9.3.0
2010-06	RP-48	RP-100621	164		Clarification on narrowband blocking requirements	9.3.0	9.4.0
2010-06	RP-48	RP-100621	162		Spurious emissions limits and blocking requirements for coexistence with CDMA850	9.3.0	9.4.0
2010-06	RP-48	RP-100621	167	1	Correction to the FRC for PUSCH 1.4M requirements	9.3.0	9.4.0
2010-06	RP-48	RP-100625	172		Clarification of applicability of requirements for multi-carrier BS	9.3.0	9.4.0
2010-06	RP-48	RP-100631	168		Co-existence with services in adjacent frequency bands	9.3.0	9.4.0
2010-09	RP-49	RP-100920	178		UL Timing Adjustment: Stationary UE propagation channel clarification	9.4.0	9.5.0
2010-09	RP-49	RP-100927	173		CR LTE_TDD_2600_US spectrum band definition additions to TS 36.104	9.5.0	10.0.0
2010-12	RP-50	RP-101327	194		Band 12 channel arrangement correction on 36.104	10.0.0	10.1.0
2010-12	RP-50	RP-101328	190		PUCCH format 2 performance requirements definition clarification	10.0.0	10.1.0
2010-12	RP-50	RP-101328	203		Correction on multi user PUCCH test	10.0.0	10.1.0
2010-12	RP-50	RP-101342	183		Equaliser coefficient derivation for EVM	10.0.0	10.1.0
2010-12	RP-50	RP-101342	186		Corrections on table reference for Local Area BS co-located with another BS	10.0.0	10.1.0
2010-12	RP-50	RP-101342	200		Correction of applicability of requirements	10.0.0	10.1.0
2010-12	RP-50	RP-101356	181	3	CR UMTS/LTE-3500 TDD spectrum band definition additions for BS to TS 36.104	10.0.0	10.1.0
2010-12	RP-50	RP-101358	191		Base Station Rated Output Power with up to 8 Transmit Antennas	10.0.0	10.1.0
2010-12	RP-50	RP-101359	204		Introduction of Carrier Aggregation for LTE in TS 36.104	10.0.0	10.1.0
2011-04	RP-51	RP-110360	179	4	Introduction of L-Band in TS 36.104	10.1.0	10.2.0
2011-04	RP-51	RP-110357	210	2	Band 42 and 43 co-existence for UMTS/LTE 3500 (TDD) for TS 36.104	10.1.0	10.2.0
2011-04	RP-51	RP-110344	212	-	Operating band unwanted emissions for Band 1, 33 and 34 (TS 36.104)	10.1.0	10.2.0
2011-06	RP-52	RP-110794	218		Modifications to Band 3 to allow LTE Band 3 operation in Japan (Rel-10 TS36.104 CR)	10.2.0	10.3.0
2011-06	RP-52	RP-110812	219		Add 2GHz S-Band (Band 23) in 36.104	10.2.0	10.3.0
2011-06	RP-52	RP-110802	224		Co-existence/co-location between Band 42 and 43 in TS 36.104	10.2.0	10.3.0
2011-06	RP-52	RP-110796	225		Harmonization of co-existence between Home BS and WA BS in 36.104	10.2.0	10.3.0
2011-06	RP-52	RP-110807	221	1	LTE CA alignment of definitions in TS 36.104	10.2.0	10.3.0
2011-06	RP-52	RP-110807	220	1	Corrections on LTE Carrier Aggregation requirements	10.2.0	10.3.0
2011-06	RP-52	RP-110804	214	1	Expanded 1900 MHz addition to 36.104	10.2.0	10.3.0
2011-06	RP-52	RP-110795	233	1	Fixing the misalignment of Band 24 GPS Coexistence specifications between 36.104 and 37.104	10.2.0	10.3.0
2011-06	RP-52	RP-110811	223	2	Requirements for HeNB Autonomous Power Setting for Macro-eNB Scenario	10.2.0	10.3.0
2011-09	RP-53	RP-111252	249		Band 3/III operation in Japan	10.3.0	10.4.0
2011-09	RP-53	RP-111255	246	1	Band 42 and 43 for LTE 3500 (TDD) correction to TS 36.104	10.3.0	10.4.0
2011-09	RP-53	RP-111255	247	1	Add Band 22/XXII for LTE/UMTS 3500 (FDD) to TS 36.104	10.3.0	10.4.0
2011-09	RP-53	RP-111259	234	1	Introduction of correlation matrices for UL MIMO	10.3.0	10.4.0
2011-09	RP-53	RP-111260	236	2	Performance requirements for UL-MIMO	10.3.0	10.4.0

ONEPLUS - EX. 1027

2011-09	RP-53	RP-111262	240	1	CR to TS 36.104 Minimum requirements of Operating Band Unwanted Emissions	10.3.0	10.4.0
2011-09	RP-53	RP-111262	244		Co-existence and co-location corrections in 36.104	10.3.0	10.4.0
2011-09	RP-53	RP-111264	245		Band 25/XXV co-existence fix in TS 36.104	10.3.0	10.4.0
2011-09	RP-53	RP-111266	226	2	TS36.104 CR: on PUSCH performance	10.3.0	10.4.0

ONEPLUS - EX. 1027

2011-12	RP-54	RP-111684	254		Correction for uplink demodulation performance	10.4.0	10.5.0
2011-12	RP-54	RP-111734	255		Clarification of general blocking requirements for co-existence in TS 36.104	10.4.0	10.5.0
2011-12	RP-54	RP-111686	256		Requirements for HeNB Power Setting for HeNB-eNB Scenario	10.4.0	10.5.0
2011-12	RP-54	RP-111691	260		CA PUCCH performance requirements for 36.104	10.4.0	10.5.0
2011-12	RP-54	RP-111687	261	2	TX ON or OFF CR 36.104	10.4.0	10.5.0
2011-12	RP-54	RP-111733	262		Correction of frequency range for spurious emission requirements	10.4.0	10.5.0
2012-03	RP-55	RP-120296	265		TS36.104 CR: Add the Tx antenna number for CA PUCCH requirements	10.5.0	10.6.0
2012-03	RP-55	RP-120304	267	1	Definition of synchronized operation	10.5.0	10.6.0
2012-03	RP-55	RP-120295	268	1	Finalizing Home BS Output Power parameter for co-channel E-UTRA protection in 36.104	10.5.0	10.6.0
2012-03	RP-55	RP-120298	272	1	Addition of Band 23 HeNB specifications in 36.104	10.5.0	10.6.0
2012-03	RP-55	RP-120303	273		Editorial corrections in BS output power requirements	10.5.0	10.6.0
2012-03	RP-55	RP-120309	263	2	Introduction of intra-band non-contiguous operation for E-UTRA	10.6.0	11.0.0
2012-03	RP-55	RP-120310	264		TS36.104 change for B41 CA	10.6.0	11.0.0
2012-03	RP-55	RP-120305	274		Introduction of Band 26/XXVI to TS 36.104	10.6.0	11.0.0
2012-06	RP-56	RP-120773	296		Introduction of CA band combination Band4 + Band13 to TS 36.104	11.0.0	11.1.0
2012-06	RP-56	RP-120773	298		Introduction of CA band combination Band4 + Band17 to TS 36.104	11.0.0	11.1.0
2012-06	RP-56	RP-120791	299	2	Introduction of e850_LB (Band 27) to TS 36.104	11.0.0	11.1.0
2012-06	RP-56	RP-120773	280		Introduction of CA band combination Band1 + Band19 to TS 36.104	11.0.0	11.1.0
2012-06	RP-56	RP-120782	294		Time alignment error headline	11.0.0	11.1.0
2012-06	RP-56	RP-120764	305		Correction of PHS protection requirements for TS 36.104	11.0.0	11.1.0
2012-06	RP-56	RP-120788	279	1	Corrections related to intra-band non-contiguous operation for E-UTRA	11.0.0	11.1.0
2012-06	RP-56	RP-120788	285		Introduction of time alignment error requirement for intra-band non-contiguous carrier aggregation	11.0.0	11.1.0
2012-06	RP-56	RP-120793	286		Introduction of APAC700(FDD) into TS 36.104	11.0.0	11.1.0
2012-06	RP-56	RP-120793	292		Introduction of Band 44	11.0.0	11.1.0
2012-09	RP-57	RP-121328	306		Introduction of CA band combination Band2 + Band17 to TS 36.104	11.1.0	11.2.0
2012-09	RP-57	RP-121321	307		Correction to intra-band non-contiguous carrier aggregation bands acronym	11.1.0	11.2.0
2012-09	RP-57	RP-121335	308		Introduction of CA band combination Band1 + Band21 to TS 36.104	11.1.0	11.2.0
2012-09	RP-57	RP-121327	309		Introduction of CA_B7_B20 in 36.104	11.1.0	11.2.0
2012-09	RP-57	RP-121301	312		Introduction of Japanese regulatory requirements for LTE band 8, 36.104 R11	11.1.0	11.2.0
2012-09	RP-57	RP-121340	313	2	Performant requirements of PUCCH format 2 with DTX detection for 36.104	11.1.0	11.2.0
2012-09	RP-57	RP-121334	314	1	Add requirements for inter-band CA of B_1-18 in TS36.104	11.1.0	11.2.0
2012-09	RP-57	RP-121338	315	1	TS 36.104 CR for CA_7	11.1.0	11.2.0
2012-09	RP-57	RP-121340	316	2	Reusing band 41 requirements for the Japan 2.5G TDD band	11.1.0	11.2.0
2012-09	RP-57	RP-121329	317		Introduction of CA band combination Band3 + Band5 to TS 36.104	11.1.0	11.2.0
2012-09	RP-57	RP-121321	318	1	Intra-band non-contiguous CA BS receiver requirement	11.1.0	11.2.0
2012-09	RP-57	RP-121300	324		Modificaitions of frequency ranges on spurious emission requirements for Band 6, 18, 19	11.1.0	11.2.0
2012-09	RP-57	RP-121331	325		Introduction of CA band combination Band3 + Band20 to TS 36.104	11.1.0	11.2.0
2012-09	RP-57	RP-121333	327		Introduction of CA band combination Band8 + Band20 to TS 36.104	11.1.0	11.2.0
2012-09	RP-57	RP-121324	328		Introduction of CA_B3_B7 in 36.104	11.1.0	11.2.0
2012-12	RP-58	RP-121884	0330		Introduction of CA band combination Band3 + Band8 to TS 36.104	11.2.0	11.3.0
2012-12	RP-58	RP-121861	0331		Introduction of CA band combination Band4 + Band5 to TS 36.104	11.2.0	11.3.0
2012-12	RP-58	RP-121896	0332		Introduction of CA band combination Band5 + Band17 to TS 36.104	11.2.0	11.3.0
2012-12	RP-58	RP-121906	0333		Introduction of medium range BS class to TS 36.104 (clause 1-5)	11.2.0	11.3.0
2012-12	RP-58	RP-121861	0335		Correction of performance requirements of PUCCH format2 with DTX	11.2.0	11.3.0
2012-12	RP-58	RP-121855	0338		Modification of ouput power requirement for LA E-UTRA BS	11.2.0	11.3.0
2012-12	RP-58	RP-121861	0340		Correction on BS demodulation performance	11.2.0	11.3.0
2012-12	RP-58	RP-121867	0343		Clean up of specification R11	11.2.0	11.3.0

ONEPLUS - EX. 1027

2012-12	RP-58	RP-121911	0344	1	Modification on E-UTRA BS transmitter requriements	11.2.0	11.3.0
2012-12	RP-58	RP-121899	0348	1	Implementing NC CA in LTE LA	11.2.0	11.3.0
2012-12	RP-58	RP-121894	0349		Introduction of CA_B5_B12 in 36.104	11.2.0	11.3.0
2012-12	RP-58	RP-121899	0351		Correction to intra-band non-contiguous carrier aggregation bands acronym	11.2.0	11.3.0
2012-12	RP-58	RP-121906	0352	2	Transmitter characteristics (Clause 6) due to introduction of Medium Range BS	11.2.0	11.3.0
2012-12	RP-58	RP-121906	0353	1	E-UTRA MR BS receiver requirements	11.2.0	11.3.0
2012-12	RP-58	RP-121899	0354	1	Further corrections for NC CA in LTE LA BS	11.2.0	11.3.0
2012-12	RP-58	RP-121887	0355		Introduction of inter-band CA_4-12 into TS 36.104	11.2.0	11.3.0
2012-12	RP-58	RP-121882	0356		Introduction of inter-band CA_11-18 into TS 36.104	11.2.0	11.3.0
2012-12	RP-58	RP-121907	0357		Introduction of new BS classes to E-UTRA core specification (performance part)	11.2.0	11.3.0
2012-12	RP-58	RP-121863	0362		Removal of brackets around medium correlation in table	11.2.0	11.3.0
2012-12	RP-58	RP-121892	0363		Introduction of inter-band CA_4-7 into TS 36.104	11.2.0	11.3.0
2012-12	RP-58	RP-121901	0364		Introduction of Band 29	11.2.0	11.3.0
2012-12	RP-58				Editorial Corrections	11.3.0	11.3.1
2013-03	RP-59	RP-130307	0290	1	TS 36.104 CR for CA_38	11.3.1	11.4.0
2013-03	RP-59	RP-130365	0336	3	CR 36.104: Performant requirements of PUCCH format 2 with DTX detection	11.3.1	11.4.0
2013-03	RP-59	RP-130266	368		Correction of BS performance requirements	11.3.1	11.4.0
2013-03	RP-59	RP-130273	371	1	Supplement some note information for MR BS in TS 36.104	11.3.1	11.4.0
2013-03	RP-59	RP-130273	372	1	Correction of UEM requirements in TS 36.104	11.3.1	11.4.0
2013-03	RP-59	RP-130273	373		Correction to LTE BS classes core requirements	11.3.1	11.4.0
2013-03	RP-59	RP-130284	375	1	Alignment of terminology for intra-band non-contiguous CA requirement	11.3.1	11.4.0
2013-03	RP-59	RP-130287	376		Band 41 requirements for operation in Japan	11.3.1	11.4.0
2013-03	RP-59	RP-130287	377		CR 36.104: Performance requirements of PUCCH format 2 with DTX detection and removal of brackets.	11.3.1	11.4.0

ONEPLUS - EX. 1027