(12) INTERNATIONAL APPLICATION PUBLISHED UNDER THE PATENT COOPERATION TREATY (PCT)

(19) World Intellectual Property Organization
International Bureau

(43) International Publication Date
4 January 2001 (04.01.2001)

PCT

(10) International Publication Number
WO 01/01373 A2

(51) International Patent Classification[7]: G09B 5/00

(21) International Application Number: PCT/US00/17266

(22) International Filing Date: 23 June 2000 (23.06.2000)

(25) Filing Language: English

(26) Publication Language: English

(30) Priority Data:
09/344,499 25 June 1999 (25.06.1999) US

(71) Applicant: DISCOVERY COMMUNICATIONS, INC. [US/US]; 7700 Wisconsin Avenue, Bethesda, MD 20814-3522 (US).

(72) Inventors: HENDRICKS, John, S.; 8723 Persimmon Tree Road, Potomac, MD 20854 (US). ASMUSSEN, Michael, L.; 2627 Meadow Hall Drive, Oak Hill, VA 20171 (US).

(74) Agents: VIETZKE, Lance, L. et al.; Dorsey & Whitney LLP, Suite 300 South, 1001 Pennsylvania Avenue, N.W., Washington, DC 20004 (US).

(81) Designated States *(national)*: AE, AL, AM, AT, AU, AZ, BA, BB, BG, BR, BY, CA, CH, CN, CR, CU, CZ, DE, DK, DM, EE, ES, FI, GB, GD, GE, GH, GM, HR, HU, ID, IL, IN, IS, JP, KE, KG, KP, KR, KZ, LC, LK, LR, LS, LT, LU, LV, MA, MD, MG, MK, MN, MW, MX, NO, NZ, PL, PT, RO, RU, SD, SE, SG, SI, SK, SL, TJ, TM, TR, TT, TZ, UA, UG, UZ, VN, YU, ZA, ZW.

(84) Designated States *(regional)*: ARIPO patent (GH, GM, KE, LS, MW, MZ, SD, SL, SZ, TZ, UG, ZW), Eurasian patent (AM, AZ, BY, KG, KZ, MD, RU, TJ, TM), European patent (AT, BE, CH, CY, DE, DK, ES, FI, FR, GB, GR, IE, IT, LU, MC, NL, PT, SE), OAPI patent (BF, BJ, CF, CG, CI, CM, GA, GN, GW, ML, MR, NE, SN, TD, TG).

Published:
— *Without international search report and to be republished upon receipt of that report.*

[Continued on next page]

(54) Title: ELECTRONIC BOOK WITH VOICE EMULATION FEATURES

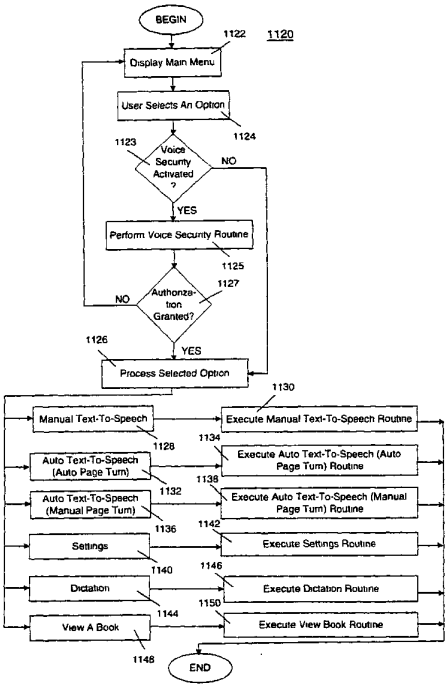

(57) Abstract: A viewer for displaying an electronic book having various text-to-speech and speech recognition features. The viewer permits a user to select text in a displayed electronic book and have it converted into corresponding speech. In addition, a user may have the viewer automatically perform text-to-speech conversion for an entire displayed electronic book or a particular page of the electronic book. The viewer also permits a user to enter voice commands.

WO 01/01373 A2

Amazon v. Audio Pod
US Patent 10,805,111
Amazon EX-1059

For two-letter codes and other abbreviations, refer to the "Guidance Notes on Codes and Abbreviations" appearing at the beginning of each regular issue of the PCT Gazette.

ELECTRONIC BOOK WITH VOICE EMULATION FEATURES

Related Applications

This application is a continuation-in-part of U.S. Application Serial No. 08/336,247 entitled ELECTRONIC BOOK SELECTION AND DELIVERY SYSTEM, filed November 7, 1994, and U.S. Application Serial No. 08/160,194, entitled ADVANCED SET-TOP TERMINAL FOR CABLE TELEVISION DELIVERY SYSTEMS, filed December 2, 1993, and U.S. Application Serial No. 08/906,469, entitled REPROGRAMMABLE TERMINAL FOR SUGGESTING PROGRAMS OFFERED ON A TELEVISION PROGRAM DELIVERY SYSTEM, filed August 5, 1997 which is a continuation of U.S. Application Serial No. 08/160,281, entitled TERMINAL FOR SUGGESTING PROGRAMS OFFERED ON A TELEVISION PROGRAM DELIVERY SYSTEM, filed December 2, 1993, which is now U.S. Patent No. 5,798,785, dated August 25, 1998, all of which are incorporated herein by reference.

This application is related to U.S. Application Serial No. 09/237,828, filed on January 27, 1999, entitled ELECTRONIC BOOK ELECTRONIC LINKS, U.S. Application Serial No. 09/289,957, filed on April 13, 1999, entitled ELECTRONIC BOOK ALTERNATIVE DELIVERY SYSTEMS, and U.S. Application Serial No. 09/289,956, filed on April 13, 1999, entitled ELECTRONIC BOOK ALTERNATIVE DELIVERY METHODS, all of which are incorporated herein by reference.

Technical Field

This invention is directed to an electronic book unit having one or more electronic books. More specifically, the invention relates to an apparatus and method for providing text-to-speech and speech recognition features for electronic books.

Background Art

Sparked by the concept of an information superhighway, a revolution will take place in the distribution of books. Not since the introduction of Gutenberg's movable typeset printing has the world stood on the brink of such a revolution in the distribution of text material. The definition of the word "book" will change drastically in the near future. Due to reasons such as

security, convenience, cost, and other technical problems, book and magazine publishers are currently only able to distribute their products in paper form. This invention solves the problems encountered by publishers.

Summary Of Invention

Methods and apparatus consistent with the present invention include features for text-to-speech conversion and speech recognition for electronic books. In one embodiment, the methods and apparatus display a page of an electronic book on a viewer, the page including text. They receive a selection of text on the displayed page for conversion to speech and convert at least a portion the selected text into the corresponding speech. They may alternatively automatically display a next page of the electronic book and convert at least a portion of text on the next page into corresponding speech, or automatically perform the conversion upon selection of the next page by a user.

For speech recognition, the methods and apparatus receive speech from a user. They convert the speech into corresponding electronic text and inserting the text into the electronic book.

For voice or audible commands, the methods and apparatus receive an audible command relating to a function of the electronic book. They convert the audible command into a corresponding electronic signal and execute the function in response to the electronic signal.

For voice security, the methods and apparatus store an electronic book for display on a viewer. They receive an audible command from a user relating to a function of the electronic book and convert the audible command into a corresponding electronic signal. Commands from the user, relating to the electronic book, are executed only if the electronic signal satisfies particular criteria.

Brief Description Of Drawings

Figure 1 is a block diagram of the primary components of the electronic book selection and delivery system.

Figure 2 is a schematic showing an overview of the electronic book selection and delivery system.

Figure 3a is a schematic of the delivery plan for the electronic book selection and delivery system.

Figure 3b is a schematic of an alternate delivery plan.

Figure 4 is a block diagram of an operations center.

Figure 5a is a flow diagram of the processing at the operations center and uplink.

Figure 5b is a block diagram of the hardware configuration for an uplink site.

Figure 6a is a block diagram of the hardware configuration for a four component home subsystem.

Figure 6b is a schematic of a two unit home subsystem.

Figure 7 is a flow diagram of the processes performed by the video connector.

Figure 8 is a block diagram for an example of a library unit.

Figure 9 is a flow diagram of some of the processes performed by the library on the received data stream.

Figure 10 is a flow diagram of the processes performed by the library unit on information requests from the viewer.

Figure 11 is a block diagram showing the components for an example of a viewer.

Figure 12 is a flow diagram of some of the processes performed by the viewer on an information request from a subscriber.

Figure 13 is a chart depicting the menu structure and sequencing of menus in the menu system.

Figure 14a is a schematic of an introductory menu.

Figure 14b is a schematic showing an example of a main menu.

Figures 14c, 14d, 14e, 14f, 14g, 14h, 14i and 14j are schematics showing examples of submenus.

Figure 15 is a schematic diagram of an electronic book system for a bookstore or public library.

Figure 16a and Figure 16b are schematics of hardware modifications or upgrades to a set top converter.

Figure 17 is a schematic showing a set top terminal that includes a data receiver and data transmitter.

Figure 18a is a schematic of a book-on-demand system.

Figure 18b is a schematic of an operations center supporting a book-on-demand system.

Figure 19 is a diagram of a main menu screen for presenting on a viewer voice emulation options for electronic books.

Figure 20 is a flow chart of a main menu routine.

Figure 21 is a flow chart of a manual text-to-speech routine.

Figure 22 is a diagram of a book menu screen.

Figure 23 is a diagram of a page of an electronic book.

Figure 24 is a diagram of a page of an electronic book illustrating selected text for conversion to speech.

Figure 25 is a flow chart of an automatic text-to-speech routine with an automatic page turn feature.

Figure 26 is a flow chart of an automatic text-to-speech routine with a manual page turn feature.

Figure 27 is a flow chart of a settings routine.

Figure 28 is a diagram of a settings menu.

Figure 29 is a flow chart of a dictation routine.

Figure 30a is a diagram of a page of an electronic book with transcribed text.

Figure 30b is a diagram of a page of an electronic book with a section for presenting transcribed text.

Figure 31 is a flow chart of a view book routine.

Figure 32 is a diagram of a view book screen.

Figure 33 is a flow chart of a voice commands routine.

Figure 34 is a flow chart of a voice security routine.

Detailed Description

An electronic book selection and delivery system is a new way to distribute electronic books to bookstores, public libraries, schools and consumers. The technological breakthroughs of this invention provide a secure system for both delivering selected electronic books and receiving payments. The system has an unusual combination of features that provides the consumer with an electronic book unit that has a high tech aura while being very practical, portable, and easy to use.

The clear advantage of the system is that it eliminates the distribution of any physical object such as a paper book or computer memory device from any book or text distribution system. The purchase of an electronic book may become a PAY-PER-READ™ event avoiding the overhead, "middle-men," printing costs, and time delay associated with the current book distribution system. Published material and text such as the President's speech, a new law, a court decision on abortion, or O.J. Simpson's testimony can be made immediately available to the consumer at a nominal fee.

The system is a novel combination of new technology involving the television, cable, telephone, and computer industries. It uses high bandwidth data transmissions, strong security measures, sophisticated digital switching, high resolution visual displays, novel controls, and user friendly interface software.

The primary components of the text delivery system are the subsystem for placing the text onto a signal path and the subsystem for receiving and selecting text that was placed on the signal path. A preferred embodiment of the system includes additional components and optional features that enhance the system. The system may be configured for use by bookstores, public libraries, schools and consumers.

The system for consumer use is made up of four subsystems, namely: (1) an operations center, (2) a distribution system, (3) a home subsystem including reception, selection, viewing, transacting and transmission capabilities, and (4) a billing and collection system.

The operations center performs several primary functions: manipulating text data (including receiving, formatting and storing of text data), security encoding of text, cataloging of books, providing a messaging center capability, and performing uplink functions. The system delivers the text from the operations center to consumer homes by inserting text data into an appropriate signal path. The insertion of text is generally performed with an encoder at an uplink site that is within or near the operations center. If the signal path is a video signal path, the system can use several lines of the Vertical Blanking Interval (VBI), all the lines of the analog video signal, a digital video signal or unused portions of bandwidth to transmit text data. Using the VBI delivery method, the top ten or twenty book titles may be transmitted with video during normal programming utilizing existing cable, satellite, wireless or broadcast transmission capability without disruption to the subscriber's video reception. Using the entire video signal, thousands of books may be transmitted within just one hour of air time. Nearly any analog or digital video distribution system may be used to deliver the video signal with included text.

The text data may also be transmitted over other low and high speed signal paths including a telephone network (e.g., a public switched telephone network) having a high speed connection such as an asynchronous digital subscriber line (ADSL) connection. Alternatively, other delivery systems may be used, such as those disclosed in the related applications identified above.

The home subsystem performs four primary functions: connecting to the video distribution system, selecting text, storing text, and transacting through a phone or cable communicating mechanism. The components of the home subsystem may be configured in a variety of hardware configurations. Each function may be performed by a separate component, the components may be integrated, or the capability of existing cable set top converter boxes, personal computers, and televisions may be utilized. Preferably, a connector, library unit and

an electronic book unit, or viewer unit, are used. The connector portion of the home subsystem receives the analog video signal and strips or extracts the text from the video. The home library stores the text signal, provides a user friendly software interface to the system and processes the transactions at the consumer home. The viewer provides a screen for viewing text or menus and novel user friendly controls. The viewer may also incorporate all the functionality of the home subsystem.

The viewing device is preferably a portable book shaped viewer which stores one or more electronic books for viewing and provides a screen for interacting with the home library unit. A high resolution LCD display is used to both read the books and to interact with the home library software. An optional phone connector or return-path cable connection initiates the telephone calls and, with the aid of the library, transmits the necessary data to complete the ordering and billing portion of the consumer transaction. The user friendly controls include a bookmark, current book and page turn button. The billing and collection system performs transaction management, authorizations, collections and publisher payments automatically utilizing the telephone system. Alternatively, other ordering methods may be used, such as those disclosed in the related applications identified above.

In one embodiment, the primary components of the electronic book selection and delivery system 200 are an encoder 204, a video distribution system 208, a connector 212, and a text selector 216 as shown in Figure 1. The encoder 204 places textual data on a video signal to form a composite video signal. Although the composite signal may contain only textual data, it usually carries both video and textual data. A variety of equipment and methods may be used to encode text data onto a video signal. The video distribution system 208 distributes the composite video signal from the single point of the encoder 204 to multiple locations which have connectors 212. The connector 212 receives the digital or analog video signal from the video distribution system 208 and separates, strips or extracts the text data from the composite video signal. If necessary, the extracted text data is converted into a digital bit stream. Text selector 216 works in connection with the connector 212 to select text.

Using a connector 212 and text selector 216 combination, various methods of selecting and retrieving desired text from a composite or video signal are possible. Text may be preselected, selected as received or selected after being received and stored. A preferred method is for the connector 212 to strip or extract all the text from the video signal and have the text selector 216 screen all the text as received from the connector 212. The text selector 216 only stores text in long term or permanent memory if the text passes a screening process described below.

An overview of the electronic book selection and delivery system 200 is shown in Figure 2. The delivery system 200 includes: an operations center 250 including an uplink site 254, a video distribution system 208, a home system 258 including a video connector 212, a library 262, a viewer 266, and a phone connector 270, telephone system 274, an internet web site 279 and a billing and collection system 278. Also as shown in Figure 2, the home system 258 may include connections to a television 259 and a personal computer 261. The television 259 and the personal computer 261 may be used to display menu screens, electronic books, electronic files, or any other information associated with the delivery system 200. In addition, the television 259 and the personal computer 261 may provide control function that replicate and supplement those of the viewer 266.

The operations center 250 receives textual material from outside sources 282 such as publishers, newspapers, and on-line services. Alternately, the outside sources may maintain electronic books at the Internet web site 279. The outside sources 282 may convert textual and graphical material to digital format, or may contract with another vendor to provide this service. The operations center 250 may receive the textual and graphical material in various digital formats and may convert the textual material to a standard compressed format for storage. In so doing, the operations center 250 may create a pool of textual material that is available to be delivered to the home system 258. The textual material may be grouped by books or titles for easy access.

As used herein, "book" means textual or graphical information such as contained in any novels, encyclopedias, articles, magazines or manuals. The term "title" may represent the actual title assigned by an author to a book, or any other designation indicating a particular group, portion, or category of textual information. The title may refer to a series of related textual information, a grouping of textual information, or a portion of textual data. For example, "Latest Harlequin Romance", "Four Child Reading Books (Ages 10-12)", "Encyclopedia 'BRITANNICA'™", "President's Speech", "Instruction Manual", "Schedule of 4th of July Events", "Pet Handbooks", "Roe v. Wade", and "The Joy of Cooking" are suitable titles. Also, the title may be a graphical symbol or icon. Thus, a picture of a wrench may be a title for a repair book, a picture of a computer a title for a computer book, a graphical symbol of a telephone a title for a telephone book, a drawing of a dagger a title for a mystery book, a picture of a bat and ball a title for a sports book and a picture of tickertape a title for a business book. The term "electronic book" refers to the electronic counterpart to a "book."

The operations center 250 includes an uplink site 254 for placing the text onto a video signal and sending the composite video signal into a video distribution system. The uplink site 254 would generally include an encoder 204 (not shown in Figure 2) to encode the text onto a video signal.

Many analog and digital distribution systems 208, or other telecommunications systems, can be used with the delivery system 200, such as a cable television distribution system, a broadcast television distribution system, video distributed over telephone systems, distribution from the Internet, direct satellite broadcast distribution systems, and other wired and wireless distribution systems.

The home system 258 performs five primary functions: (1) connecting with a video distribution system, (2) selecting data, (3) storing data, (4) displaying data, and (5) handling transactions. An important optional function of the home sub-system 258 is communicating using a telephone communication system 274. The home system 258 is made up of primarily four parts: a video connector 212 or similar type of connector for connecting with the video

distribution system 208, a library unit 262 for storing and processing, an electronic book, or viewer unit, 266 for viewing menus and text and a telephone connector 270 for connecting with a telephone communications system 274. In an alternate arrangement, the viewer 266 may include all the functionality of the home system 258.

The billing and collection system 278 may be co-located with the operations center 250 or located remote from the operations center 250. In one embodiment, the billing and collection system 278 is in communication with the home system 258 via telephone-type communication systems (for example 274). Any of a number of telephone type communication systems, such as, a cellular system, will operate with the billing and collection system 278. The billing and collection system 278 records the electronic books or portions of text that are selected or ordered by the subscriber. The collection system will charge a subscriber's credit account or bill the subscriber. In addition, the billing and collection system 278 will monitor that amount due to publishers or other outside sources 282 who have provided textual data or other services such as air time to enable the text delivery system 200 to operate.

When electronic books are provided via the Internet web site 279, the billing and collecting functions may be incorporated into the Internet web site 279. For example, a subscriber may pay for an electronic book selection by entering a credit card number into a data field of a page of the Internet web site 279. In this configuration, a separate billing and collection system may not be required.

Figure 3a is an expanded overview of a delivery plan 301 for the delivery system 200. The delivery plan 301 supports various types of subscribers and various billing systems. Figure 3a shows that publishers 282 will provide text transfer 302 to the operations center 250' and receive payments 306 from the billing and collection system 278'. A separate channel uplink site 254' is shown in this configuration receiving data 310 from the operations center 250'. The operations center 250' has three separate sections (318, 322, 326) one for text receiving, formatting and re-entry 318, a second for security encoding 322 and a third section for catalog and messaging center functions 326.

The billing and collection system 278' shown has two sections (330, 334) one for transaction management, authorizations and publisher payments 330, and the other for customer service 334. The customer service section 334 provides for data entry and access to customer account information. Transaction accounting information 338 is supplied to credit card companies 342 by the transaction management section 330 of the billing and collection system 278'. The credit card companies 342 provide billing 346 to customers either electronically or by mail.

Three methods for communicating between the subscriber base 348 and the billing and collection system 278' are shown: by telephone switching 350 alone, cellular switching 354 and telephone switching 350 combined, and by use of the cable system 358 and the telephone switching 350. The system shown supports both one-way 362 and two-way cable communication 366 with subscribers. Public libraries and schools 370 as well as bookstores 374 may use the delivery system 301.

Public libraries and schools 370 would have a modified system to allow the viewer 266 to be checked-out or borrowed while bookstores 374 would rent or sell the viewer 266 and sell the electronic books. The bookstores 374 as well as the public libraries and schools 370 may be serviced by cable 378. Optional direct broadcast systems (DBS) 382 can also be used with the delivery system 200. The DBS 382 may provide the electronic books using digital satellite technology, with the electronic books being received via a backyard satellite antenna, for example.

Figure 3b is an alternate delivery plan 301'that provides for electronic book selection and delivery using the Internet. In Figure 3b, the publishers 282 provide the electronic books to be posted at the Internet web site 279. The publishers may convert the text and graphical data to digital format, compress the digital data, and upload the compressed digital data to the Internet web site 279. Alternately, the publishers 282 may arrange for an outside conversion activity 283 to convert the text and graphical data to digital format. The conversion activity 283 may then provide the digital data to the Internet web site 279. For example, a large on-line

bookstore could gather publications in electronic form from a variety of publishers, or could convert hard-copy books to electronic form, and post the electronic books on the Internet such as at the Internet web site 279.

The electronic books may then be transferred via a public switched telephone network (PSTN), for example, direct to a subscriber 285, a library 286 and a bookstore 287. The library 286 and the bookstore 287 may also provide electronic books to the subscriber 285.

I. The Operations Center

Figure 4 is a schematic of an operations center 250 which includes an uplink 254. The operations center 250 gathers text or books by receiving, formatting, storing, and encoding. A data stream 302 containing text is received at the operations center 250 by a data receiver 402. The data receiver 402 is under the control of a processor 404. After reception, the data stream is formatted using digital logic for formatting 406 which is also under the control of the processor 404. If any additional text is being generated at the operation center 250 locally for insertion into the distributed signal, the text generation is handled through text generator hardware 410 which may include a data receiver and a keyboard (not shown). Following processing by the text generator 410, the additional text can be added to the text received by the combining hardware 414 that includes digital logic circuitry (not shown).

The processing at the operations center 250 is controlled by a processor 404 which uses an instruction memory 416. The processor 404 and instruction memory 416 may be supplied by a personal computer or mini-computer. To perform the catalog and messaging functions, the operations center 250 uses a catalog and message memory 420 and the text generator 410 if necessary.

The data stream of text, catalog and messages is preferably encoded by security module encoding 424 prior to being sent to the uplink module 254. Various encoding techniques may be used by the security encoding module 424 such as the commercial derivative of NSA's encryption algorithm (Data Encryption System (DES)) and General Instrument's DigiCipher II. Following encoding, the encoded text may be stored in text memory 428 prior

to being sent to the uplink 254. A first-in-first-out text memory arrangement may be used under the control of the processor 404. Various types of memory may be used for the text memory 428 including RAM. The operations center 250 may use file server technology for the text memory 428 to catalog and spool electronic books for transmission as is described below.

To transmit textual data (i.e., electronic books), the delivery system 208 uses high bandwidth transmission techniques such as those defined by the North American Broadcast Teletext Standard (NABTS) and the World System Teletext (WST) standard. Using the WST format (where each line of the Vertical Blanking Interval contains 266 data bits), a four hundred page book, for example, may be transmitted during programming using four lines of the Vertical Blanking Interval at a rate of approximately one book every 1.6 minutes (63,840 bits per second). Alternatively, electronic books may be transmitted over a dedicated channel, which interrupts programming so that 246 lines of video can be used to transmit approximately 2,250 books every hour (3.9 Mbits per second). A teletext type format is the simplest but possibly the slowest text format to use with the delivery system 200. In either event, an encoder 204 is utilized at an uplink site 254 to insert textual data into the analog video signal. In many other respects, the delivery of the textual information is completed using existing cable television plant and equipment.

Figure 5a is a flowchart of the steps involved in processing text from the publisher or provider 282 that occurs at the operations center 250. As shown in block 500, the publisher 282 processes data files of text for books, compresses, encrypts and sends the data files to the operations center 250 or uplink 254. Text files for books are preferably sent one book at a time. As shown in block 504, the uplink 254 or operations center 250 receives and processes the data stream from the publisher 282. Generally, part of this processing includes encryption and error correction.

As shown in block 508, files are broken into smaller packets of information. Header information is added to the packets. The bit stream is converted from a serial digital bit stream

to an analog bit stream that is compatible with an NTSC video signal. Block 512 shows the switching of analog data into the video lines of a video signal. The analog data is generally placed either in the VBI or the active video lines. In some instances, it may be preferable to utilize unused portions of bandwidth (such as 5-40 MHZ, 70-75 MHZ, 100-109 MHZ or other guard bands) instead of the video lines.

Figure 5b is an example of a hardware configuration to perform some of the functions for blocks 508 and 512. A video feed 516 is received and processed through a sync stripper 520. The stripped sync signal 532 is used by the digital logic control 524. The digital logic control 524 receives the sync signal 532 and a serial digital bit stream 528 for processing. The digital logic control 524 passes the serial digital bit stream to the Digital to Analog converter 536 and outputs a control signal 540 for the video switch 544. The video switch 544 integrates the video feed 516 and analog data stream 548 into a video feed with analog data signal inserted 552.

As an alternative to cable, satellite, broadcast, or other television delivery methods, the public telephone system may be used to transmit books to the subscribers. An average electronic book would take about 7 minutes to transmit over the public telephone system. Using the telephone system, it is not necessary to combine video and text into a composite signal. In most other respects, the operation center would remain similar whether text delivery was by telephone or cable. File server technology (such as that described in U.S. Patent No. 5,262,875, entitled AUDIO/VIDEO FILE SERVER INCLUDING DECOMPRESSION/PLAYBACK MEANS, issued to Mincer, et al., and, U.S. Patent No. 5,218,695, entitled FILE SERVER SYSTEM HAVING HIGH-SPEED WRITE EXECUTION, issued to Noveck, et al., incorporated herein by reference) may be used at the operation center with a telephone system text delivery method.

As another alternative to cable, television, and telephone system delivery, the public telephone system may be used to provide access to the Internet, where the Internet web site

279 may be accessed. Electronic books may be ordered, paid for, and delivered directly from the Internet web site 279 over the telephone system.

In any delivery system using the telephone system, individual subscribers may increase the electronic book deliver rate by incorporating high speed modems or other communication devices such as an Integrated Services Digital Network (ISDN) connector, or by use of an Asymmetric Digital Subscriber Line (ADSL)

II. The Home System

The hardware configuration for a four component home system 258 is shown in Figure 6a. Figure 6b shows a hardware configuration for a two component home system. The hardware components may also be incorporated into a single unit that communicates with a terminal in a television delivery system or with a telephone system by use of a modem, for example. The home system 258 performs several functions, such as receiving data and video transmissions, stripping (or extracting) the data from the video signal, screening and storing the data, providing user friendly interface controls and software, displaying menus and text, processing transactions, initiating telephone calls and transmitting billing data. Various hardware configurations may be utilized to achieve the desired functions of the home system 258. For example, as shown in Figure 6b, the home system 258 can be configured to utilize the reception and channel tuning capability of the current installed subscriber base of cable converter boxes and televisions 601. The home system 258 can also be designed as an advanced set top terminal converter box with menu generation capability, electronic memory and a telephone modem as described in section V below.

The electronic components which make up the home system 258 can be arranged in a variety of ways. In the four unit system of Figure 6a the viewer 266 and library unit 262 are wired together while the remaining components communicate through RF transceivers 604. In a simple version of the home system 258 there are only two units, the library unit 262 and a viewer 266. Figure 6b shows a two unit home system 258 with certain optional features.

Finally, all the functionality of the home system 258 may be incorporated into one electronic book unit, or viewer.

The viewer 266 is generally equipped with a high resolution viewing area 602, digital logic (including a key 605, security 606, and a microprocessor 621), video graphics control and memory 607, power supply circuitry 602 (not shown), an optional battery 603 and an optional RF transceiver 604. In a two unit arrangement, the library unit 262 contains the connector function to the video distribution system 208, connector function to a public telephone communications system, and memory 600 (which may be removable and portable 600'). More specifically, the library unit 262 would include data stripping functions 617, digital logic 609, memory storage 600, power circuitry 610, optional telephone connections 611 (including cellular or PCN 611'), optional battery (not shown), optional tuner module 613 and an optional RF transceiver 604. The video connector 212 and the public telephone system connection 270, as well as the removable portable memory unit 600 of the library unit 262 may be broken out into separate components. (Figure 6b shows a removable portable hard disk memory 600' with removable cartridges 614.) Finally, the home system 258 may include an attached keyboard 267 or a wireless keyboard 268. Both the attached keyboard 267 and the wireless keyboard 268 may be used to communicate with the viewer 266 (not shown) or the library unit 262.

The wireless keyboard 268 may communicate via radio frequency (RF) signaling, for example. Therefore, the home system 258 may have as many as six separate components which communicate with each other. The two, three, four, five or six separate components which make up the home system 258 can communicate with each other in a variety of ways, including hardwired connection 615, RF transceiver 604, and other wireless methods.

RF communications are preferred in the home because they allow separate components to be located throughout the home without restriction. The data communicated between the units is preferably secure data. In addition, the library unit 262 may provide power to the viewer 266 through the hardwired connection 615.

Alternatively, a single unit may perform all of the home system 258 functions. The single unit should use light-weight materials, including a light-weight battery. A single unit eliminates the need to communicate (externally) between units. The single unit is less expensive and eliminates duplicative processing, memory storage and power circuitry.

To receive and strip the data from the video signal at the consumer's home, either a cable interface device or cable connector 212 is used. The cable connector device includes a tuner 613, while the cable interface device makes use of existing tuning equipment in the home. In either configuration, data is stripped from the video signal and stored at the subscriber's location in the library unit 262. The phone connector 270, and modem 611 initiate telephone calls and transmit ordering and billing information to the operations center 250 or billing and collection system 278. Alternatively, the phone connecter 270 and the modem 611 may be used to provide access to the Internet to order and receive electronic books from an Internet web site. A digital connector 619 is provided to communicate digital information with the set top 601. The library unit 262 is the intelligent component of the home system, incorporating the hardware and software necessary to store the text data, generate menus and effect the purchase transactions. In addition to an RF transceiver 604, the library unit 262 also includes the necessary jacks and connections to allow the delivery system 200 to be connected to the viewer 266. As shown in Figure 6b, the library 262 communicates the text data (electronic book) to the viewer 266 in a secure format which requires a key 605 for decryption. The text is generally only decrypted page by page just before viewing.

a. <u>The Video Connector</u>

Figure 7 shows the flow of the processes performed by the video connector 212. The video connector receives the video signal 608, tunes to the channel containing the text data 612, strips the text data from the video signal 616, and communicates the text data stream to logic components in the library 620.

The connection to the video distribution system is preferably a cable connector to a cable television delivery system, as shown in Figure 6b. The cable connector includes a data

stripper circuit 617, which accepts video input from either a set top converter, TV or VCR 601, or an optional tuner block 613 that receives the CATV signal through the cable connector 212'. The data stripper circuit 617 strips data out of the video, and outputs a digital bit stream to the digital logic portion 609 of the library unit 262. The data is embedded in the video signal either in the vertical blanking interval or the active video portion in an encrypted and compressed format. The data stripper circuit 617 can be placed inside the set top converter box 601, TV, or in the library unit. The data stripper circuit 617 outputs the digital bit stream to be used by the library digital logic 609.

The video connector 212 may also contain a channel tuner module 613 that can tune to the video channel and provide access to the video that contains the data to be stripped. Using the optional tuner module 613, a set top converter, VCR, or TV tuner is not needed in the home system. The optional tuner module 613 would instead receive the CATV signal directly through the cable connector 212.

b. Library

An embodiment of the library unit 262 for a two unit home system 258 is shown in both Figure 6b and Figure 8. The embodiment shown includes the following optional parts: the video connector 212, phone connector 270, RF transceiver 604, and battery pack 624 in addition to a removal portable memory 600', microprocessor 628, instruction memory unit 632, digital logic 636, and power unit 640.

The library unit 262 contains a digital logic section 609 (not shown in Figure 8) which includes the microprocessor 628, the digital logic 636 and the instruction memory unit 632. The microprocessor 628 is preferably a secure microprocessor such as the Mot SC21 device sold by Motorola. The digital logic section 609 will receive the serial digital bit stream from the data stripper circuit 617 and process the data. Error correction will also be performed by the digital logic section 609 and the data will be checked for proper address. If the address of the data is correct and the library unit 262 is authorized to receive the data, the data will be transferred to the memory storage unit 600, 600'. Authorization to receive the data is provided

by the cable headend or another distribution point. An authorization code may be sent in the serial digital bit stream. The digital logic section 609 will send appropriate text and graphical data to the memory storage unit 600, 600'. It transfers this data in a compressed and encrypted format and the data remains stored in a compressed and encrypted format.

i. Memory Storage Unit

The memory storage unit of the library may be a removable portable memory unit 600' (as shown in Figures 6a, 6b and 8). A variety of options are available for memory storage: a hard disk drive, a hard disk with removable platters, and a CD ROM or memory stick. Referring to Figure 6b, a hard disk drive unit 600' which contains removable platters may also be used. This would provide virtually unlimited library storage capacity. Data (i.e., electronic book files) may be stored in the memory storage unit in a compressed and encrypted format. As is also shown in Figure 6b, the data may also contain a key or unique ID number that matches the ID or key of the viewer 266. This matching of a unique key or ID number prevents unauthorized transfer of text data from the memory storage unit to an unauthorized viewer. Small memory devices such as smart cards, electronic memory cards or PCMCIA cards or memory sticks (personal computer memory card industry association) may also be used to store the data.

ii. Power Circuitry

As shown in figures 6b and 8, the library unit 262 may accept power from either AC wall power 610, DC power 640, or optional battery power 624. The power circuitry 610, 640 may provide all the voltage necessary from either the battery 624 or AC unit for the various circuitry in the library. The power circuitry 610, 640 may also provide power to the viewer 266 through a single data cable when connected to the viewer. The power circuitry 610, 640 will recharge the battery using AC power when in operation. With the optional battery unit 624 installed, the library unit 262 becomes a portable unit and can still provide power to the viewer 266. In order to extend battery life, power conservation measures may be utilized, such as shutting down the memory system when not in use. When the viewer 266

is being utilized and the library circuitry is not being utilized, virtually all power may be shut down to the library unit 262.

iii. Connection to the Public Telephone System

The connection to the telephone system may be provided by a modem 611. Various available modems may be used to perform this function. As shown in Figure 6b, cellular phone or PCN phone connections 611' may also be provided. When the home system 258 is first initialized, the modem may be used to transfer the name and credit card information of the consumer to the billing and collection system 278. The telephone connection 270 may be utilized each time an electronic book is purchased by a consumer to complete and record the transaction. The telephone connection 270 may also be used as a means for receiving the electronic books from the operations center 250 or from an Internet web site, by-passing the video distribution system 208. The phone connection 270 may be a separate unit as shown in Figure 6b.

iv. Library Processing

Figure 9 shows an example of some basic processing performed by the library unit 262 on the data stream 651 received from the video connector 212 or stripper circuit 617. First the data stream 651 is checked for error correction by block 650. If an error is detected, block 654 de-interleaves the data followed by block 658 running a FEC (Forward Error Correcting) algorithm. The combination of block 650, 654 and 658 perform the error correction needed on the data stream. If no error correction is necessary the data proceeds to block 662 where packets are individually checked for packet address.

If the address is a unique address, block 666 checks whether the address of the packet matches the library box ID number. The library box ID number is a unique number associated with that library unit 262 which is used to ensure security of the data. Block 670 determines whether an electronic file has already been opened into which the data packet can be saved. If no data file has been opened then block 674 opens a new data file for that packet. If an electronic file has been opened, then the packet is saved in that electronic file on disk, block

678. Next, the process checks to see if this is the last packet for a particular book for a particular textual data block being received 682. If it is the last packet of information, then the electronic file is closed and the directory of available electronic files is updated 686. Following either block 682 or 686, the process returns to receive another data packet from the data stream received from the data stripper block.

If the packet address is checked and the address is determined to be a broadcast address, the process determines the type of message that is being sent 690. The message may be an index of book titles, menu (and menu graphics) information, announcements, special offerings, discounts, promotions, previews etc. The message is then stored in appropriate electronic message file 694 and the process is returned to block 650 to receive another data packet and perform another error check.

Using the process of Figure 9, the library unit 262 is able to receive, store and update directories related to the textual data and graphical data (that can be used to depict pictures in a given book or to generate menus). Variations of the processes are possible depending on the format of the data and operating system of the library unit 262.

Figure 10 shows an example of the processing of information requests from the viewer 266 at the library unit 262. Information requests from the viewer 266 are received either through the cable connecting the viewer 266 to the library unit 262 or through wireless transmissions such as RF. It is possible in some embodiments for subscribers' requests to come from a set top converter box 602 (see Section V).

Information requests received from the viewer 266 generally fall into three categories: (1) directory data of electronic books stored in the library unit 262, (2) index of all available electronic books on the system, and (3) requests for a specific electronic book (Block 700). A get directory process 704 answers a request from the viewer 266 for a directory of data showing the electronic books stored at the viewer 266. The directory of data is sent to the viewer 266 so that it may be displayed to the subscriber. A get index process 708 handles requests from the viewer 266 for an index of all available electronic books on the home system

258. The library unit 262 will obtain an index of all the available books on the system and transmit that index, process 712, with menu information to the viewer 266. An open file process 716 replies to a request from the viewer 266 for a specific electronic book. The library unit 262 opens an electronic file for the specific electronic book requested by the viewer 266 and transmits the record or transmits the information 720 on a packet-by-packet basis to the viewer 266. This process of transmitting the specific electronic book, record, or packets to the viewer 266 continues until the last record or packet has been sent, 724.

In addition to the processes shown on Figure 10 in handling a request for a specific electronic book, the library unit 262 also orders and receives specific electronic books from the operations center 250 using the process as described in the open file process 716. Following a request for a specific electronic book which is not stored at the library unit 262, the library unit 262 will proceed to determine the next available time the electronic book will be on the video distribution system 208 and ensure reception and storage of that electronic book (process not shown). In performing this process the library unit 262 will transmit to the viewer 266 information on when it will obtain the text data for the electronic book so that the subscriber may view the electronic book. In addition to timing information, price and other ordering information may also be passed by the library unit 262 to the subscriber.

c. The Viewer

Figure 11 is a block diagram of the viewer 266 showing its internal components. The viewer 266 of Figure 11 is similar to the viewer 266 depicted in Figure 6b. The viewer 266 is designed to physically resemble a bound book. The viewer 266 is made up of several primary components and several optional components: (1) LCD display 602, (2) digital circuitry (not shown), (3) video graphics controller 607', (4) controls 740, (5) book memory 728, (6) optional power supply circuitry 736, (7) optional battery 603', (8) optional RF transceiver 604, (9) optional cellular or mobile communicator (608), (10) optional keyboards 267 and 268,(11) a speaker 633, and (12) a microphone 634.

(1) A high resolution LCD screen 602, preferably of VGA quality, is used by the viewer 266 to display text and graphic images. The screen is preferably the size of one page of a book. A two page screen or two screens may also be used with the viewer 266.

(2) Digital circuitry that includes a secure microprocessor 621, instruction memory 732, and digital logic. Data is transferred to the viewer 266 in compressed and encrypted format. The secure microprocessor 621 compares the ID number of the viewer 266 with the incoming data stream and only stores the text data if the ID number of the viewer 266 matches that within the incoming data stream. It is preferred that the viewer 266 not output text data or other data and that the data is decompressed and decrypted only at the moment of viewing and only for the current page being viewed. These measures are preferred because they provide additional security against unauthorized access to data.

(3) A video graphics controller 607' that is capable of assisting and displaying VGA quality text and graphic images is included in the viewer 266. The graphics controller 607' is controlled by the digital circuitry described above. Text may be displayed in multiple font sizes.

(4) The viewer 266 of Figure 11 has touch panel controls 740. These unique and novel controls 740 allow the consumer to select stored electronic books and electronic books from catalogues, move a cursor, and turn pages in a book. Typically, preferred controls 740 include forward and reverse page buttons 742, 741, a ball (or trackball) 743 for cursor movement, one or more selection buttons 745, a current book button 747 and a bookmark button 749 (see Figure 14a).

The controls 740 should be easy to use and conveniently located. Referring to Figure 14a, the controls for the viewer 266 may be located below the screen 602 at the bottom portion of the viewer 266. The next page turn button 742 is the most used button 740 and may be located towards the right edge of the page. The subscriber is likely to use right hand thumb movements to work the controls particularly the page turn buttons 741, 742. Therefore, it is preferred that the buttons be arranged in such a manner that the buttons are easily controlled

by a subscriber's right thumb. Generally, this can be accommodated either on the lower portion of the viewer 266 (as shown) or along the right hand margin of the viewer 266 (not shown). The current book button 747 and bookmark button 749 are usually the least used of the controls 740. Therefore, in the example shown those buttons 747, 749 are located on the inside portion towards the binder of the viewer 266.

Locating the ball 743 or other cursor movement device (such as four pointer arrows -- not shown) in the bottom center of the viewer 266 is both easier for the subscriber to use and easier in manufacturing the viewer 266. The selection buttons for the cursor 745 are preferably located below the middle diameter of the cursor ball 743 on the right and left sides of the ball as shown. If pointer arrows are used for cursor movement, a selection button 745 may be located in the center of the four arrow buttons (not shown). Again, the most used controls should be located where a subscriber's right hand thumb would normally rest.

(5) Book memory 728 for at least one electronic book or more of text is included in the viewer 266. The memory 728 stores text and any graphics which represent pictures in a book. The memory 728 can also store menu graphics data. Two different memory 728 devices may be used in the viewer 266, one for the instructions for the microprocessor 621 in the digital circuitry and a second type of memory may be used for the book memory 728 (and graphics). Various memory devices available on the market may be used such as, ROM, RAM or a small hard disk. Since an electronic book requires approximately 0.6 megabytes of storage, a small hard disk providing approximately 60 MBytes of storage provides memory to store approximately 100 electronic books. The large hard disk drives currently available allow for storage of thousands of electronic books.

Text for books may be displayed in various font sizes. To accommodate various fonts for display, a variety of fonts are stored in instruction 732 or book memory 728. Thus larger or smaller fonts may be recalled from memory 621, 728 to create displays desired by the subscriber.

(6) Power supply circuitry 736 in the viewer 266 will accept power from either an AC power source or from an optional battery 603', or the library unit 262. The power supply circuitry 736 provides the necessary voltages to accommodate the various systems within the viewer 266.

(7) An optional battery 603' is provided in a preferred embodiment. The battery 603' is automatically recharged when AC power is available.

(8) An optional RF transceiver 604 which provided two-way data link between the viewer 266 and other components of the home system can also be included in the viewer 266.

(9) Also, the viewer 266 may include a cellular transceiver for mobile communications.

(10) The optional wired (attached) keyboard 267 and wireless (e.g., RF) keyboard 268 (see Figure 6a) may be used with the viewer 266 to provide communications between the subscriber and the viewer 266.

(11) and (12) The speaker 633 and the microphone 634 allow the viewer 266 to provide audio signals to the subscriber, and allow the subscriber to provide an audio input. The speaker 633 and the microphone 634 may be used in conjunction with the cellular transceiver 608 or other telecommunications equipment to provide for reception and transmission of telephony and data.

The viewer 266 of Figure 11 has parts available for providing connections to: a library 744, electronic card memory 748, CD ROM units 752, and a portable memory unit 756 (such as that shown in Figure 6b 600'). Various electronic memory cards such as PCMCIA can be used with this viewer 266.

Security, low power consumption and excellent display technology are desired features of the viewer 266 design. The viewer 266 should be lightweight and portable. The viewer 266 contains a software operating system that allows electronic books to be stored, read and erased and includes the capability to order electronic books and retain them in memory 728

for a predefined period of time determined by the system operator. The software can be configured to allow the electronic book to be read during a period of time (i.e., two weeks) and then automatically erased, read once and erased, or held in memory permanently. Each viewer 266 has a unique key 605. All of the data storage is encrypted with the key 605 for an individual viewer 266 to prevent more than one viewer 266 accessing the text file or electronic book file.

Figure 12 is a flow diagram of some of the processes executed by the viewer 266. Generally, the viewer 266 receives inputs from the subscriber through touch panel controls 740. Alternately, the viewer 266 receives inputs from a touchscreen display, the attached keyboard 267, or the remote keyboard 268. The subscriber's information requests are then processed through an information request process 800 by the viewer 266.

If the subscriber requests a menu of available electronic books, a select available book process 804 will select a book menu. An open file process 808 will open the electronic files which list the electronic books that are available (related to the category of topic of the menu) and display the menu with the names of the available electronic books.

If the subscriber selects a particular electronic book to read, then a select a book process 812 will process the selection and determine the electronic file that contains the specific electronic book. An open file process 816 will open the file for that specific book and normally access the first page. (If a pointer has already been set in that electronic book's file, the process may default to that page.) A decision process 820 will then determine which page needs to be displayed. The decision process 820 will determine whether a next page, previous page or a book marked page needs to be displayed. If the pointer for the electronic file is not in the correct location then a get previous page process 828 will move the pointer and obtain the previous page of data from the stored file. Otherwise, a get next page process 824 will normally obtain the next page of text from the stored electronic file. A decrypt and decompress process 832 will decrypt and decompress the text data and send the data to the video display. The video display will generally have a video display memory associated with it and the decrypt

and decompress process 832 will send the data directly to that video display memory. The circuitry for the display then completes the process of displaying the page of text.

If the subscriber, through the controls 740, requests (from the information request process 800) that the power be turned off, then a process, 836, of turning the power off will be initiated. A save pointer process 840 saves the pointer in memory to the page number in the book that the viewer 266 is currently reading. A close files process 844 closes all the electronic files and signals the power circuitry to shut down the power to the various circuits in the viewer 266. The subscriber may also use the controls 740 to access other electronic files using electronic links embedded in a particular electronic file. An electronic link system will be described later in detail.

With these examples of basic processes the viewer 266 is able to display book selections and display text from those books.

d. Menu System

Referring generally to Figure 13, the delivery system 200 may have a menu system 851 for selecting features and electronic books from the delivery system 200. The operating software and memory required for the menu system 851 may be located at the viewer 266 (e.g., the instruction memory 732 and/or book memory 728). However, it may also be located at the library unit 262 (e.g., the instruction memory 632) or the library unit 262 and the viewer 266 can share the software and memory needed to operate the menu system 851. Since the menus are usually displayed on the viewer 266 and it is preferred that the viewer 266 be capable of operating in the absence of the library unit 262, the basic software and memory to create the menus is more conveniently located at the viewer 266.

The menu system 851 allows sequencing between menus and provides menu graphics for graphical displays such as on the LCD display 602 of the viewer 266. In a system which uses a set top converter these menus may also be displayed on a television screen. In the simplest embodiment, the menus provide basic text information from which the subscriber

makes choices. In more sophisticated embodiments, the menus provide visual displays with graphics and icons to assist the subscriber.

Figure 13 depicts a menu system 851 with sequencing. The primary menus in the system are an introductory menu 850, a main menu 854 and various submenus 858. In the embodiment shown, there are three levels of submenus 858. In certain instances one or two submenus 858 is sufficient to easily direct the subscriber to the selection or information requested. However, there are features in which three or more submenus 858 make the user interface more friendly for the subscriber. Each level of submenus 858 may consist of multiple possible menus for display. The particular menu displayed depends on the selection by the subscriber on the previous shown menu. An example of this tree sequence of one to many menus are the help submenus 887, 888. Depending upon the specific help requested, a different level two help menu is displayed to the subscriber.

An example of an introductory menu 850 is shown on Figure 14a. Generally the introductory menu 850 introduces the viewer 266 to the system and provides initial guidance, announcements and instruction. The introductory menu 850 is followed by a main menu 854, an example of which is shown in Figure 14b. The main menu provides the viewer 266 with the basic selection or features available in the system. Figure 14b is an example of a main menu 854 offering many additional features and submenus 858 to the subscriber. For example, Figure 14b shows that the viewer 266 is able to choose by a point and click method, many options including: (1) free previews, (2) books you can order, (3) books in your library, (4) your current book, (5) help, (6) on-line services and (6) other system features. Following a selection on the main menu 854, a corresponding submenu 858 is shown.

Figure 13 shows thirteen available primary or first level submenus. They are (1) account set up 862, (2) free previews 866, (3) book suggestion entries 855, (4) books in your library 872, (5) books you can order 878, (6) your current book 884, (7) help 887, (8) available features 890, (9) messages 893, (10) account information 896, (11) outgoing message submenu 898, (12) show links 970, and (13) create links 980. Figure 14c is an

example of a first level submenu for electronic books in your library 872. This "Book In Your Library" example submenu 872 shows six available electronic books by title and author and provides the subscriber with the ability to check a different shelf of books 874 or return to the main menu 854. Figures 14d and 14e show example submenus 858 for electronic books that may be ordered using the "Books You Can Order" submenu 878.

Figure 14f is an example of an order selection and confirmation menu 880', which provides a "soft keyboard" 975 for the subscriber to use in placing an electronic book order and which confirms the subscriber's order. In this particular example, the subscriber is required to enter a PIN number to complete the subscriber's order. The "soft keyboard" 975 could be configured as a full alpha-numeric keyboard, and may be used by the subscriber to add additional information related to a book order. An alpha-numeric or similar password may be used to ensure the subscriber is an authorized subscriber. In an embodiment, the subscriber confirms an order with a PIN or password and then receives a final confirmation screen. The final confirmation screen is primarily text and may state:

Your book order is now being processed via CABLE.

Your book will be delivered overnight and your VISA account will be charged $2.95.

Your book will be available for reading at 6:00AM EST tomorrow. Make sure that:

1. your Library Unit and Cable Connection Unit are plugged in with aerials up tonight; and
2. you tune your cable converter to THE BOOK Channel. The TV set does not have to remain on.

or similar language.

Examples of the "Account Set Up Menu" 862 and further submenus 858 related to account set up (which provide instructions and account input 864) are shown in Figures 14g and Figure 14h. These submenus 858 allow initialization of an account at the operations center 250 and orders to be charged to credit cards. The submenus 858 include the ability to enter data related to your desired PIN number or password, credit cards, phone numbers, etc. It

is preferred that the account set up be performed using the telephone system. A confirmation menu verifies that the account has been properly set up with the desired PIN or password and credit card.

Free previews for books 866 are also provided by submenus (868, 870). Examples of the free preview menus are shown in Figure 14i and Figure 14j. Figure 14i shows a menu depicting various electronic books for which previews are available for viewing. Following an electronic book selection, a screen submenu showing an excerpt of the selected electronic book cover's description is provided along with an excerpt from a critic's review of the selected electronic book. In a preferred embodiment, this preview screen for a particular electronic book also allows the subscriber to select a submenu which provides information about the author. The book preview submenu may also include a still video picture or graphics portraying a book cover or a scene from the electronic book. An example of such a still video picture or graphics is shown in Figure 14j which depicts a preview screen 870 about the author. The video may also be provided according to MPEG standards as a short moving video clip. Such a clip could be an interview with the author, for example. The author's preview screen 870 shows a picture of the author, provides a short biography, and may allow the subscriber to order the author's books. The price for ordering the authors various electronic books may also be shown on the menu. Alternatively, the previews may be provided through an electronic link system, which will be described in detail later.

In addition to free previews, in more sophisticated embodiments, the delivery system 200 provides the subscriber with an electronic book suggestion feature (see 855). This is accomplished using the menu system 851 and the processor with associated memory located at the viewer 266, library unit 262 or at the distribution point (1020 or 250). When necessary, information for the program suggestion feature is sent in the text data of the composite or video signal to the home system 258. With this feature, books or authors are suggested to a subscriber based upon historical data of the subscriber's previous orders, demographics or mood of the subscriber, other indicators, and/or by text word searches.

In a book suggestion embodiment, text word searches of preview information (such as book cover descriptions, critics reviews and biographies about the author) and/or text of books or other titles are performed by the library unit 262 using databases stored in the library memory 600. Personalized book or author suggestions are made to the subscriber by obtaining information from the subscriber indicative of general subscriber interests. Subscriber entries are solicited from the subscriber preferably using the electronic book suggestion entries submenu 855. The system uses these subscriber entries either directly or indirectly to search for books or authors to suggest to the subscriber.

Generally, the book suggestion methods may be categorized into two categories, either responsive methods (which respond to a series of subscriber menu entries), or intelligent methods (which analyze data to suggest an electronic book). Using a responsive or intelligent method, the delivery system 200 determines a list of suggested titles or authors and creates a second or third level submenu 856, 857 to suggest the titles for subscriber selection.

Responsive methods of suggesting titles include, for example, the use of mood questions, searching for authors, and keyword searching. Using the instruction memory 732 and menu generation hardware (e.g., 607) of the viewer 266, a series of mood questions can be presented on menus to determine a subscribers interest at a particular time. For this methodology, the operations center's 250 processor 404 and instruction memory 416 assign each title mood indicators (and subindicators) from a group such as light, serious, violent, short, long, dull, exciting, complex, easy-read, young theme, old theme, adventure, romance, drama, fiction, science-fiction, etc. These indicators are sent to the home system 258 with the text data and are stored in library memory 600. Based upon the subscriber entries, the processor 404 associates a set of indicators with the subscriber's request and a set of electronic books with matching indicators are located for suggesting to the subscriber.

Responsive searches for authors or keywords (a search word provided by the subscriber) are generally performed by the library processor 628 and instruction memory 632 on data stored in the library memory 600. For example, a keyword given by the subscriber

may be searched for a match in library memory 600 storing the book reviews, critics and previews databases. Thus, if a subscriber provided an entry of the word "submarine" on an appropriate submenu, the title "Hunt For Red October" may be located by the library processor 628 using instruction from a routine in the instruction memory 632.

Intelligent methods of suggesting programs include analyzing personal profile data on the subscriber and/or historical data about the subscriber such as past books ordered by the subscriber (or buy data). This method is preferred in a book on demand system and can be performed at the distribution point or operations center 250 by the on-site processor 404 using subscriber databases stored in memory 428. The home system 258 receives the text data including program suggestion information from the distribution point or operations center 250 and generates the program suggestion submenus 855, 856, 857 using the same text data receiving 212 and viewer menu generation hardware (e.g., 607, 621) described above. Software routines and algorithms stored in instruction memories (e.g. 632, 732) are used to analyze historical data and book ordered data to determine a line of books to suggest to the subscriber.

The algorithms for this powerful feature of suggesting books or authors to subscribers are disclosed in great detail in U.S. Patent No. 5,559,549, entitled REPROGRAMMABLE TERMINAL FOR SUGGESTING PROGRAMS OFFERED ON A TELEVISION PROGRAM DELIVERY SYSTEM, issued September 24, 1996, and are incorporated herein by reference.

Referring to Figure 13, submenus 858 are shown on the "Books In Your Library" submenu 872 and are preferably broken into shelf numbers with submenus for each shelf 874, 876. The submenus 858 for the "Books You Can Order" submenu 878 is similarly broken out into submenus by shelves 880, 882. These shelves may each be a category or genre of books. Electronic books may be grouped into categories such as best sellers, novels, fiction, romance, etc. See Figure 14d.

Referring to Figure 13, the submenu 858 for "Your Current Book" 884 allows a subscriber to select a current book 884 and then determine what page to view. This selection is confirmed with a level two submenu 885. The help submenu 887 provides the subscriber with additional help screens 888. The submenus 858 for available features 890 are preferably broken out into a sequence of separate submenus for each feature 891, 892.

Referring to Figure 13, messages can also be sent with the delivery system 200. A level one message screen provides the subscriber with the ability to select from various messages the subscriber has pending 893. Each message is then shown on a separate submenu screen 894, 895. The message may contain text and graphics.

Referring to Figure 13, account information is shown on a level one submenu 896 and then follow-on submenus 858 show the recent orders and your account balance 897. There is also a level one submenu for outgoing messages 898 which has a follow-on submenu used as an input screen 899.

In addition to the specific features and submenus described in Figure 13 and Figure 14a through Figure 14j, many other variations and features are possible. When a book is finally selected for viewing the title page 886 will appear on the screen followed by a page of text.

III. <u>The Billing And Collection System</u>

The billing and collection system 278 (shown in Figures 2 and 3) utilizes the latest technology in electronic transaction and telephone switching to track orders, authorize deliveries, bill consumers, and credit publishers automatically. The telephone calls initiated by the phone connector 270 are received by the billing and collection system 278 which responds immediately without human intervention by placing the order and charging the consumers credit card account. Data is compiled periodically and publishers 282 are credited for sales of their books or other text. The billing and collection system 278 may also connect with subscribers through two-way cable connections, cellular, or other communication means.

It is preferred that the billing and collection system 278 communicate with the operations center 250 to track changes in available books and to provide statistical data to the operations center 250.

IV. Public Library, School, and Bookstore System

The electronic book system can be modified to be used at public libraries, schools and bookstores. Figure 15 shows one possible arrangement of components for a public library, school or bookstore location. The main unit at a public library, school or bookstore is the file server 900. The file server 900 is a large electronic memory unit that can store thousands of electronic books. Various electronic storage means may be used in the file servers, such as hard disks, read-write CD ROMs and read-only CD ROMs.

The system comprises five components; the file server 900, a converter or video connector 904, a controller 908, a viewer 912, and a catalog printer 916. The software for controlling the system is primarily located in the controller 908. The converter or video connector 904 is similar to those described above. In this configuration the controller unit 908 monitors the data being transferred to the file server 900 by the converter 904. The controller 908 is preferably provided with a viewing screen and several control buttons. When it is necessary to have a larger screen to perform more sophisticated controlling of the system a viewer 266 may be connected to the controller 908 and the viewer screen and controls 740 may be used.

The controller 908 is only able to download books to public viewers 912 which are authorized to receive books from the particular file server 900. For security reasons it is not desirable that the public viewer 912 have access to more than one file server 900. In this way, security can be maintained over the text data for books. It is preferred that the public viewer 912 be limited to receiving one or two electronic books at a time from the controller 908. When the subscriber of the public viewer 912 needs a new or additional electronic book, the subscriber returns the viewer 912 to the school or public library where the subscriber receives a new electronic book from the controller 908.

In order to track the electronic books that are available on the file server 900, the titles of the available books may be printed on a catalog printer 916. The catalog printer 916 is connected to the library controller 908 and the titles of the electronic books are downloaded to the catalog printer 916. None of the coded text for any of the electronic books can be printed using the controller 908 and catalog printer 916 of this system. In order to maintain security over the data, none of the electronic book data is allowed to be downloaded to the printer 916. Once a complete printout of available electronic book titles, magazines, or other textual material is complete, a hard copy of the catalog 920 can be maintained at the file server 900.

The system shown may also be used at bookstores. The bookstores can rent the public viewer 912 to customers with the text for one or two electronic books loaded onto the public viewer 912. The public viewer 912 may be provided with an automatic timeout sequence. The timeout sequence would erase the textual data for the books after a certain period of time, for example, two weeks. It is expected that after a period of time (perhaps within two weeks) the renter would return the public viewer 912 to the bookstore and receive additional electronic books for viewing. Using this arrangement, it is also possible for the bookstore to (permanently) sell a viewer 912 to a regular customer. The customer then returns to the bookstore from time to time to receive textual data for an electronic book which the customer can then store permanently on the customer's own viewer 912. Various other configurations are possible for bookstores, schools and public libraries using the file server 900 and public viewer 912 described.

V. Use of a Set Top Converter

Existing set top converters such as those made by Scientific Atlanta or General Instruments are presently unequipped to handle the delivery system 200 of the present invention. Although set top converters may be built which include the library functions, hardware modifications are necessary in order to use the delivery system 200 with existing set top converter technology.

Figures 16a and 16b are examples of hardware modifications or upgrades. A port is used to attach hardware upgrades described below to a set top terminal. Two upgrades are possible to set top converters 601 to assist in receiving and selecting electronic books. A menu generation card upgrade (Figure 16a) and an information download unit (Figure 16b). Each of these upgrades may be connected to the set top terminal unit through an upgrade port. A four wire cable, ribbon cable, IEEE 1394 firewire interface, USB interface, or the like may be used to connect the upgrade to the set top converter 601.

A card addition 950 to a set top converter 601 is depicted in Figure 16a. The card 950 shown provides the additional functionality needed to utilize the book selection system with existing set top converter 601 technology. The card 950 may be configured to slip inside the frame of a set top terminal and become part of the set top terminal, an advanced set top terminal. The primary functions the card 950 adds to the set top converter 601 are the interpreting of data signals, generating of menus, sequencing of menus, and, ultimately, the ability of the subscriber to select an electronic book using either the television or a viewer 266. The card 950 also provides a method for a remote location, such as the cable headend, to receive information on electronic books ordered. The electronic books ordered information and control commands may be passed from the cable headend to the card 950 using telephone lines.

The primary components of the card 950 are a PC chip CPU 952, a VGA graphic controller 954, a video combiner 956, logic circuitry 958, NTSC encoder 960, a receiver 962, demodulator (not shown), and a dialer 611'. The card 950 operates by receiving the data text signal from the cable headend through the coaxial cable. The logic circuitry 958 of the card 950 receives data 964, infrared commands 966, and synchronization signals (not shown) from the set top converter 601. Menu selections made by the viewer 266 on the remote control are received by the set top converter's 601 IR equipment and passed through to the card 950. The card 950 interprets the IR signal and determines the electronic book (or menu) the subscriber has selected. The card 950 modifies the IR command to send the information to

the set top converter 601. The modified IR command contains the channel information needed by the set top converter 601. Using the phone line 968 and dialer 611', the card 950 is able to transmit electronic books ordered information to the cable headend. It is also possible to receive the electronic books over the telephone lines and by-pass the video distribution system. In this embodiment, the telephone system may be used to provide access to an Internet web site to order and receive electronic books.

These commands are passed through the interface linking the set top terminal's microprocessor with the microprocessor of the hardware upgrades. In this way, subscriber inputs, entered through the set top terminal keypad or remote control, can be transferred to any of the hardware upgrades for processing and responses generated therein can then be sent back to the set top terminal for display. In a preferred embodiment the IR commands 966 are transferred from set top terminal 601 to hardware upgrade.

Hardware upgrades may include a microprocessor, interactive software, processing circuitry, bubble memory, and a long-term memory device. In addition to these basic components, the hardware upgrade may make use of an additional telephone modem or CD-ROM device.

The information download hardware upgrade 1001 (shown in Figure 16b) allows the subscriber to download large volumes of information from the operations center 250 or cable headend using the set top converter 601. The hardware upgrade 1001 will enable subscribers to download data, such as electronic books and magazines, to local storage. Primarily, the hardware upgrade 1001 is an additional local storage unit 1003 (e.g., hard disk, floppy, optical disk or magnetic cartridge and may include a microprocessor 1005, instruction memory 1007, and a random access memory 1009, as shown in Figure 16b). Preferably, a small portable viewer 266 is also provided with the upgrade 1001 to enable downloaded text to be read without the use of a TV.

The downloadable information may be text or graphics supplied by the operations center 250 or cable headend. With this upgrade, electronic books may be downloaded and

read anywhere with the portable viewer 266. Using this upgrade, books may be downloaded and stored in compressed form for later decompression. The electronic books would be decompressed only at the time of viewing. Important text that the public desires immediate access may made available through this system. Text such as the President's speech, a new law, or a recent abortion decision rendered by the Supreme Court may be made immediately available.

In one embodiment, electronic book ordering information is stored at each set top terminal until it is polled by the cable headend using a polling request message format. An example of a polling request message format consists of six fields, namely: (1) a leading flag at the beginning of the message, (2) an address field, (3) a subscriber region designation, (4) a set top terminal identifier that includes a polling command/response (or P/F) bit, (5) an information field, and (6) a trailing flag at the end of the message. A similar response frame format for information communicated by the set top terminal to the cable headend in response to the polling request may be used.

Figure 17 shows a preferred set top converter that includes a data receiver 617' and a data transmitter 1011. The data transmitter provides upstream data communications capability between the set top converter 601 and the cable headend. Upstream data transmissions are accomplished using the polling system described and, using a data transmitter 1011. Both receiver 617' and transmitter 1011 may be built into the set top converter 601 itself or added through an upgrade module. Regardless of the specific hardware configuration, the set top terminal's data transmission capabilities may be accomplished using the hardware shown in Figure 17.

Figure 17 shows RF signals, depicted as being received by a data receiver 617' and tuner 613 working in unison. Both of these devices are interfaced with the microprocessor 1013, which receives inputs 1015, from the subscriber, either through a set top converter's keypad, a remote control unit or the viewer 266. All cable signals intended for reception on the subscriber's TV are accessed by the tuner 613 and subsequently processed by the

processing circuitry 1017. This processing circuitry 1017 typically includes additional components (not shown) for descrambling, demodulation, volume control and remodulation on a Channel 3 or 4 TV carrier.

Data targeted to individual set top converters is received by the data receiver 617' according to each set top converter's specific address or ID. In this way, each addressable set top converter only receives its own data. The data receiver 617' may receive set top converter 601 specific data in the information field of the signal frame described or on a separate data carrier located at a convenient frequency in the incoming spectrum.

The received data includes information regarding electronic books and menus available for selection. The subscriber may enter a series of commands 1015 using a keypad or remote control in order to choose an electronic book or menu. Upon receipt of such commands, the microprocessor 1013 instructs the tuner to tune to the proper frequency of the channel carrying data and subsequently instructs the processing circuitry 1017 to begin descrambling of this data.

Upon selection of the electronic book, the microprocessor 1013 stores any selection information in local memory (not shown) for later data transmission back to the cable headend. The microprocessor 1013 coordinates all CATV signal reception and also interacts with various upstream data transmission components. Typically, the data transmitter 1011 operates in the return frequency band between 5 and 30 MHZ. In an alternative embodiment, the frequency band of 10 to 15 MHZ may be used. Regardless, however, of the frequency band used, the data transmitter 1011 sends information to the cable headend in the information field of the response frame described. Those skilled in the art will recognize that a number of variations and combinations of the above-described set top terminal hardware components may be used to accomplish upstream data transmissions.

VI. Books-On-Demand System

The electronic book system 200 described may also be configured in a book-on-demand style. Figure 18a shows one example of a configuration for a books-on-demand system. A books-on-demand system requires more powerful two-way communications

between the consumer's home, bookstore, school or public library and either the operations center 250 or a distribution site 1020 such as the cable headend. This type of two-way communication can be provided by the hardware shown in Figure 17 and described above.

Referring to Figure 18a, in a books-on-demand system, the subscriber selects the electronic book to be download from an available menu of electronic books (see for example Figures 14d and 14e). The data for menus of available books is usually sent to the subscriber location by the distribution site 1020. After the subscriber's menu selection, information about the subscriber selection (or request) is then communicated to either a distribution point 1020 (such as a cable headend or an Internet web site) or the operations center 250. Upon receipt of this request, the needed textual and graphical information for the book is spooled and sent to the subscriber. In this manner, books are only sent when requested by the subscriber and are sent immediately upon demand for the book (or text).

In order to support such a books-on-demand system, the text delivery and distribution must be conducted on a strong nodal architecture distribution system, such as, a video-on-demand cable or telephone television system, an Internet web site, or through use of individual telephone access on the public telephone system.

The books-on-demand system allows for a greater selection of electronic books to the subscriber and limits the amount of communicated book data that is unnecessary or unneeded. It also provides the electronic book to the subscriber in a much timelier fashion.

In addition to a stronger distribution system, a books-on-demand system requires a distribution point 1020 to have more sophisticated equipment to access and "spool out" the textual information. This can be accomplished using file server technology 1024 for storing the electronic books and ATM 1028 or telephone-type switching (not shown) to distribute the textual information. The file server 1024 and distribution technology that can be used in configuring such a books-on-demand system is described in U.S. Patent No. 5,262,875 and U.S. Patent No. 5,218,695, cited above.

Figure 18a shows an embodiment for a books-on-demand system that utilizes file server technology. In addition to electronic books, the embodiment of Figure 18a will support distribution of nearly any digital data. Electronic books or textual files are received from publishers 282 and other sources through local feeds 1032, ATM 1028, or by satellite dish 1036. The data is then stored in memory 1040 at the file server 1024. The distribution point 1020 may be a cable headend that receives requests from subscribers and delivers text to subscribers over a two-way communication system (such as a video-on-demand system (VOD) 1044). Alternately, an Internet web site may serve as the distribution point 1020.

The library unit 262 can be connected to either a basic premium-type service cable system 1048, a near video-on-demand type cable system (or pay-per-view (PPV) 1052) or a video-on-demand cable system 1044. In connecting with either of these three systems the library unit 262 may access the cable directly or may access the system through a set top terminal 601', 601", or 601'".

Using the two-way video-on-demand system 1044, a subscriber is able to request a specific electronic book title and receive that text immediately following its request. To accomplish this, the distribution point 1020 transmits a list of available electronic books through the cable delivery system to the library unit 262. The library unit 262 displays the list of available electronic books on a menu or similar format. As described earlier, it is preferred that the library unit 262 use menus which list categories of available electronic books to form its request from the distribution point 1020. After selecting an electronic book, the library unit 262 sends a request signal on the two-way communication system 1044 back to the distribution point 1020. This request signal can be handled in two ways. The library unit 262 either initiates the request or the distribution point 1020 polls the various libraries on to the two-way system 1044. Upon receiving the request for the electronic book title, the text associated with that book title is transmitted to the library unit 262 using the two-way cable system 1044.

Figure 18b is an expanded view of a preferred operations center 250 that supports a regional or national books-on-demand system. In fact, the operations center 250 shown

supports distribution of nearly any digital data. The operations center 250 supports multiple feeds to receive digital information by tape 1060, 1060', ATM 1028, or satellite 1036. The information is processed through an input MUX 1064 and a small file server 1068 before reaching the master file server 1072. Digital data such as electronic books received from publishers 282 is then stored on the master file server 1072. It is preferred that the digital data is stored compressed in a standard format such as MPEG2.

A system controller 1076 provides control over the regional or national books-on-demand system. Electronic books may be packaged into groups to provide feeds to various cable headends. In addition, scheduling and marketing research are conducted at the operations center 250. In order to handle the scheduling and market research, electronic book buy data is received at the operations center 250 through a multiplexer 1082. Electronic book buy information can be provided by the operation center 250 to the billing and collection system 278.

The operations center 250 is also equipped to insert messages or advertisements into the file server. These messages or advertisements will eventually be received by the subscribers.

The master file server 1072 uses an output multiplexer 1080 and ATM 1028 as well as satellite connections to distribute digital data. In a preferred embodiment, cable headends receive text data on electronic books from the master file server 1080 through the output multiplexer 1028 and an ATM system 1028. After receiving the electronic book data, the cable headends store the books in a local file server 1024. Figure 18a's distribution point 1020 is an example of a cable headend which may receive data from the operations center 250 of Figure 18b through an ATM hookup 1088 or satellite hookup.

VII. Voice Emulation Features for Electronic Books

Figure 19 is a diagram of a main menu screen 1100 for presenting on the viewer 266 voice emulation options for electronic books. Main menu 1100 may be displayed on the viewer 266 for permitting a user to select various options relating to voice emulation in

electronic books. Main menu 1100 has a number of sections for permitting the user to select the options by selecting an appropriate section. The term section refers to a definable portion of the screen, and the act of selecting a section may involve, for example, positioning the cursor or a pointer over the section using trackball 743 and depressing selection button 745 to "click on" the section; other cursor-control devices, including peripheral devices, may be used to select a section either by positioning the cursor or by entering a particular command. The sections in main menu 1100, and other described screens, may alternatively have different shapes and may be displayed in a different configuration than that shown. In addition, the screens may have more or fewer sections depending upon, for example, desired functions or displayed information. Also, main menu 1100 and the other described screens may be generated for display on the viewer 266, or retrieved from memory for display, by library processor 628 operating under control of software modules residing within the instruction memory unit 632 or by viewer processor 621 operating under control of software residing within the instruction memory 732, or by hardware modules, or a combination of hardware and software modules. A keyboard may be used with the viewer and key strokes may be used for commands. Alternatively, a soft keyboard may be displayed on the viewer 266 and may be used to enter commands.

A manual text-to-speech section 1102 permits the user to select an option to convert text within a displayed electronic book to corresponding speech. The phrase text-to-speech refers to conversion of text in electronic form to corresponding speech. An auto text-to-speech section 1104 with auto page turn permits a user to select an option to have the viewer continuously convert text to speech from page to page within an electronic book. An auto text-to-speech section 1106 with manual page turn permits a user to select an option to have the viewer 266 automatically convert an entire page of displayed text to speech. For the various text-to-speech conversion features, the viewer 266 may use speaker/microphone 608' to convert text in electronic form to corresponding speech.

A view book section 1108 permits a user to select an option to view an electronic book. A settings section 1110 permits a user to select an option to view a settings menu and enter various parameters relating to the voice emulation features. Settings are various parameters relating to controls of an electronic book and associated functions. A dictation section 1112 permits a user to select an option to perform dictation into an electronic book. The term dictation refers to conversion of speech to corresponding text in electronic form capable of display on a viewer or other display device.

Figure 20 is a flow chart of a main menu process 1120 for processing options selected by a user in main menu 1100. Main menu process 1120 may be implemented within the viewer 266, the library 262, or a combination; for example, it may be implemented by software modules residing within the instruction memory unit 632 for execution by the library processor 628 or within the instruction memory 732 for execution by the viewer processor 621, or by hardware modules, or a combination of hardware and software modules. A display process 1122 displays main menu 1100 on the viewer 266, and a select process 1124 receives a user's selected option within main menu 1100. A decision process 1123 determines if a voice security function has been activated and, if so, main menu process executes a voice security routine 1125, further explained below. Voice security is a feature permitting only users with a particular voice pattern or characteristic to have access to content of the viewer 266 or electronic books stored within the viewer 266 or library 262. As a result of voice security routine 1125, an authorization routine 1127 determines if the user has authorization for the requested function.

If the user has authorization, an option process 1126 executes processing for the selected option. In particular, depending upon which option the user selected, various routines are performed. If the user selected manual text-to-speech section 1102, a speech process 1128 executes a manual text-to-speech routine 1130. If the user selected auto text-to-speech section 1104, a speech process 1132 executes an auto text-to-speech (auto page turn) routine 1134. If the user selected auto text-to-speech section 1106, a speech process 1136 executes

an auto text-to-speech (manual page turn) routine 1138. If the user selected setting section 1110, a settings process 1140 executes a settings routine 1142. If the user selected dictation section 1112, a dictation process 1144 executes a dictation routine 1146. If the user selected view book section 1108, a view book process 1148 executes a view book routine 1150.

Figure 21 is a flow chart of manual text-to-speech routine 1130. Manual text-to-speech routine 1130 may be implemented within the viewer 266, the library 262, or a combination; for example, it may be implemented by software modules residing within the instruction memory unit 632 for execution by the library processor 628 or within the instruction memory 732 for execution by the viewer processor 621, or by hardware modules, or a combination of hardware and software modules. In routine 1130, a display process 1160 displays a book menu. Figure 22 illustrates a book menu screen 1190 for display on the viewer 266 and for displaying a book menu on the viewer 266. Book menu screen 1190 includes sections 1192, 1194, and 1196 identifying stored electronic books. A selection process 1162 receives a user's selected electronic book from book menu screen 1190, and a display process 1164 displays the selected electronic book on the viewer 266. A user may select an electronic book by positioning the cursor on a section identifying the electronic book and selecting the section or by entering a particular command. In using a voice commands mode, a user may speak the title of a particular electronic book, or other identifying information, in order to select it.

Figure 23 illustrates a text screen 1200 for display on the viewer 266 and for displaying a page of an electronic book. The text screen 1200 also includes various sections for a user to enter commands. In particular, a user may select a page section 1208 and enter a page number into the section in order to jump to another page of the displayed electronic book. The user may select page turn sections 1210 and 1212 to page backward and forward, respectively, in the displayed electronic book. The user may select a convert section 1206 to convert selected text to speech and select a pause section 1202 and a resume section 1204 to pause and resume, respectively, the text-to-speech with manual page turn conversion. A

define section 1207 permits the user to receive definitions, in speech form, of words selected in the text.

A display pages process 1166 displays pages of the electronic book as selected by the user by selecting, for example, a page section 1208 and page turn sections 1210 and 1212. An indication process 1168 indicates any text selected by a user. Figure 24 illustrates an example of selected text 1214 in the text screen 1200. Although selected text is shown as shaded in the text screen 1200, selected text may be indicated in other ways such as by showing it underlined, in a different color than surrounding text, in reverse video, in a different font than surrounding text, in bold, or in another manner that distinguishes the selected text from surrounding text or information. A selection process 1170 receives the user's selection of convert section 1206 and, in response, a decision process 1172 determines if the user has selected text. If no text is selected, a display process 1174 may optionally display an error message indicating that text must be selected for conversion to speech in this mode. If text is selected, a conversion process 1176 converts the selected text to speech using, for example, a text-to-speech conversion program. Text-to-speech conversion programs are known in the art and examples include those programs disclosed in the following U.S. patents, which are incorporated herein by reference: U.S. Patent 5,848,390, entitled SPEECH SYNTHESIS SYSTEM AND ITS METHOD; U.S. Patent 5,774,854, entitled TEXT TO SPEECH SYSTEM; U.S. Patent 5,682,501, entitled SPEECH SYNTHESIS SYSTEM; U.S. Patent 5,220,629, entitled SPEECH SYNTHESIS APPARATUS AND METHOD; and U.S. Patent 5,113,449, entitled METHOD AND APPARATUS FOR ALTERING VOICE CHARACTERISTICS OF SYNTHESIZED SPEECH. Other examples include products developed by the AT&T Advanced Speech Products Group. The Advanced Speech Products Group can be accessed at www.research.att.com/projects/watson/index.html.

Alternatively, underlying pointers tied to text can correspond to pointers in a pre-recorded and stored audio version of the text, avoiding the need for real-time text-to-speech conversion. In that example, an electronic book file may contain both the text and

corresponding audio files or links to them. The audio files or links to them may be stored within a header file for each electronic book. The information contained in the header file is used to identify and categorize each electronic book for display and other purposes, such as searching. As new electronic books are loaded on the viewer 266 or library unit 262, this header information is extracted from the header file and stored in a database resident on the viewer 266 or library unit 262, such as in memory 600 or 600'.

The header information associated with each electronic book typically includes the information shown in Table 1 and can be stored, for example, in records or other database structures. The header file may contain a field for storing an audio file corresponding to text in the electronic book, and may alternatively contain a field identifying a link to such an audio file. The audio files may contain an audio version of the entire text of the electronic book or a portion of it. In addition, multiple audio files may be used for discrete elements or portions of text in the electronic book, and may potentially be linked together based upon text selected by a user for conversion to corresponding speech or audio.

Table 1

Title:		
Authors:		
	Primary Author:	
	Author 2:	
	Author 3:	
	Author 4:	
	Author 5:	
ISBN #:		
Library of Congress # (LC#)		
Dewey Decimal Classification # (DDC#)		
Publisher:		
Edition Number:		
Date of Publishing:		
Related Categories:		
	Category 1	Category 6
	Category 2	Category 7
	Category 3	Category 8
	Category 4	Category 9
	Category 5	Category 10
Related Keywords:		
	Keyword 1	Keyword 6

Keyword 2	Keyword 7
Keyword 3	Keyword 8
Keyword 4	Keyword 9
Keyword 5	Keyword 10

User Defined Criteria 1:
User Defined Criteria 2:
User Defined Criteria 3:
User Defined Criteria 4:
User Defined Criteria 5:
Book Summary/Description:
User Entered Notes:
Audio file:
Link to audio file:

During the conversion, a selection process 1178 detects if the user has selected pause section 1202. In response, a halt process 1180 stops the text-to-speech conversion of the selected text. When the user selects a resume section 1204, as detected by a selection process 1182, the conversion process 1176 resumes the text-to-speech conversion of the selected text at a point where it was stopped. A decision process 1184 determines if the user has closed the displayed electronic book and, if so, a return process 1186 returns to the main menu to the display screen 1100. A user may close a displayed electronic book by selecting an icon displayed on the screen, for example, or by entering via a keyboard or other device a particular command.

In addition, a user may request and receive a definition, in speech form, of a word selected in the text. After selecting a word or words in the selection process 1168, a user selection process 1161 receives a user's selection of a define section 1207. In response, a decision process 1163 determines if text is selected; if not, display process 1174 displays the optional error message. If text is selected, a retrieve process 1165 retrieves a definition for the selected word or words from an electronic dictionary, and a conversion process 1167 converts the definitions from an electronic dictionary to speech form. Electronic dictionaries are known in the art and an example includes the system disclosed in U.S. Patent No. 4,831,654, entitled APPARATUS FOR MAKING AND EDITING DICTIONARY ENTRIES IN A TEXT TO SPEECH CONVERSION SYSTEM, which is incorporated herein by reference. During the

conversion, a user may select the pause section 1202, as detected by the selection process 1169, and in response a halt process 1171 stops the speech-form definition. When a user selects the resume section 1204, as detected by a selection process 1173, the conversion process 1167 continues to provide the speech-form definition of the selected word or words at a point where it was stopped.

Figure 25 is a flow chart of auto text-to-speech routine 1134 with an auto page turn feature. Auto text-to-speech routine 1134 may be implemented within the viewer 266, the library 262, or a combination; for example, it may be implemented by software modules residing within the instruction memory unit 632 for execution by the library processor 628 or within the instruction memory 732 for execution by the viewer processor 621 using software modules, or by hardware modules, or a combination of hardware and software modules. In the auto text-to-speech routine 1134, a display process 1220 displays a book menu, such as the book menu screen 1190. A selection process 1222 receives a user's selected book from the book menu, and in response a display process 1224 displays the selected electronic book such as in the text screen 1200 shown.

A conversion process 1226 continuously converts text to speech in the displayed book from page to page using, for example, a text-to-speech conversion program. In addition, the conversion process 1226 automatically turns the pages to display a current page for which text-to-speech conversion occurs. Text-to-speech conversion programs are known in the art and examples include those programs disclosed in the text-to-speech conversion program patents identified above and the products developed by the AT&T Advanced Speech Products Group. Alternatively, the header file for the electronic book may contain an audio file of the text of the electronic book, or a link to such a file, for presentation of the text in speech form. During the conversion, a user may select the pause section 1202, as detected by a selection process 1228, and in response a halt process 1230 stops the text-to-speech conversion. If a user selects the resume section 1204, as detected by a selection process 1232, the conversion process 1226 resumes the text-to-speech conversion at a point where it was stopped. Once the entire

electronic book has been converted, or the user closes the electronic book as determined by a close book process 1227, a return process 1234 returns to the main menu to display the main menu screen 1100 (shown in Figure 9).

Figure 26 is a flow chart of auto text-to-speech routine 1138 with a manual page turn feature. Auto text-to-speech routine 1138 may be implemented within the viewer 266, the library 262, or a combination; for example, it may be implemented by software modules residing within the instruction memory unit 632 for execution by the library processor 628 or within the instruction memory 732 for execution by the viewer processor 621, or by hardware modules, or a combination of hardware and software modules. In the auto text-to-speech routine 1138, a display process 1240 displays a book menu, such as book menu screen 1190. A selection process 1242 receives a user's selected book from the book menu, and in response a display process 1244 displays the selected electronic book such as in the text screen 1200.

A conversion process 1246 continuously converts text to speech in the displayed book from the displayed page using, for example, a text-to-speech conversion program. Text-to-speech conversion programs are known in the art and examples include those programs disclosed in the text-to-speech conversion program patents identified above and the products developed by the AT&T Advanced Speech Products Group. Alternatively, the header file for the electronic book may contain a separate audio file of the text of each page of the electronic book, or links to such files, for presentation of the text in speech form for the pages as selected by a user. In particular, when a user selects a particular page, the conversion process 1246 may retrieve the corresponding audio file to present the text on that page in speech form. A decision process 1254 determines if the text-to-speech conversion has reached the end of the displayed page and, if not, the conversion continues for the displayed page. During the conversion, the user may select pause section 1202, as detected by a selection process 1248, and in response a halt process 1250 stops the text-to-speech conversion. If a user selects the resume section 1204, as detected by a selection process 1252, the conversion process 1246 resumes the text-to-speech conversion at a point where it was stopped.

Once the textual content of the current page of the displayed electronic book has been converted, as determined by decision process 1254, a decision process 1256 determines if the end of the book is displayed. If the electronic book has more pages for display, a wait process 1258 waits for the user to select another page. A selection process 1260 receives the user's next selected page and in response returns to conversion process 1246 to perform text-to-speech conversion for the next displayed page using, for example, a text-to-speech program, as are known in the art, or using corresponding audio files. If the end of the book is displayed, as determined by decision process 1256, or if the user closes the book as determined by a close book process 1253, a return process 1262 returns to the main menu to display the main menu screen 1100.

Figure 27 is a flow chart of a settings routine 1142. The settings routine 1142 may be implemented within the viewer 266, the library 262, or a combination; for example, it may be implemented by software modules residing within the instruction memory unit 632 for execution by the library processor 628 or within the instruction memory 732 for execution by the viewer processor 621, or by hardware modules, or a combination of hardware and software modules. In the settings routine 1142, a display process 1270 displays a settings menu.

Figure 28 illustrates an example of a settings menu screen 1280 for display on the viewer 266. The settings menu screen 1280 includes a voice commands section 1282 to activate and deactivate voice commands by selecting certain activate and deactivate sections 1284 and 1286, respectively. A user may select the activate or deactivate options by, for example, positioning a cursor over the corresponding section next to the desired option and selecting the section, or by entering various other commands such as a particular selection of input keys. Voice or audible commands are the ability of the viewer 266 to execute a function corresponding to a command provided by a user in speech form. The settings menu screen 1280 also includes an available voice commands section 1311, identifying voice or audible commands available to a user and the following exemplary speech required to execute the

command: "page forward" command 1303; "page backward" command 1305; "open book" command 1307; and other functions 1309.

The settings menu screen 1280 also includes a rate section 1288 for setting a rate of text-to-speech conversion by manipulating a marker 1290 and moving the marker along the displayed rate scale. The term rate refers to the relative speed at which text is converted into corresponding speech. The machine speech conversion can be done electronically in advance, but the speech is provided at a certain pace determined by the user. Text-to-speech conversion programs, along with the ability to change a rate of the conversion, are known in the art and examples include the text-to-speech conversion program patents identified above and the products developed by the AT&T Advanced Speech Products Group.

A voice security section 1287 permits a user to activate and deactivate a voice security feature by selecting, respectively, sections 1289 and 1291. A voice security feature provides for activation of the viewer 266 and access to stored electronic books only in response to a voice command from a particular user or particular users.

The settings menu screen 1280 also includes a voice options section 1301 permitting a user to select various options for speech used to convert text. These options include, for example, a male voice 1313; a female voice 1315; a child's voice 1317; voice option 1 (1319); and voice option N (1321). A user may select one of these options by, for example, positioning a cursor over the corresponding section next to the desired option and selecting the section, or by entering various other commands such as a particular selection of input keys. Other options 1319 and 1321 may represent other types of voices such as user-defined voices, voices with particular characteristics, or the actual author's voice, for example. The other options 1319 and 1321 could also include the voice of a famous person, such as James Earl Jones or an imitation of James Earl Jones, for example. Text-to-speech conversion programs, along with varying types of voices for the conversion, are known in the art and examples include the text-to-speech conversion program patents identified above and the products developed by the AT&T Advanced Speech Products Group.

Once the text-to-speech process is executed in the viewer 266, the viewer may display a fixed (JPEG) or moving (MPEG 2) image. The displayed image may be retrieved by the viewer 266 from a specific database related to the electronic book being viewed. Alternatively, the viewer may access such an image using an electronic link. Use of electronic links in an electronic book are described in detail in copending patent Application Serial No. 09/237,828, entitled ELECTRONIC BOOKS ELECTRONIC LINKS, filed January 27, 1999, the disclosure of which is hereby incorporated by reference.

As shown in Figure 27, a receive process 1272 receives a user's selected settings in settings menu screen 1280. In response, a save process 1274 saves the selected settings for later use in providing text-to-speech functions or receiving voice commands. The settings may be saved in a table or other data structure in the instruction memory unit 632 or within the instruction memory 732 for use in controlling functions related to the electronic books. A decision process 1276 determines if the user closes settings menu screen 1280 and, if so, a return process 1278 returns to the main menu to display the main menu screen 1100.

Figure 29 is a flow chart of a dictation routine 1146. The dictation routine 1146 may be implemented within the viewer 266, the library 262, or a combination; for example, it may be implemented by software modules residing within the instruction memory unit 632 for execution by the library processor 628 or within the instruction memory 732 for execution by the viewer processor 621, or by hardware modules, or a combination of hardware and software modules. In the dictation routine 1146, a display process 1300 displays a book menu, such as book menu screen 1190. A selection process 1302 receives a user's selected book from the book menu, and in response a display process 1304 displays the selected electronic book. A display pages process 1306 displays pages of the electronic book as selected by the user.

Figure 30a illustrates a text dictation screen 1330 for display on the viewer 266 and for use with a dictation routine 1146. The text dictation screen includes a page section 1336 for permitting the user to enter a page number and have that page displayed. Page turn sections

1338 and 1340 permit a user to page backward and forward, respectively, in the displayed electronic book. A begin dictation section 1332 permits a user to begin speech-to-text conversion, and an end dictation section 1334 permits a user to end speech-to-text conversion. Text dictation screen 1330 indicates that, when an insertion point is chosen by the user, speech is converted to text directly within the page of the displayed electronic book at, for example, location 1341. The text insertion point may be indicated by the user positioning a cursor 1343 to a desired location on the page. Figure 30b illustrates that text dictation screen 1330 may also include a separate section 1342 for displaying text converted from speech, particularly when the user does not specify an insertion point.

A selection process 1308 detects when a user has selected the begin dictation section 1332. In response, a conversion process 1310 receives speech and converts it to corresponding text, and it may receive the speech from the user via speaker/microphone 608'. Speech-to-text and speech recognition programs are known in the art and examples include those programs disclosed in the following U.S. patents, which are incorporated herein by reference: U.S. Patent 5,864,805, entitled METHOD AND APPARATUS FOR ERROR CORRECTION IN A CONTINUOUS DICTATION SYSTEM; U.S. Patent 5,799,278, entitled SPEECH RECOGNITION SYSTEM AND METHOD USING A HIDDEN MARKOV MODEL; U.S. Patent 5,615,299, entitled SPEECH RECOGNITION USING DYNAMIC FEATURES; U.S. Patent 5,325,462, entitled SYSTEM AND METHOD FOR SPEECH SYNTHESIS EMPLOYING IMPROVED FORMANT COMPOSITION; U.S. Patent 5,313,531, entitled METHOD AND APPARATUS FOR SPEECH ANALYSIS AND SPEECH RECOGNITION; U.S. Patent 5,054,074, entitled OPTIMIZED SPEECH RECOGNITION SYSTEM AND METHOD; U.S. Patent 5,050,215, entitled SPEECH RECOGNITION METHOD; and U.S. Patent 4,430,726, entitled DICTATION/TRANSCRIPTION METHOD AND ARRANGEMENT. Other examples include products developed by the AT&T Advanced Speech Products Group.

A decision process 1312 determines if the user has selected an insertion point for the text, which may be indicated by positioning the cursor. If the user has selected an insertion point, an insert process 1316 inserts the text at the user-selected point. Otherwise, if the user has not selected an insertion point, an insertion process 1314 may insert the text in the separate displayed section 1342. A decision process 1318 determines if the user has selected the end dictation section 1334. Until the user selects the end dictation section 1334, conversion process 1310 continues converting speech into text. When the user selects the end dictation section 1334, a decision process 1320 determines if the user has closed the book and, if not, the dictation routine 1146 returns to display pages process 1306 in order to continue displaying pages and converting speech into text as requested by the user. If the user closes the book, a return process 1322 returns to the main menu to display the main menu screen 1100.

Figure 31 is a flow chart of a view book routine 1150. The view book routine 1150 may be implemented within the viewer 266, the library 262, or a combination; for example, it may be implemented by software modules residing within the instruction memory unit 632 for execution by the library processor 628 or within the instruction memory 732 for execution by the viewer processor 621, or by hardware modules, or a combination of hardware and software modules. In the view book routine 1150, a display process 1350 a displays book menu, such as book menu screen 1190. A selection process 1352 receives a user's selected book from the book menu, and in response a display process 1354 displays the selected electronic book.

Figure 32 illustrates an example of a view book screen 1370 for displaying on the viewer 266 a cover page 1372 of the selected electronic book. The view book screen 1370 also includes page backward section 1374 and page forward section 1376 for permitting a user to page backward and forward, respectively, within the displayed electronic book. A display pages process 1356 displays pages of the selected electronic book as requested by the user. A decision process 1358 determines if the user has closed the displayed electronic book and,

if the user closes the book, a return process 1360 returns to the main menu to display the main menu screen 1100.

The viewer 266 may also incorporate text to speech conversion and text recognition features to guide the user through the menu system 851, shown in Figure 13. For example, software resident on the viewer 266, or on another component of the home system 258 may be used to provide audio prompts related to menu navigation. When the user activates the menu system 851 and is presented with the main menu 854, the viewer 266 could provide an audio prompt such as: "Hello John. Do you want to order a new book or read an existing book? Please respond new book or existing book." If the user responds with "existing book," then the software operating on the viewer 266 may display the Books in Your Library submenu 872, and may provide further audio prompts.

Figure 33 is a flow chart of a voice commands routine 1380. The voice commands routine 1380 may be implemented within the viewer 266, the library 262, or a combination; for example, it may be implemented by software modules residing within the instruction memory unit 632 for execution by the library processor 628 or within the instruction memory 732 for execution by the viewer processor 621, or by hardware modules, or a combination of hardware and software modules. This routine permits a user to enter commands via speech, rather than manipulating the viewer controls to enter commands. In the voice commands routine 1380, a decision process 1382 determines if the user has activated the voice commands option. If the option is activated, a receive process 1384 receives a voice command, and it may receive the voice command from a user via the microphone 634.

A conversion process 1386 converts the voice command to a corresponding electronic signal, and a determination process 1388 determines the requested function by analyzing the electronic signal. Examples of functions corresponding to the command include a turn page forward function 1390 for the viewer 266 to display the next page in the displayed electronic book; a turn page backward function 1392 for the viewer 266 to display the previous page in the displayed electronic book; an open book function 1394 for the viewer 266 to display a

particular electronic book; or other functions 1396. After determining the requested function, an execute process 1398 executes the requested function. The viewer 266 may display typical voice command options available to assist the user in understanding the voice commands acted upon by the viewer 266 at a given point in time. The determination process 1388 may use speech recognition programs for the determination; such programs are known in the art and include those exemplary systems in the speech-to-text and speech recognition patents identified above and the products available from the AT&T Advanced Speech Products Group.

Figure 34 is a flow chart of a voice security routine 1125. Voice security routine 1125 may be implemented within the viewer 266, the library 262, or a combination; for example, it may be implemented by software modules residing within the instruction memory unit 632 for execution by the library processor 628 or within the instruction memory 732 for execution by the viewer processor 621, or by hardware modules, or a combination of hardware and software modules. In a voice security routine 1125, a request process 1404 requests an audible signal for security purposes, and it may be requested via a screen on the viewer 266 or in audio form. A receive process 1405 receives the requested audible signal using the microphone 634, and a conversion process 1406 converts the audible signal to a corresponding electronic signal. A compare process 1408 compares the electronic signal with a stored signal, and a decision process 1410 determines if the electronic signal satisfies particular criteria in order to determine if the user has authorization for a requested function.

The decision process 1410 may use speech recognition programs for the determination; such programs are known in the art and include those exemplary systems in the speech-to-text and speech recognition patents identified above and the products available from the AT&T Advanced Speech Products Group. If the criteria are not satisfied, a deny process 1412 denies authorization to execute commands from the user and, if the criteria are satisfied, a grant process 1414 grants authorization to execute commands from the user. Main menu process 1120 uses the granted or denied status to determine whether to executed a user's requested function.

The viewer 266 may also include software that restricts access to specific electronic books based on recognizing a voice of a user. For example, the viewer 266 may determine that a particular user is a child, and then limit access to specific electronic books authorized by a parent for that child to view. Alternatively, the viewer could prevent access to specific electronic books designated by the parent. The same access limitation software may be used to limit access by two or more users to content in the viewer 266 or the home system 258. For example, two adult users of a same viewer 266 may limit access by agreeing that only a first adult user views books one through ten, a second adult user only views books eleven through 20, and that both adult users view books 21 through 30.

While this invention has been described in conjunction with the embodiments described above, it is evident that many alterations, modifications and variations will be apparent to those skilled in the art. Accordingly, embodiments of the invention as set forth above are intended to be only illustrative. Various changes may be made without departing from the scope of the invention as defined in the following claims and their equivalents.

In the Claims:

1. A method for providing text-to-speech conversion for an electronic book displayed on a viewer, comprising:

displaying a page of an electronic book on the viewer, the page including text;

receiving a selection of text on the displayed page for conversion to speech; and

converting at least a portion of the selected text into the corresponding speech.

2. The method of claim 1, further including pausing the conversion of the text.

3. The method of claim 2, further including resuming the conversion of the text.

4. The method of claim 1, further including providing a definition, in speech form, of a word selected by a user within the text.

5. The method of claim 1, further including permitting a user to adjust a rate of the conversion to the speech.

6. The method of claim 1, further including permitting a user to select a particular type of voice for the corresponding speech.

7. A method for providing text-to-speech conversion for an electronic book displayed on a viewer, comprising:

displaying a page of an electronic book on the viewer, the page including text;

receiving a selection of text on the displayed page for conversion to speech; and

converting at least a portion of the selected text into corresponding speech, wherein the connecting steps comprises accessing an audio file corresponding to the selected text.

8. A method for providing text-to-speech conversion for an electronic book displayed on a viewer, comprising:

displaying a page of an electronic book on a viewer, the page including text;

receiving information relating to a text-to-speech function of the electronic book;

converting at least of a portion the text on the displayed page into corresponding speech based upon the information; and

automatically displaying a next page of the electronic book and converting at least a portion of text on the next page into corresponding speech.

9. The method of claim 8, further including pausing the conversion of the text.

10. The method of claim 9, further including resuming the conversion of the text.

11. A method for providing text-to-speech conversion for an electronic book displayed on a viewer, comprising:

displaying a page of an electronic book on a viewer, the page including text;

receiving information relating to a text-to-speech function of the electronic book;

converting at least of a portion the text on the displayed page into corresponding speech based upon the information; and

automatically converting at least a portion of text into corresponding speech on another page of the electronic book upon receiving a selection of another page.

12. The method of claim 11, further including pausing the conversion of the text.

13. The method of claim 12, further including resuming the conversion of the text.

14. A method for receiving commands for executing functions related to an electronic book displayed on a viewer, comprising:

displaying a page of an electronic book on a viewer;

receiving an audible command relating to a function of the electronic book;

converting the audible command into a corresponding electronic signal; and

executing the function in response to the electronic signal.

15. The method of claim 14, wherein the receiving step includes receiving a turn page command.

16. The method of claim 14, wherein the receiving step includes receiving an open book command.

17. The method of claim 14, further including displaying an indication of available audible commands.

18. A method for performing dictation into an electronic book displayed on a viewer, comprising:

displaying a page of an electronic book on a viewer;

providing a text insertion cursor for designating a text insertion point;

receiving speech from a user;

converting the speech into corresponding electronic text;

displaying the text on the viewer; and

inserting the text into the electronic book.

19. The method of claim 18, wherein the inserting step includes inserting the text into the electronic book at a location identified by the user using the cursor.

20. A method for restricting access to an electronic book for display on a viewer, comprising:

storing an electronic book for display on a viewer;

receiving an audible command from a user relating to a function of the electronic book;

converting the audible command into a corresponding electronic signal; and

providing authorization to execute commands from the user relating to the electronic book only if the electronic signal satisfies particular criteria.

21. The method of claim 20, wherein the displaying step includes comparing the electronic signal to a stored electronic signal relating to the user.

22. An apparatus for providing text-to-speech conversion for an electronic book displayed on a viewer, comprising:

a display that displays a page of an electronic book on a viewer, the page including text;

a selection module that receives a selection of text on the displayed page for the conversion to speech; and

a conversion module that converts at least of a portion of the selected text into corresponding speech.

23. The apparatus of claim 22, further including a pause module that pauses the conversion of the text.

24. The apparatus of claim 23, further including a resume module that resumes the conversion of the text.

25. The apparatus of claim 22, further including a dictionary module that provides a definition, in speech form, of a word selected by a user within the text.

26. The apparatus of claim 22, further including a rate module that permits a user to adjust a rate of the conversion to the speech.

27. The apparatus of claim 22, further including a voice options module that permits a user to select a particular type of voice for the corresponding speech.

28. An apparatus for providing text-to-speech conversion for an electronic book displayed on a viewer, comprising:

a display that displays a page of an electronic book on a viewer, the page including text;

a selection module that receives a selection of text on the displayed page for the conversion to speech; and

a conversion module that converts at least of a portion of the selected text into corresponding speech, wherein the conversion module includes an audio access module that accesses an audio file corresponding to the selected text.

29. An apparatus for providing text-to-speech conversion for an electronic book displayed on a viewer, comprising:

a first conversion display that displays a page of an electronic book on a viewer, the page including text;

a display module that receives information relating to a text-to-speech function of the electronic book;

a second conversion module that converts at least of a portion the text on the displayed page into corresponding speech based upon the information;

a module that automatically displays a next page of the electronic book; and

a module that automatically converts at least a portion of text on the next page into corresponding speech.

30. The apparatus of claim 29, further including a pause module that pauses the conversion of the text.

31. The apparatus of claim 30, further including a resume module that resumes the conversion of the text.

32. An apparatus for providing text-to-speech conversion for an electronic book displayed on a viewer, comprising:

a display that displays a page of an electronic book on a viewer, the page including text;

a receive module that receives information relating to a text-to-speech function of the electronic book;

a conversion module that converts at least of a portion the text on the displayed page into corresponding speech based upon the information; and

a display module that automatically converts at least a portion of text into corresponding speech on another page of the electronic book upon receiving a selection of another page.

33. The apparatus of claim 32, further including a pause module that pauses the conversion of the text.

34. The apparatus of claim 33, further including a resume module that resumes the conversion of the text.

35. An apparatus for receiving commands for executing functions related to an electronic book displayed on a viewer, comprising:

a display that displays a page of an electronic book on a viewer;

a receive module that receives an audible command relating to a function of the electronic book;

a conversion module that converts the audible command into a corresponding electronic signal; and

an execute module that executes the function in response to the electronic signal.

36. The apparatus of claim 35, wherein the receive module includes a page turn module that receives a turn page command.

37. The apparatus of claim 35, wherein the receive module includes an open book module that receives an open book command.

38. The apparatus of claim 35, further including a display commands module that displays an indication of available audible commands.

39. An apparatus for performing dictation into an electronic book displayed on a viewer, comprising:

a display that displays a page of an electronic book on a viewer;

a receive module that receives speech from a user;

a commands module that converts the speech into corresponding electronic text; and

an insertion module that inserts the text into the electronic book.

40. The apparatus of claim 39, wherein the insertion module includes an insertion point module that inserts the text into the electronic book at a location identified by the user.

41. An apparatus for restricting access to an electronic book for display on a viewer, comprising:

a store module that stores an electronic book for display on a viewer;

a receive module that receives an audible command from a user relating to a function of the electronic book;

a conversion module that converts the audible command into a corresponding electronic signal; and

an authorization module that provides authorization to execute commands from the user relating to the electronic book only if the electronic signal satisfies particular criteria.

42. The apparatus of claim 41, further comprising a display module, wherein the display module includes a compare module that compares the electronic signal to a stored electronic signal relating to the user.

43. A method for electronically displaying a page of an electronic book on a viewer and permitting a user to request a text-to-speech function, comprising:

displaying a screen on a viewer;

displaying within the screen a page of an electronic book, the page including text;

permitting a user to identify at least a portion of the text displayed within the screen; and

displaying a section within the screen for permitting the user to request a text-to-speech conversion of the identified text.

44. The method of claim 43, further including displaying a section for permitting a user to request a definition, in speech form, of a word identified in the text.

45. The method of claim 43, further including displaying a section for permitting a user to request that the text-to-speech conversion be paused.

46. The method of claim 45, further including displaying a section for permitting a user to request that the text-to-speech conversion be resumed.

47. The method of claim 43, further comprising displaying an image on the screen after the text-to-speech conversion begins.

48. The method of claim 47, wherein the image is one of a JPEG file and a MPEG 2 file.

49. The method of claim 43, further comprising adjusting a rate of text-to-speech audible response based on a command received by the user.

50. The method of claim 43, further comprising:

converting an electronic book menu system text to speech;

providing menu navigation prompts as audible signals; and

receiving audible commands from the user based on the received prompts.

51. A screen for use in electronically displaying a page of an electronic book on a viewer and permitting a user to request a text-to-speech function, comprising:

a screen for display on a viewer;

a section within the screen for displaying a page of an electronic book, the page including text and the section permitting a user to identify at least a portion of the text displayed within the screen; and

a convert section within the screen for permitting the user to request a text-to-speech conversion of the identified text.

52. The screen of claim 51, further including a define section for permitting a user to request a definition, in speech form, of a word identified in the text.

53. The screen of claim 51, further including a pause section for permitting a user to request that the text-to-speech conversion be paused.

54. The screen of claim 53, further including a resume section for permitting a user to request that the text-to-speech conversion be resumed.

55. A method for electronically displaying a page of an electronic book on a viewer and permitting a user to request a speech-to-text function, comprising:

displaying a screen on a viewer;

displaying within the screen a page of an electronic book; and

displaying a section within the screen for permitting a user to request a speech-to-text conversion for insertion of text into the displayed page of the electronic book.

56. The method of claim 55, further including displaying a section within the screen for the user to request an end to the speech-to-text conversion.

57. A screen for use in electronically displaying a page of an electronic book on a viewer and permitting a user to request a speech-to-text function, comprising:

a screen for display on a viewer;

a section within the screen for displaying a page of an electronic book; and

a begin dictation section within the screen for permitting a user to request a speech-to-text conversion for insertion of text into the displayed page of the electronic book.

58. The screen of claim 57, further including an end dictation section within the screen for the user to request an end to the speech-to-text conversion.

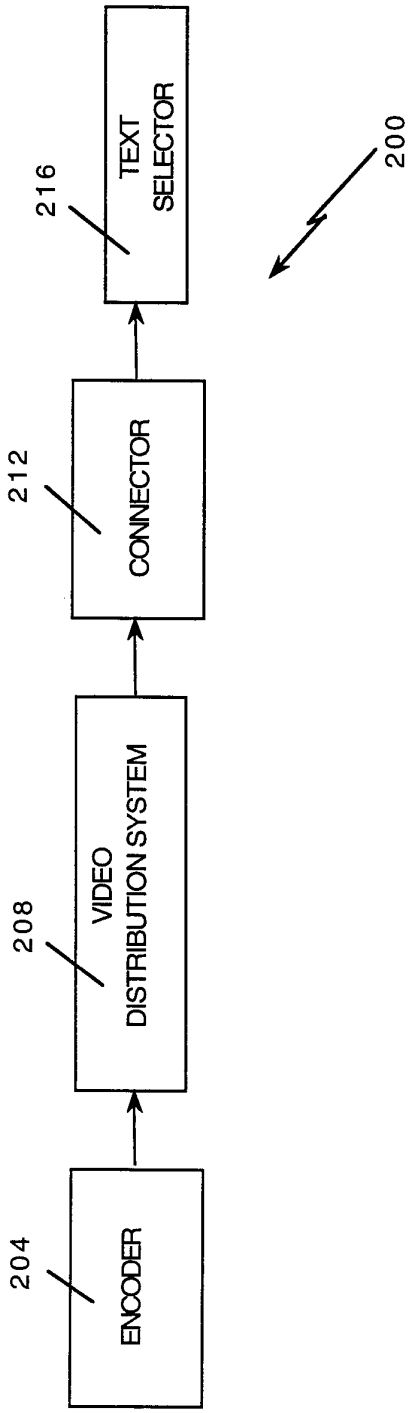
ENCODER
204
VIDEO
DISTRIBUTION SYSTEM
208
CONNECTOR
212
TEXT
SELECTOR
216
200

Fig. 1

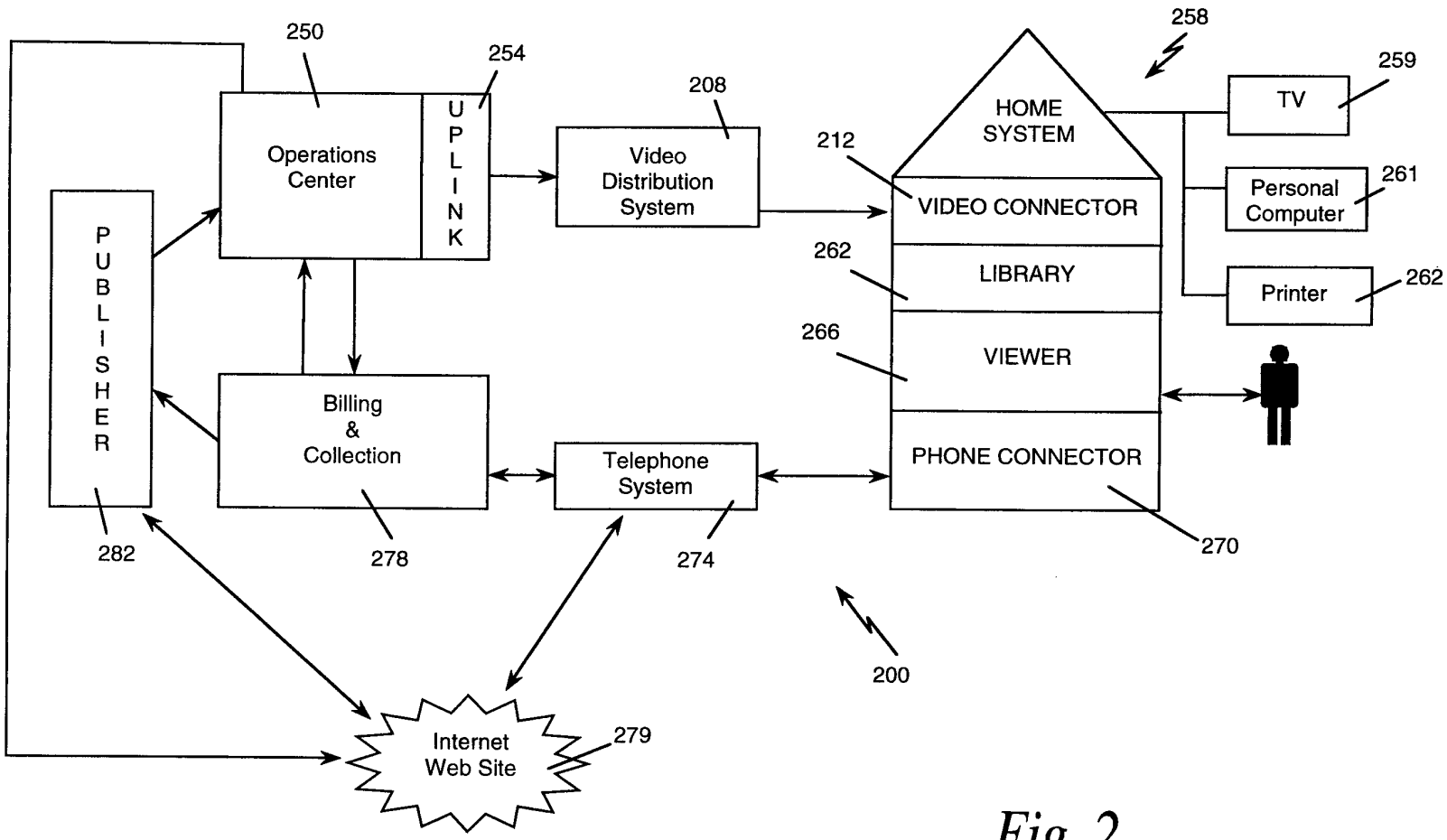
250
254
Operations Center
UPLINK
PUBLISHER
Billing & Collection
282
278
208
Video Distribution System
Telephone System
274
212
HOME SYSTEM
VIDEO CONNECTOR
262
LIBRARY
266
VIEWER
PHONE CONNECTOR
270
258
TV
259
Personal Computer
261
Printer
262
200
Internet Web Site
279

Fig. 2

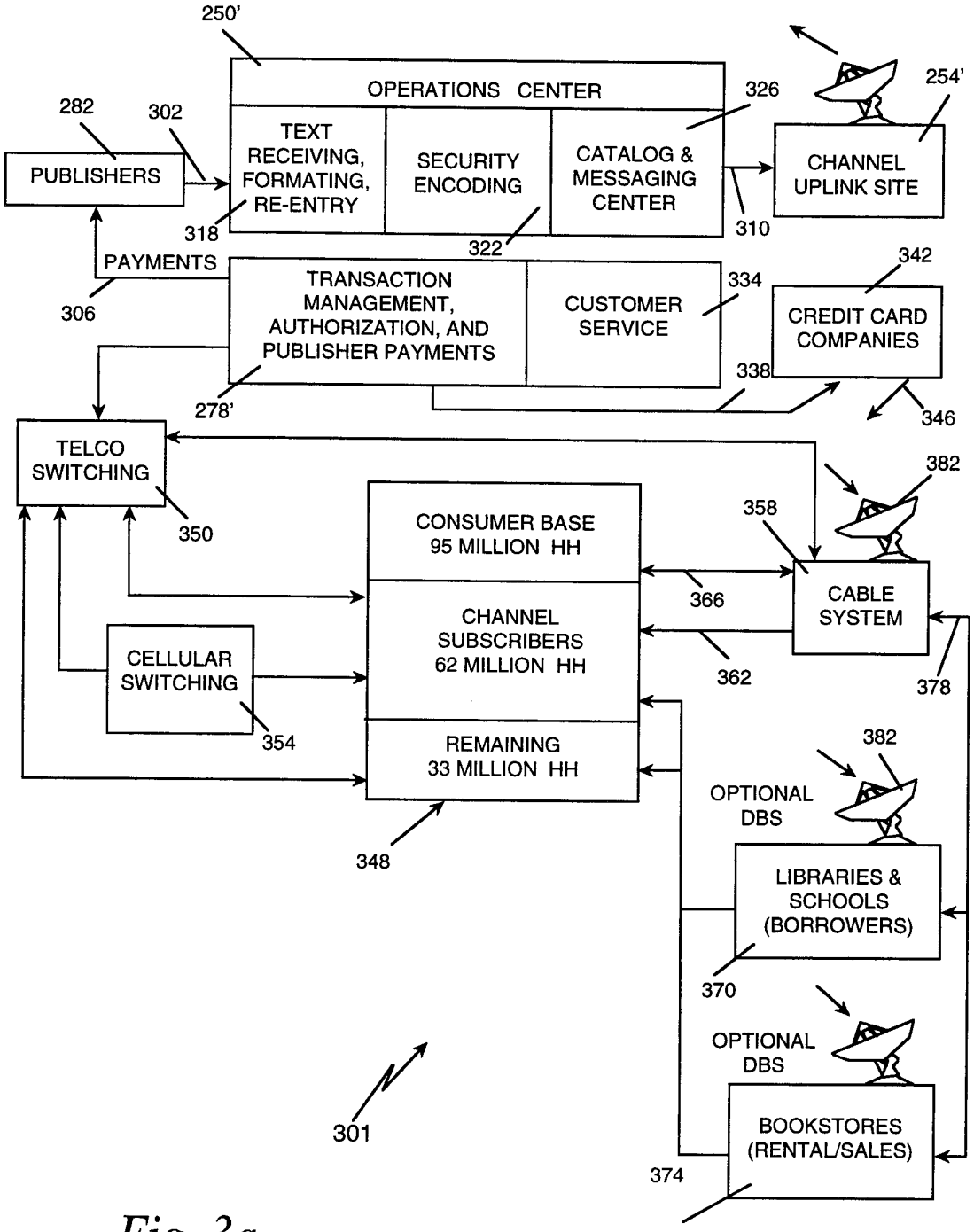
250'
OPERATIONS CENTER
TEXT RECEIVING, FORMATING, RE-ENTRY
SECURITY ENCODING
CATALOG & MESSAGING CENTER
326
254'
CHANNEL UPLINK SITE
282
302
PUBLISHERS
318
322
310
PAYMENTS
306
TRANSACTION MANAGEMENT, AUTHORIZATION, AND PUBLISHER PAYMENTS
CUSTOMER SERVICE
334
342
CREDIT CARD COMPANIES
338
278'
346
TELCO SWITCHING
350
382
358
CONSUMER BASE 95 MILLION HH
CHANNEL SUBSCRIBERS 62 MILLION HH
REMAINING 33 MILLION HH
366
CABLE SYSTEM
362
378
CELLULAR SWITCHING
354
382
OPTIONAL DBS
LIBRARIES & SCHOOLS (BORROWERS)
348
370
OPTIONAL DBS
BOOKSTORES (RENTAL/SALES)
301
374

Fig. 3a

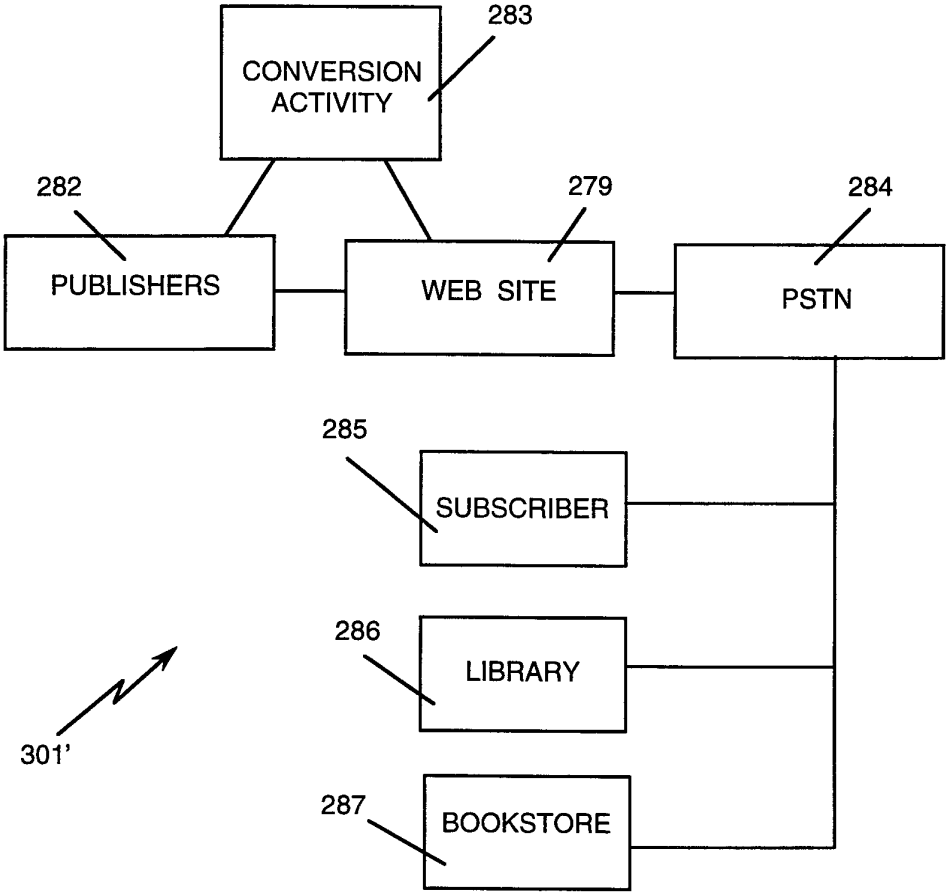
CONVERSION ACTIVITY
283
282
279
284
PUBLISHERS
WEB SITE
PSTN
285
SUBSCRIBER
286
LIBRARY
301'
287
BOOKSTORE

Fig. 3b

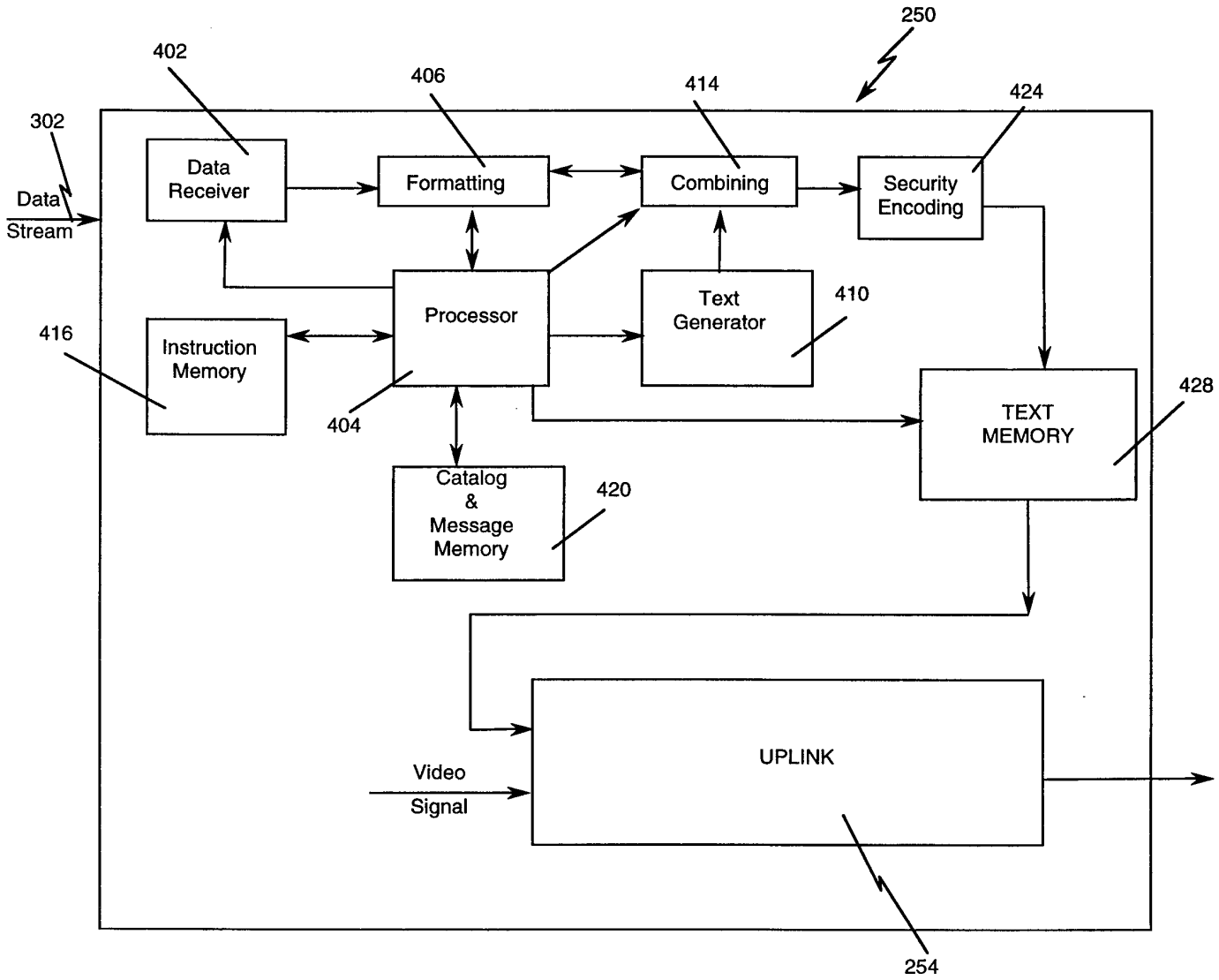
250
402
406
414
424
302
Data
Stream
Data
Receiver
Formatting
Combining
Security
Encoding
Processor
Text
Generator
410
416
Instruction
Memory
404
TEXT
MEMORY
428
Catalog
&
Message
Memory
420
UPLINK
Video
Signal
254

Fig. 4

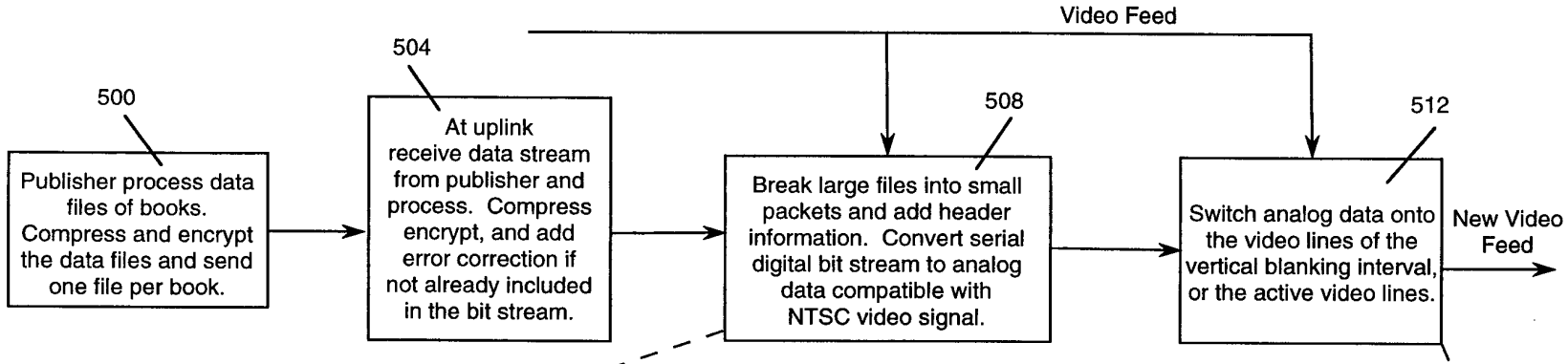
Video Feed
500
Publisher process data files of books. Compress and encrypt the data files and send one file per book.
504
At uplink receive data stream from publisher and process. Compress encrypt, and add error correction if not already included in the bit stream.
508
Break large files into small packets and add header information. Convert serial digital bit stream to analog data compatible with NTSC video signal.
512
Switch analog data onto the video lines of the vertical blanking interval, or the active video lines.
New Video Feed

Fig. 5a

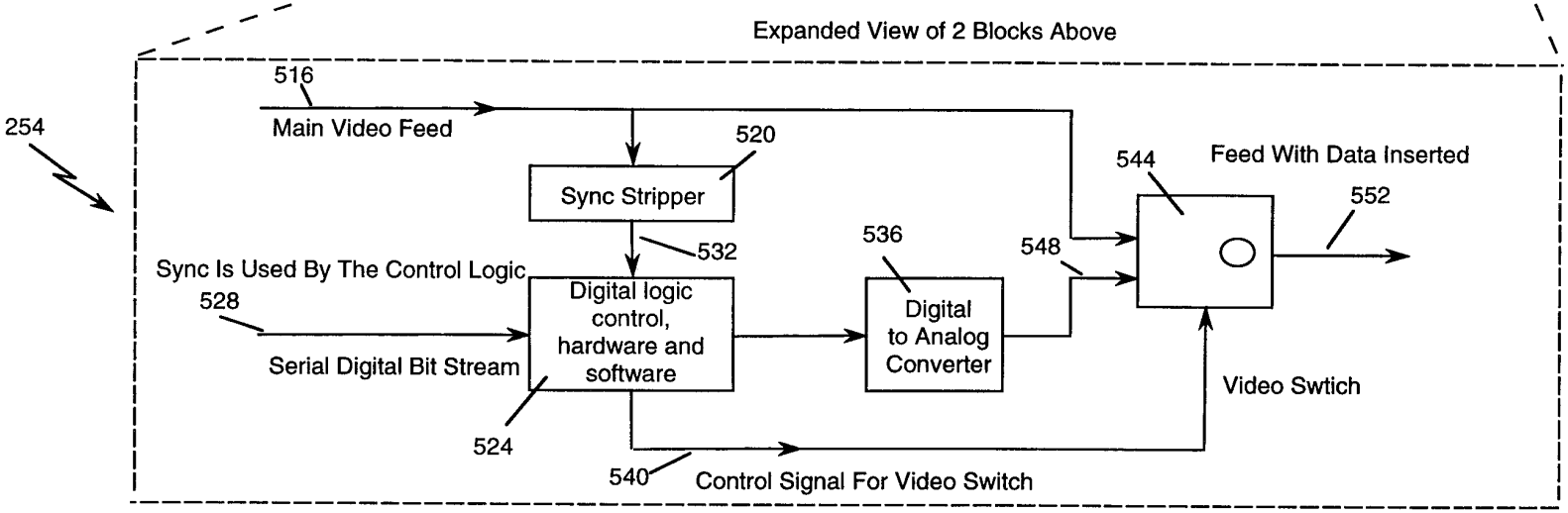
Expanded View of 2 Blocks Above
254
516
Main Video Feed
520
Sync Stripper
532
Sync Is Used By The Control Logic
528
Serial Digital Bit Stream
Digital logic control, hardware and software
524
536
Digital to Analog Converter
548
544
Feed With Data Inserted
552
Video Swtich
540
Control Signal For Video Switch

Fig. 5b

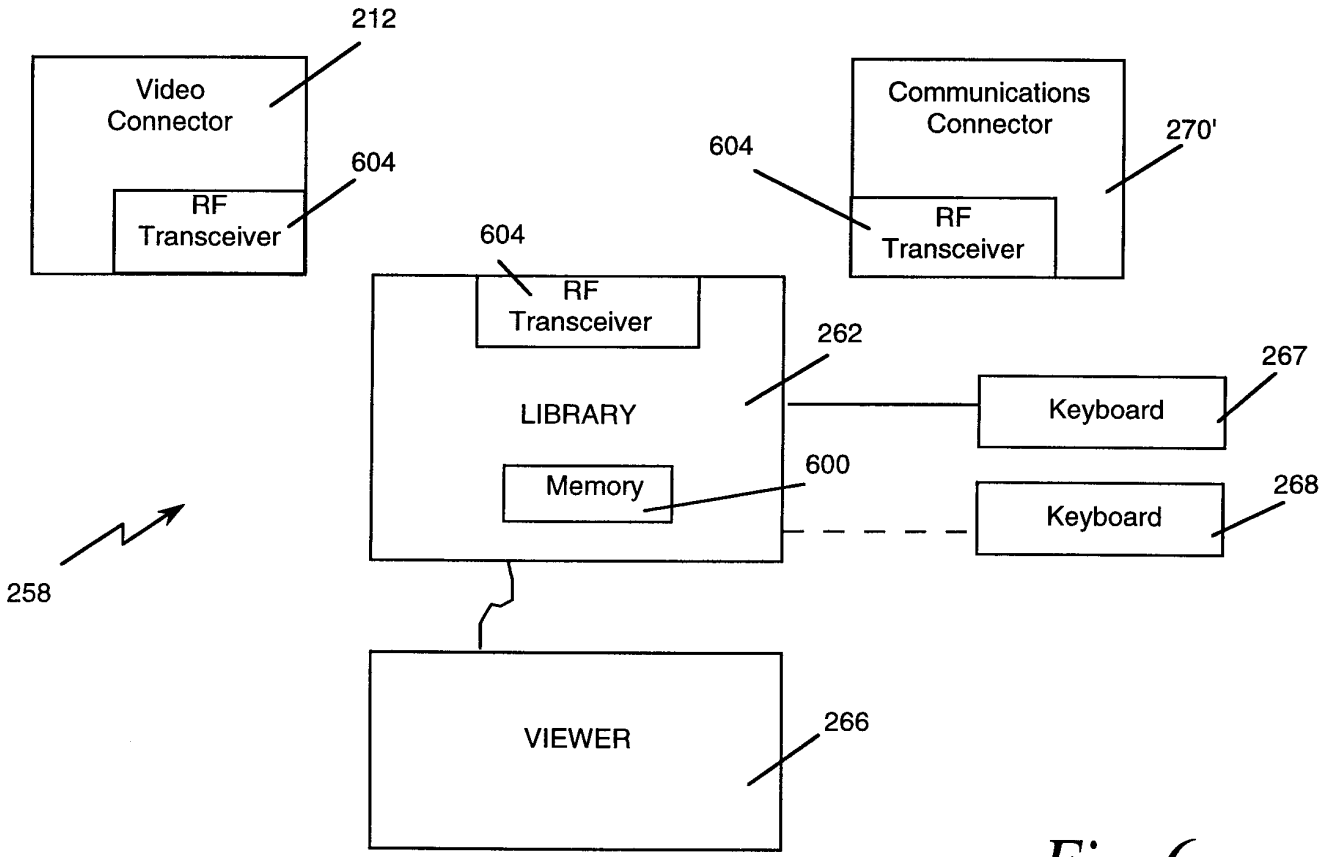
212
Video Connector
604
RF Transceiver
604
RF Transceiver
LIBRARY
Memory
262
600
Communications Connector
270'
604
RF Transceiver
267
Keyboard
268
Keyboard
258
VIEWER
266

Fig. 6a

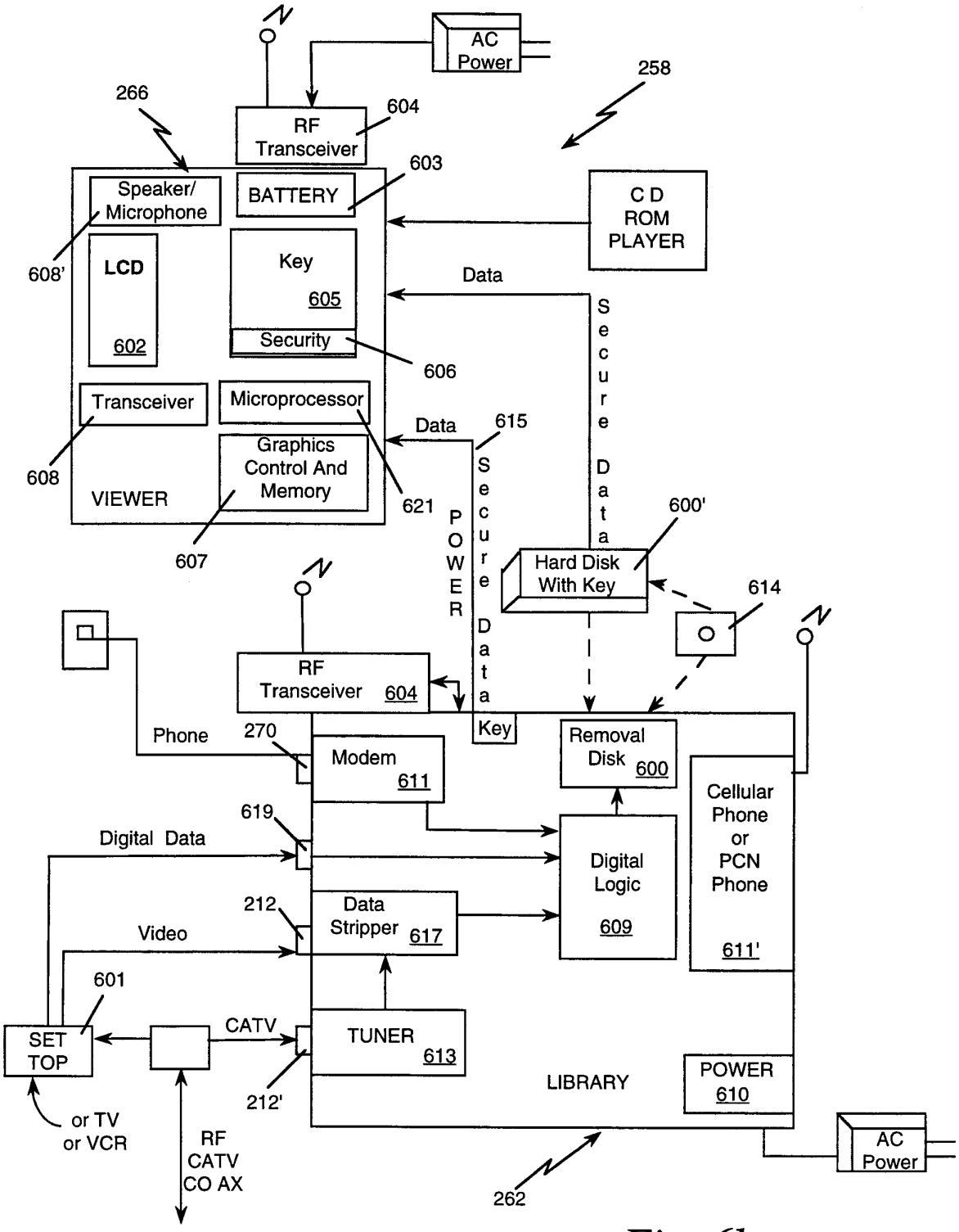
AC Power
258
266
RF Transceiver
604
603
Speaker/ Microphone
BATTERY
C D ROM PLAYER
608'
LCD
602
Key
605
Security
606
Data
Secure Data
Transceiver
Microprocessor
Data
615
608
Graphics Control And Memory
VIEWER
621
607
POWER
Secure Data Key
600'
Hard Disk With Key
614
RF Transceiver 604
Phone
270
Modem 611
Removal Disk 600
Cellular Phone or PCN Phone
611'
619
Digital Data
Digital Logic 609
212
Data Stripper 617
Video
601
SET TOP
CATV
TUNER 613
212'
LIBRARY
POWER 610
or TV or VCR
RF CATV CO AX
262
AC Power

Fig. 6b

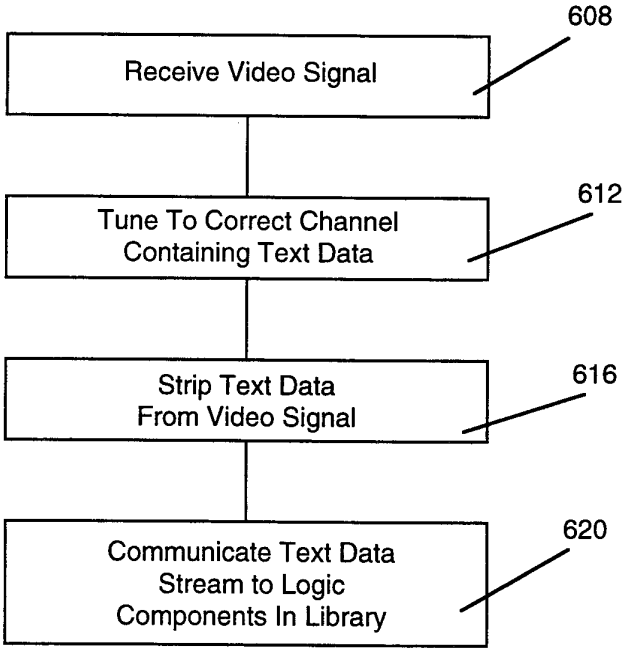
608
Receive Video Signal
612
Tune To Correct Channel
Containing Text Data
616
Strip Text Data
From Video Signal
620
Communicate Text Data
Stream to Logic
Components In Library

Fig. 7

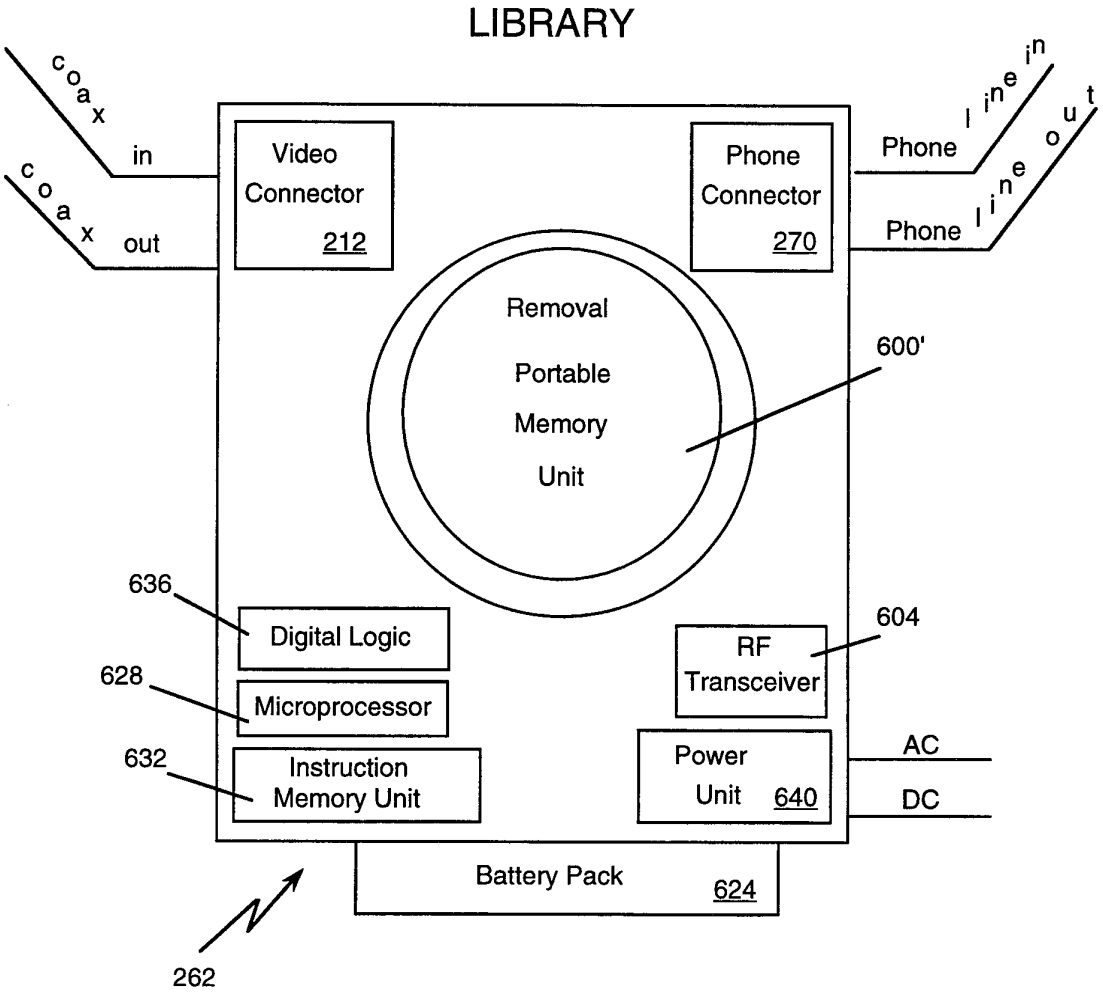
LIBRARY
coax in
coax out
Video Connector 212
Phone Connector 270
Phone line in
Phone line out
Removal Portable Memory Unit
600'
636
Digital Logic
628
Microprocessor
632
Instruction Memory Unit
604
RF Transceiver
Power Unit 640
AC
DC
Battery Pack 624
262

Fig. 8

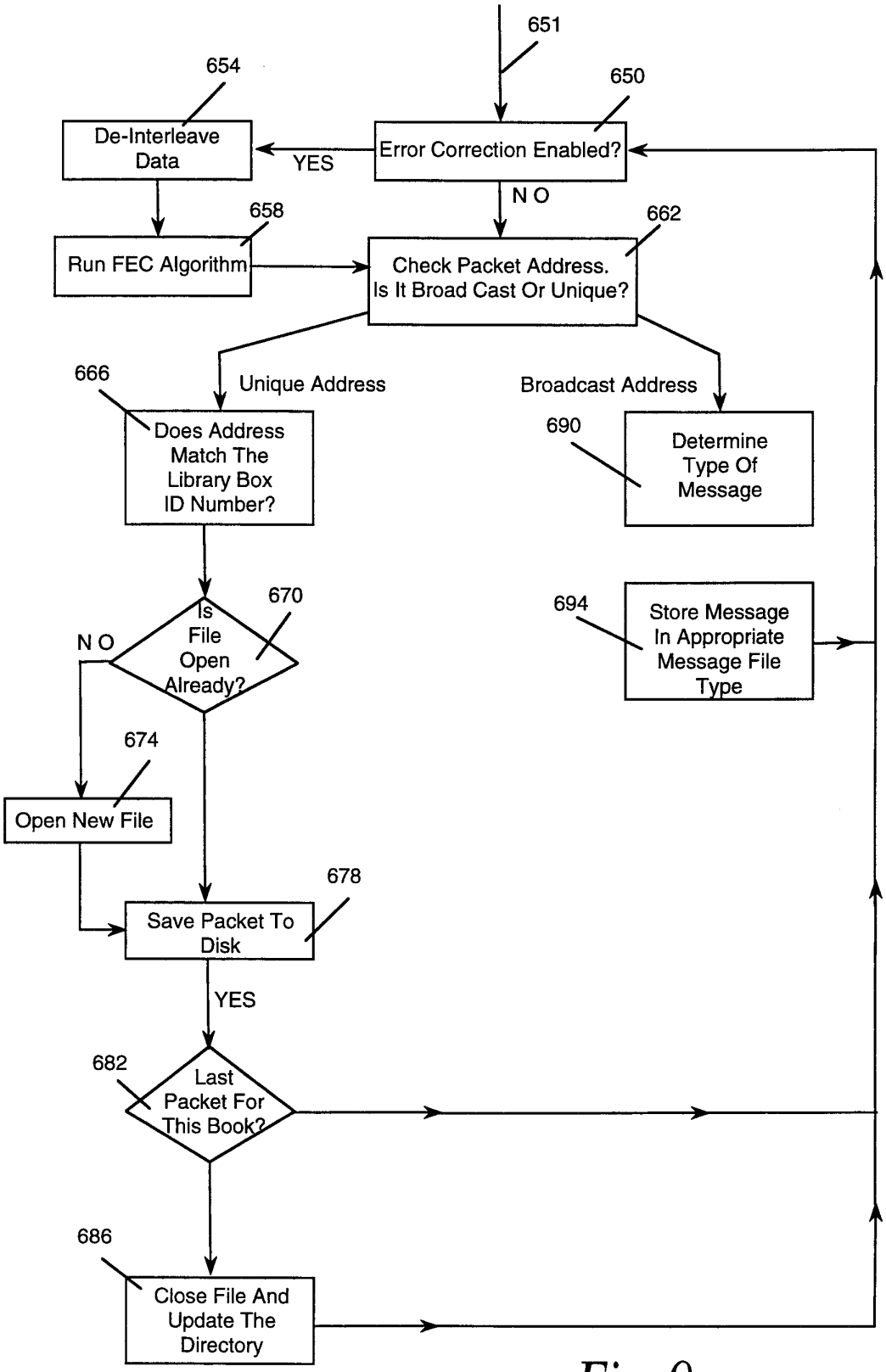
651
654
650
De-Interleave Data
YES
Error Correction Enabled?
N O
658
662
Run FEC Algorithm
Check Packet Address. Is It Broad Cast Or Unique?
666
Unique Address
Broadcast Address
690
Does Address Match The Library Box ID Number?
Determine Type Of Message
670
694
Is File Open Already?
Store Message In Appropriate Message File Type
N O
674
Open New File
678
Save Packet To Disk
YES
682
Last Packet For This Book?
686
Close File And Update The Directory

Fig. 9

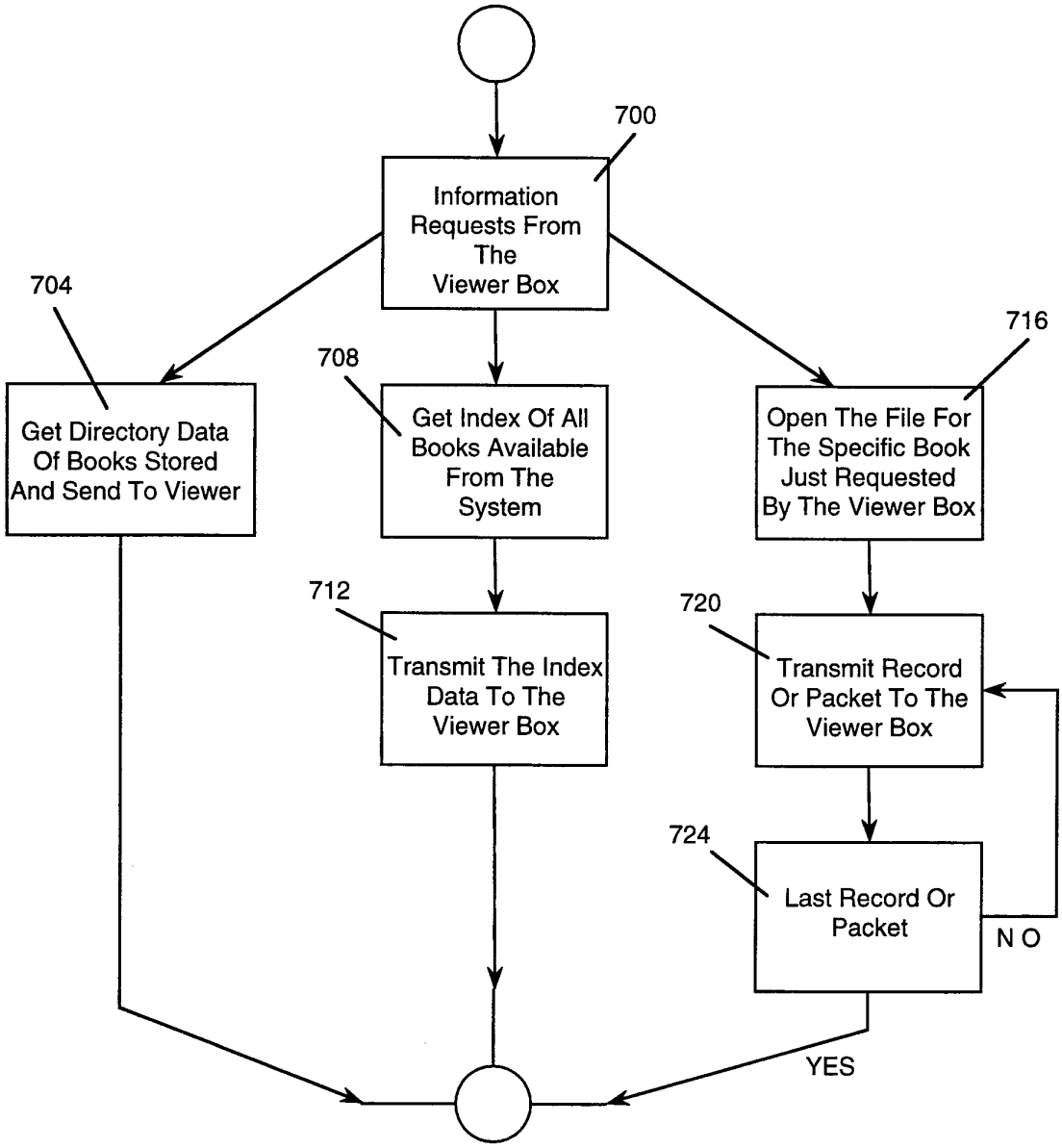
700
Information Requests From The Viewer Box
704
Get Directory Data Of Books Stored And Send To Viewer
708
Get Index Of All Books Available From The System
716
Open The File For The Specific Book Just Requested By The Viewer Box
712
Transmit The Index Data To The Viewer Box
720
Transmit Record Or Packet To The Viewer Box
724
Last Record Or Packet
N O
YES

Fig. 10

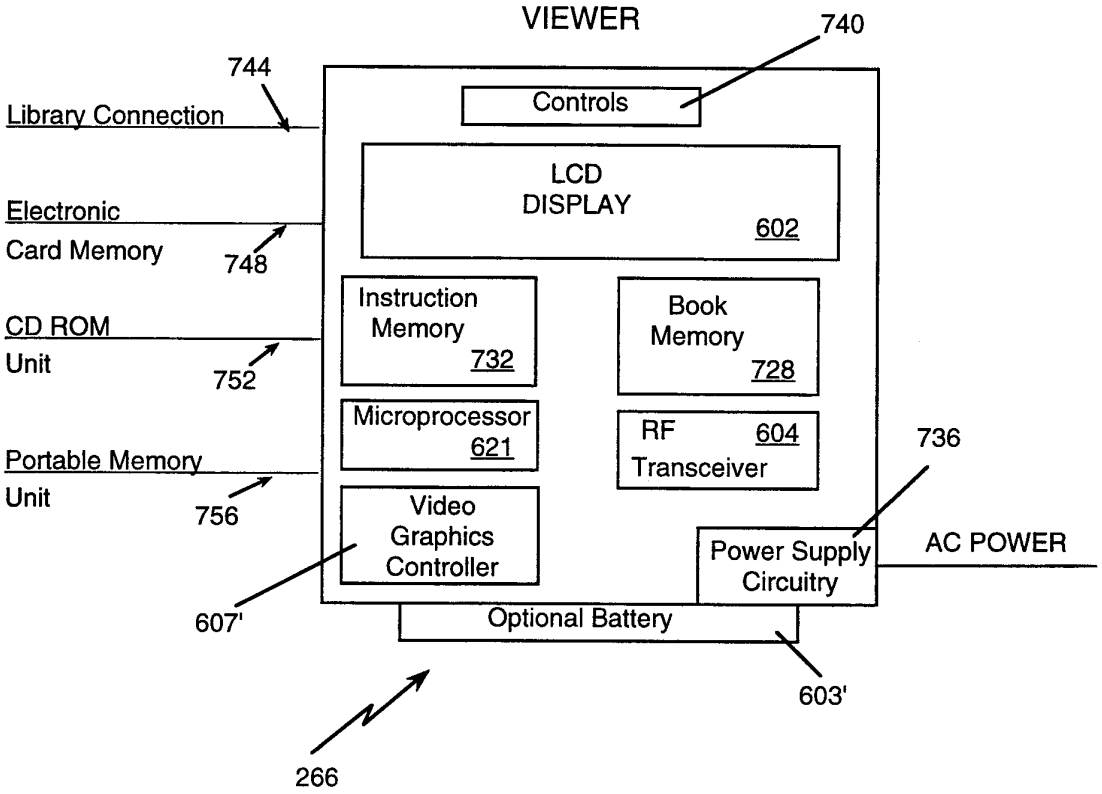
VIEWER
740
744
Library Connection
Controls
LCD
DISPLAY
602
Electronic
Card Memory
748
Instruction
Memory
732
Book
Memory
728
CD ROM
Unit
752
Microprocessor
621
RF
604
Transceiver
736
Portable Memory
Unit
756
Video
Graphics
Controller
Power Supply
Circuitry
AC POWER
607'
Optional Battery
603'
266

Fig. 11

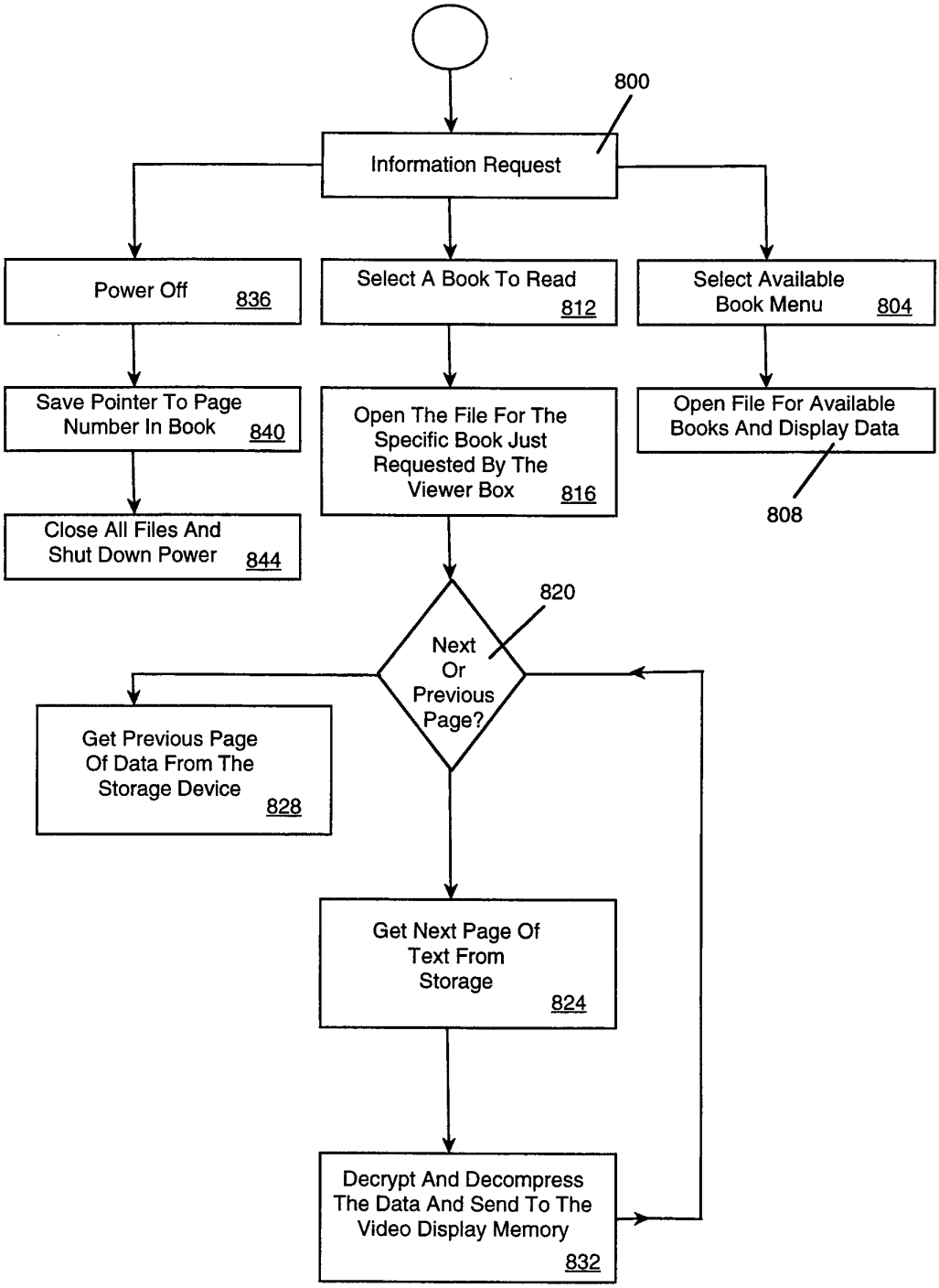
800
Information Request
Power Off 836
Select A Book To Read 812
Select Available Book Menu 804
Save Pointer To Page Number In Book 840
Open The File For The Specific Book Just Requested By The Viewer Box 816
Open File For Available Books And Display Data
808
Close All Files And Shut Down Power 844
820
Next Or Previous Page?
Get Previous Page Of Data From The Storage Device 828
Get Next Page Of Text From Storage 824
Decrypt And Decompress The Data And Send To The Video Display Memory 832

Fig. 12

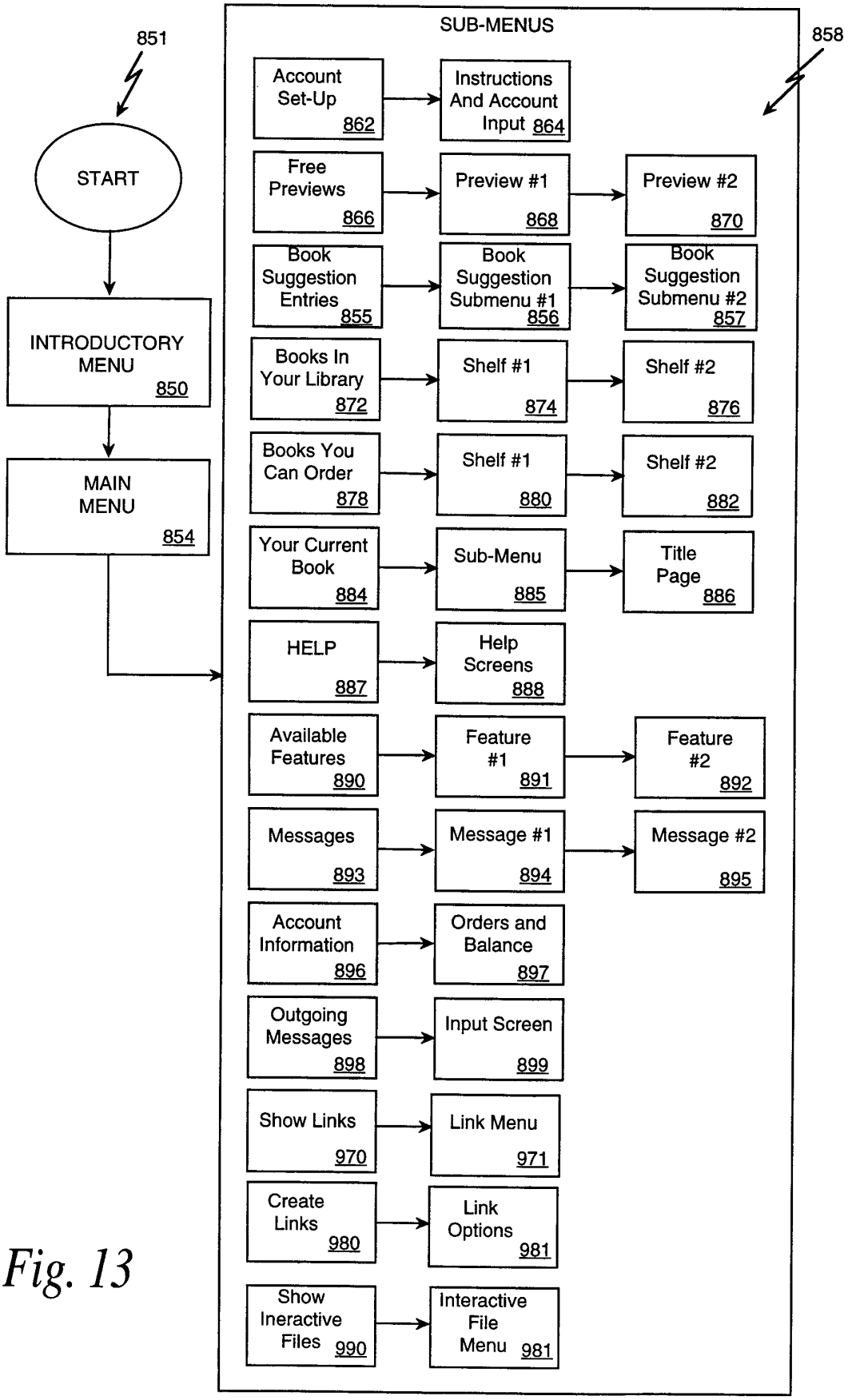
851
START
INTRODUCTORY MENU 850
MAIN MENU 854
SUB-MENUS
858
Account Set-Up 862
Instructions And Account Input 864
Free Previews 866
Preview #1 868
Preview #2 870
Book Suggestion Entries 855
Book Suggestion Submenu #1 856
Book Suggestion Submenu #2 857
Books In Your Library 872
Shelf #1 874
Shelf #2 876
Books You Can Order 878
Shelf #1 880
Shelf #2 882
Your Current Book 884
Sub-Menu 885
Title Page 886
HELP 887
Help Screens 888
Available Features 890
Feature #1 891
Feature #2 892
Messages 893
Message #1 894
Message #2 895
Account Information 896
Orders and Balance 897
Outgoing Messages 898
Input Screen 899
Show Links 970
Link Menu 971
Create Links 980
Link Options 981
Show Ineractive Files 990
Interactive File Menu 981

Fig. 13

Fig. 14a

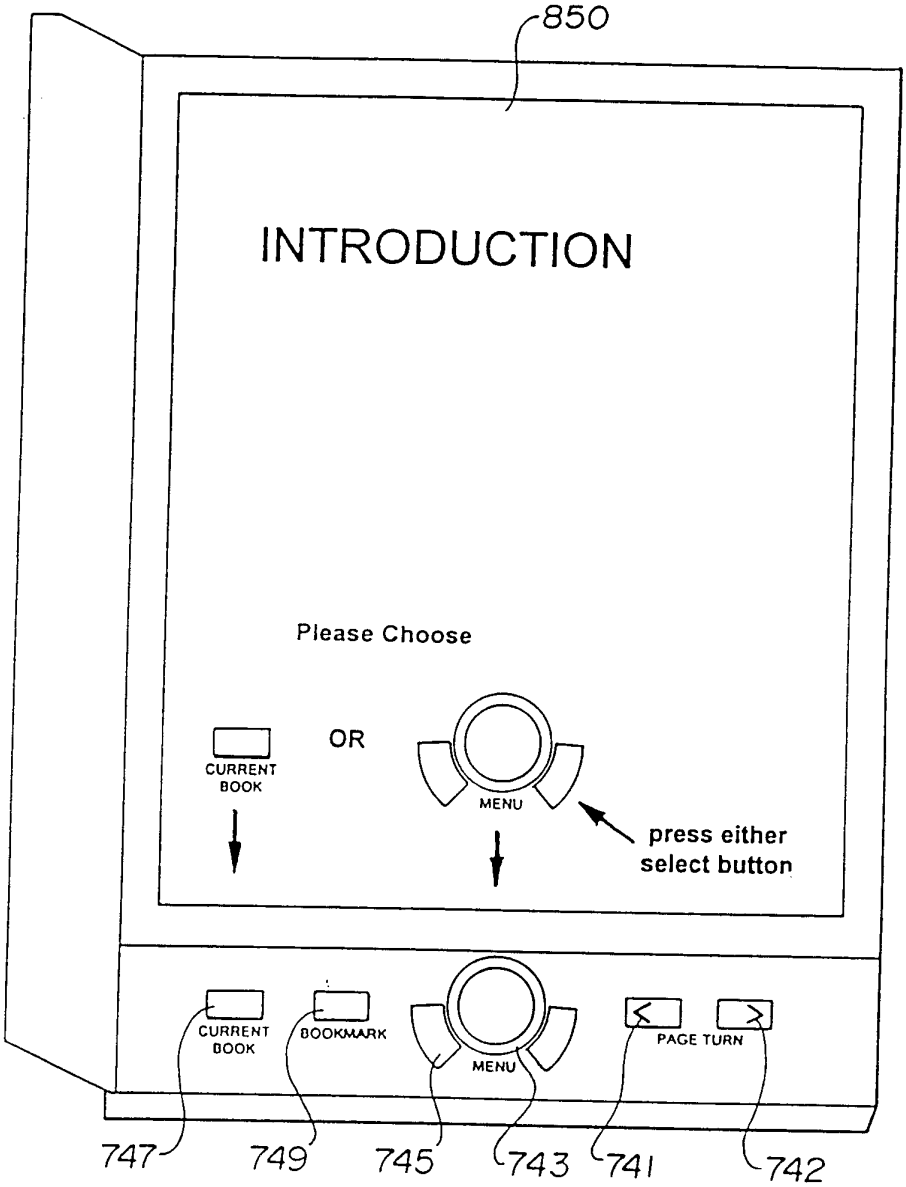
850
INTRODUCTION
Please Choose
OR
CURRENT BOOK
MENU
press either select button
CURRENT BOOK
BOOKMARK
MENU
PAGE TURN
747
749
745
743
741
742

Fig. 14b

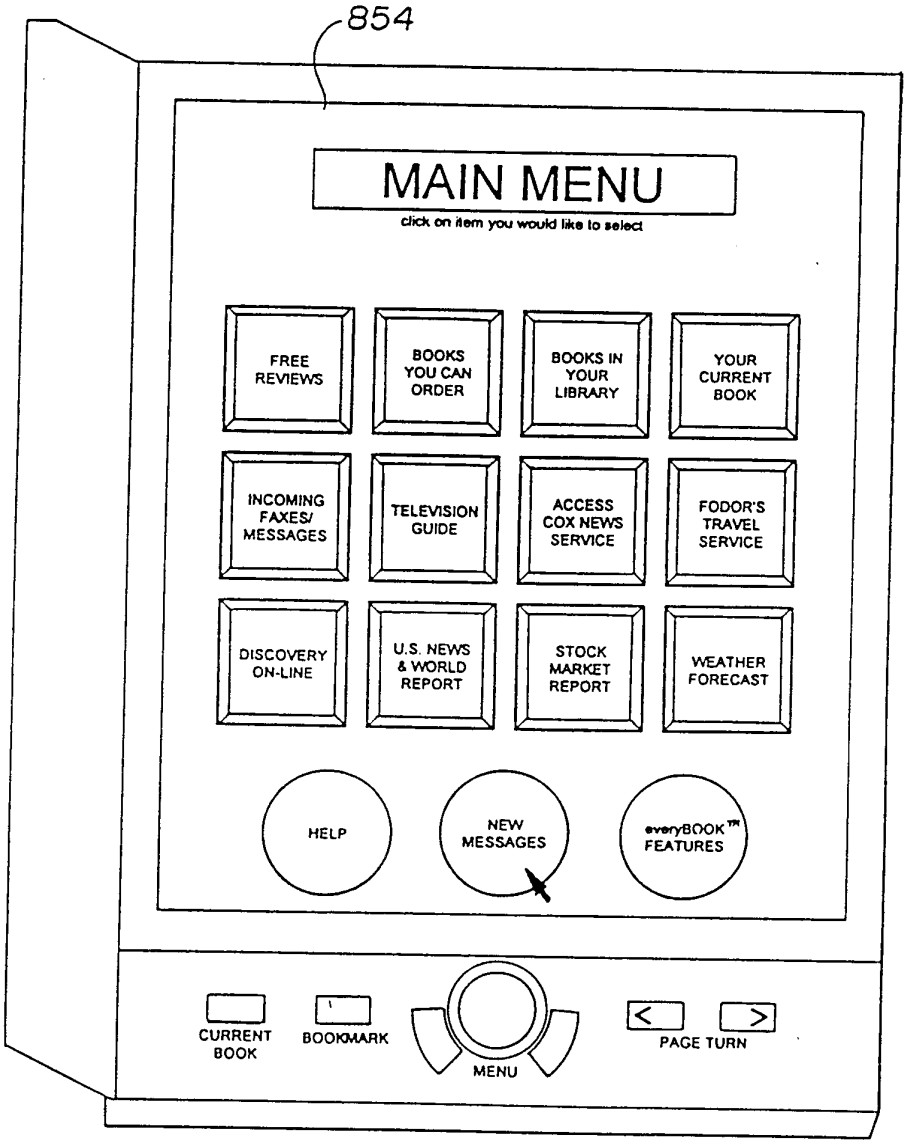
854
MAIN MENU
click on item you would like to select
FREE REVIEWS
BOOKS YOU CAN ORDER
BOOKS IN YOUR LIBRARY
YOUR CURRENT BOOK
INCOMING FAXES/ MESSAGES
TELEVISION GUIDE
ACCESS COX NEWS SERVICE
FODOR'S TRAVEL SERVICE
DISCOVERY ON-LINE
U.S. NEWS & WORLD REPORT
STOCK MARKET REPORT
WEATHER FORECAST
HELP
NEW MESSAGES
everyBOOK™ FEATURES
CURRENT BOOK
BOOKMARK
MENU
PAGE TURN

Fig. 14c

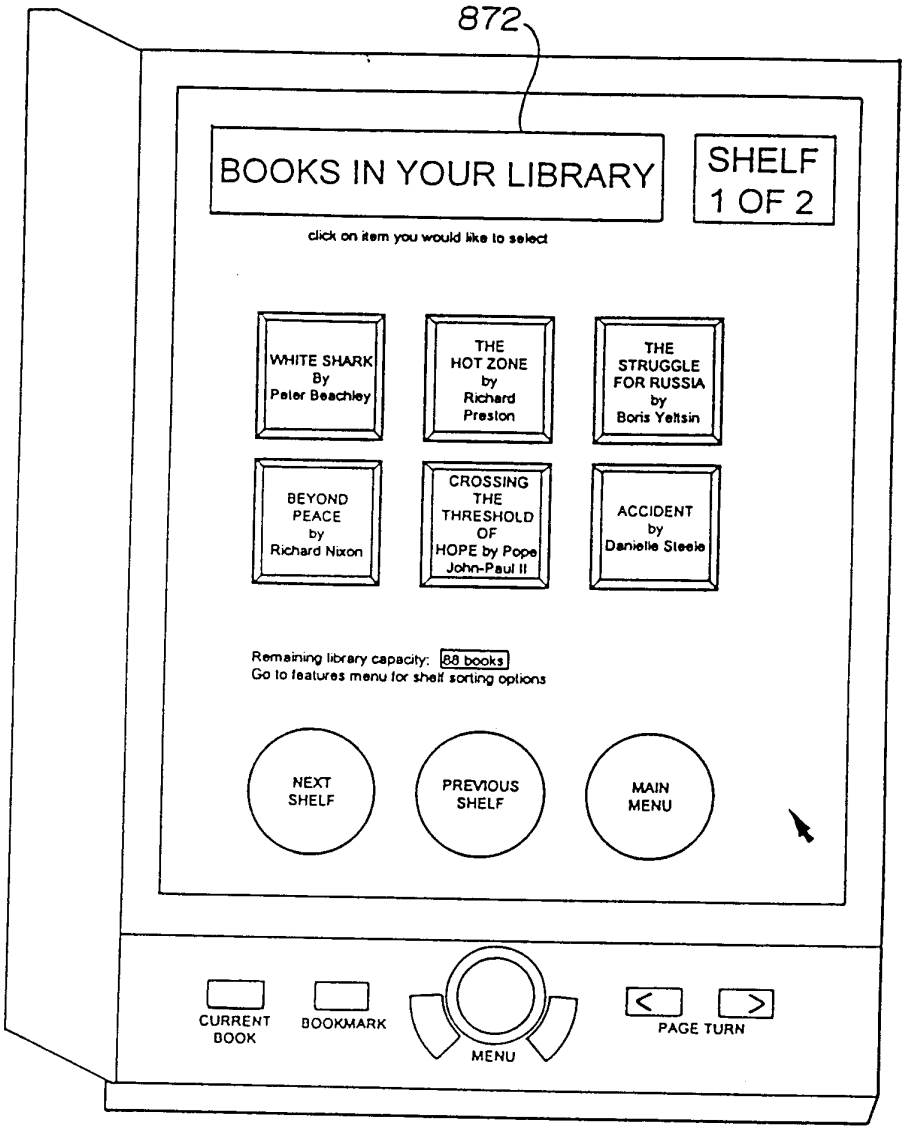
872
BOOKS IN YOUR LIBRARY
SHELF 1 OF 2
click on item you would like to select
WHITE SHARK By Peter Beachley
THE HOT ZONE by Richard Preston
THE STRUGGLE FOR RUSSIA by Boris Yeltsin
BEYOND PEACE by Richard Nixon
CROSSING THE THRESHOLD OF HOPE by Pope John-Paul II
ACCIDENT by Danielle Steele
Remaining library capacity: 88 books
Go to features menu for shelf sorting options
NEXT SHELF
PREVIOUS SHELF
MAIN MENU
CURRENT BOOK
BOOKMARK
MENU
PAGE TURN

Fig. 14d

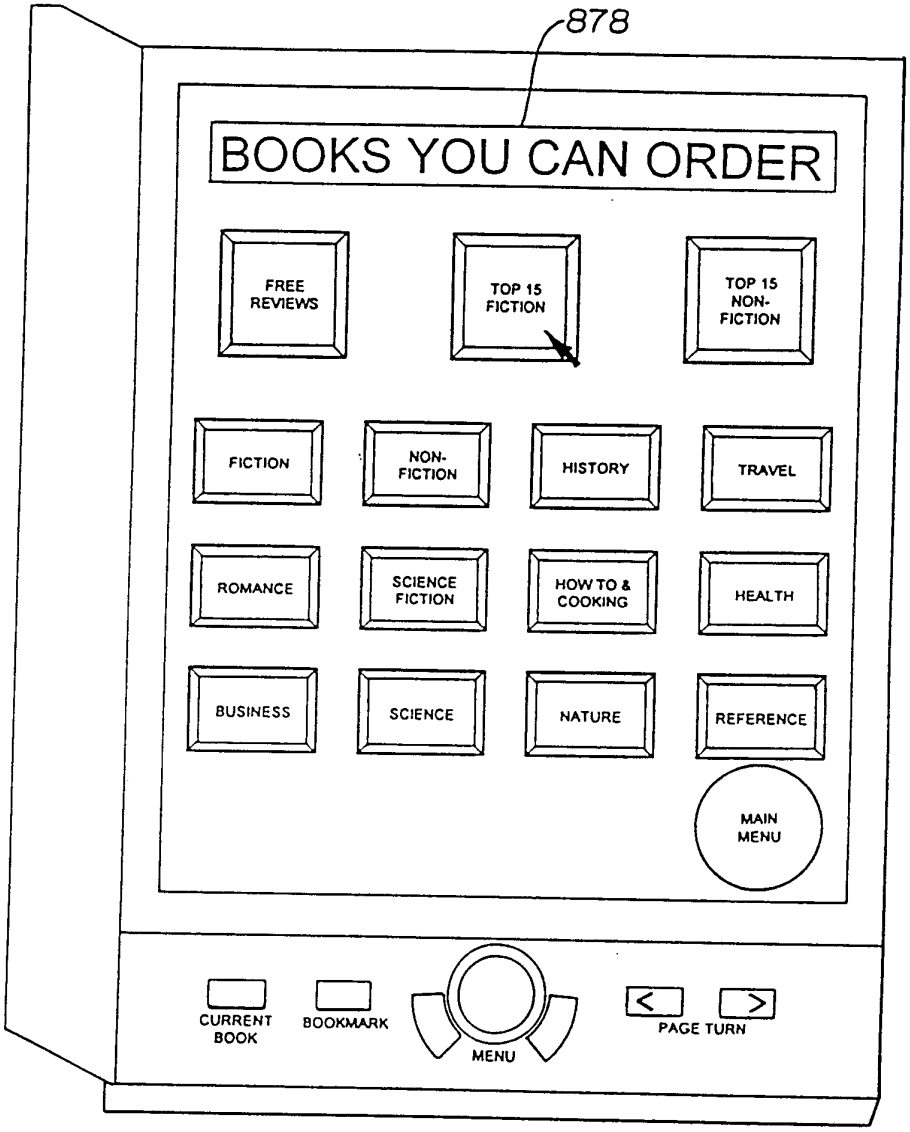
878
BOOKS YOU CAN ORDER
FREE REVIEWS
TOP 15 FICTION
TOP 15 NON-FICTION
FICTION
NON-FICTION
HISTORY
TRAVEL
ROMANCE
SCIENCE FICTION
HOW TO & COOKING
HEALTH
BUSINESS
SCIENCE
NATURE
REFERENCE
MAIN MENU
CURRENT BOOK
BOOKMARK
MENU
PAGE TURN

Fig. 14e

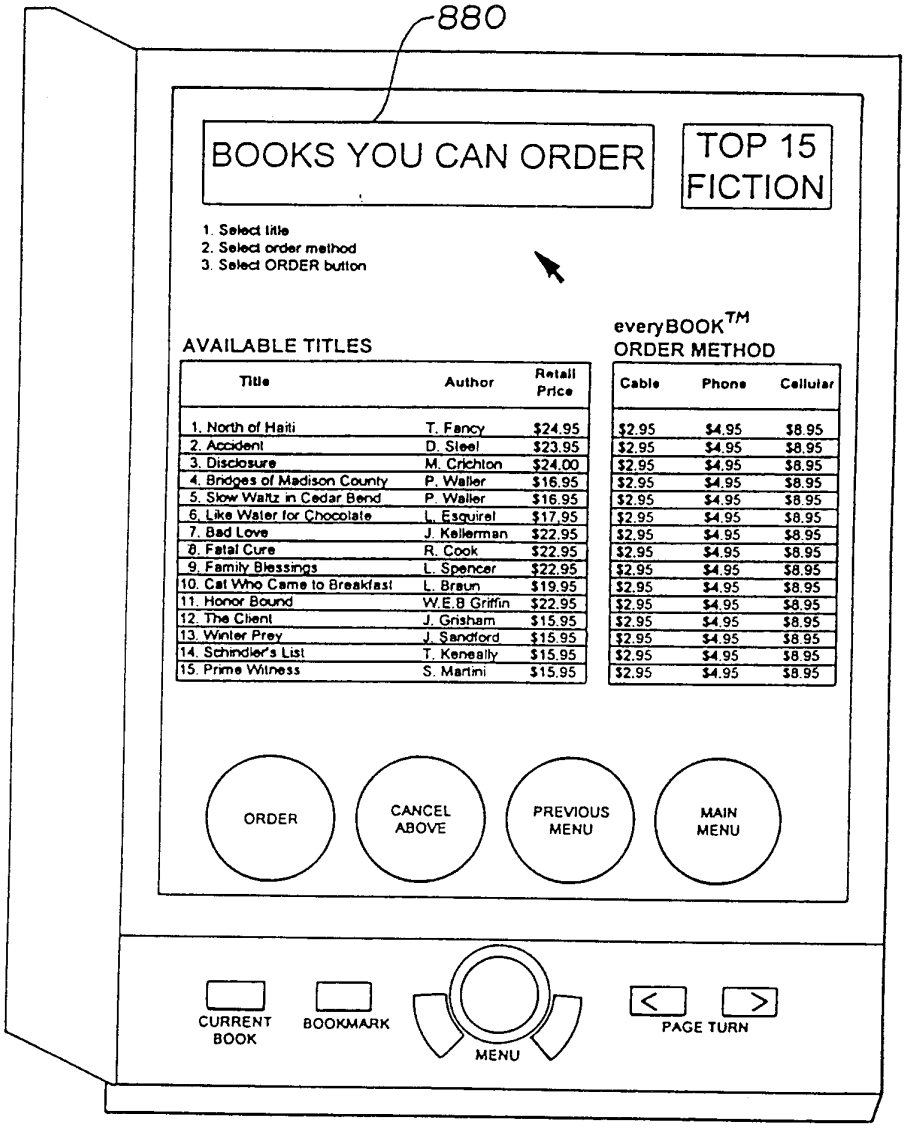

Title	Author	Retail Price	Cable	Phone	Cellular
1. North of Haiti	T. Fancy	$24.95	$2.95	$4.95	$8.95
2. Accident	D. Steel	$23.95	$2.95	$4.95	$8.95
3. Disclosure	M. Crichton	$24.00	$2.95	$4.95	$8.95
4. Bridges of Madison County	P. Waller	$16.95	$2.95	$4.95	$8.95
5. Slow Waltz in Cedar Bend	P. Waller	$16.95	$2.95	$4.95	$8.95
6. Like Water for Chocolate	L. Esquirel	$17.95	$2.95	$4.95	$8.95
7. Bad Love	J. Kellerman	$22.95	$2.95	$4.95	$8.95
8. Fatal Cure	R. Cook	$22.95	$2.95	$4.95	$8.95
9. Family Blessings	L. Spencer	$22.95	$2.95	$4.95	$8.95
10. Cat Who Came to Breakfast	L. Braun	$19.95	$2.95	$4.95	$8.95
11. Honor Bound	W.E.B Griffin	$22.95	$2.95	$4.95	$8.95
12. The Client	J. Grisham	$15.95	$2.95	$4.95	$8.95
13. Winter Prey	J. Sandford	$15.95	$2.95	$4.95	$8.95
14. Schindler's List	T. Keneally	$15.95	$2.95	$4.95	$8.95
15. Prime Witness	S. Martini	$15.95	$2.95	$4.95	$8.95

Fig. 14f

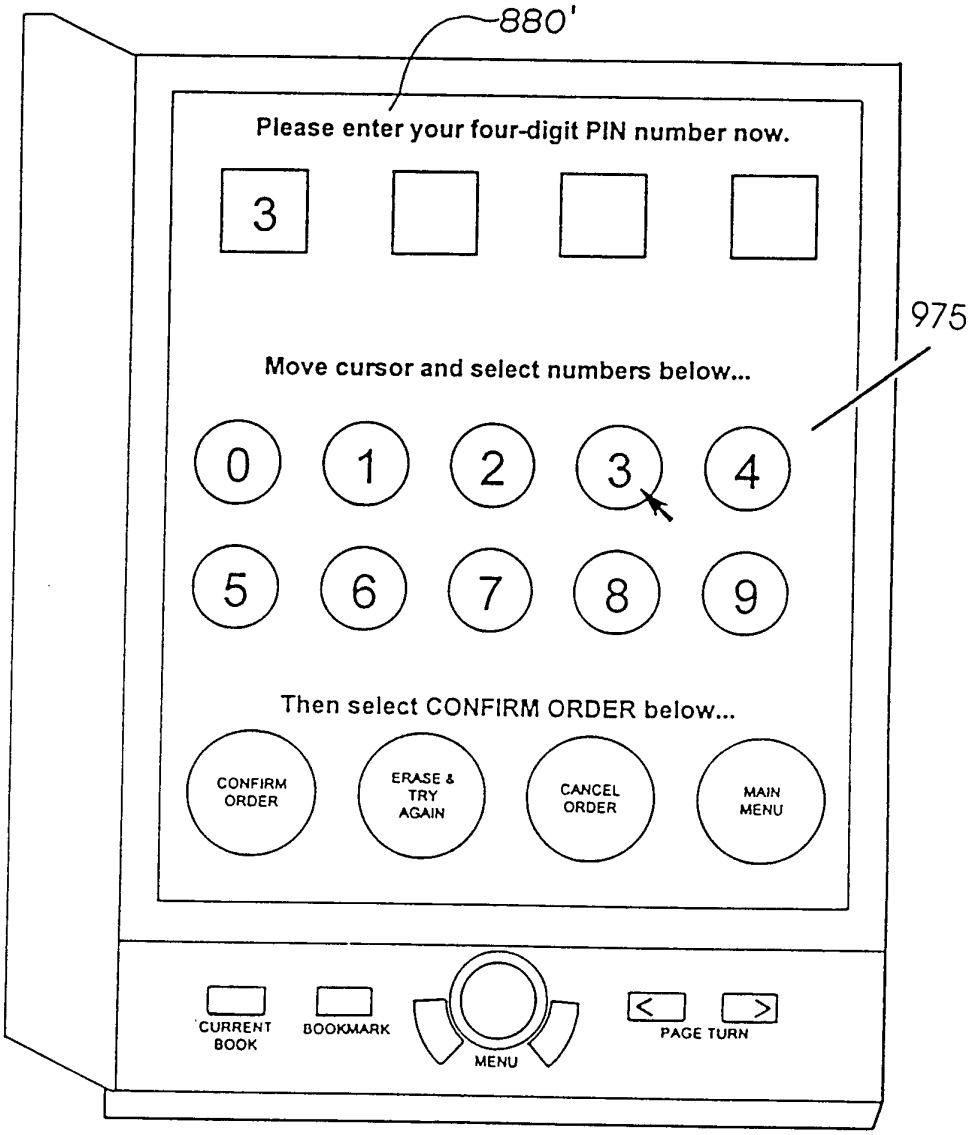
880'
Please enter your four-digit PIN number now.
3
975
Move cursor and select numbers below...
0
1
2
3
4
5
6
7
8
9
Then select CONFIRM ORDER below...
CONFIRM ORDER
ERASE & TRY AGAIN
CANCEL ORDER
MAIN MENU
CURRENT BOOK
BOOKMARK
MENU
PAGE TURN

Fig. 14g

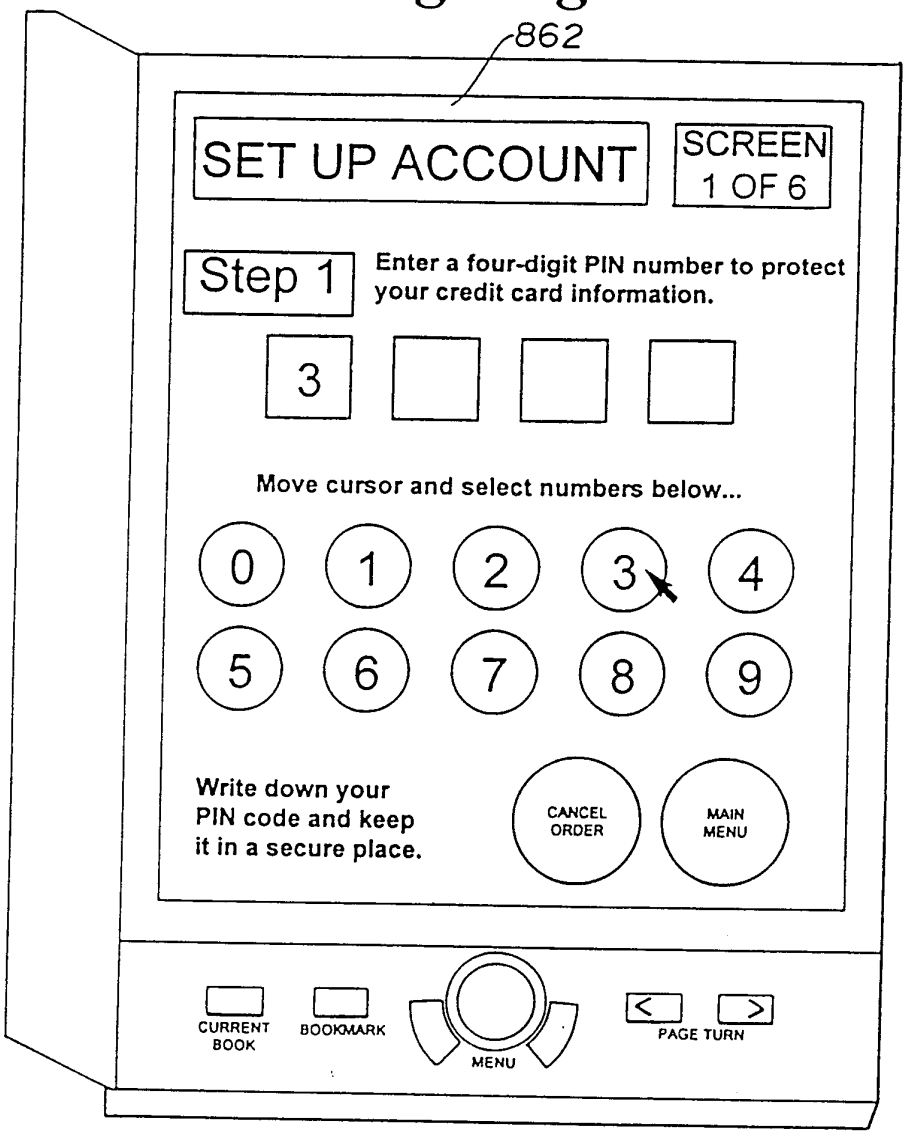
862
SET UP ACCOUNT
SCREEN 1 OF 6
Step 1
Enter a four-digit PIN number to protect your credit card information.
3
Move cursor and select numbers below...
0
1
2
3
4
5
6
7
8
9
Write down your PIN code and keep it in a secure place.
CANCEL ORDER
MAIN MENU
CURRENT BOOK
BOOKMARK
MENU
PAGE TURN

Fig. 14h

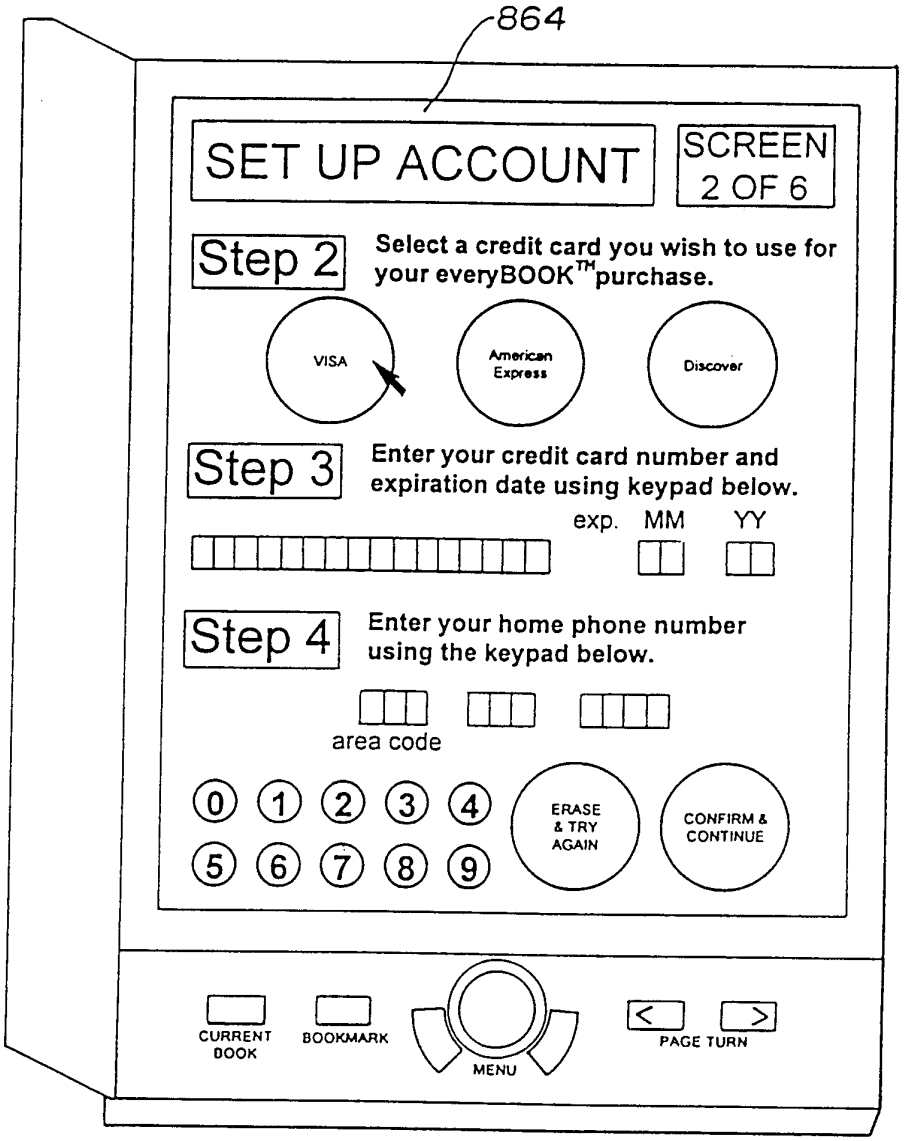
864
SET UP ACCOUNT
SCREEN 2 OF 6
Step 2
Select a credit card you wish to use for your everyBOOK™ purchase.
VISA
American Express
Discover
Step 3
Enter your credit card number and expiration date using keypad below.
exp. MM YY
Step 4
Enter your home phone number using the keypad below.
area code
0 1 2 3 4
5 6 7 8 9
ERASE & TRY AGAIN
CONFIRM & CONTINUE
CURRENT BOOK
BOOKMARK
MENU
PAGE TURN

Fig. 14i

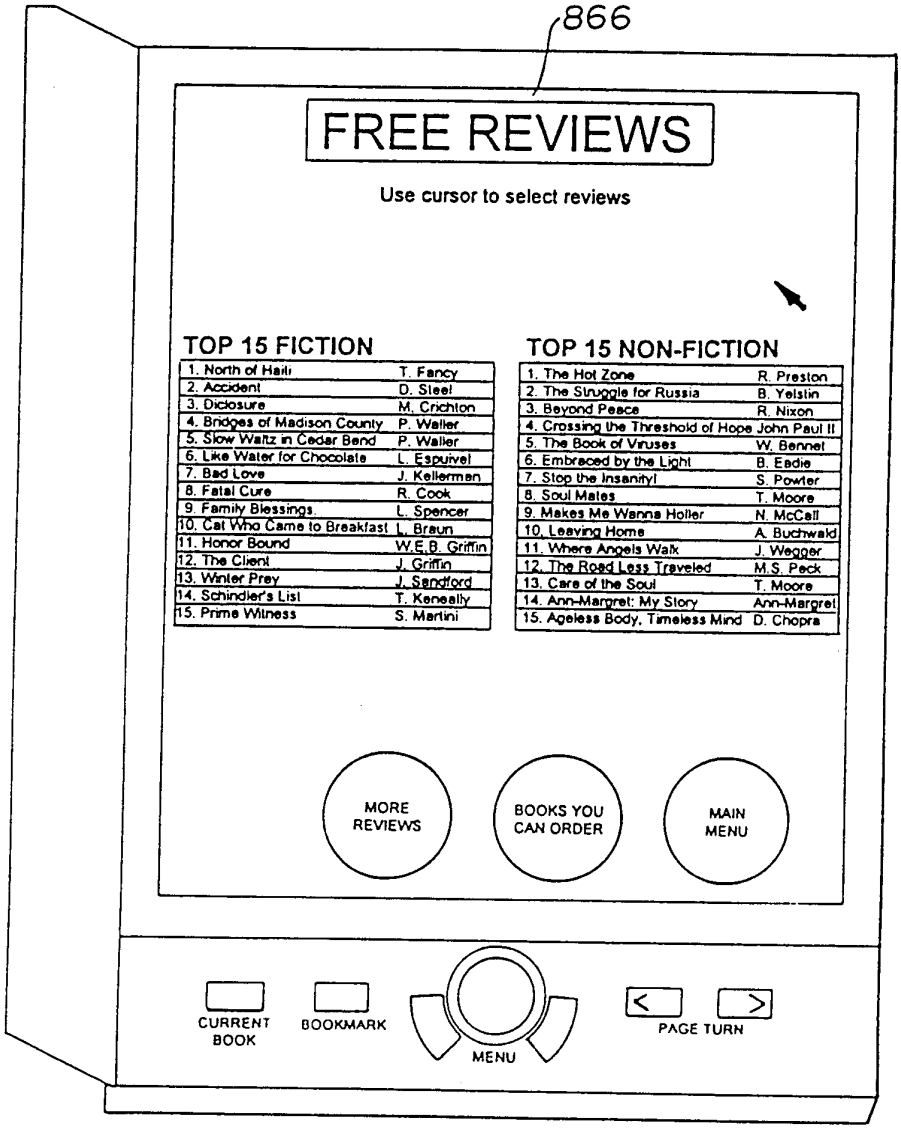
866
FREE REVIEWS
Use cursor to select reviews
TOP 15 FICTION
1. North of Haiti T. Fancy
2. Accident D. Steel
3. Dicloaure M. Crichton
4. Bridges of Madison County P. Waller
5. Slow Waltz in Cedar Bend P. Waller
6. Like Water for Chocolate L. Espuivel
7. Bad Love J. Kellerman
8. Fatal Cure R. Cook
9. Family Blessings L. Spencer
10. Cat Who Came to Breakfast L. Braun
11. Honor Bound W.E.B. Griffin
12. The Client J. Griffin
13. Winter Prey J. Sandford
14. Schindler's List T. Keneally
15. Prime Witness S. Martini
TOP 15 NON-FICTION
1. The Hot Zone R. Preston
2. The Struggle for Russia B. Yelstin
3. Beyond Peace R. Nixon
4. Crossing the Threshold of Hope John Paul II
5. The Book of Viruses W. Bennet
6. Embraced by the Light B. Eadie
7. Stop the Insanity! S. Powter
8. Soul Mates T. Moore
9. Makes Me Wanna Holler N. McCall
10. Leaving Home A. Buchwald
11. Where Angels Walk J. Wegger
12. The Road Less Traveled M.S. Peck
13. Care of the Soul T. Moore
14. Ann-Margret: My Story Ann-Margret
15. Ageless Body, Timeless Mind D. Chopra
MORE REVIEWS
BOOKS YOU CAN ORDER
MAIN MENU
CURRENT BOOK
BOOKMARK
MENU
PAGE TURN

Fig. 14j

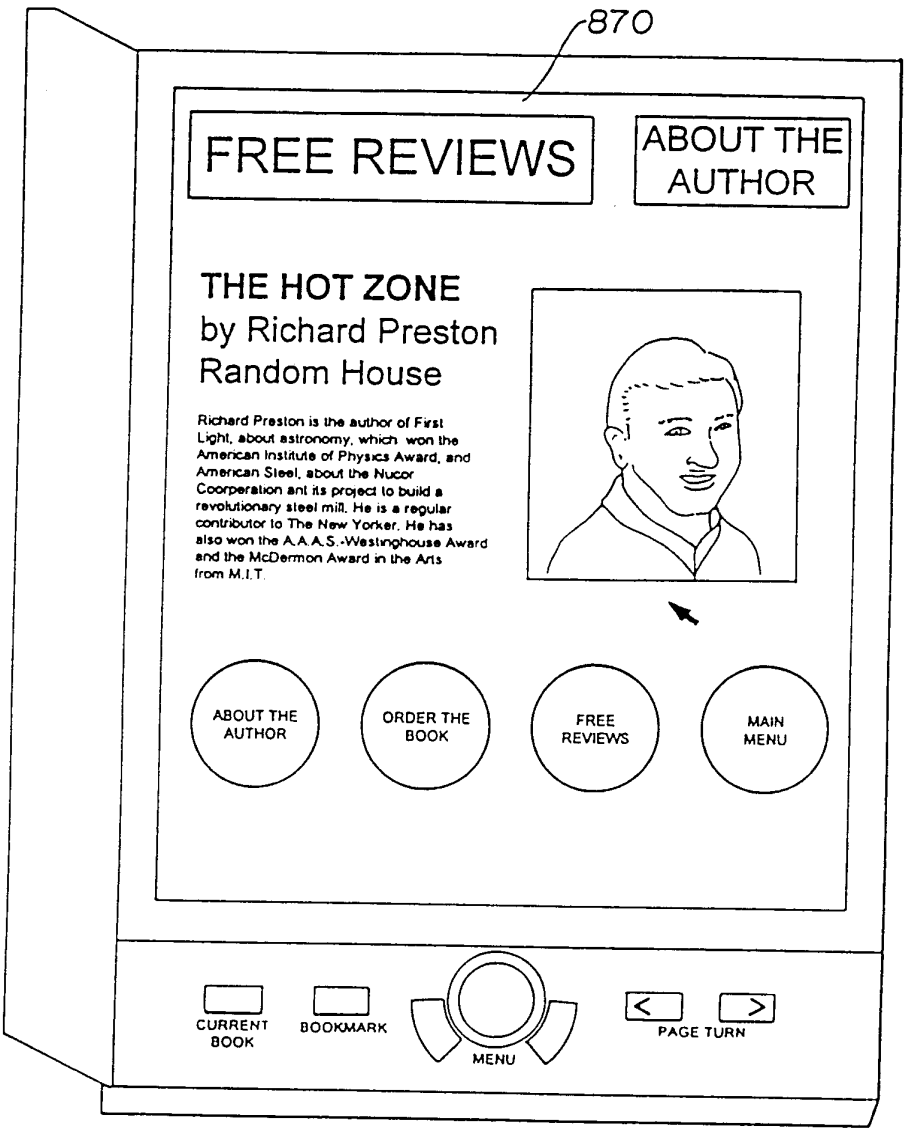
870
FREE REVIEWS
ABOUT THE AUTHOR
THE HOT ZONE
by Richard Preston
Random House
Richard Preston is the author of First Light, about astronomy, which won the American Institute of Physics Award, and American Steel, about the Nucor Coorperation ant its project to build a revolutionary steel mill. He is a regular contributor to The New Yorker. He has also won the A.A.A.S.-Westinghouse Award and the McDermon Award in the Arts from M.I.T.
ABOUT THE AUTHOR
ORDER THE BOOK
FREE REVIEWS
MAIN MENU
CURRENT BOOK
BOOKMARK
MENU
PAGE TURN

Fig. 15

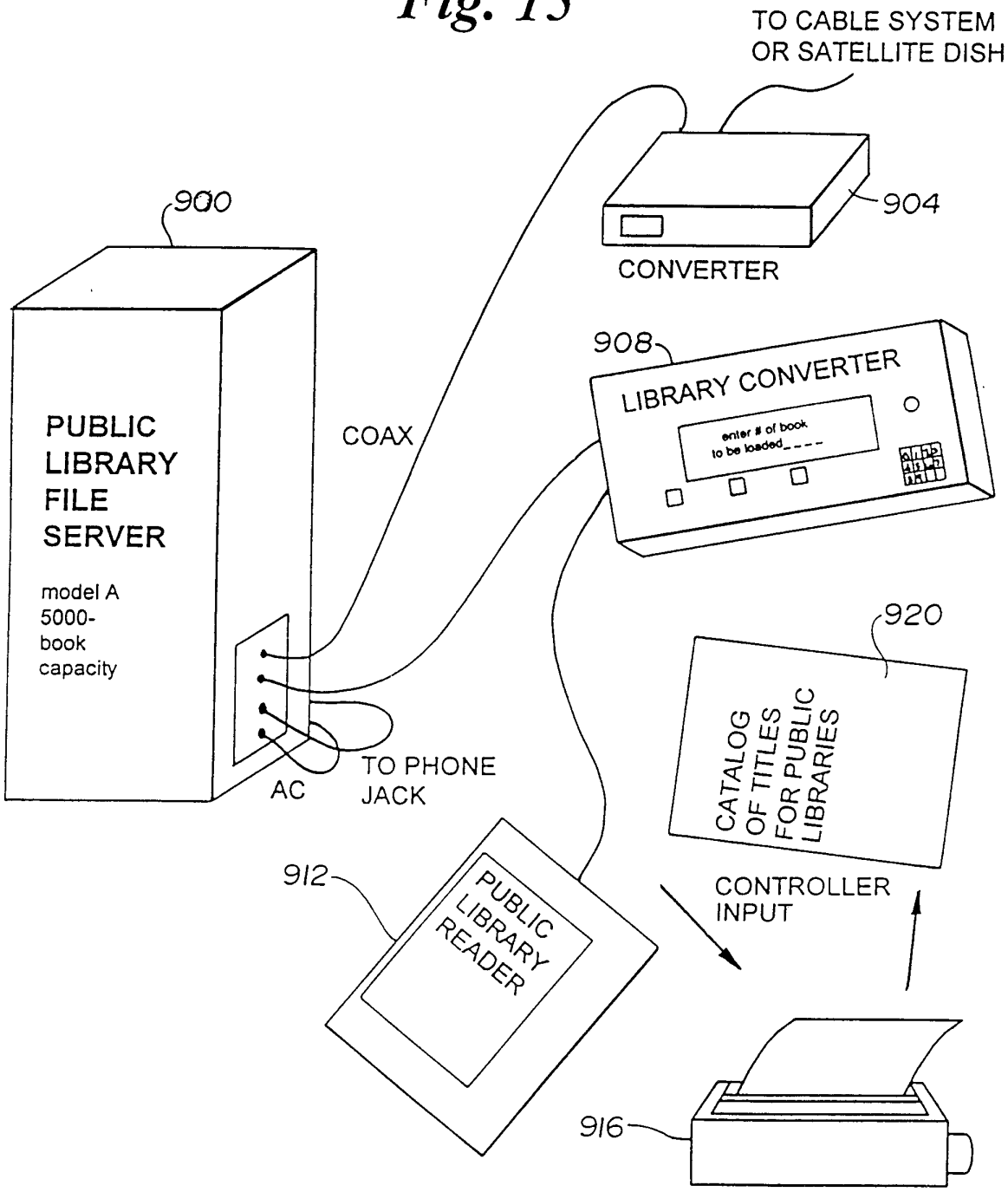
TO CABLE SYSTEM
OR SATELLITE DISH
900
904
CONVERTER
908
LIBRARY CONVERTER
enter # of book
to be loaded____
PUBLIC
LIBRARY
FILE
SERVER
model A
5000-
book
capacity
COAX
AC
TO PHONE
JACK
920
CATALOG
OF TITLES
FOR PUBLIC
LIBRARIES
912
PUBLIC
LIBRARY
READER
CONTROLLER
INPUT
916

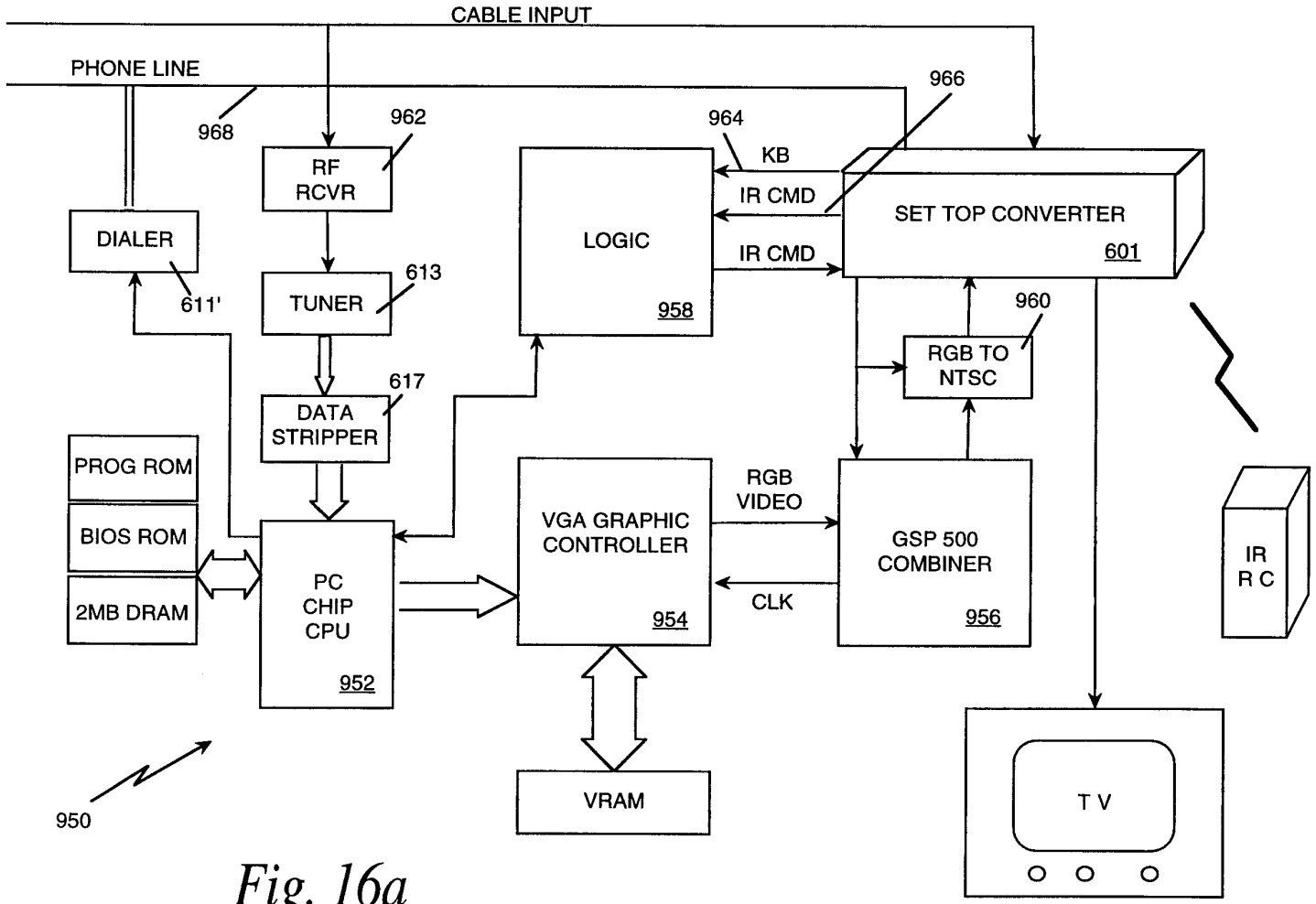
CABLE INPUT
PHONE LINE
968
962
964
966
RF RCVR
KB
IR CMD
IR CMD
SET TOP CONVERTER
601
LOGIC
958
DIALER
611'
TUNER
613
960
RGB TO NTSC
617
DATA STRIPPER
PROG ROM
BIOS ROM
2MB DRAM
PC CHIP CPU
952
VGA GRAPHIC CONTROLLER
954
RGB VIDEO
CLK
GSP 500 COMBINER
956
IR R C
VRAM
T V
950

Fig. 16a

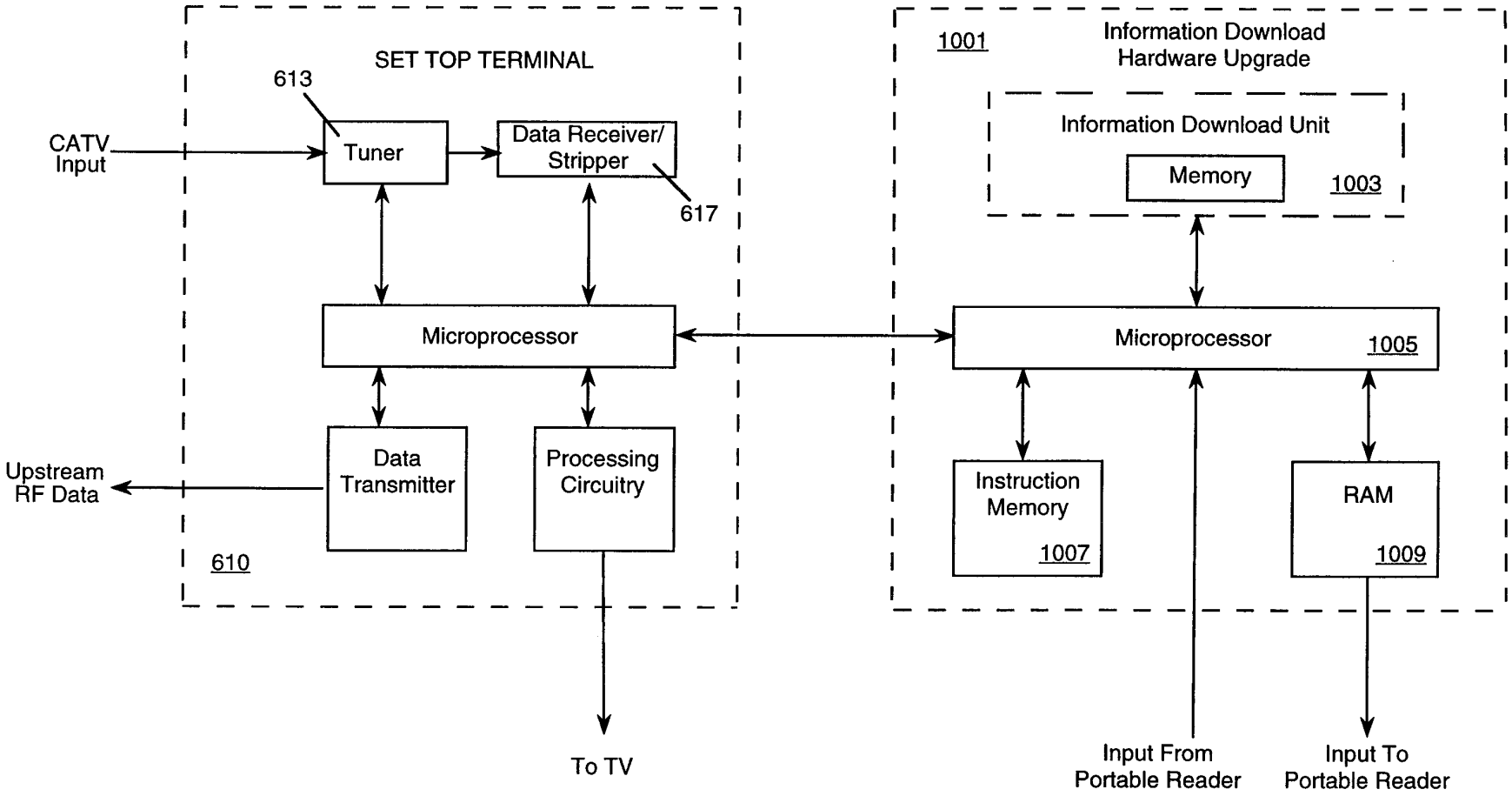
SET TOP TERMINAL
613
CATV Input
Tuner
Data Receiver/ Stripper
617
Microprocessor
Data Transmitter
Processing Circuitry
Upstream RF Data
610
To TV
1001
Information Download Hardware Upgrade
Information Download Unit
Memory
1003
Microprocessor
1005
Instruction Memory
1007
RAM
1009
Input From Portable Reader
Input To Portable Reader

Fig. 16b

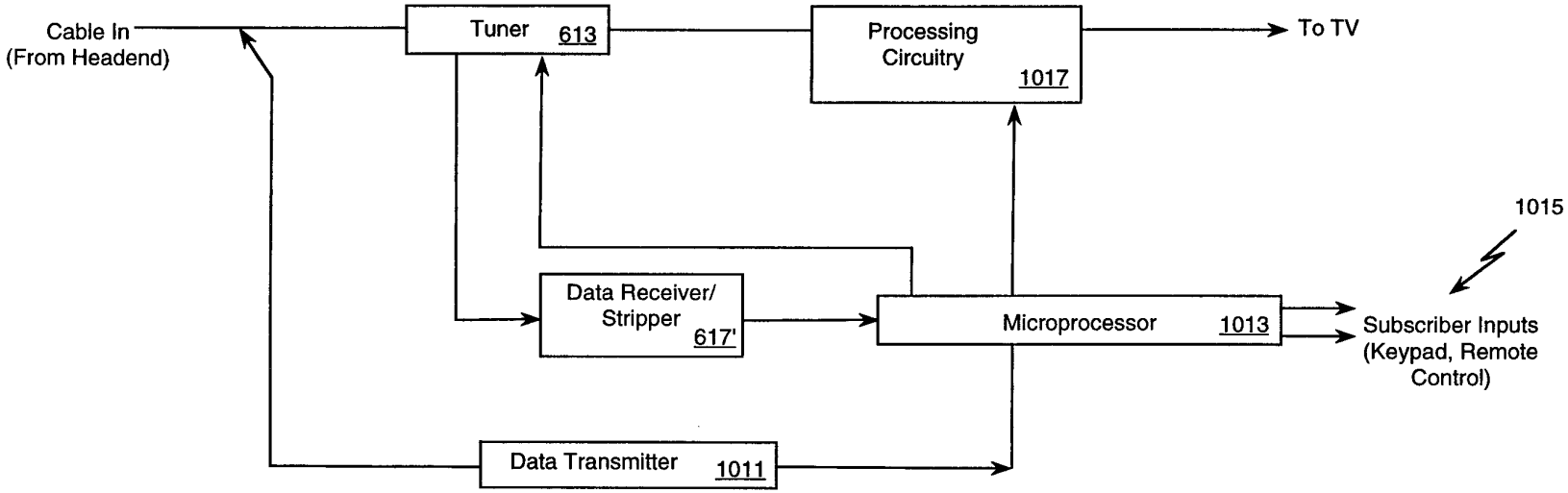
Cable In
(From Headend)
Tuner 613
Processing
Circuitry
1017
To TV
1015
Data Receiver/
Stripper
617'
Microprocessor 1013
Subscriber Inputs
(Keypad, Remote
Control)
Data Transmitter 1011

Fig. 17

Fig. 18a

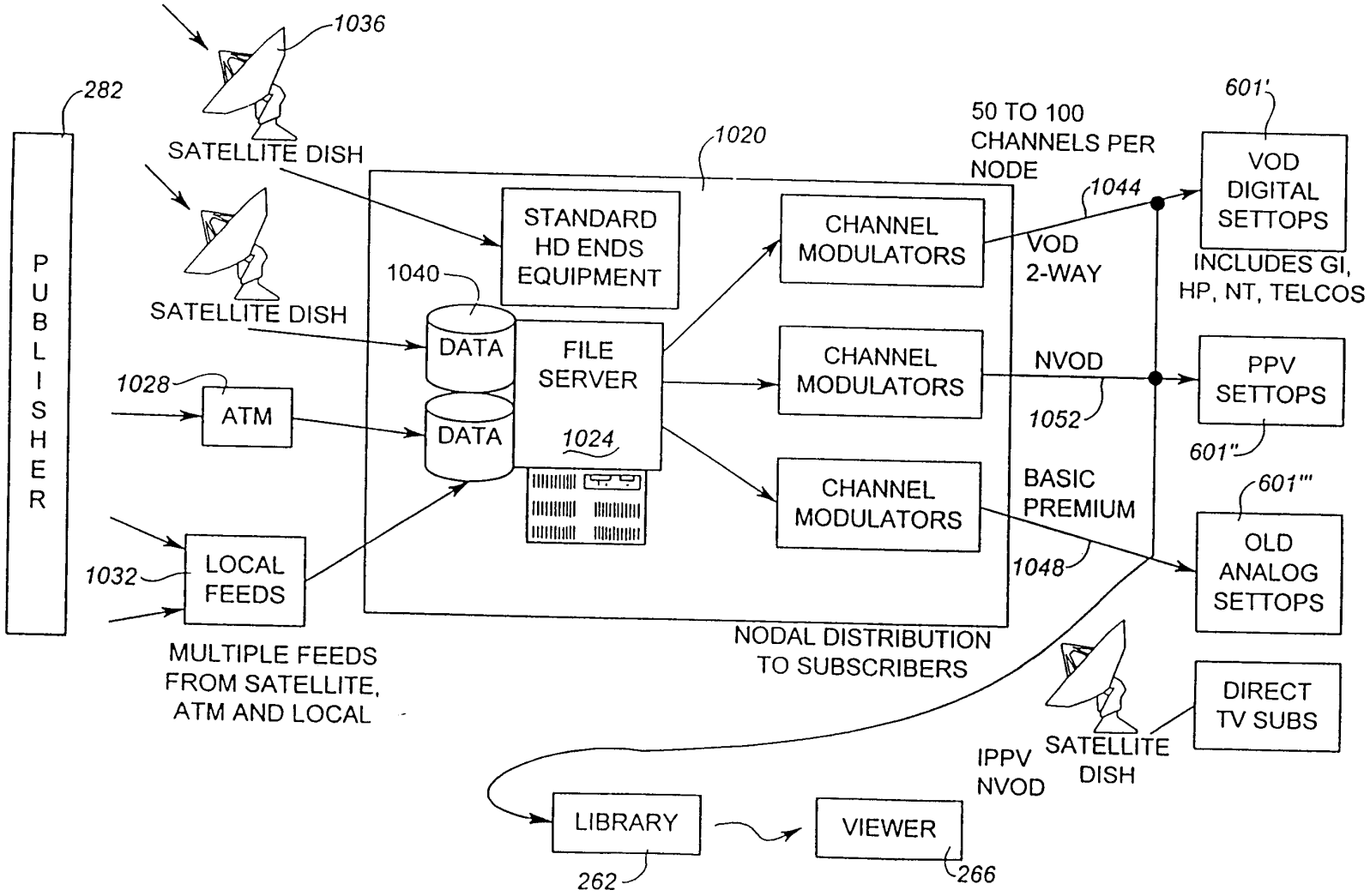
1036
282
SATELLITE DISH
1020
50 TO 100
CHANNELS PER
NODE
601'
PUBLISHER
STANDARD
HD ENDS
EQUIPMENT
CHANNEL
MODULATORS
1044
VOD
DIGITAL
SETTOPS
VOD
2-WAY
INCLUDES GI,
HP, NT, TELCOS
SATELLITE DISH
1040
DATA
FILE
SERVER
CHANNEL
MODULATORS
NVOD
PPV
SETTOPS
1028
ATM
DATA
1024
1052
601''
CHANNEL
MODULATORS
BASIC
PREMIUM
601'''
1032
LOCAL
FEEDS
1048
OLD
ANALOG
SETTOPS
NODAL DISTRIBUTION
TO SUBSCRIBERS
MULTIPLE FEEDS
FROM SATELLITE,
ATM AND LOCAL
DIRECT
TV SUBS
IPPV
NVOD
SATELLITE
DISH
LIBRARY
VIEWER
262
266

Fig. 18b

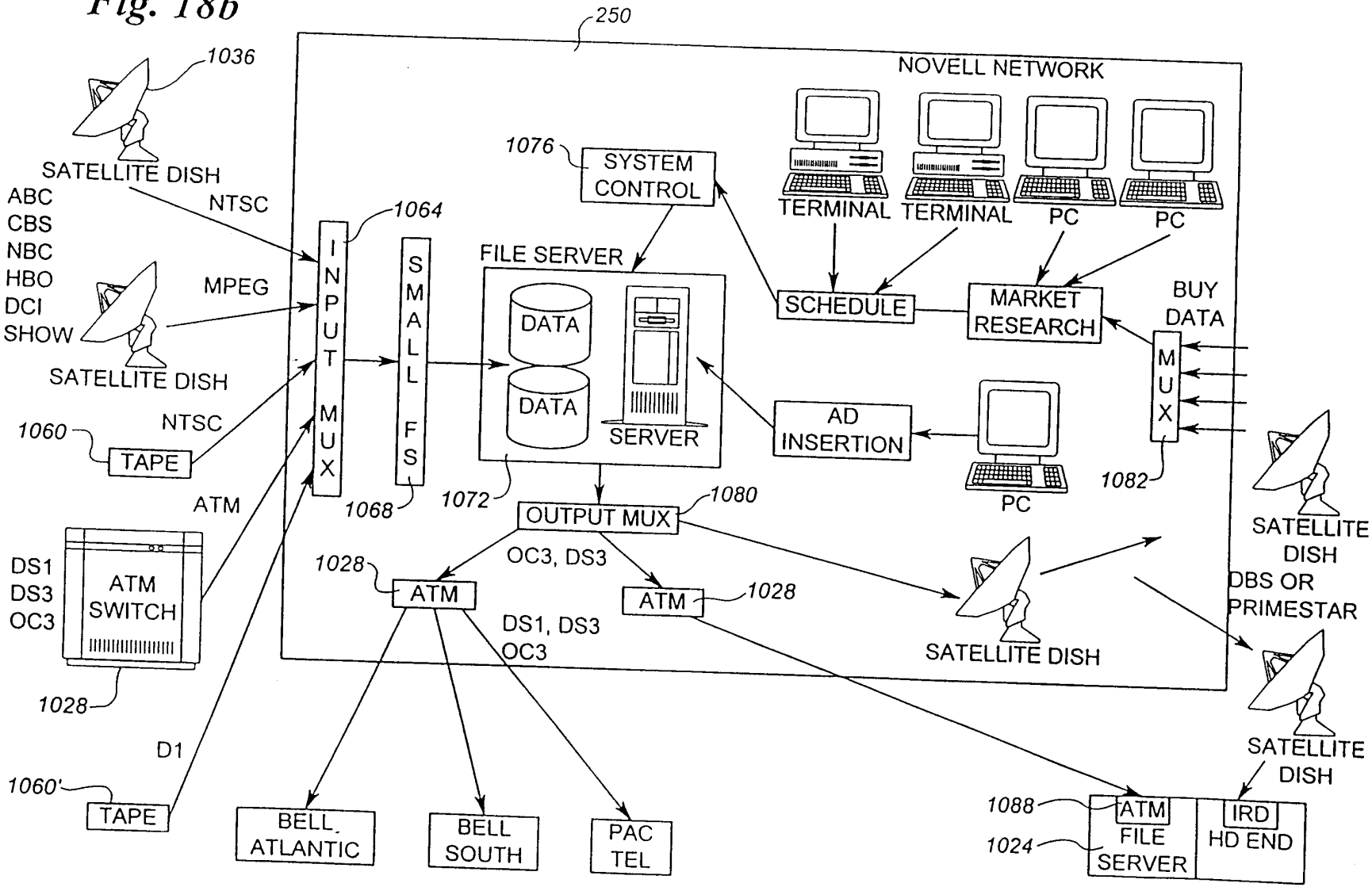
250
NOVELL NETWORK
1036
SATELLITE DISH
ABC
CBS
NBC
HBO
DCI
SHOW
NTSC
MPEG
SATELLITE DISH
NTSC
1060
TAPE
ATM
DS1
DS3
OC3
ATM SWITCH
1028
D1
1060'
TAPE
INPUT MUX
1064
SMALL FS
1068
1076
SYSTEM CONTROL
FILE SERVER
DATA
DATA
SERVER
1072
TERMINAL
TERMINAL
PC
PC
SCHEDULE
MARKET RESEARCH
BUY DATA
MUX
1082
AD INSERTION
PC
OUTPUT MUX
1080
OC3, DS3
1028
ATM
ATM
1028
DS1, DS3
OC3
SATELLITE DISH
SATELLITE DISH
DBS OR PRIMESTAR
SATELLITE DISH
BELL ATLANTIC
BELL SOUTH
PAC TEL
1088
1024
ATM
FILE SERVER
IRD
HD END

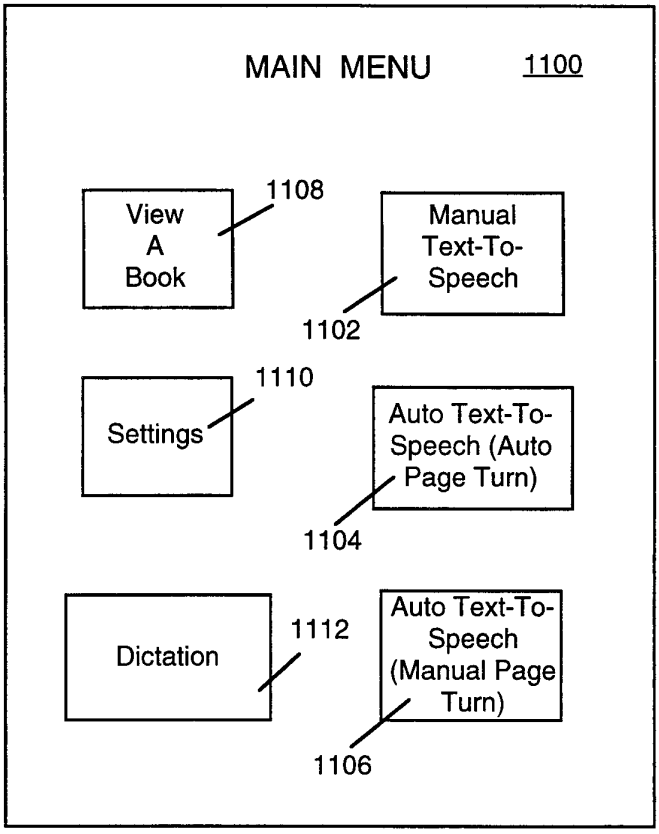
MAIN MENU
1100
View A Book
1108
Manual Text-To-Speech
1102
Settings
1110
Auto Text-To-Speech (Auto Page Turn)
1104
Dictation
1112
Auto Text-To-Speech (Manual Page Turn)
1106

Fig. 19

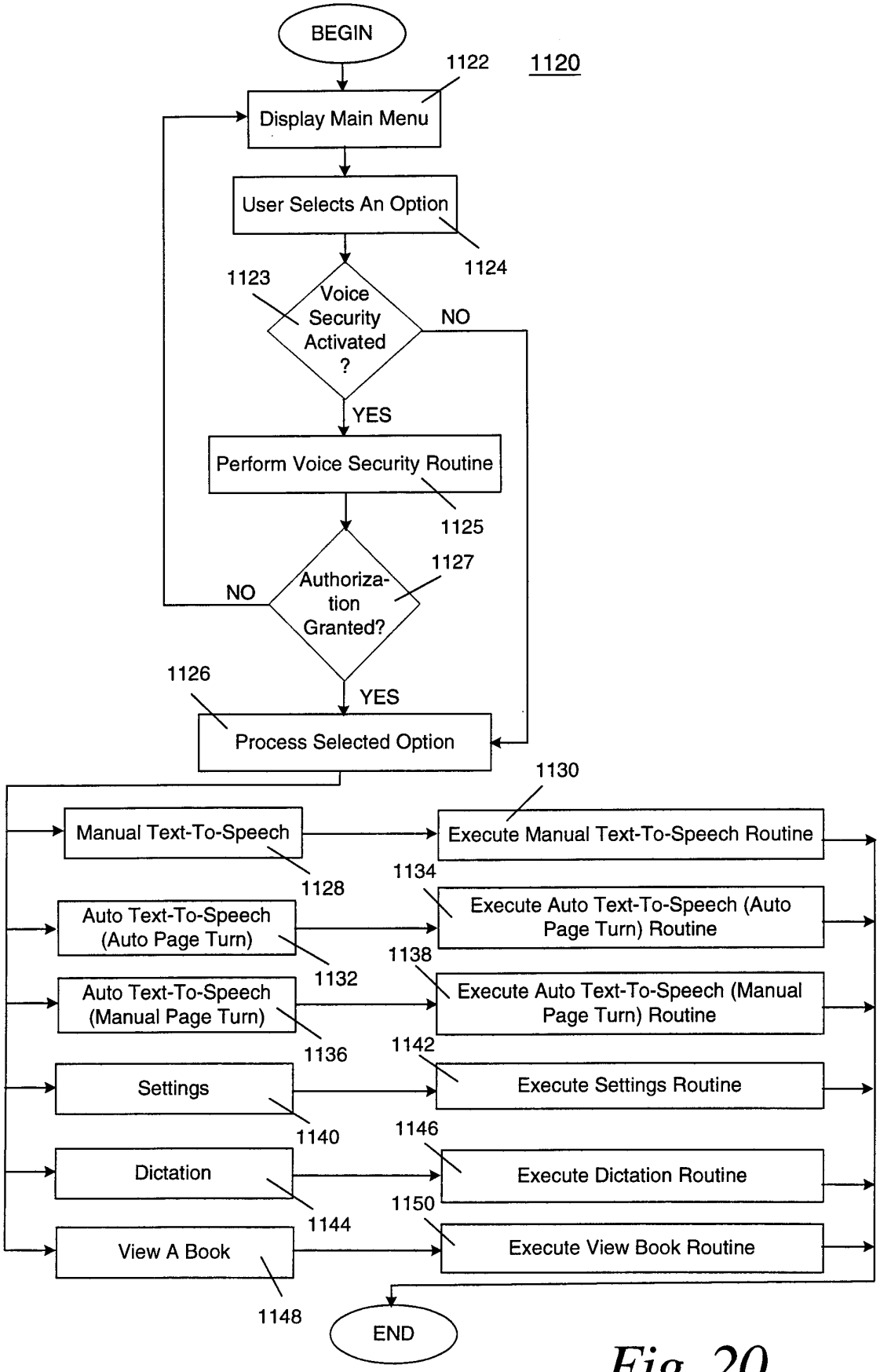
BEGIN
1120
1122
Display Main Menu
User Selects An Option
1124
1123
Voice Security Activated ?
NO
YES
Perform Voice Security Routine
1125
1127
Authoriza-tion Granted?
NO
1126
YES
Process Selected Option
1130
Manual Text-To-Speech
Execute Manual Text-To-Speech Routine
1128
1134
Auto Text-To-Speech (Auto Page Turn)
Execute Auto Text-To-Speech (Auto Page Turn) Routine
1132
1138
Auto Text-To-Speech (Manual Page Turn)
Execute Auto Text-To-Speech (Manual Page Turn) Routine
1136
1142
Settings
Execute Settings Routine
1140
1146
Dictation
Execute Dictation Routine
1144
1150
View A Book
Execute View Book Routine
1148
END

Fig. 20

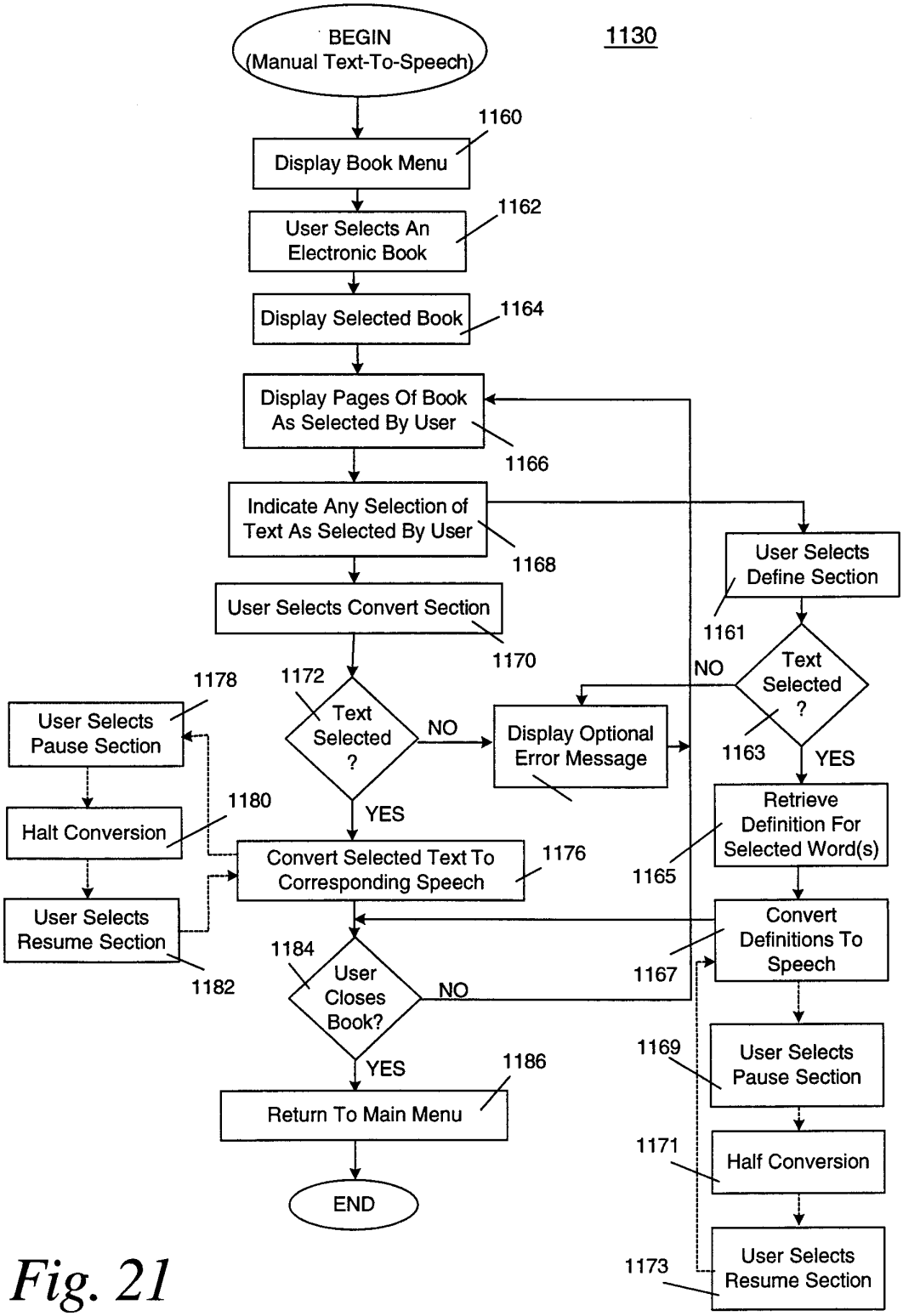
1130
BEGIN
(Manual Text-To-Speech)
1160
Display Book Menu
1162
User Selects An Electronic Book
1164
Display Selected Book
Display Pages Of Book As Selected By User
1166
Indicate Any Selection of Text As Selected By User
1168
User Selects Convert Section
1170
1172
Text Selected ?
NO
YES
Display Optional Error Message
1178
User Selects Pause Section
Halt Conversion
1180
User Selects Resume Section
1182
Convert Selected Text To Corresponding Speech
1176
1184
User Closes Book?
NO
YES
1186
Return To Main Menu
END
User Selects Define Section
1161
Text Selected ?
NO
1163
YES
Retrieve Definition For Selected Word(s)
1165
Convert Definitions To Speech
1167
1169
User Selects Pause Section
1171
Half Conversion
1173
User Selects Resume Section

Fig. 21

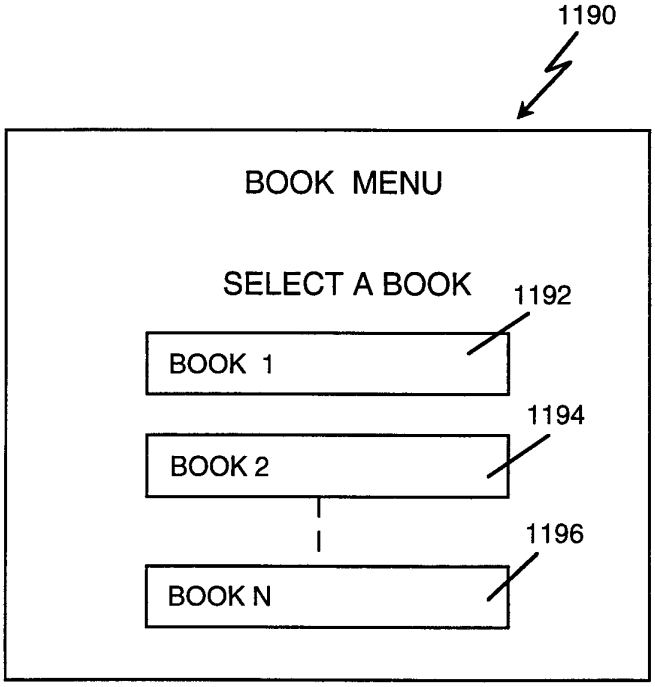
1190
BOOK MENU
SELECT A BOOK
1192
BOOK 1
1194
BOOK 2
1196
BOOK N

Fig. 22

Fig. 23

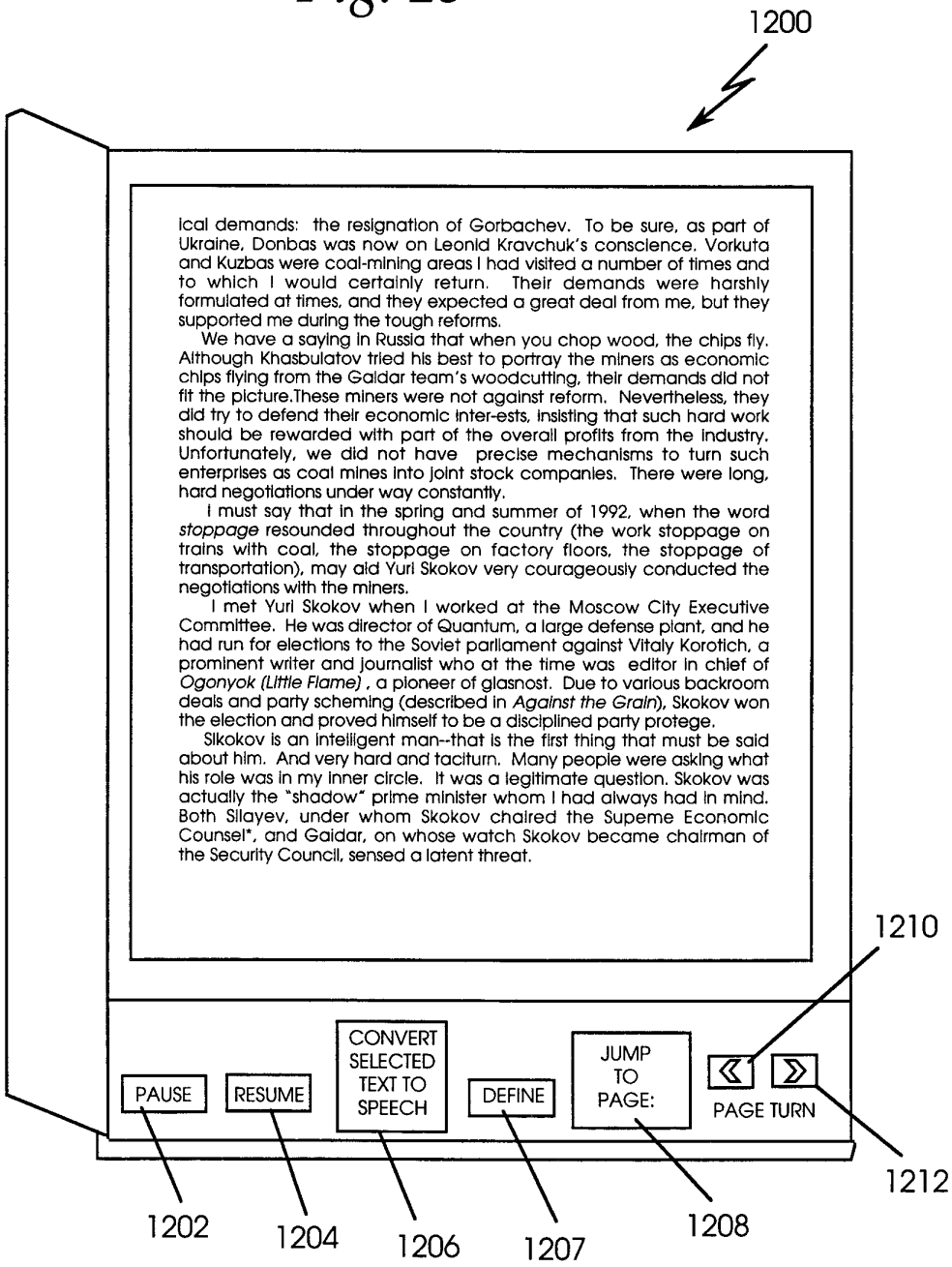
1200
ical demands: the resignation of Gorbachev. To be sure, as part of Ukraine, Donbas was now on Leonid Kravchuk's conscience. Vorkuta and Kuzbas were coal-mining areas I had visited a number of times and to which I would certainly return. Their demands were harshly formulated at times, and they expected a great deal from me, but they supported me during the tough reforms.
We have a saying in Russia that when you chop wood, the chips fly. Although Khasbulatov tried his best to portray the miners as economic chips flying from the Gaidar team's woodcutting, their demands did not fit the picture.These miners were not against reform. Nevertheless, they did try to defend their economic inter-ests, insisting that such hard work should be rewarded with part of the overall profits from the industry. Unfortunately, we did not have precise mechanisms to turn such enterprises as coal mines into joint stock companies. There were long, hard negotiations under way constantly.
I must say that in the spring and summer of 1992, when the word *stoppage* resounded throughout the country (the work stoppage on trains with coal, the stoppage on factory floors, the stoppage of transportation), may aid Yuri Skokov very courageously conducted the negotiations with the miners.
I met Yuri Skokov when I worked at the Moscow City Executive Committee. He was director of Quantum, a large defense plant, and he had run for elections to the Soviet parliament against Vitaly Korotich, a prominent writer and journalist who at the time was editor in chief of *Ogonyok (Little Flame)* , a pioneer of glasnost. Due to various backroom deals and party scheming (described in *Against the Grain*), Skokov won the election and proved himself to be a disciplined party protege.
Sikokov is an intelligent man--that is the first thing that must be said about him. And very hard and taciturn. Many people were asking what his role was in my inner circle. It was a legitimate question. Skokov was actually the "shadow" prime minister whom I had always had in mind. Both Silayev, under whom Skokov chaired the Supeme Economic Counsel*, and Gaidar, on whose watch Skokov became chairman of the Security Council, sensed a latent threat.
1210
PAUSE
RESUME
CONVERT SELECTED TEXT TO SPEECH
DEFINE
JUMP TO PAGE:
PAGE TURN
1212
1202
1204
1206
1207
1208

Fig. 24

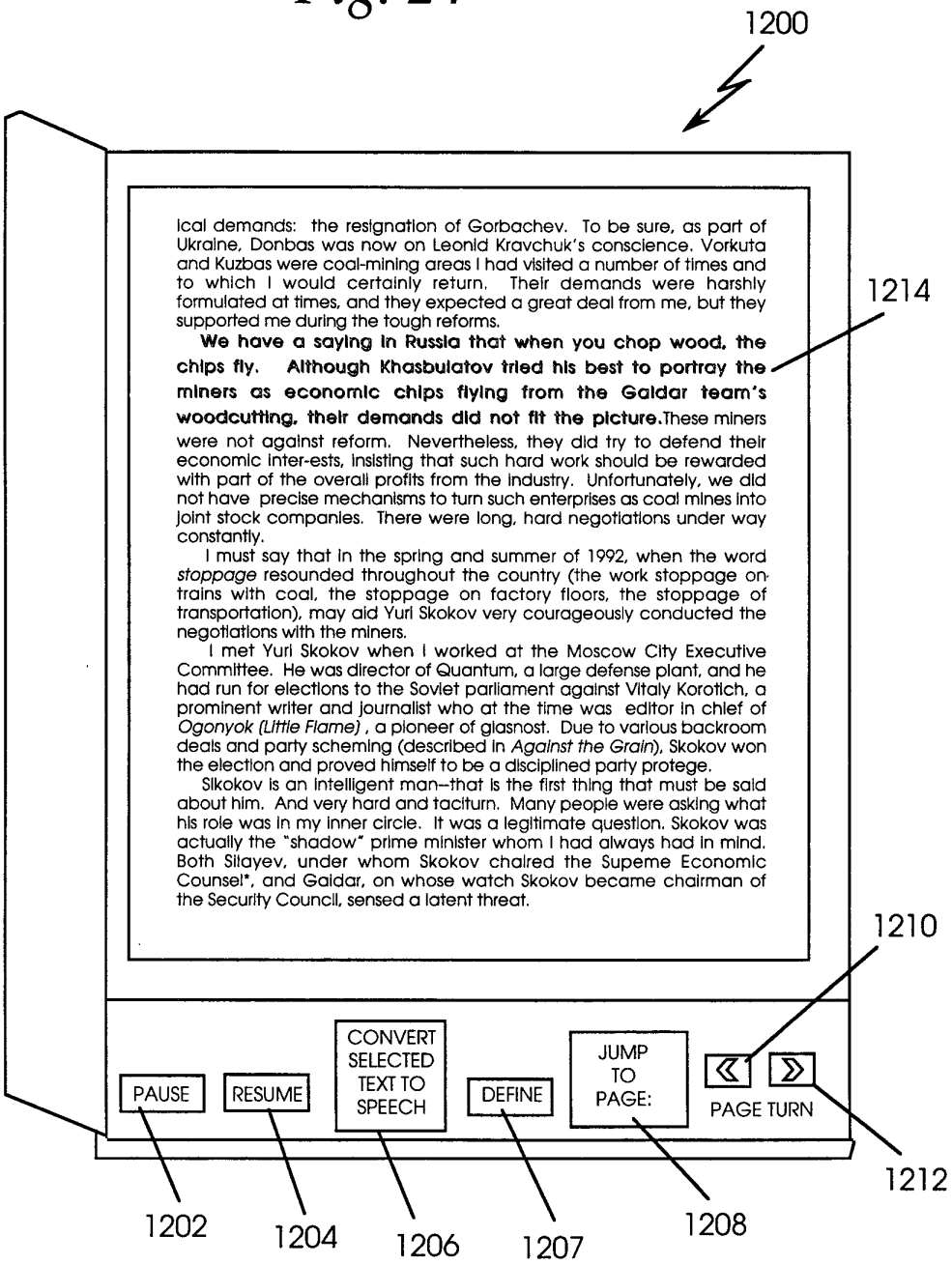
1200
ical demands: the resignation of Gorbachev. To be sure, as part of Ukraine, Donbas was now on Leonid Kravchuk's conscience. Vorkuta and Kuzbas were coal-mining areas I had visited a number of times and to which I would certainly return. Their demands were harshly formulated at times, and they expected a great deal from me, but they supported me during the tough reforms.
We have a saying in Russia that when you chop wood, the chips fly. Although Khasbulatov tried his best to portray the miners as economic chips flying from the Gaidar team's woodcutting, their demands did not fit the picture.These miners were not against reform. Nevertheless, they did try to defend their economic inter-ests, insisting that such hard work should be rewarded with part of the overall profits from the industry. Unfortunately, we did not have precise mechanisms to turn such enterprises as coal mines into joint stock companies. There were long, hard negotiations under way constantly.
I must say that in the spring and summer of 1992, when the word stoppage resounded throughout the country (the work stoppage on trains with coal, the stoppage on factory floors, the stoppage of transportation), may aid Yuri Skokov very courageously conducted the negotiations with the miners.
I met Yuri Skokov when I worked at the Moscow City Executive Committee. He was director of Quantum, a large defense plant, and he had run for elections to the Soviet parliament against Vitaly Korotich, a prominent writer and journalist who at the time was editor in chief of Ogonyok (Little Flame), a pioneer of glasnost. Due to various backroom deals and party scheming (described in Against the Grain), Skokov won the election and proved himself to be a disciplined party protege.
Sikokov is an intelligent man—that is the first thing that must be said about him. And very hard and taciturn. Many people were asking what his role was in my inner circle. It was a legitimate question. Skokov was actually the "shadow" prime minister whom I had always had in mind. Both Silayev, under whom Skokov chaired the Supeme Economic Counsel*, and Gaidar, on whose watch Skokov became chairman of the Security Council, sensed a latent threat.
1214
1210
PAUSE
RESUME
CONVERT SELECTED TEXT TO SPEECH
DEFINE
JUMP TO PAGE:
PAGE TURN
1212
1202
1204
1206
1207
1208

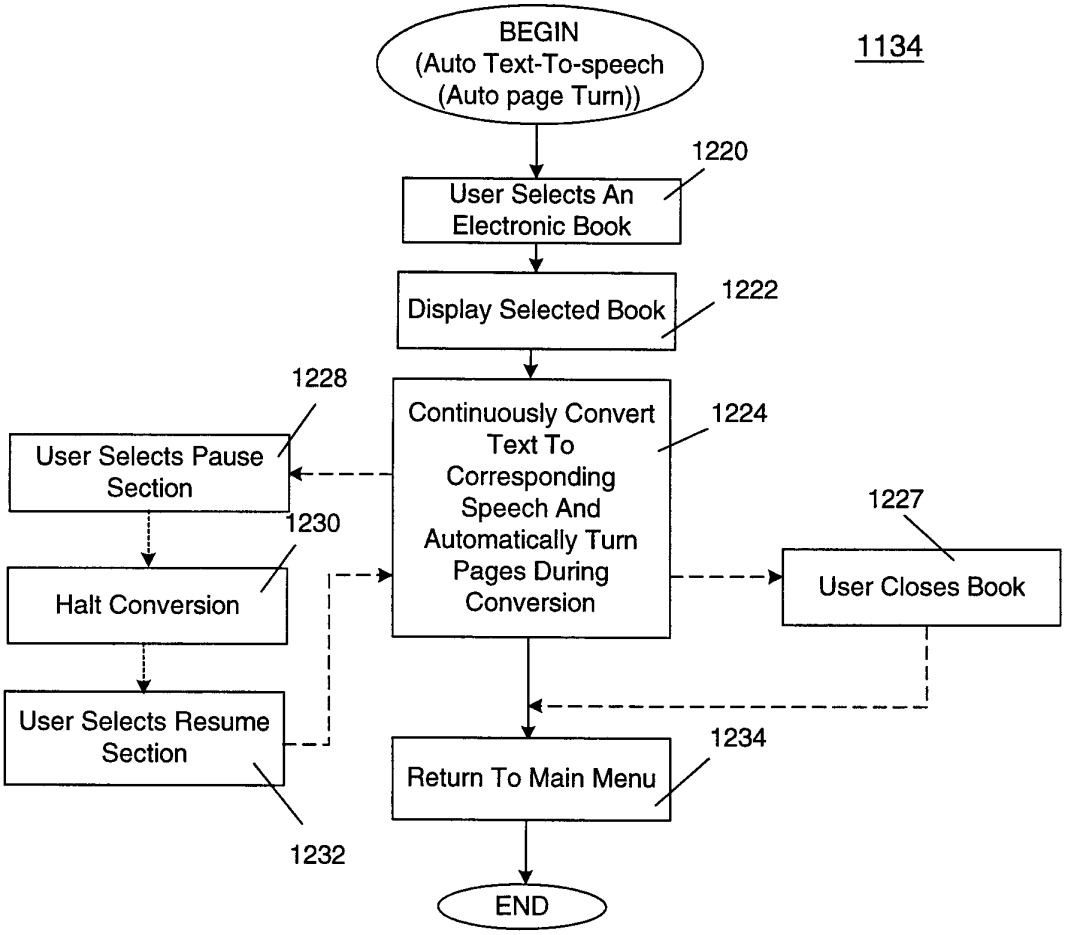
BEGIN
(Auto Text-To-speech
(Auto page Turn))
1134
1220
User Selects An
Electronic Book
Display Selected Book
1222
1228
User Selects Pause
Section
Continuously Convert
Text To
Corresponding
Speech And
Automatically Turn
Pages During
Conversion
1224
1227
User Closes Book
1230
Halt Conversion
User Selects Resume
Section
1232
1234
Return To Main Menu
END

Fig. 25

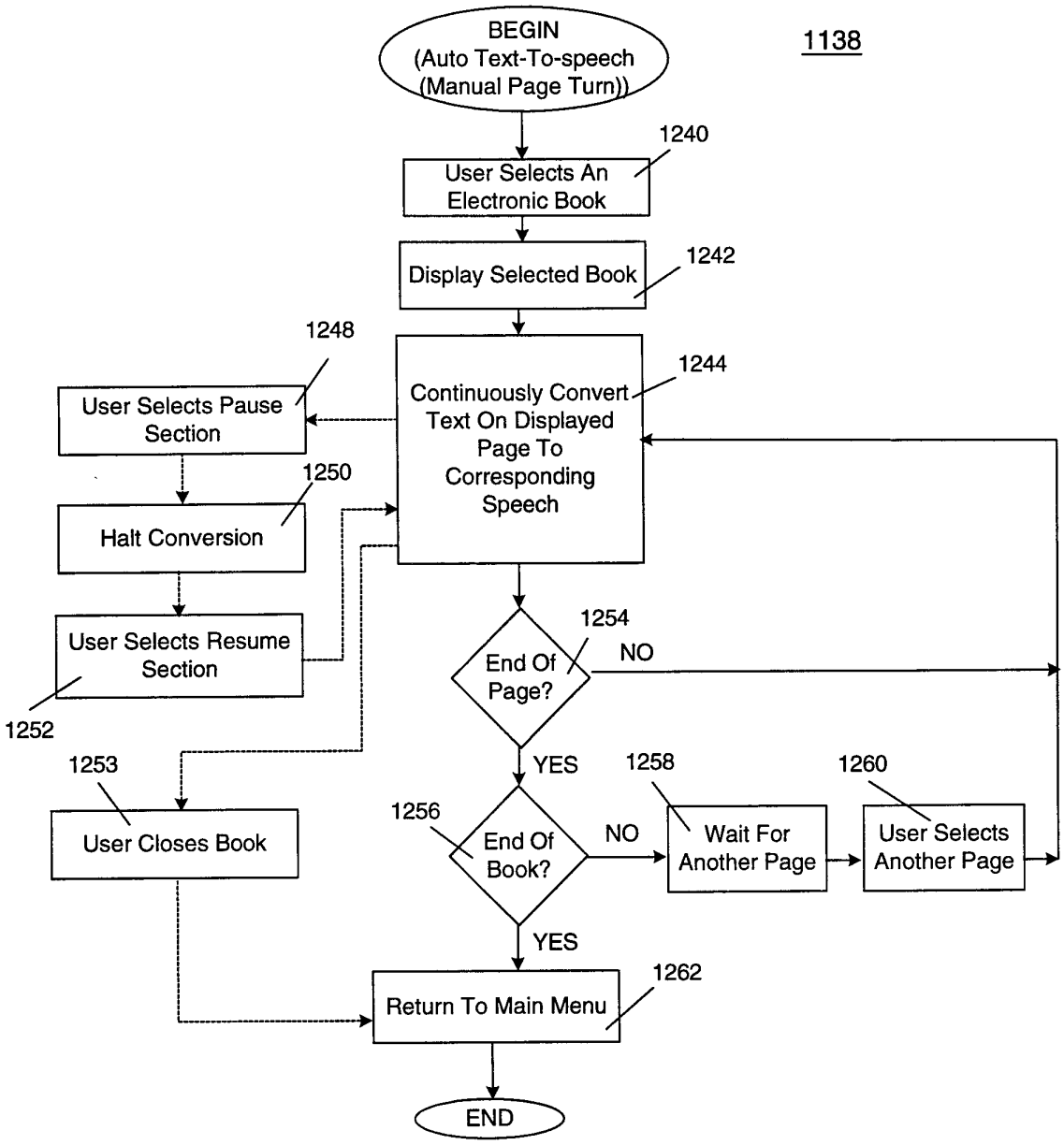
BEGIN
(Auto Text-To-speech
(Manual Page Turn))
1138
1240
User Selects An
Electronic Book
Display Selected Book
1242
1248
User Selects Pause
Section
1244
Continuously Convert
Text On Displayed
Page To
Corresponding
Speech
1250
Halt Conversion
User Selects Resume
Section
1252
1254
End Of
Page?
NO
YES
1253
User Closes Book
1256
End Of
Book?
NO
1258
Wait For
Another Page
1260
User Selects
Another Page
YES
1262
Return To Main Menu
END

Fig. 26

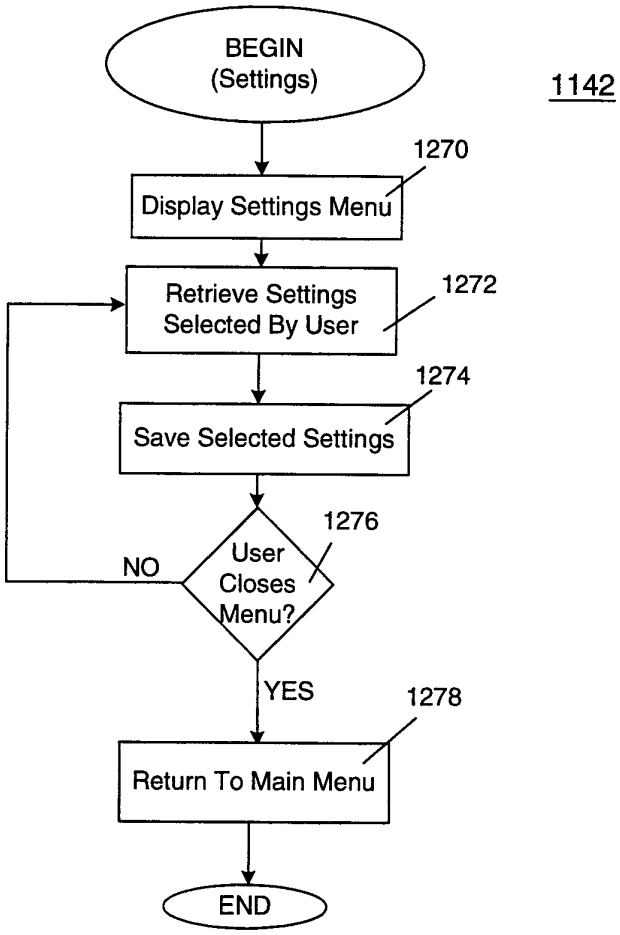
BEGIN
(Settings)
1142
1270
Display Settings Menu
Retrieve Settings
Selected By User
1272
1274
Save Selected Settings
1276
User
Closes
Menu?
NO
YES
1278
Return To Main Menu
END

Fig. 27

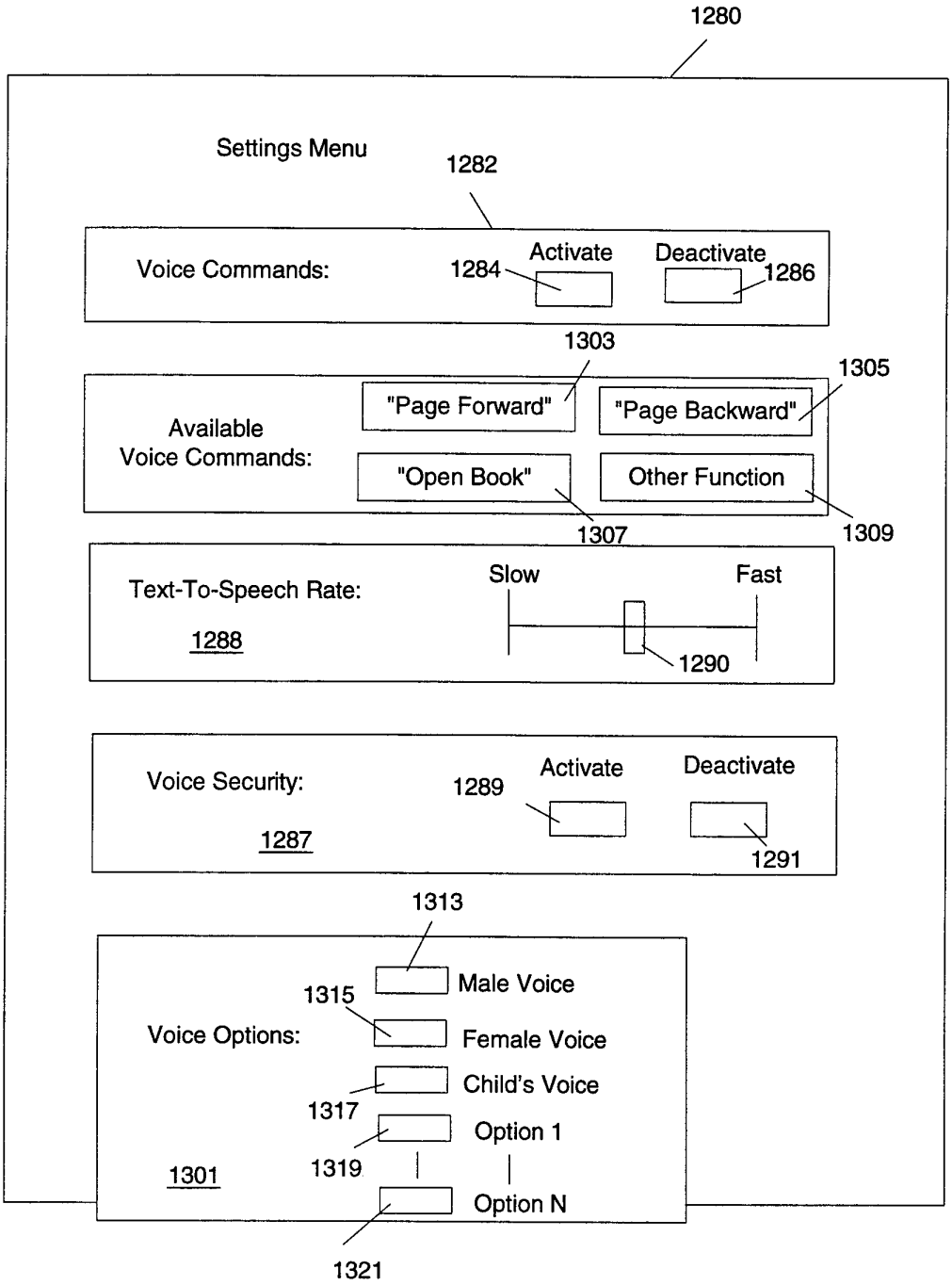
1280
Settings Menu
1282
Voice Commands:
1284
Activate
Deactivate
1286
1303
1305
Available
Voice Commands:
"Page Forward"
"Page Backward"
"Open Book"
Other Function
1307
1309
Text-To-Speech Rate:
1288
Slow
Fast
1290
Voice Security:
1287
1289
Activate
Deactivate
1291
1313
Voice Options:
1315
Male Voice
Female Voice
Child's Voice
1317
Option 1
1319
1301
Option N
1321

Fig. 28

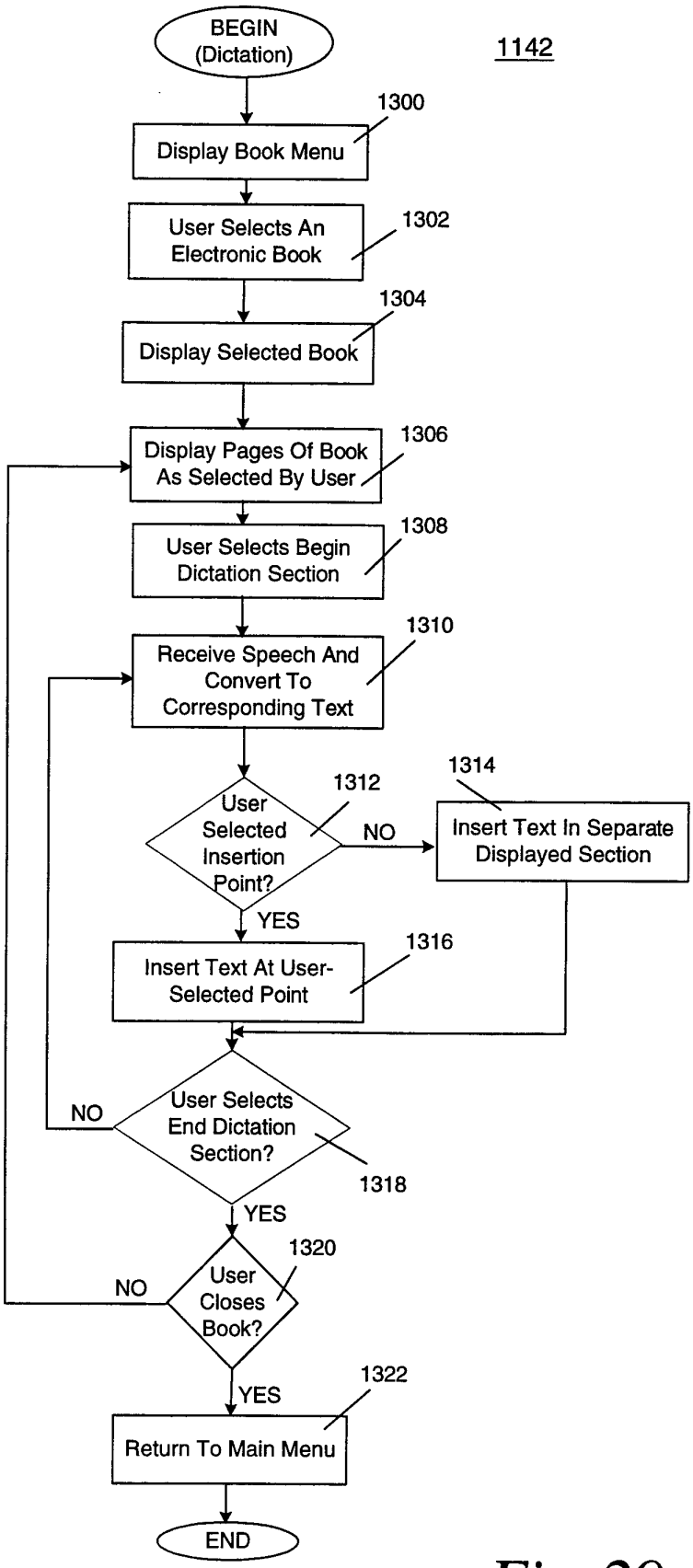
BEGIN
(Dictation)
1142
1300
Display Book Menu
User Selects An
Electronic Book
1302
1304
Display Selected Book
Display Pages Of Book
As Selected By User
1306
User Selects Begin
Dictation Section
1308
1310
Receive Speech And
Convert To
Corresponding Text
1314
1312
User
Selected
Insertion
Point?
NO
Insert Text In Separate
Displayed Section
YES
1316
Insert Text At User-
Selected Point
NO
User Selects
End Dictation
Section?
1318
YES
1320
NO
User
Closes
Book?
1322
YES
Return To Main Menu
END

Fig. 29

Fig. 30a

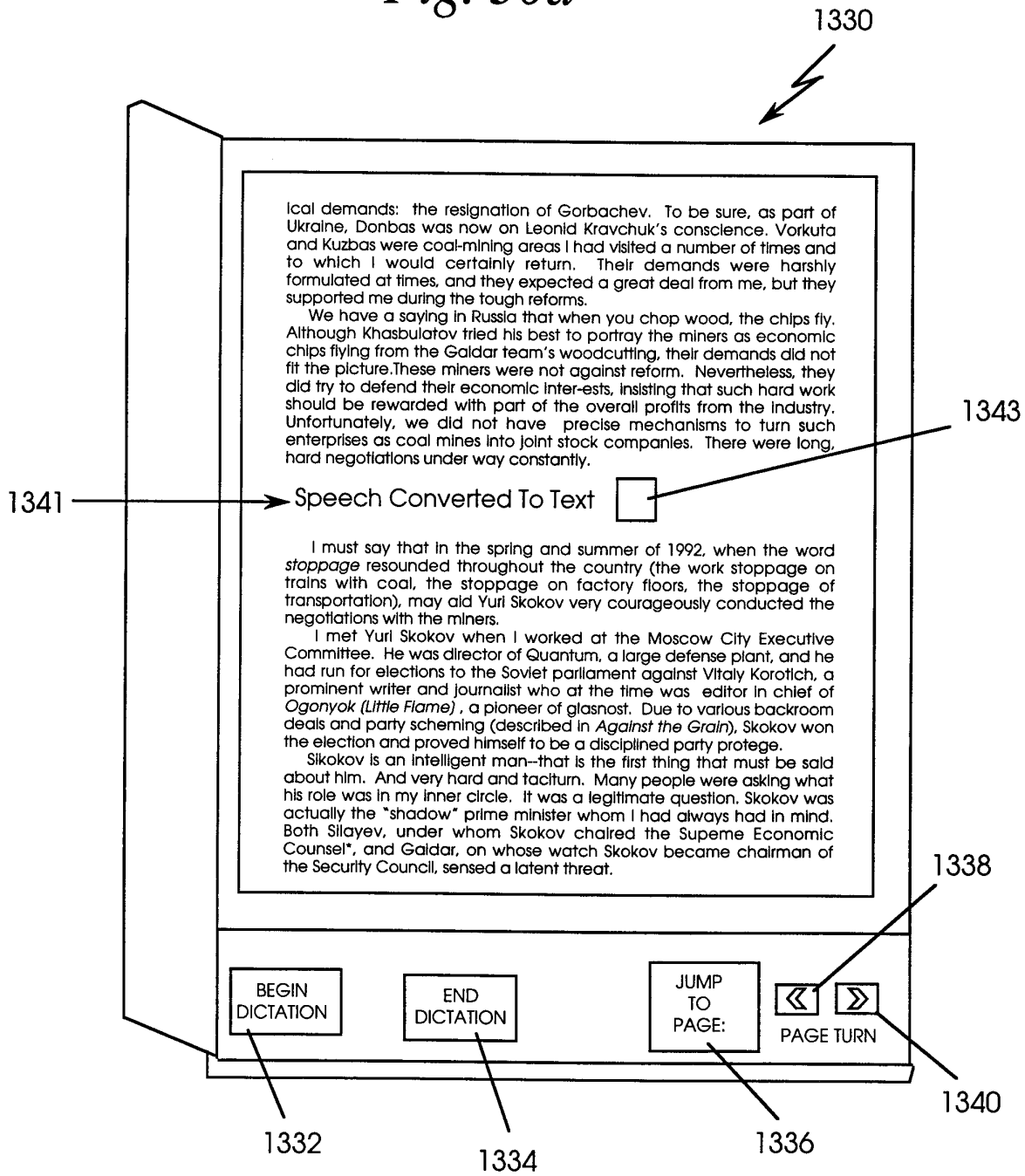
1330
lcal demands: the resignation of Gorbachev. To be sure, as part of Ukraine, Donbas was now on Leonid Kravchuk's conscience. Vorkuta and Kuzbas were coal-mining areas I had visited a number of times and to which I would certainly return. Their demands were harshly formulated at times, and they expected a great deal from me, but they supported me during the tough reforms.
We have a saying in Russia that when you chop wood, the chips fly. Although Khasbulatov tried his best to portray the miners as economic chips flying from the Gaidar team's woodcutting, their demands did not fit the picture.These miners were not against reform. Nevertheless, they did try to defend their economic inter-ests, insisting that such hard work should be rewarded with part of the overall profits from the industry. Unfortunately, we did not have precise mechanisms to turn such enterprises as coal mines into joint stock companies. There were long, hard negotiations under way constantly.
1343
1341
Speech Converted To Text
I must say that in the spring and summer of 1992, when the word *stoppage* resounded throughout the country (the work stoppage on trains with coal, the stoppage on factory floors, the stoppage of transportation), may aid Yuri Skokov very courageously conducted the negotiations with the miners.
I met Yuri Skokov when I worked at the Moscow City Executive Committee. He was director of Quantum, a large defense plant, and he had run for elections to the Soviet parliament against Vitaly Korotich, a prominent writer and journalist who at the time was editor in chief of *Ogonyok (Little Flame)*, a pioneer of glasnost. Due to various backroom deals and party scheming (described in *Against the Grain*), Skokov won the election and proved himself to be a disciplined party protege.
Sikokov is an intelligent man--that is the first thing that must be said about him. And very hard and taciturn. Many people were asking what his role was in my inner circle. It was a legitimate question. Skokov was actually the "shadow" prime minister whom I had always had in mind. Both Silayev, under whom Skokov chaired the Supeme Economic Counsel", and Gaidar, on whose watch Skokov became chairman of the Security Council, sensed a latent threat.
1338
BEGIN DICTATION
END DICTATION
JUMP TO PAGE:
PAGE TURN
1340
1332
1334
1336

Fig. 30b

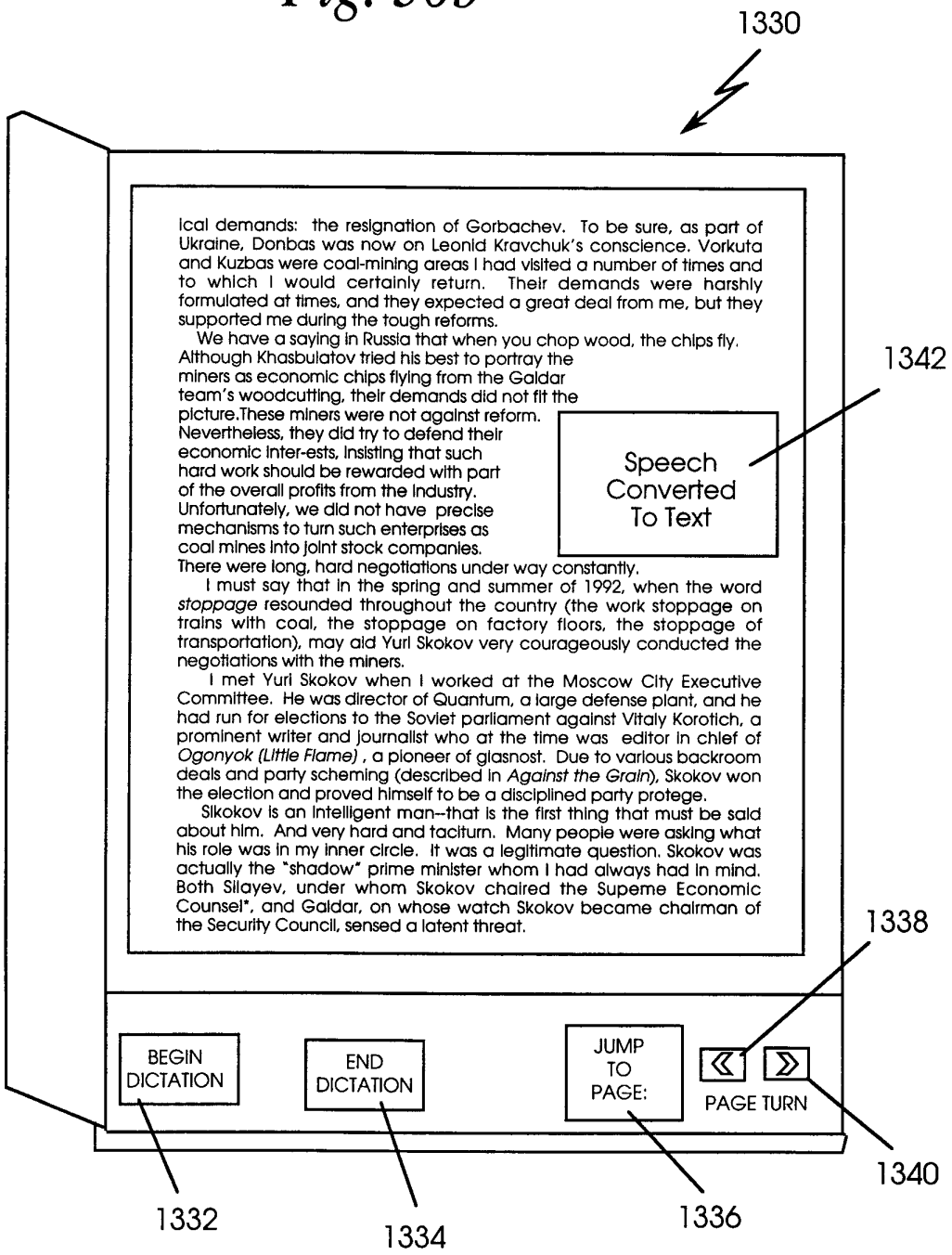
1330
ical demands: the resignation of Gorbachev. To be sure, as part of Ukraine, Donbas was now on Leonid Kravchuk's conscience. Vorkuta and Kuzbas were coal-mining areas I had visited a number of times and to which I would certainly return. Their demands were harshly formulated at times, and they expected a great deal from me, but they supported me during the tough reforms.
We have a saying in Russia that when you chop wood, the chips fly. Although Khasbulatov tried his best to portray the miners as economic chips flying from the Gaidar team's woodcutting, their demands did not fit the picture.These miners were not against reform. Nevertheless, they did try to defend their economic inter-ests, insisting that such hard work should be rewarded with part of the overall profits from the industry. Unfortunately, we did not have precise mechanisms to turn such enterprises as coal mines into joint stock companies. There were long, hard negotiations under way constantly.
I must say that in the spring and summer of 1992, when the word *stoppage* resounded throughout the country (the work stoppage on trains with coal, the stoppage on factory floors, the stoppage of transportation), may aid Yuri Skokov very courageously conducted the negotiations with the miners.
I met Yuri Skokov when I worked at the Moscow City Executive Committee. He was director of Quantum, a large defense plant, and he had run for elections to the Soviet parliament against Vitaly Korotich, a prominent writer and journalist who at the time was editor in chief of *Ogonyok (Little Flame)* , a pioneer of glasnost. Due to various backroom deals and party scheming (described in *Against the Grain*), Skokov won the election and proved himself to be a disciplined party protege.
Sikokov is an intelligent man--that is the first thing that must be said about him. And very hard and taciturn. Many people were asking what his role was in my inner circle. It was a legitimate question. Skokov was actually the "shadow" prime minister whom I had always had in mind. Both Silayev, under whom Skokov chaired the Supeme Economic Counsel*, and Gaidar, on whose watch Skokov became chairman of the Security Council, sensed a latent threat.
1342
Speech Converted To Text
1338
BEGIN DICTATION
END DICTATION
JUMP TO PAGE:
PAGE TURN
1340
1332
1334
1336

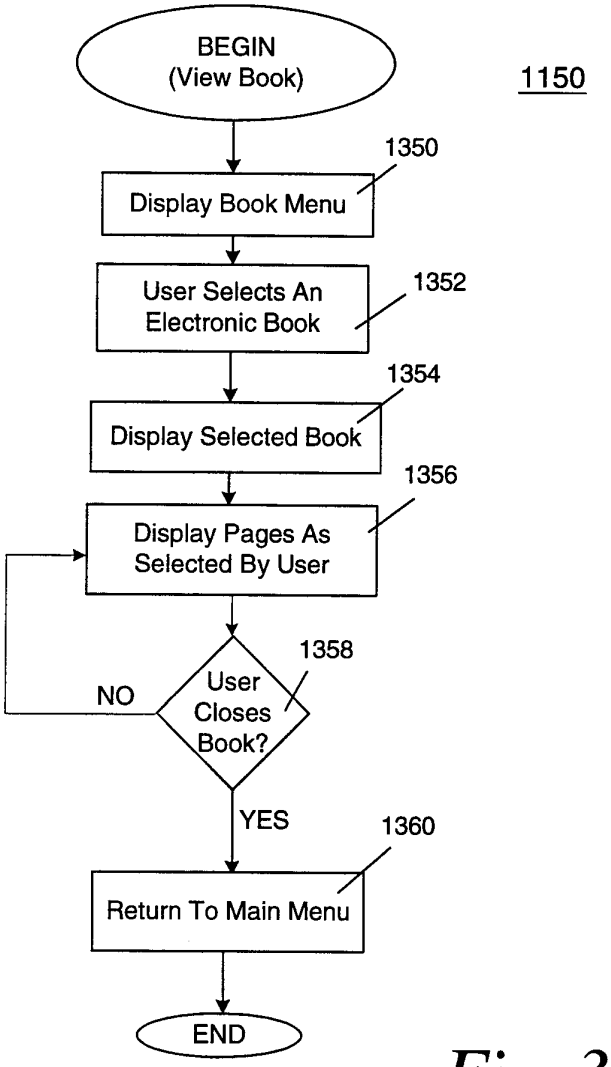
BEGIN
(View Book)
1150
1350
Display Book Menu
User Selects An
Electronic Book
1352
1354
Display Selected Book
1356
Display Pages As
Selected By User
1358
User
Closes
Book?
NO
YES
1360
Return To Main Menu
END

Fig. 31

Fig. 32

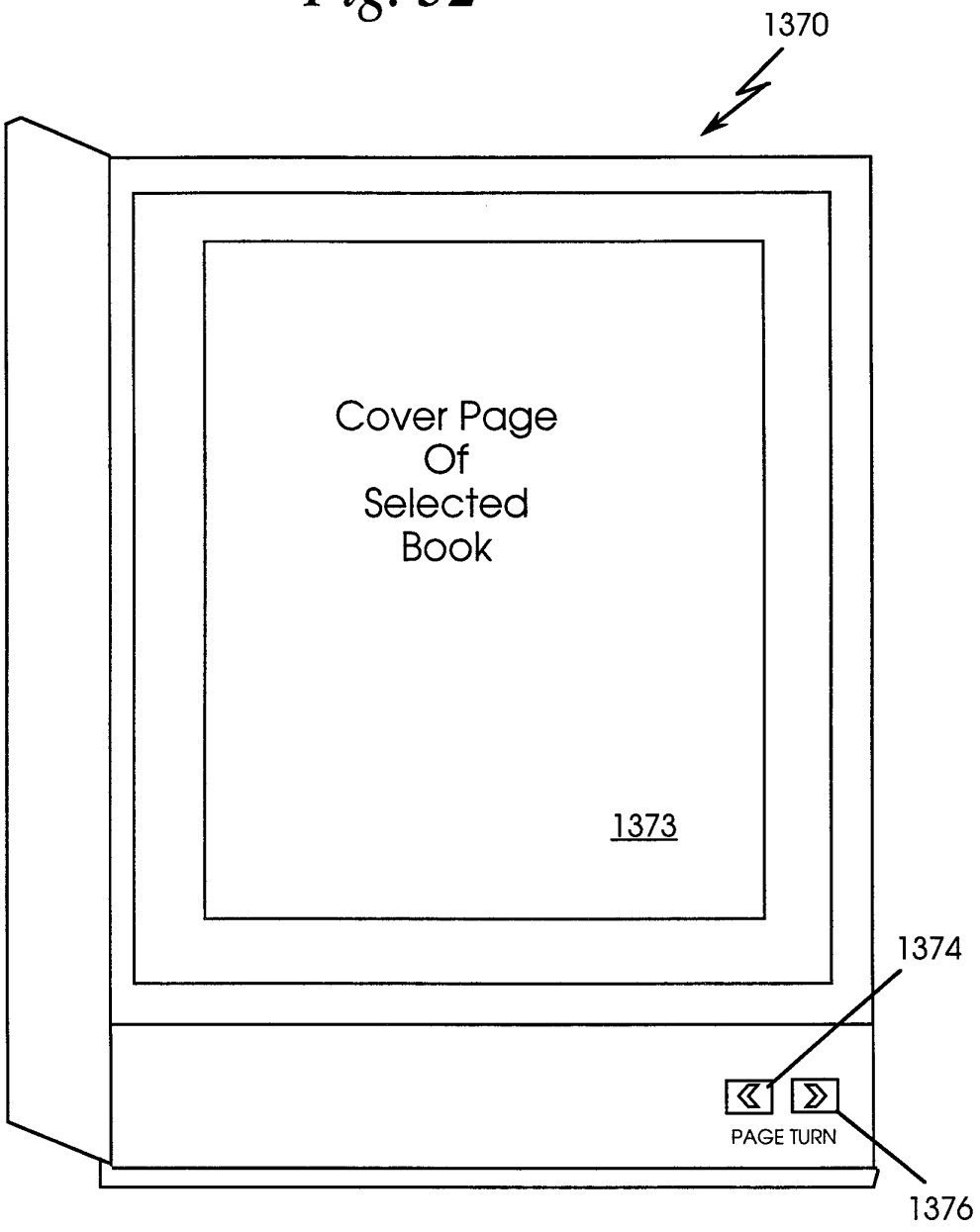

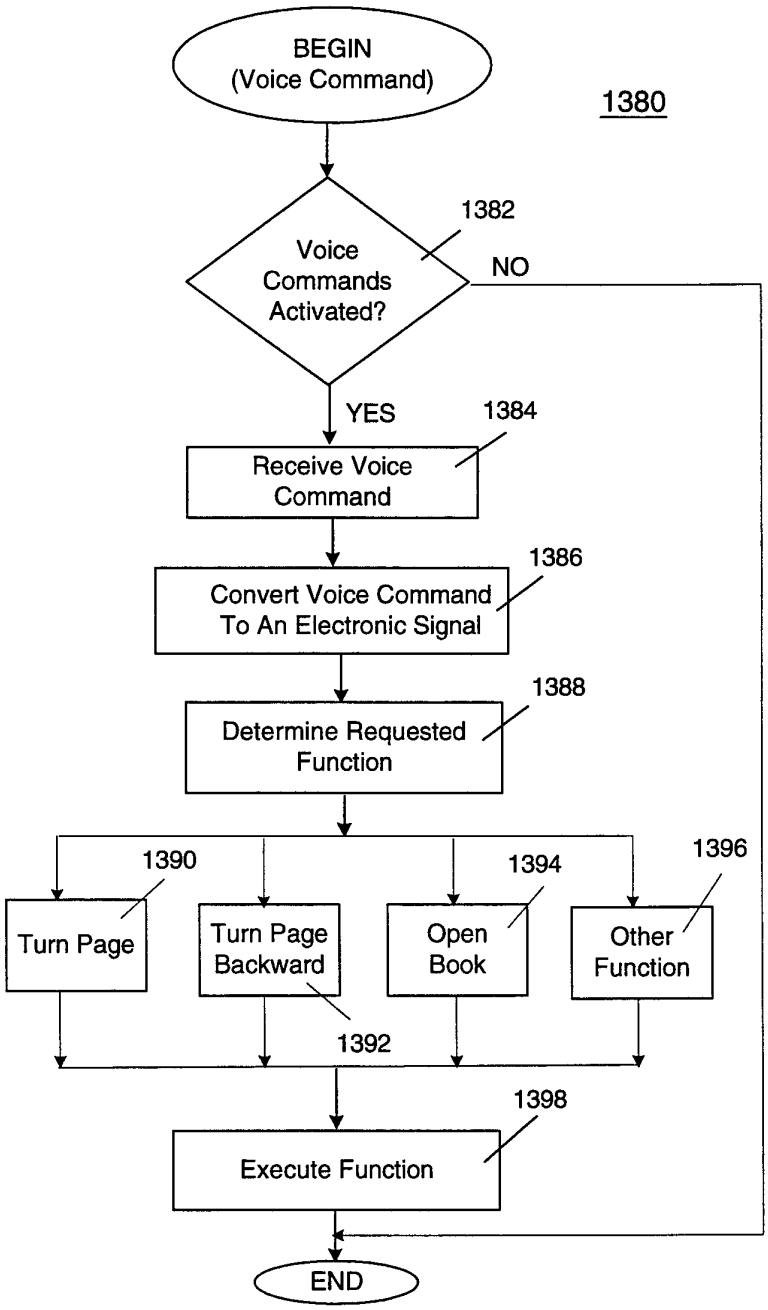
BEGIN
(Voice Command)
1380
1382
Voice
Commands
Activated?
NO
YES
1384
Receive Voice
Command
1386
Convert Voice Command
To An Electronic Signal
1388
Determine Requested
Function
1390
1394
1396
Turn Page
Turn Page
Backward
Open
Book
Other
Function
1392
1398
Execute Function
END

Fig. 33

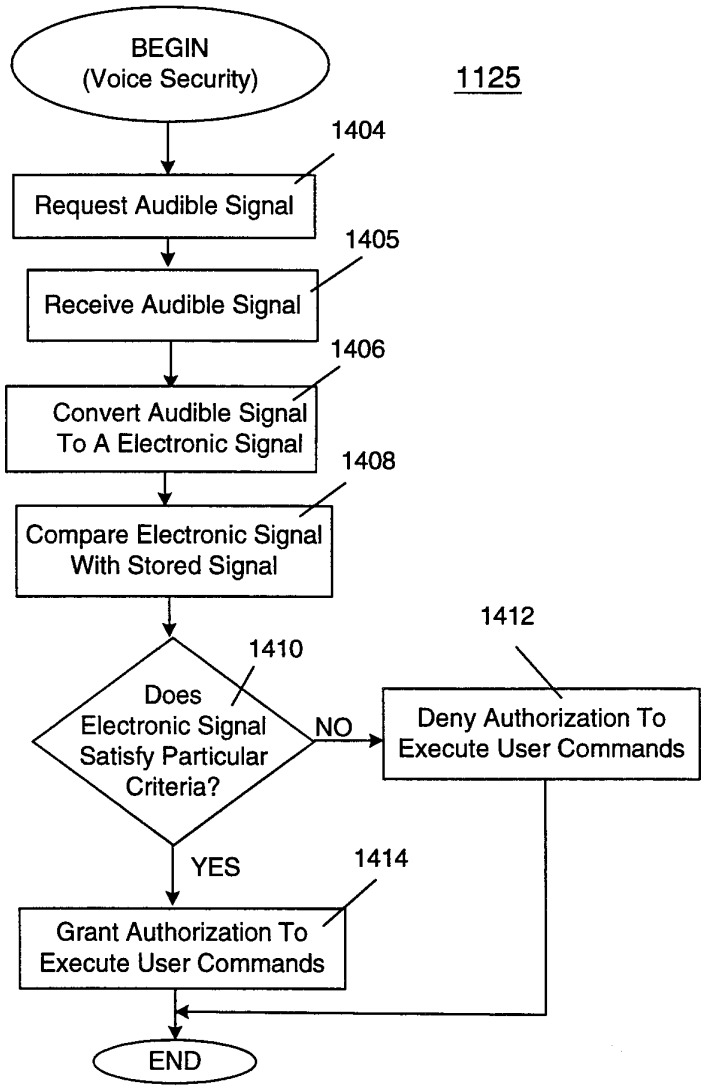
BEGIN
(Voice Security)
1125
1404
Request Audible Signal
1405
Receive Audible Signal
1406
Convert Audible Signal
To A Electronic Signal
1408
Compare Electronic Signal
With Stored Signal
1410
Does
Electronic Signal
Satisfy Particular
Criteria?
NO
1412
Deny Authorization To
Execute User Commands
YES
1414
Grant Authorization To
Execute User Commands
END

Fig. 34