US005930493A

United States Patent [19]

Ottesen et al.

[11] **Patent Number: 5,930,493**

[45] **Date of Patent: Jul. 27, 1999**

[54] **MULTIMEDIA SERVER SYSTEM AND METHOD FOR COMMUNICATING MULTIMEDIA INFORMATION**

[75] Inventors: **Hal Hjalmar Ottesen**; **Gordon J. Smith**; **George Willard VanLeeuwen**, all of Rochester, Minn.

[73] Assignee: **International Business Machines Corporation**, Armonk, N.Y.

[21] Appl. No.: **08/472,506**

[22] Filed: **Jun. 7, 1995**

[51] **Int. Cl.**[6] **G06F 17/00**

[52] **U.S. Cl.** **395/500**; 348/7

[58] **Field of Search** ..... 395/500, 800; 364/514 R; 348/7, 467

[56] **References Cited**

U.S. PATENT DOCUMENTS

4,142,209	2/1979	Hedlund et al.	386/95
4,420,828	12/1983	Yoshida et al.	369/47
4,475,132	10/1984	Rodesch	386/92
4,761,694	8/1988	Shudo et al.	386/95
4,797,752	1/1989	Giddings	386/125
4,916,682	4/1990	Tomoda et al.	369/32
4,949,187	8/1990	Cohen	386/69
4,972,190	11/1990	Primeau et al.	341/155
5,113,439	5/1992	Hashimoto	380/7
5,191,410	3/1993	McCalley et al.	348/13
5,197,051	3/1993	Tomoda et al.	369/14
5,208,665	5/1993	McCalley et al.	348/12

(List continued on next page.)

FOREIGN PATENT DOCUMENTS

0265167 8/1989 European Pat. Off. G11B 27/00

OTHER PUBLICATIONS

Taylor, Herb et al., *The Magic Video–on–Demand Server and Real–Time Simulation System,* IEEE, 1995, pp. 40–51.

Lougher, Phillip et al., *The Impact of Digital Audio and Video on HIgh–Speed Storage,* IEEE, 1994, pp. 84–89.

Sincoskie, W.D., *System architecture for a large scale video on demand service,* Computer Networks and ISDN Systems 22, 1991, 155–162.

IBM Technical Disclosure Bulletin, Multimedia Extensions to Tutorial Manager for Officevision, vol. 33, No. 2, Jul. 1990, p. 440.

IBM Technical Disclosure Bulletin, Interactive Computer/Video Server, vol. 34, No. 3, Aug. 1991, pp. 67–68.

(List continued on next page.)

Primary Examiner—Kevin J. Teska
Assistant Examiner—Vuthe Siek
Attorney, Agent, or Firm—Mark A. Hollingsworth; Merchant, Gould, Smith Edell, Welter & Schmidt; Min S. Xu

[57] **ABSTRACT**

A multimedia server system and a method for communicating multimedia programming to distantly situated media control systems are disclosed. The multimedia server system includes a mass storage library for storing a plurality of multimedia programs. A multimedia program is coded in accordance with a predetermined compression standard and stored in a compressed digital format as sequentially ordered discrete program segments in the mass storage library, with each of program segments being representative of a unique portion of the multimedia program. A video parser organizes the sequentially ordered program segments of a multimedia program into a custom ordered series of program segments preferably including non-sequentially and sequentially ordered program segments in accordance with configuration parameters associated with the configuration and presentation control features of a media control system requesting the multimedia program. Concurrent transmission of a plurality of custom ordered series of program segments to a corresponding plurality of distantly located media control systems is facilitated by an asynchronous transfer mode distribution switch. The custom ordered series of program segments are processed by a local media control system to provide for the sequential presentation of the program segments on a local display and for providing local VCR-type control functions.

20 Claims, 30 Drawing Sheets

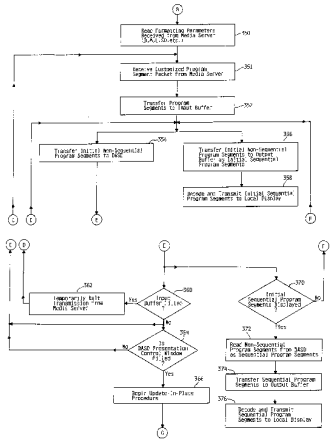

Amazon v. Audio Pod
US Patent 9,954,922
Amazon EX-1039

U.S. PATENT DOCUMENTS

5,257,111	10/1993	Kakuyama	386/125
5,260,800	11/1993	Sturm et al.	386/2
5,291,343	3/1994	Goto	386/96
5,341,474	8/1994	Gelman et al.	395/200.09
5,357,276	10/1994	Banker et al.	348/7
5,369,533	11/1994	Ottesen et al.	360/51
5,410,676	4/1995	Huang et al.	395/500
5,414,455	5/1995	Hooper et al.	348/7
5,434,678	7/1995	Abecassis	386/52
5,442,390	8/1995	Hooper et al.	348/7
5,442,455	8/1995	Hioki et al.	386/37
5,517,250	5/1996	Hoogenboom et al.	348/467
5,517,652	5/1996	Miyamoto et al.	395/800
5,528,281	6/1996	Grady et al.	348/7
5,535,137	7/1996	Rossmere et al.	364/514 A
5,555,441	9/1996	Haddad	455/4.2
5,557,538	9/1996	Retter et al.	364/514 A
5,557,541	9/1996	Schulhof et al.	364/514 R
5,583,561	12/1996	Baker et al.	348/7
5,610,653	3/1997	Abecassis	348/110

OTHER PUBLICATIONS

IBM Technical Disclosure Bulletin, Automatic Multiple Source Selection in a Video Conference, vol. 34, No. 7A, Dec. 1991, pp. 385–386.

IBM Technical Disclosure Bulletin, Multimedia Bitmap Video Imaging in an OS/2 Window, vol. 34, No. 7A, Dec. 1991, pp. 402–403.

IBM Technical Disclosure Bulletin, Multimedia Network System, vol. 35, No. 4B, Sep. 1992, pp. 118–119.

IBM Technical Disclosure Bulletin, Spiral Direct Access Storage Device Format for Non–Stop Multimedia Data Transfers, vol. 37, No. 8, Aug. 1994, pp. 7–8.

Electronic Engineering Times, Rich Boyd–Merritt, Video–on–Demand Battle Brewing, Oct. 4, 1993, pp. 113–114.

Electronic Engineering Times, Rich Boyd–Merritt, Redesigned Disk Drives Go to the Movies, Jan. 17, 1994, pp. 37, 39–40, 53.

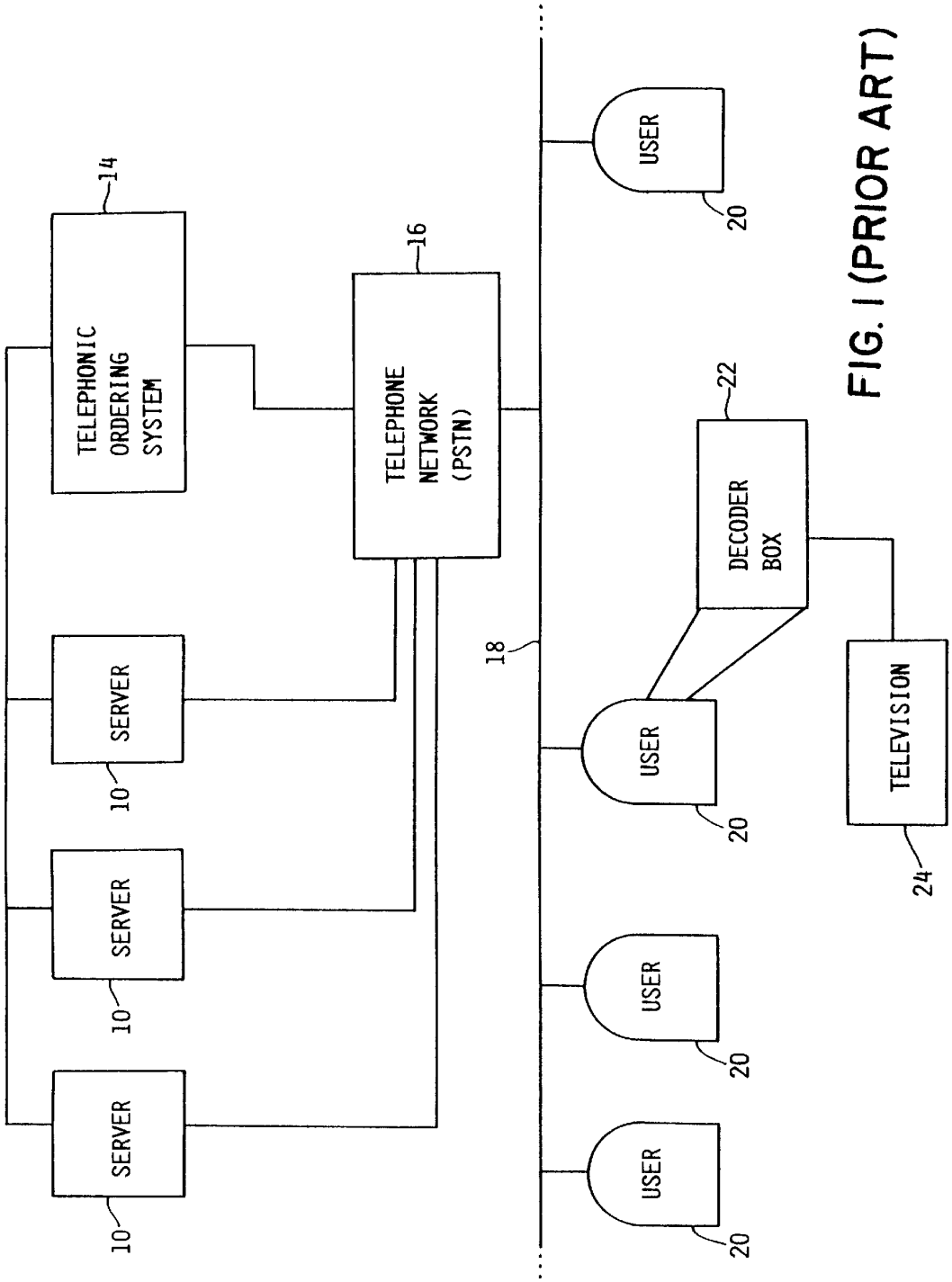

FIG. 1 (PRIOR ART)

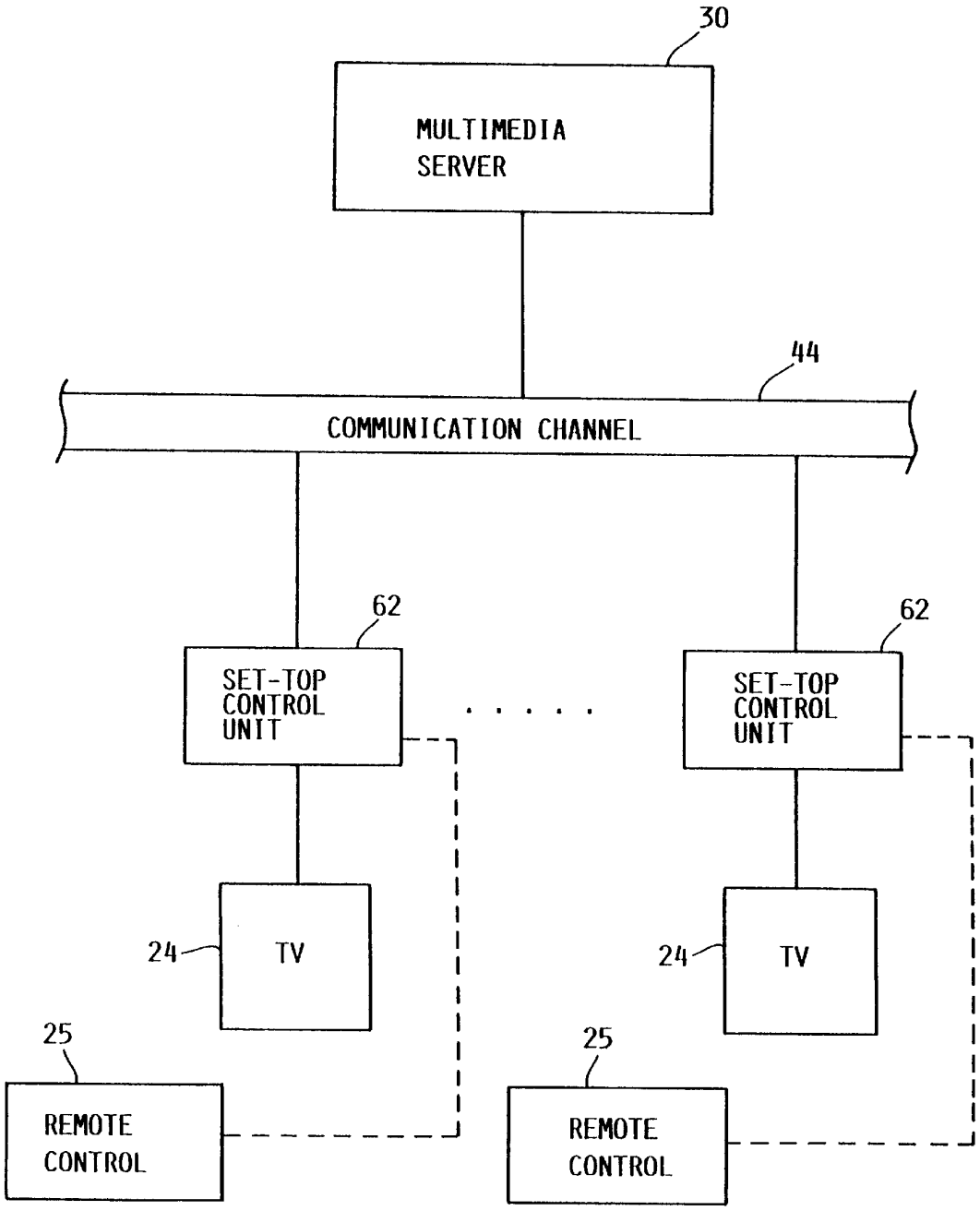
30
MULTIMEDIA SERVER
44
COMMUNICATION CHANNEL
62
SET-TOP CONTROL UNIT
62
SET-TOP CONTROL UNIT
24
TV
24
TV
25
REMOTE CONTROL
25
REMOTE CONTROL

FIG. 2

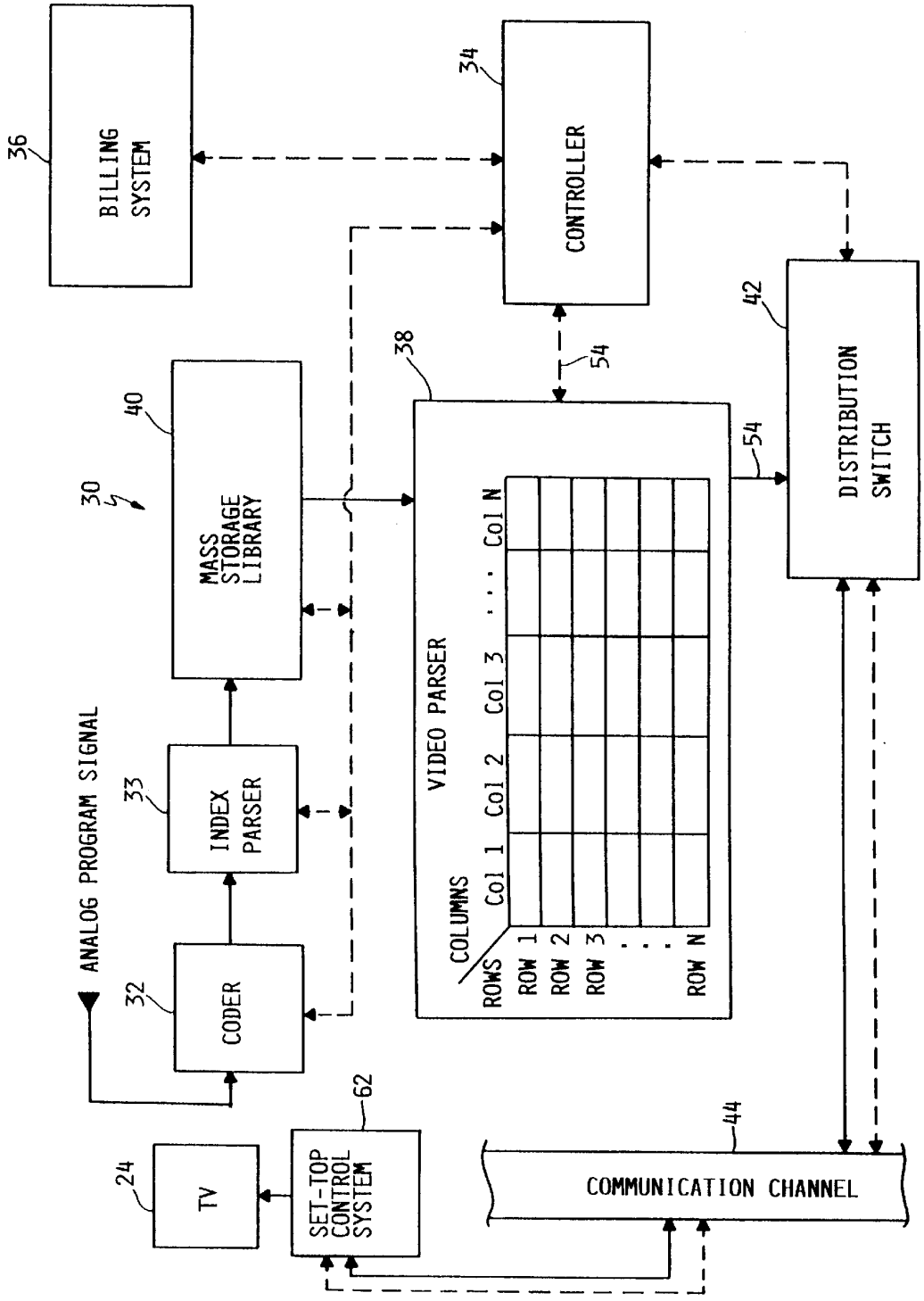
BILLING SYSTEM
36
CONTROLLER
34
MASS STORAGE LIBRARY
40
30
VIDEO PARSER
38
54
DISTRIBUTION SWITCH
42
ANALOG PROGRAM SIGNAL
INDEX PARSER
33
CODER
32
COLUMNS
ROWS
Col 1
Col 2
Col 3
Col N
ROW 1
ROW 2
ROW 3
ROW N
TV
24
SET-TOP CONTROL SYSTEM
62
COMMUNICATION CHANNEL
44

FIG. 3

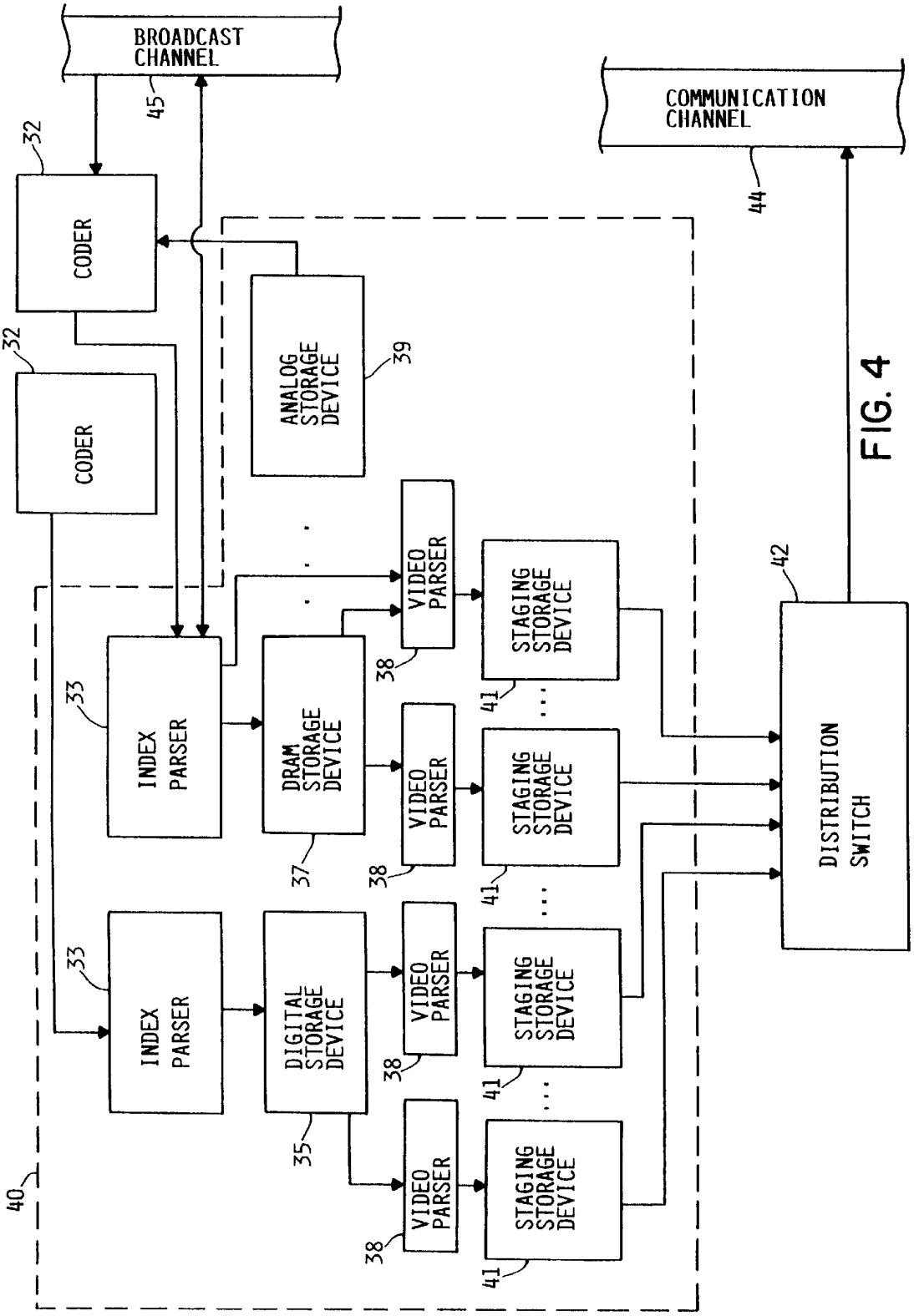
BROADCAST CHANNEL
45
COMMUNICATION CHANNEL
44
32
CODER
32
CODER
ANALOG STORAGE DEVICE
39
33
INDEX PARSER
DRAM STORAGE DEVICE
37
VIDEO PARSER
38
STAGING STORAGE DEVICE
41
42
DISTRIBUTION SWITCH
33
INDEX PARSER
DIGITAL STORAGE DEVICE
35
VIDEO PARSER
38
STAGING STORAGE DEVICE
41
40

FIG. 4

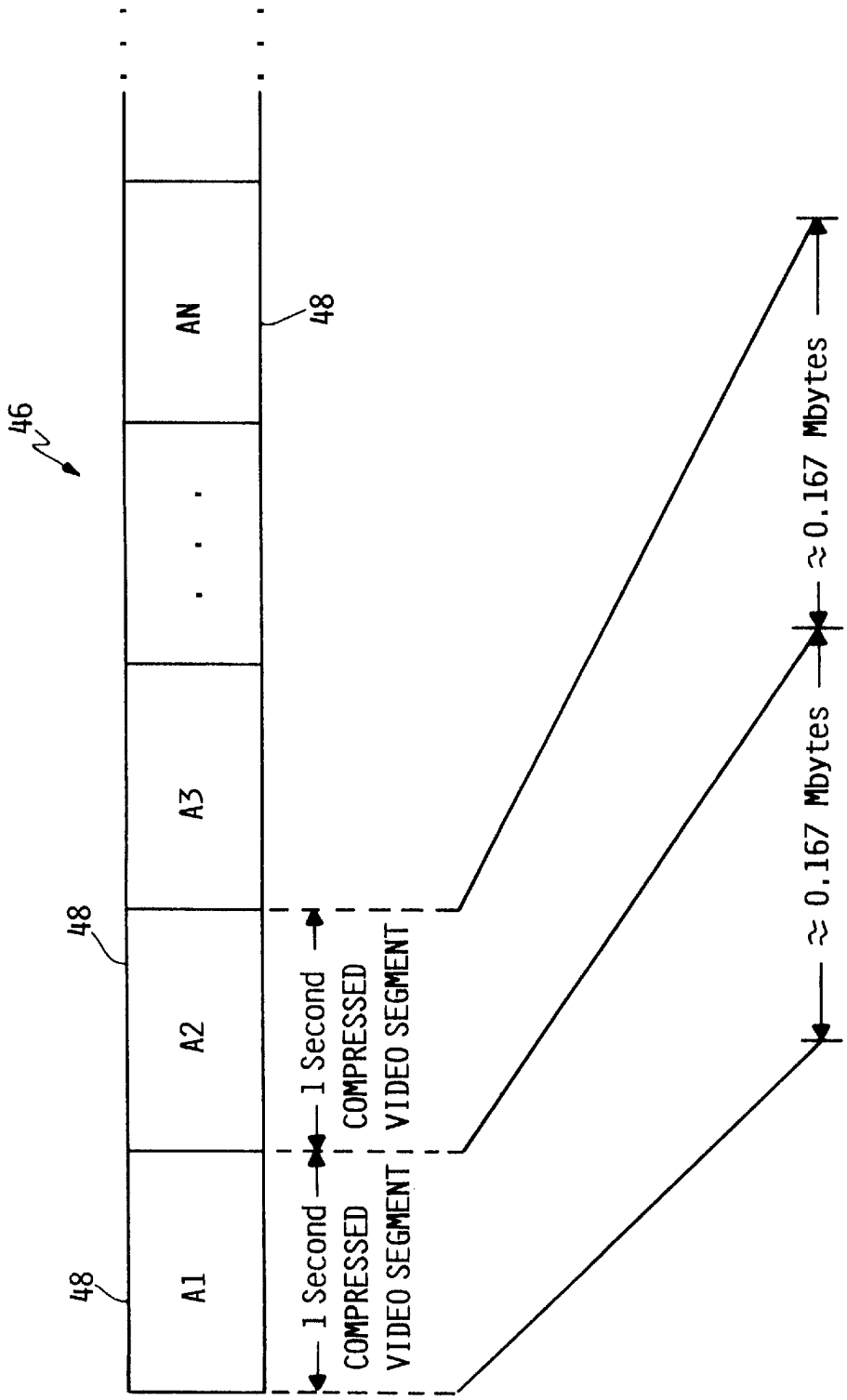
46
48
48
48
A1
A2
A3
AN
1 Second
COMPRESSED
VIDEO SEGMENT
1 Second
COMPRESSED
VIDEO SEGMENT
≈ 0.167 Mbytes
≈ 0.167 Mbytes

FIG. 5

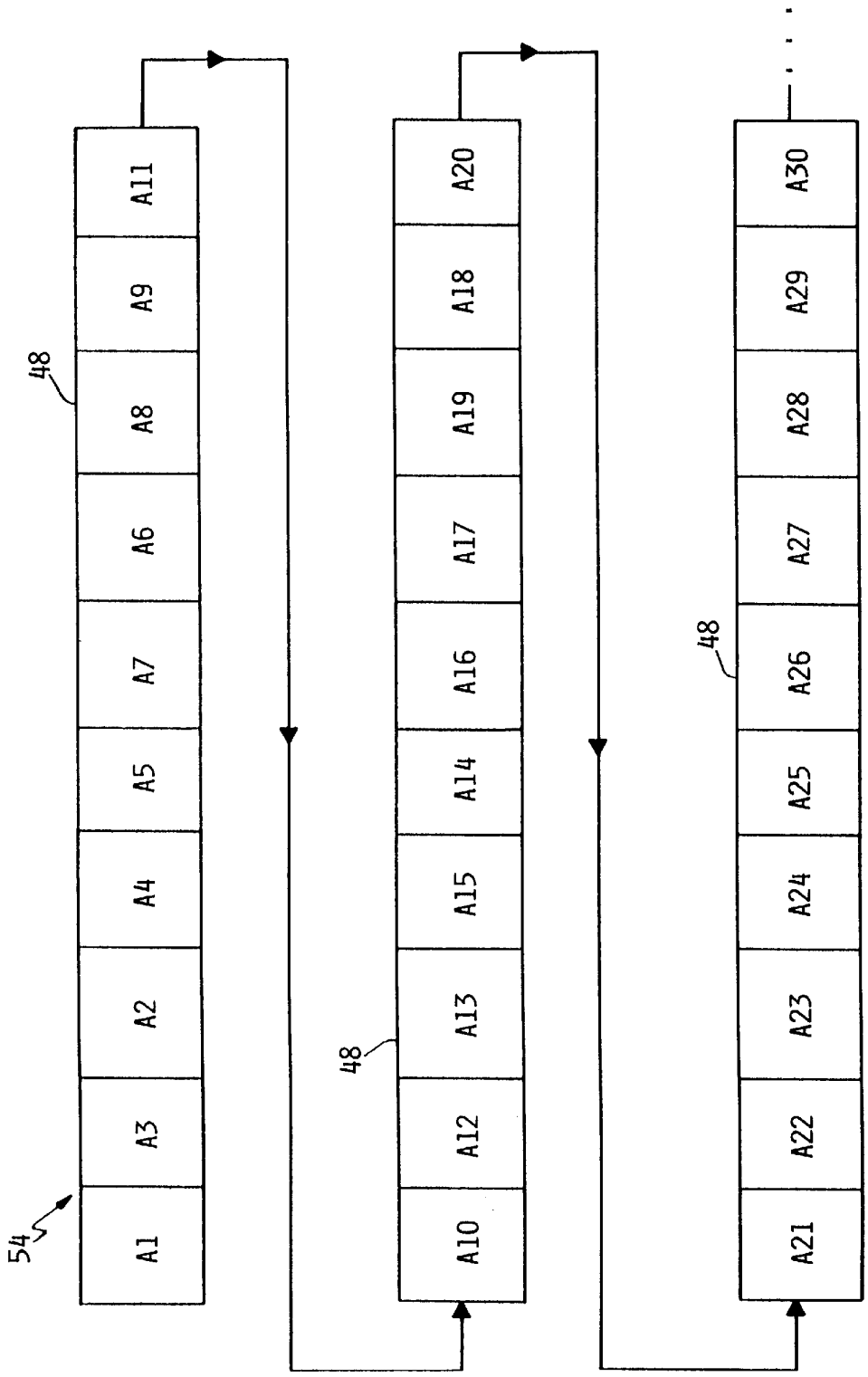
54
48
48
48
A1
A2
A3
A4
A5
A6
A7
A8
A9
A11
A10
A12
A13
A14
A15
A16
A17
A19
A18
A20
A21
A22
A23
A24
A25
A26
A27
A28
A29
A30

FIG. 6

ROWS	COLUMNS										
	C1	C2	C3	C4	C5	C6	C7	C8	C9	C119	C120
R1	A1	A61	A112	A181	A241	A301	A361	A421	...	A7081	A7141
R2	A2	A62	A122	A182	A242	A302	A362	A422	...	A7082	A7142
R3	A3	A63	A123	A183	A243	A303	A363	A423	...	A7083	A7143
R4	A4	A64	A124	A184	A244	A304	A364	A424	...	A7084	A7144
R5	A5	A65	A125	A185	A245	A305	A365	A425	...	A7085	A7145
R6	A6	A66	A126	A186	A246	A306	A366	A426	...	A7086	A7146
R7	A7	A67	A127	A187	A247	A307	A367	A427	...	A7087	A7147
R8	A8	A68	A128	A188	A248	A308	A368	A428	...	A7088	A7148
R9	A9	A69	A129	A189	A249	A309	A369	A429	...	A7089	A7149
R10	A10	A70	A130	A190	A250	A310	A370	A430	...	A7090	A7150
...	...	...	...	...	...	...	...	...	...	...	...
...	...	...	...	...	...	...	...	...	...	...	...
...	...	...	...	...	...	...	...	...	...	...	...
R59	A59	A119	A179	A239	A299	A359	A419	A479	...	A7139	A7199
R60	A60	A120	A180	A240	A300	A360	A420	A480	...	A7140	A7200

FIG. 7

51

ROWS	COLUMNS						
	C1	C2	C3	C4	C5	....	C360
R1	A1	A21	A41	A61	A81	.....	A7181
R2	A3	A23	A43	A63	A83	.....	
R3	A5	A25	A45	A65	A85	.....	
R4	A7	A27	A47	A67	A87	.....	
R5	A9	A29	A49	A69	A89	.....	BLOCK-A
R6	A11	A31	A51	A71	A91	.....	
R7	A13	A33	A53	A73	A93	.....	
R8	A15	A35	A55	A75	A95	.....	
R9	A17	A37	A57	A77	A97	.....	
R10	A19	A39	A59	A79	A99	.....	A7199
R11	A2	A22	A42	A62	A82	.....	A7182
R12	A4	A24	A44	A64	A84	.....	
R13	A6	A26	A46	A66	A86	.....	
R14	A8	A28	A48	A68	A88	.....	
R15	A10	A30	A50	A70	A90	.....	BLOCK-B
R16	A12	A32	A52	A72	A92	.....	
R17	A14	A34	A54	A74	A94	.....	
R18	A16	A36	A56	A76	A96	.....	
R19	A18	A38	A58	A78	A98	.....	
R20	A20	A40	A60	A80	A100	.....	A7200

50

52

FIG. 8

51

ROWS	COLUMNS				
	C1	C2	C3	.....	C180
R1	A1	A21	A41	.....	
R2	A5	A25	A45	.....	BLOCK-A
R3	A9	A29	A49	.....	
R4	A13	A33	A53	.....	
R5	A17	A37	A57	.....	A3597
R6	A2	A22	A42	.....	
R7	A6	A26	A46	.....	BLOCK-B
R8	A10	A30	A50	.....	
R9	A14	A34	A54	.....	
R10	A18	A38	A58	.....	A3598
R11	A3	A23	A43	.....	
R12	A7	A27	A47	.....	BLOCK-C
R13	A11	A31	A51	.....	
R14	A15	A35	A55	.....	
R15	A19	A39	A59	.....	A3599
R16	A4	A24	A44	.....	
R17	A8	A28	A48	.....	BLOCK-D
R18	A12	A32	A52	.....	
R19	A16	A36	A56	.....	
R20	A20	A40	A60	.....	A3600

53 55 57 59

FIG. 9

PACKET #	RUN	SEGMENTS				
1	Run 1	A1	A5	A2	A6	A3
2	Run 1.5	A7	A4	A8	A9	A13
3	Run 2	A10	A14	A11	A15	A12
4	Run 3	A17	A18	A19	A16	A20
5	Run 4	A21	A22	A23	A24	
6	Run 5	A25	A26	A27	A28	
7	Run 6	A29	A30	A31	A32	
8	Run 7	A33	A34	A35	A36	
9	Run 8	A37	A38	A39	A40	
10	Run 9	A41	A42	A43	A44	
11	Run 10	A45	A46	A47	A48	
12	Run 11	A49	A50	A51	A52	

FIG. 10

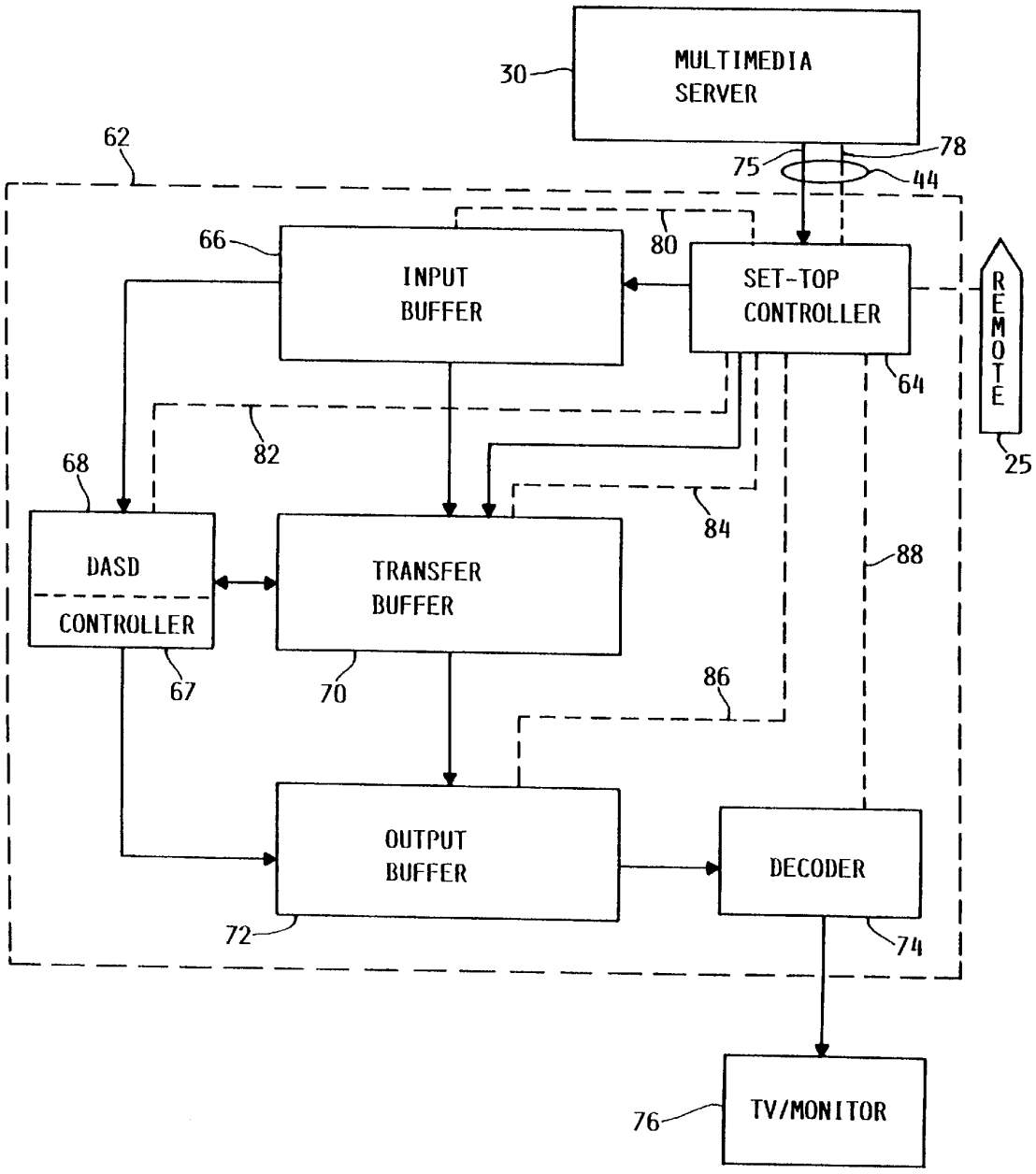
MULTIMEDIA SERVER
30
62
75
78
44
66
80
INPUT BUFFER
SET-TOP CONTROLLER
REMOTE
64
25
82
68
84
88
DASD
CONTROLLER
TRANSFER BUFFER
67
70
86
OUTPUT BUFFER
DECODER
72
74
76
TV/MONITOR

FIG. 11

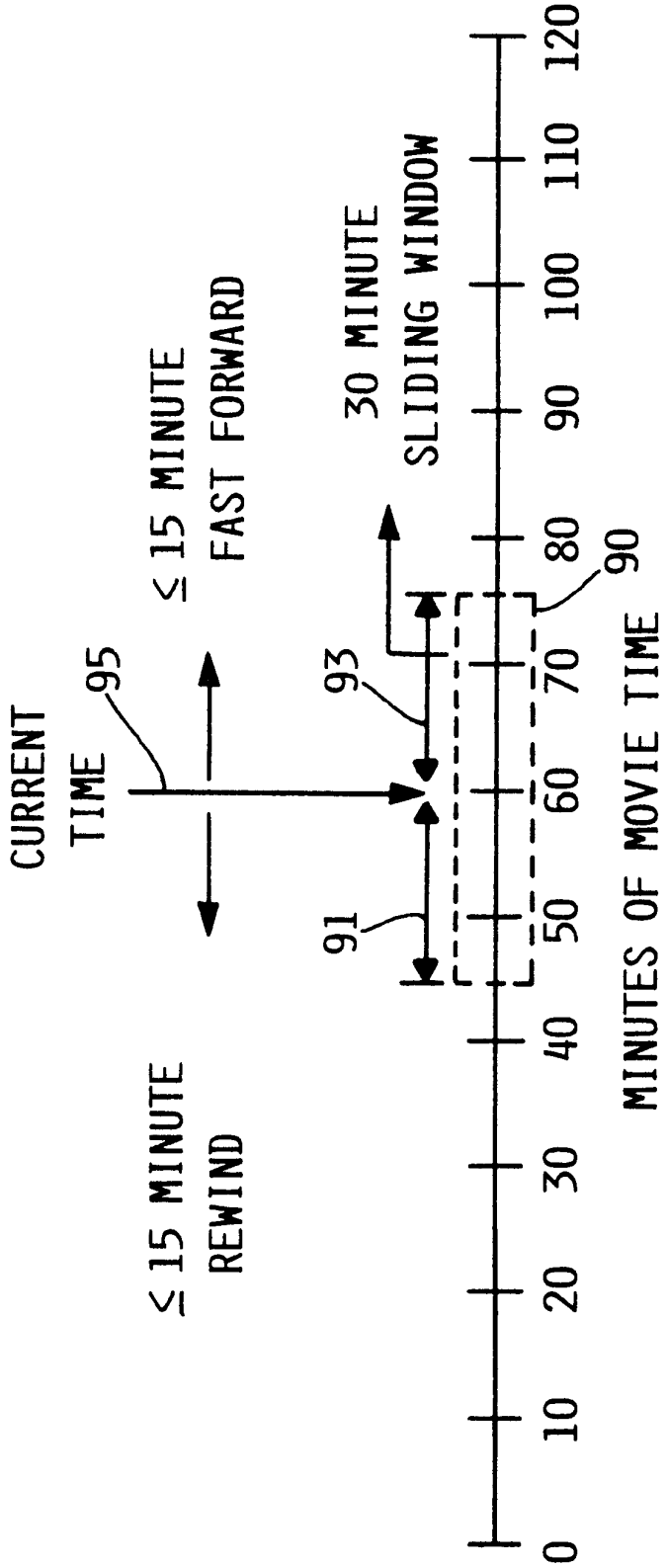
CURRENT TIME
95
≤ 15 MINUTE REWIND
≤ 15 MINUTE FAST FORWARD
91
93
30 MINUTE SLIDING WINDOW
90
0
10
20
30
40
50
60
70
80
90
100
110
120
MINUTES OF MOVIE TIME

FIG. 12

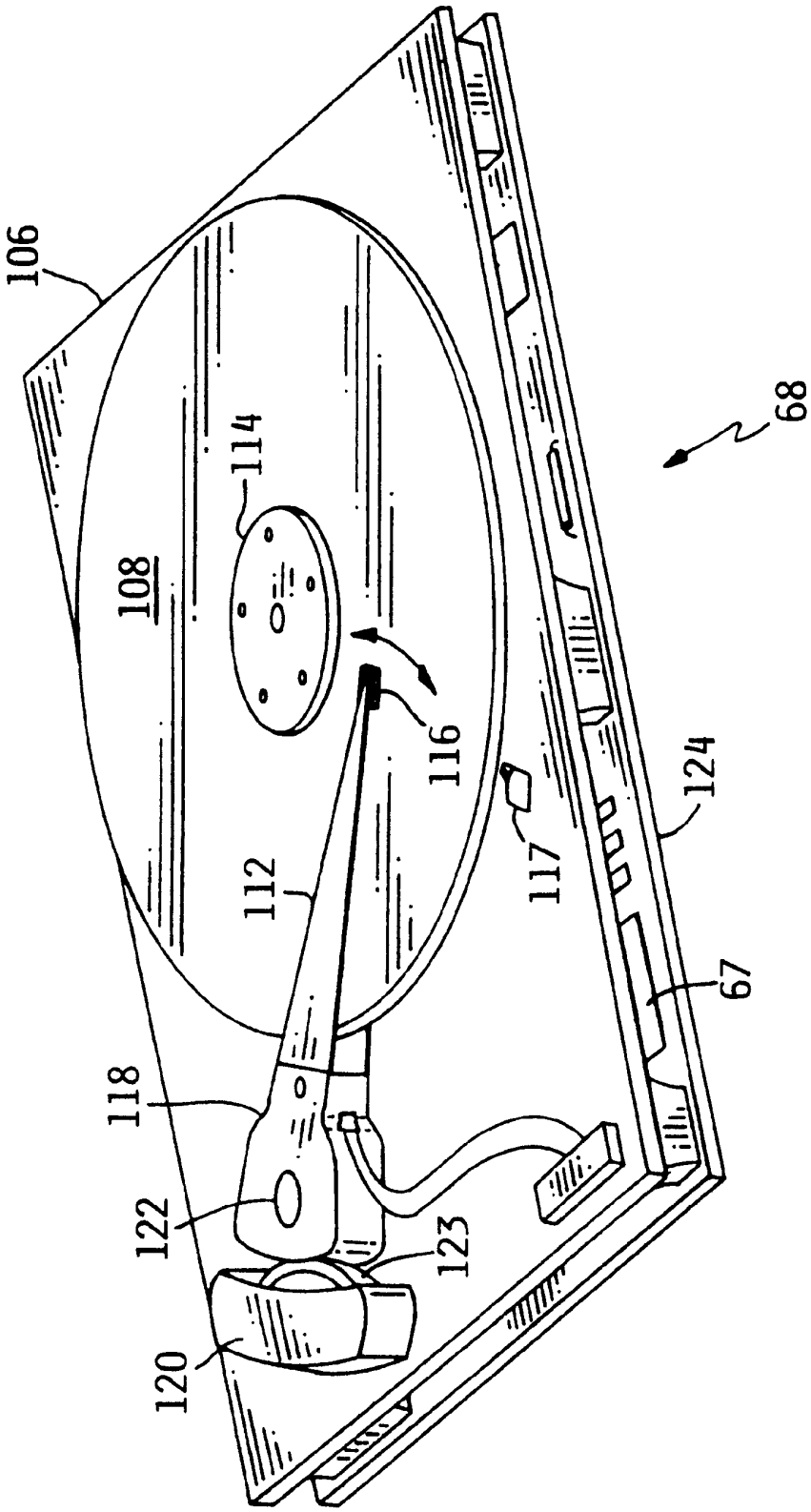

FIG. 13

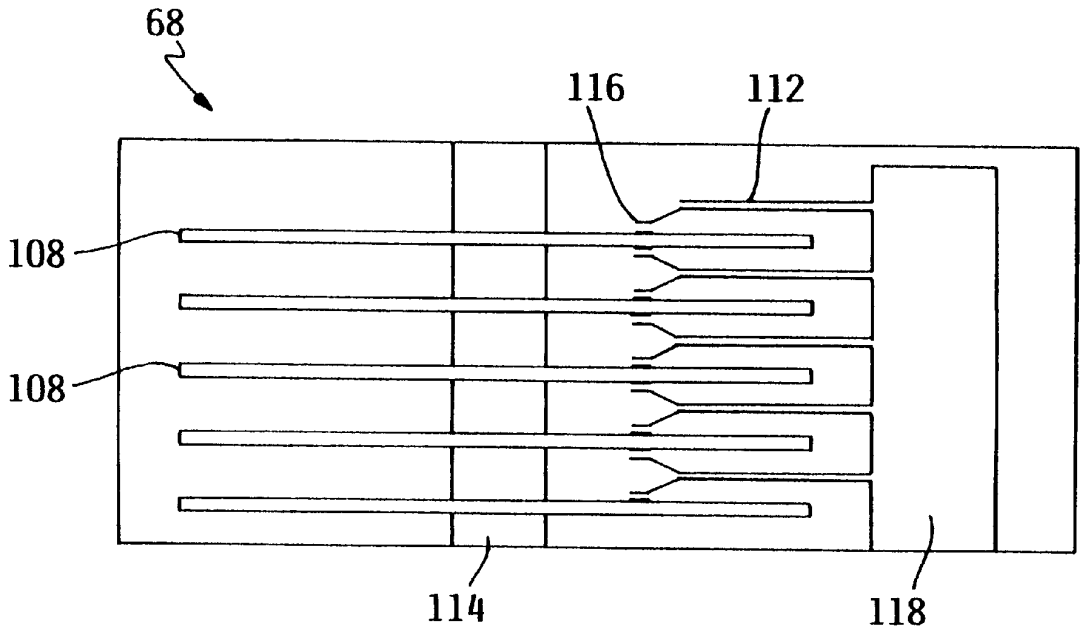

FIG. 14

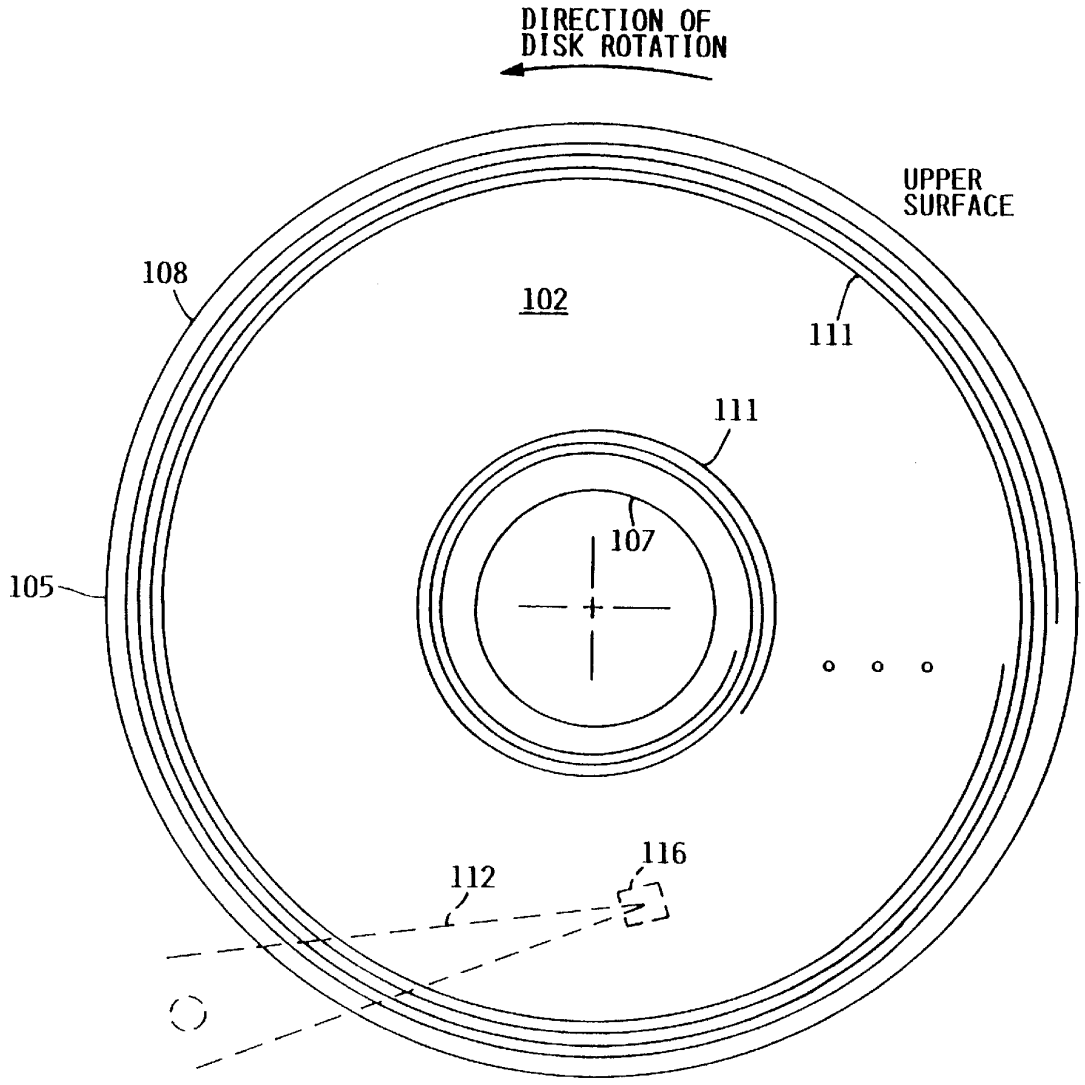
DIRECTION OF
DISK ROTATION
UPPER
SURFACE
108
102
111
111
107
105
116
112

FIG. 15

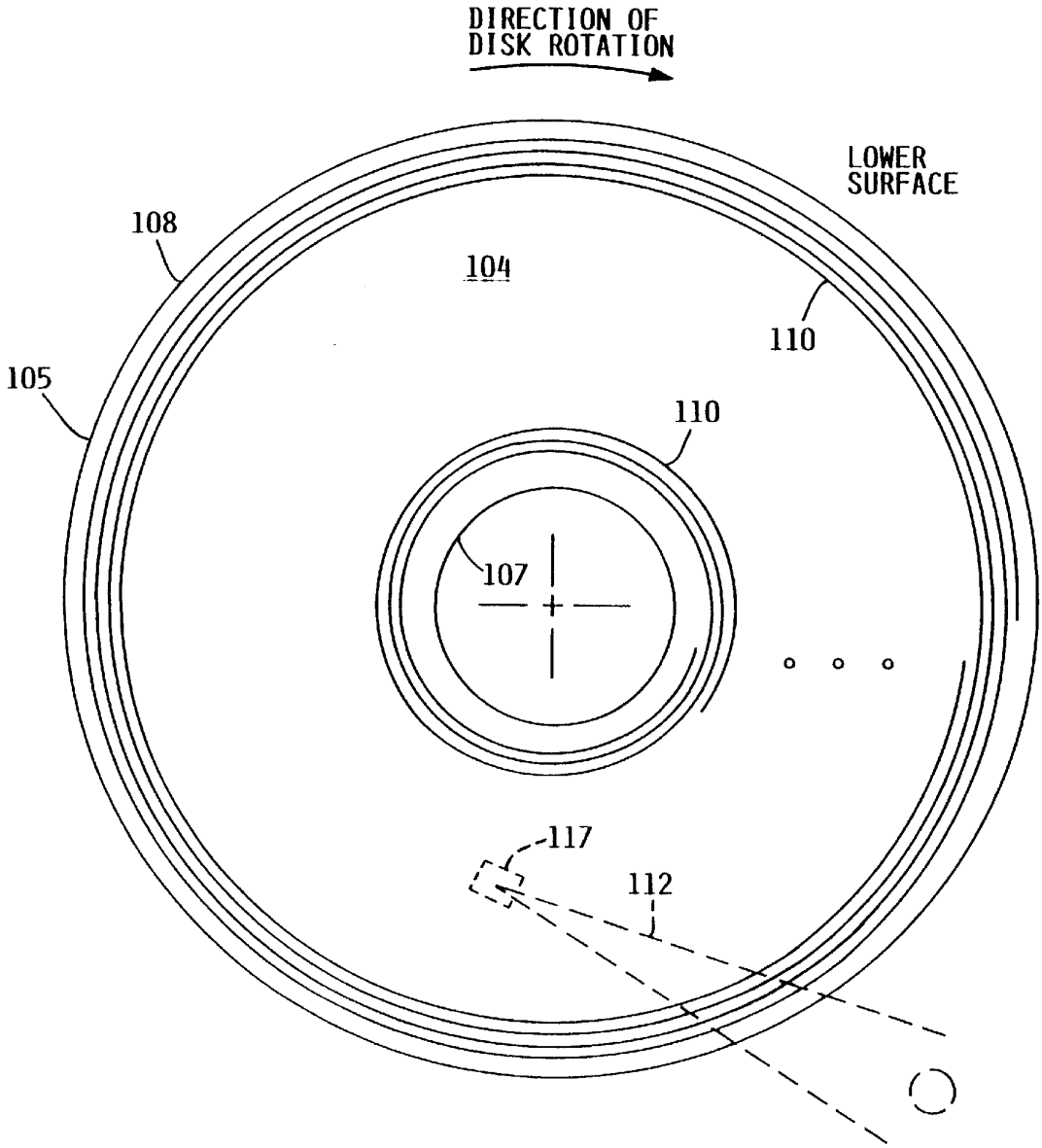
DIRECTION OF
DISK ROTATION
LOWER
SURFACE
108
104
110
105
110
107
117
112

FIG. 16

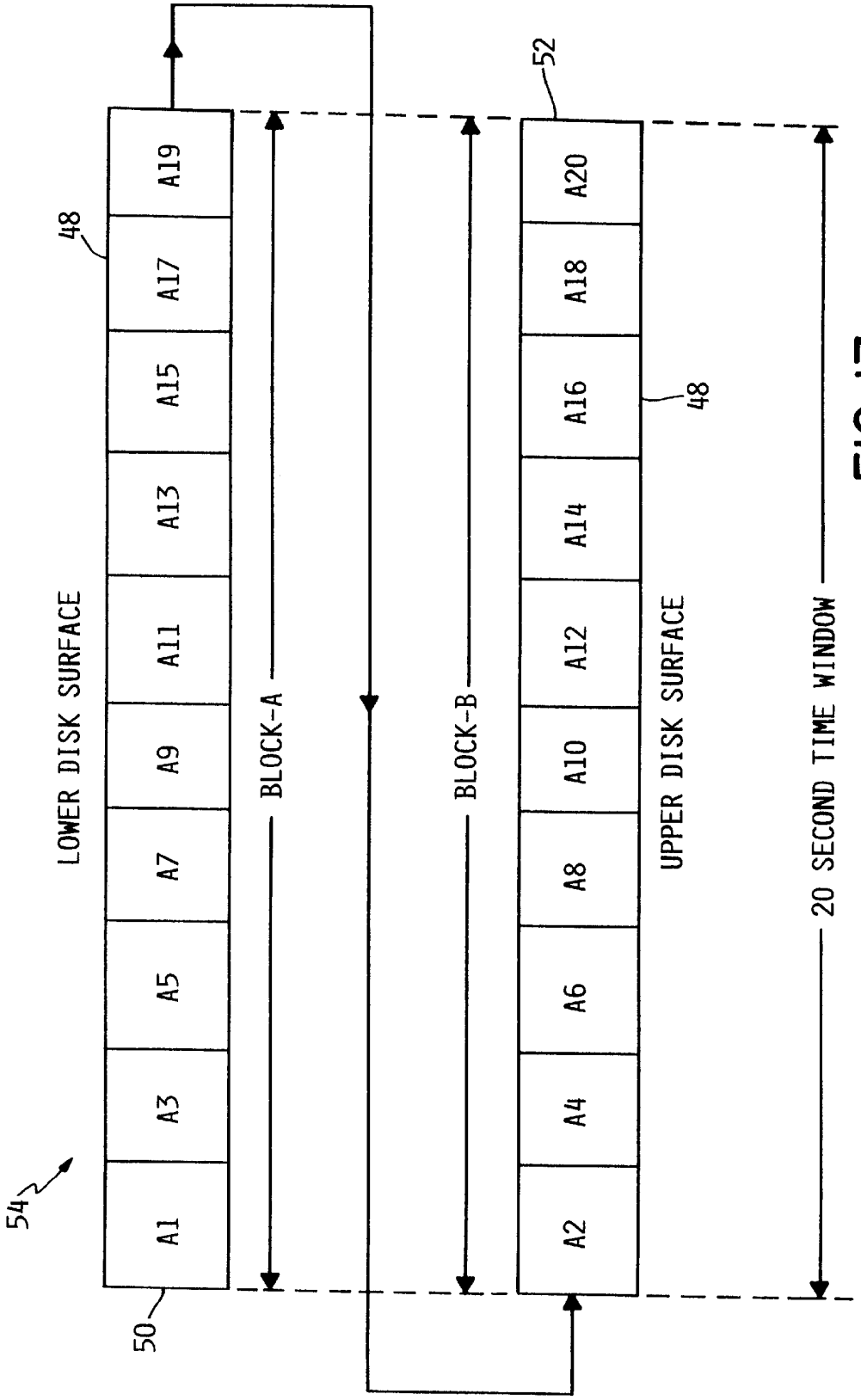
LOWER DISK SURFACE
UPPER DISK SURFACE
A1
A3
A5
A7
A9
A11
A13
A15
A17
A19
A2
A4
A6
A8
A10
A12
A14
A16
A18
A20
BLOCK-A
BLOCK-B
20 SECOND TIME WINDOW
48
48
50
52
54

FIG. 17

INBOUND SPIRAL: LOWER DISK SURFACE												
	RUN 1	RUN 2	RUN 3	RUN 4	RUN 5	RUN 6	RUN 7	RUN 8	RUN 9	RUN 10	RUN 11	RUN N
LOC-1	WR A1	S A1	S A1	S A1	S A1	W A21	S A21	S A21	S A21	S A21	S A21	. . .
LOC-2	W A3	R A3	S A3	S A3	S A3	S A3	W A23	S A23	S A23	S A23	S A23	. . .
LOC-3	--	W A5	R A5	S A5	S A5	S A5	S A5	W A25	S A25	S A25	S A25	. . .
LOC-4	--	W A7	S A7	R A7	S A7	S A7	S A7	S A7	W A27	S A27	S A27	. . .
LOC-5	--	--	W A9	S A9	R A9	S A9	S A9	S A9	S A9	W A29	S A29	. . .
LOC-6	--	--	W A11	S A11	S A11	R A11	S A11	S A11	S A11	S A11	W A31	. . .
LOC-7	--	--	--	W A13	S A13	S A13	R A13	S A13	S A13	S A13	S A13	. . .
LOC-8	--	--	--	W A15	S A15	S A15	S A15	R A15	S A15	S A15	S A15	. . .
LOC-9	--	--	--	--	W A17	S A17	S A17	S A17	R A17	S A17	S A17	. . .
LOC-10	--	--	--	--	W A19	S A19	S A19	S A19	S A19	R A19	S A19	. . .

A B

FIG. 18A

A B

OUTBOUND SPIRAL: UPPER DISK SURFACE

LOC-11	WR A2	S A2	S A2	S A2	S A2	W A22	S A22	S A22	S A22	S A22	S A22	. . .
LOC-12	W A4	R A4	S A4	S A4	S A4	S A24	W A24	S A24	S A24	S A24	S A24	. . .
LOC-13	--	W A6	R A6	S A6	S A6	S A6	S A6	W A26	S A26	S A26	S A26	. . .
LOC-14	--	W A8	S A8	R A8	S A8	S A8	S A8	S A8	W A28	S A28	S A28	. . .
LOC-15	--	--	W A10	S A10	R A10	S A10	S A10	S A10	S A10	W A30	S A30	. . .
LOC-16	--	--	W A12	S A12	S A12	R A12	S A12	S A12	S A12	S A12	W A32	. . .
LOC-17	--	--	--	W A14	S A14	S A14	R A14	S A14	S A14	S A14	S A14	. . .
LOC-18	--	--	--	W A16	S A16	S A16	S A16	R A16	S A16	S A16	S A16	. . .
LOC-19	--	--	--	--	W A18	S A18	S A18	S A18	R A18	S A18	S A18	. . .
LOC-20	--	--	--	--	W A20	S A20	S A20	S A20	S A20	R A20	S A20	. . .

SYMBOLS: W = Write Operation (Update-in-place)
R = Read Operation (Movie Time)
S = Skip

FIG. 18B

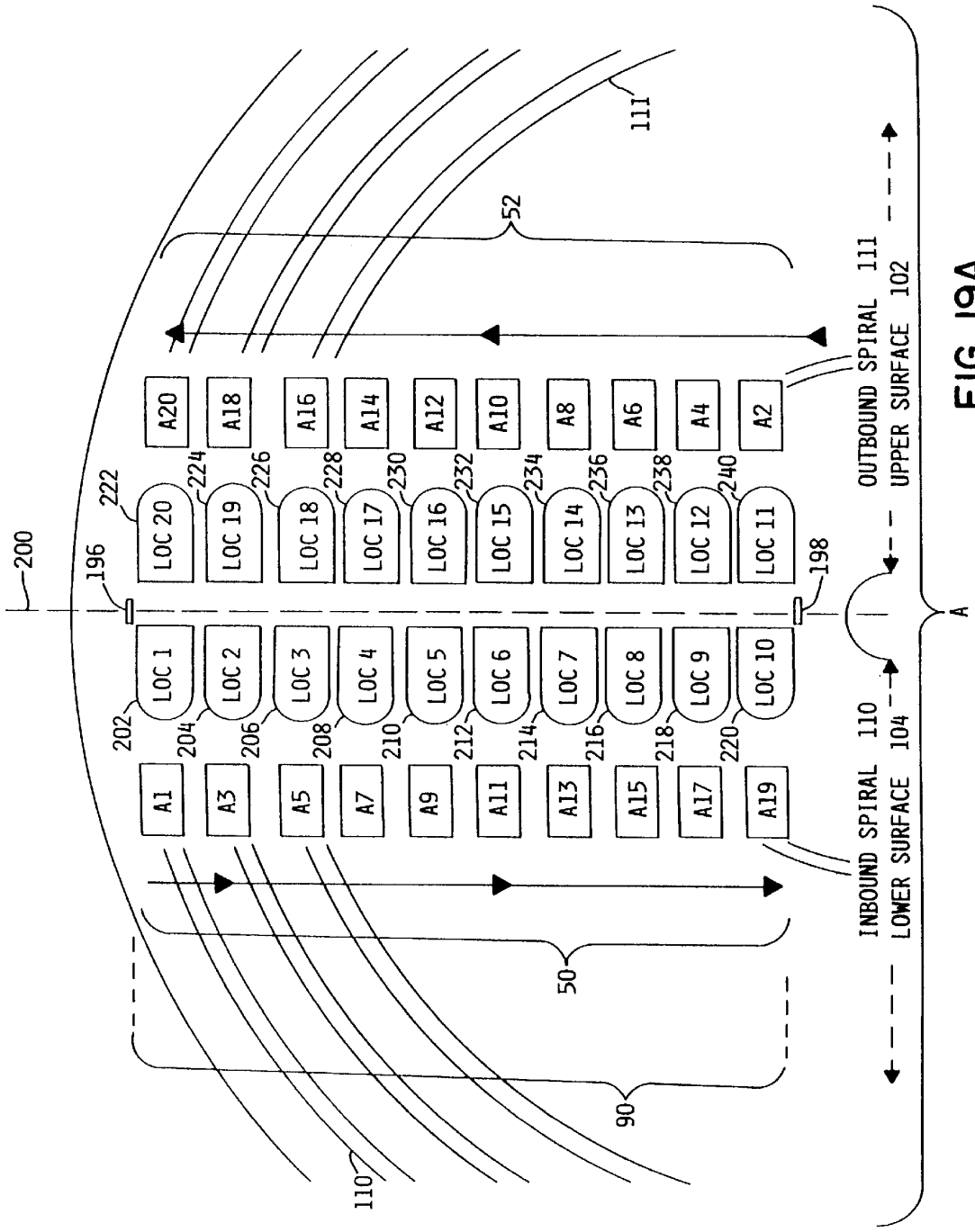
200
196
198
222
224
226
228
230
232
234
236
238
240
202
204
206
208
210
212
214
216
218
220
LOC 20
LOC 19
LOC 18
LOC 17
LOC 16
LOC 15
LOC 14
LOC 13
LOC 12
LOC 11
LOC 1
LOC 2
LOC 3
LOC 4
LOC 5
LOC 6
LOC 7
LOC 8
LOC 9
LOC 10
A20
A18
A16
A14
A12
A10
A8
A6
A4
A2
A1
A3
A5
A7
A9
A11
A13
A15
A17
A19
52
50
90
110
111
OUTBOUND SPIRAL 111
UPPER SURFACE 102
INBOUND SPIRAL 110
LOWER SURFACE 104
A

FIG. 19A

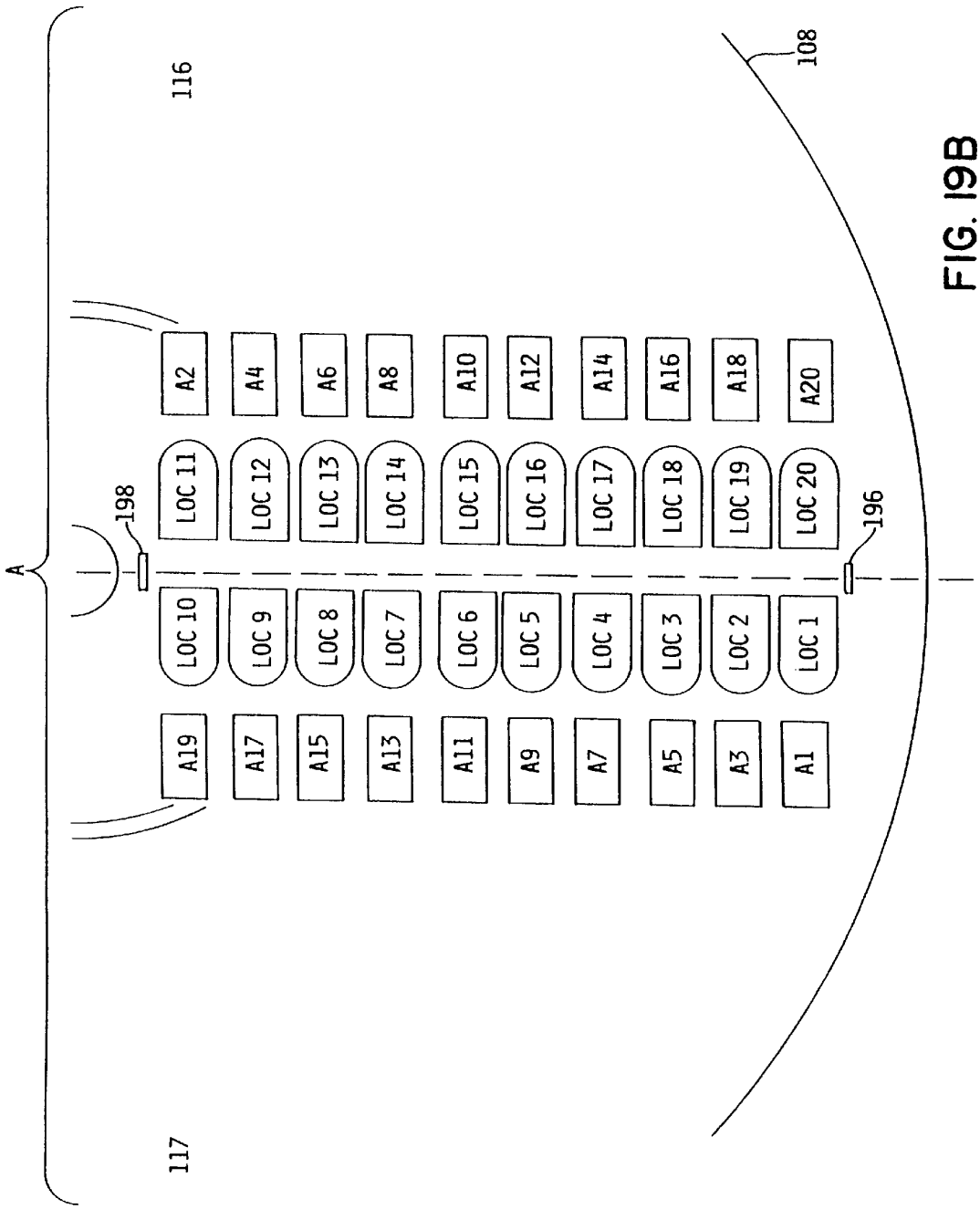
A
116
117
108
198
196
A2
A4
A6
A8
A10
A12
A14
A16
A18
A20
LOC 11
LOC 12
LOC 13
LOC 14
LOC 15
LOC 16
LOC 17
LOC 18
LOC 19
LOC 20
LOC 10
LOC 9
LOC 8
LOC 7
LOC 6
LOC 5
LOC 4
LOC 3
LOC 2
LOC 1
A19
A17
A15
A13
A11
A9
A7
A5
A3
A1

FIG. 19B

	RUN 1	RUN 2	RUN 3	RUN 4	RUN 5	RUN 6	RUN 7	RUN 8	RUN 9	RUN 10	RUN 11	RUN N
LOC-1	WR A1	S A1	S A1	W A21	S A21	R A21	S A21	S A21	R A41	S A41	R A41	. . .
LOC-2	W A5	R A5	S A5	S A5	W A25	S A25	R A25	S A25	S A25	S A45	S A45	. . .
LOC-3	--	W A9	R A9	S A9	S A9	W A29	S A29	R A29	S A29	S A29	W A49	. . .
LOC-4	--	W A13	S A13	R A13	S A13	S A13	W A33	S A33	R A33	S A33	S A33	. . .
LOC-5	--	--	W A17	S A17	R A17	S A17	S A17	W A37	S A37	R A37	S A37	. . .
LOC-6	WR A2	S A2	S A2	W A22	S A22	R A22	S A22	S A22	W A42	S A42	R A42	. . .
LOC-7	W A6	R A6	S A6	S A6	W A26	S A26	R A26	S A26	S A26	W A46	S A46	. . .
LOC-8	--	W A10	R A10	S A10	S A10	W A30	S A30	R A30	S A30	S A30	W A50	. . .
LOC-9	--	W A14	S A14	R A14	S A14	S A14	W A34	S A34	R A34	S A34	S A34	. . .
LOC-10	--	--	W A18	S A18	R A18	S A18	S A18	W A38	S A38	R A38	S A38	. . .

53

55

A

B

FIG. 20A

A B

LOC-11	WR A3	S A3	S A3	W A23	S A23	R A23	S A23	S A23	W A43	S A43	R A43	. . .
LOC-12	W A7	R A7	S A7	S A7	W A27	S A27	R A27	S A27	S A27	W A47	S A47	. . .
LOC-13	--	W A11	R A11	S A11	S A11	W A31	S A31	R A31	S A31	S A31	W A51	. . .
LOC-14	--	W A15	S A15	R A15	S A15	S A15	W A35	S A35	R A35	S A35	S A35	. . .
LOC-15	--	--	W A19	S A19	R A19	S A19	S A19	W A39	S A39	R A39	S A39	. . .
LOC-16	WR A4	S A4	S A4	W A24	S A24	R A24	S A24	S A24	W A44	S A44	R A44	. . .
LOC-17	W A8	R A8	S A8	S A8	W A28	S A28	R A28	S A28	S A48	W A48	S A48	. . .
LOC-18	--	W A12	R A12	S A12	S A12	W A32	S A32	R A32	S A32	S A32	W A52	. . .
LOC-19	--	--	W A16	R A16	S A16	S A16	W A36	S A36	R A36	S A36	S A36	. . .
LOC-20	--	--	W A20	S A20	R A20	S A20	S A20	W A40	S A40	R A40	S A40	. . .

57

59

SYMBOLS: W = Write Operation (Update-in-place)
R = Read Operation (Movie Time)
S = Skip

FIG. 20B

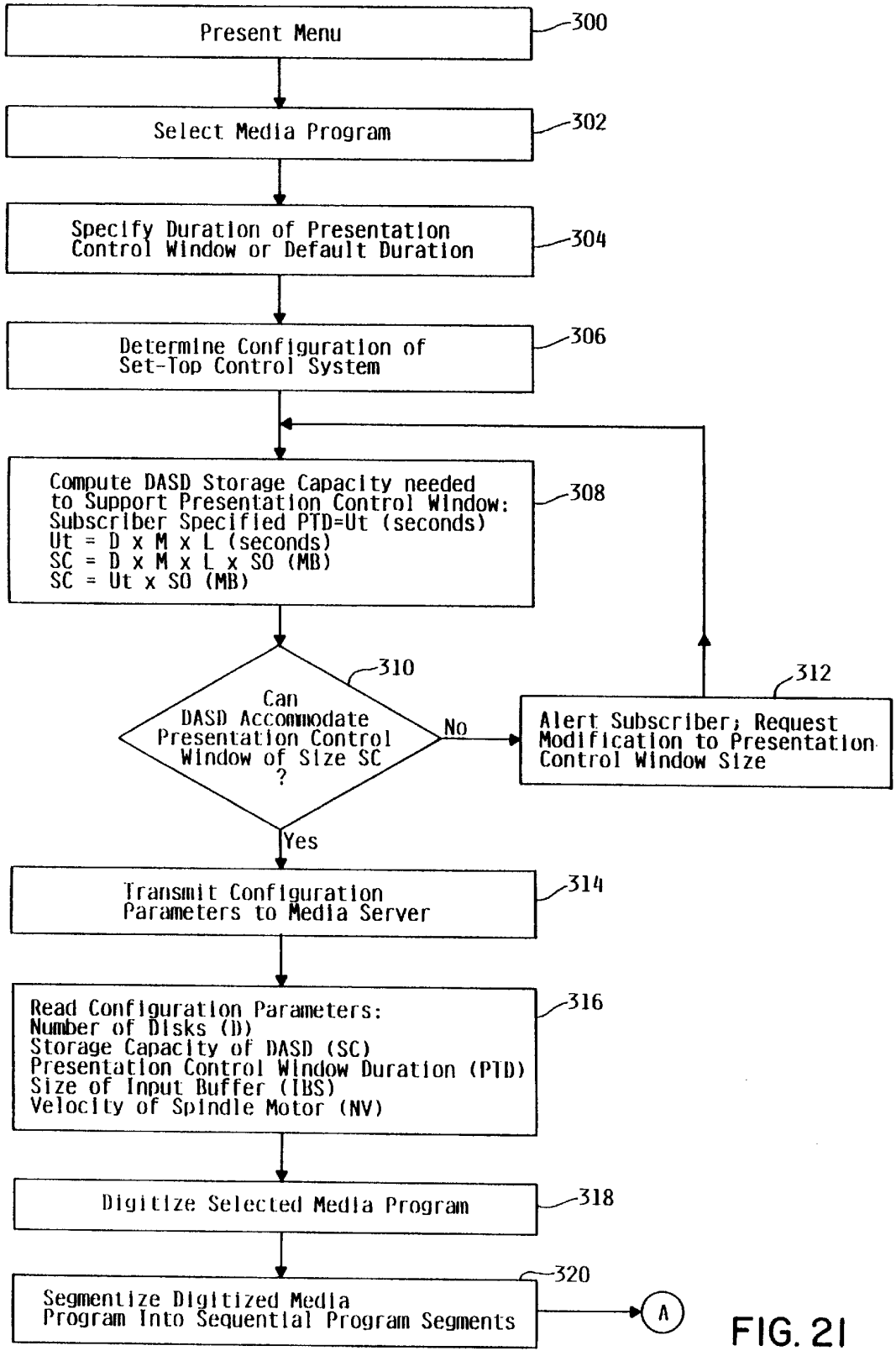
Present Menu
300
Select Media Program
302
Specify Duration of Presentation Control Window or Default Duration
304
Determine Configuration of Set-Top Control System
306
Compute DASD Storage Capacity needed to Support Presentation Control Window:
Subscriber Specified PTD=Ut (seconds)
Ut = D x M x L (seconds)
SC = D x M x L x SO (MB)
SC = Ut x SO (MB)
308
Can DASD Accommodate Presentation Control Window of Size SC ?
310
No
Alert Subscriber; Request Modification to Presentation Control Window Size
312
Yes
Transmit Configuration Parameters to Media Server
314
Read Configuration Parameters:
Number of Disks (D)
Storage Capacity of DASD (SC)
Presentation Control Window Duration (PTD)
Size of Input Buffer (IBS)
Velocity of Spindle Motor (NV)
316
Digitize Selected Media Program
318
Segmentize Digitized Media Program Into Sequential Program Segments
320
A

FIG. 21

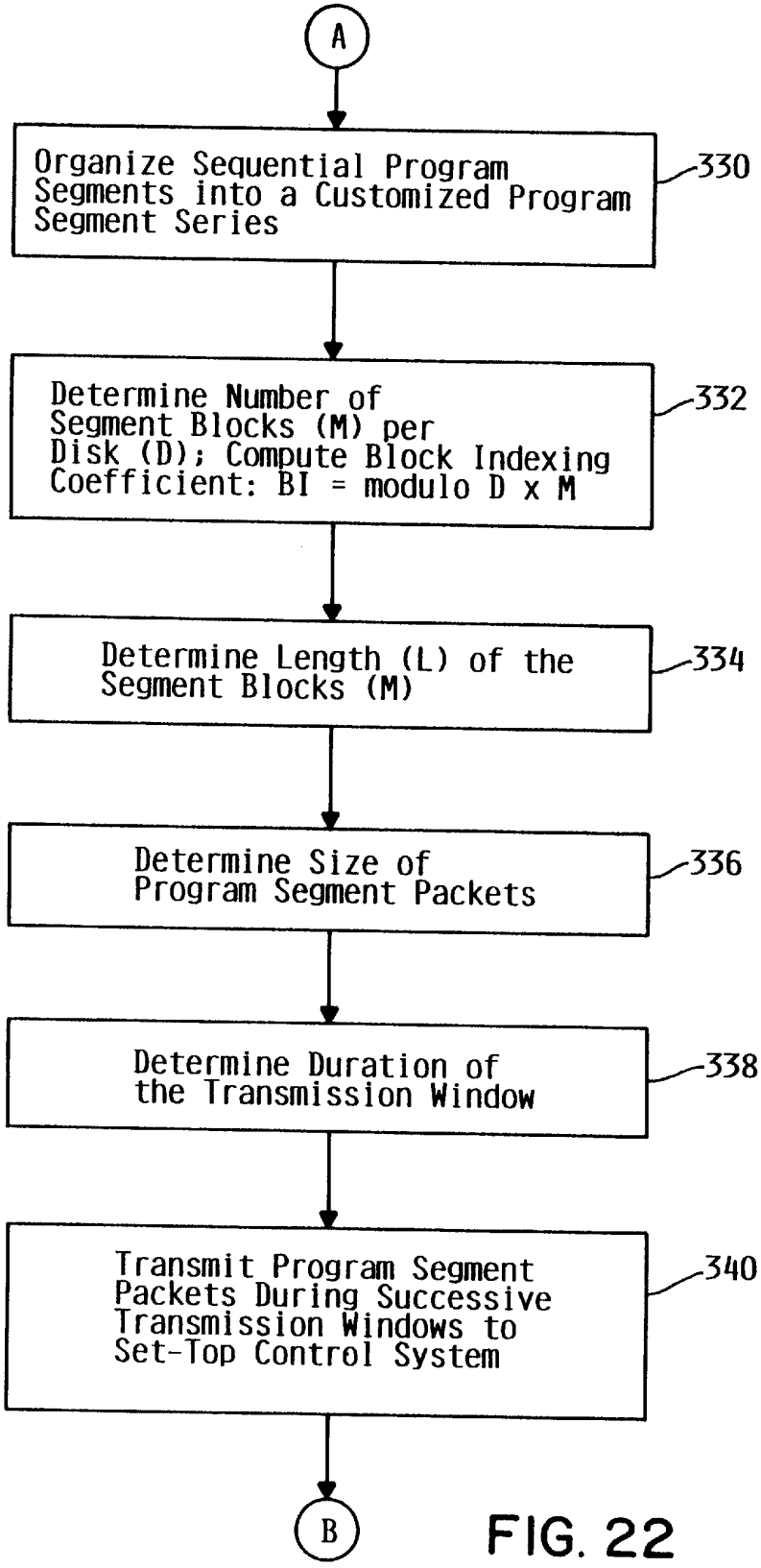
A
Organize Sequential Program Segments into a Customized Program Segment Series
330
Determine Number of Segment Blocks (M) per Disk (D); Compute Block Indexing Coefficient: BI = modulo D x M
332
Determine Length (L) of the Segment Blocks (M)
334
Determine Size of Program Segment Packets
336
Determine Duration of the Transmission Window
338
Transmit Program Segment Packets During Successive Transmission Windows to Set-Top Control System
340
B

FIG. 22

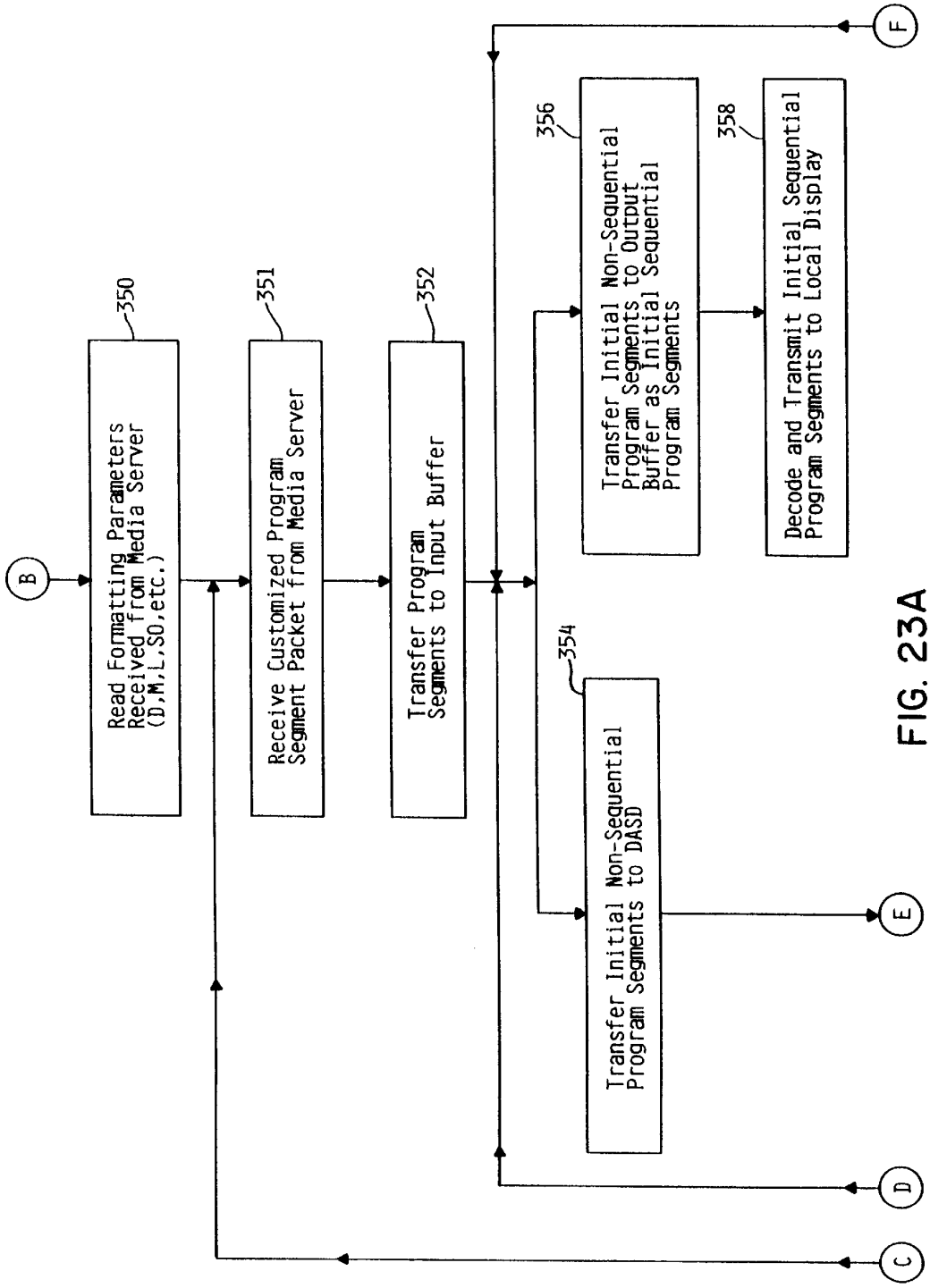
B
350
Read Formatting Parameters Received from Media Server (D,M,L,SO,etc.)
351
Receive Customized Program Segment Packet from Media Server
352
Transfer Program Segments to Input Buffer
354
Transfer Initial Non-Sequential Program Segments to DASD
356
Transfer Initial Non-Sequential Program Segments to Output Buffer as Initial Sequential Program Segments
358
Decode and Transmit Initial Sequential Program Segments to Local Display
C
D
E
F

FIG. 23A

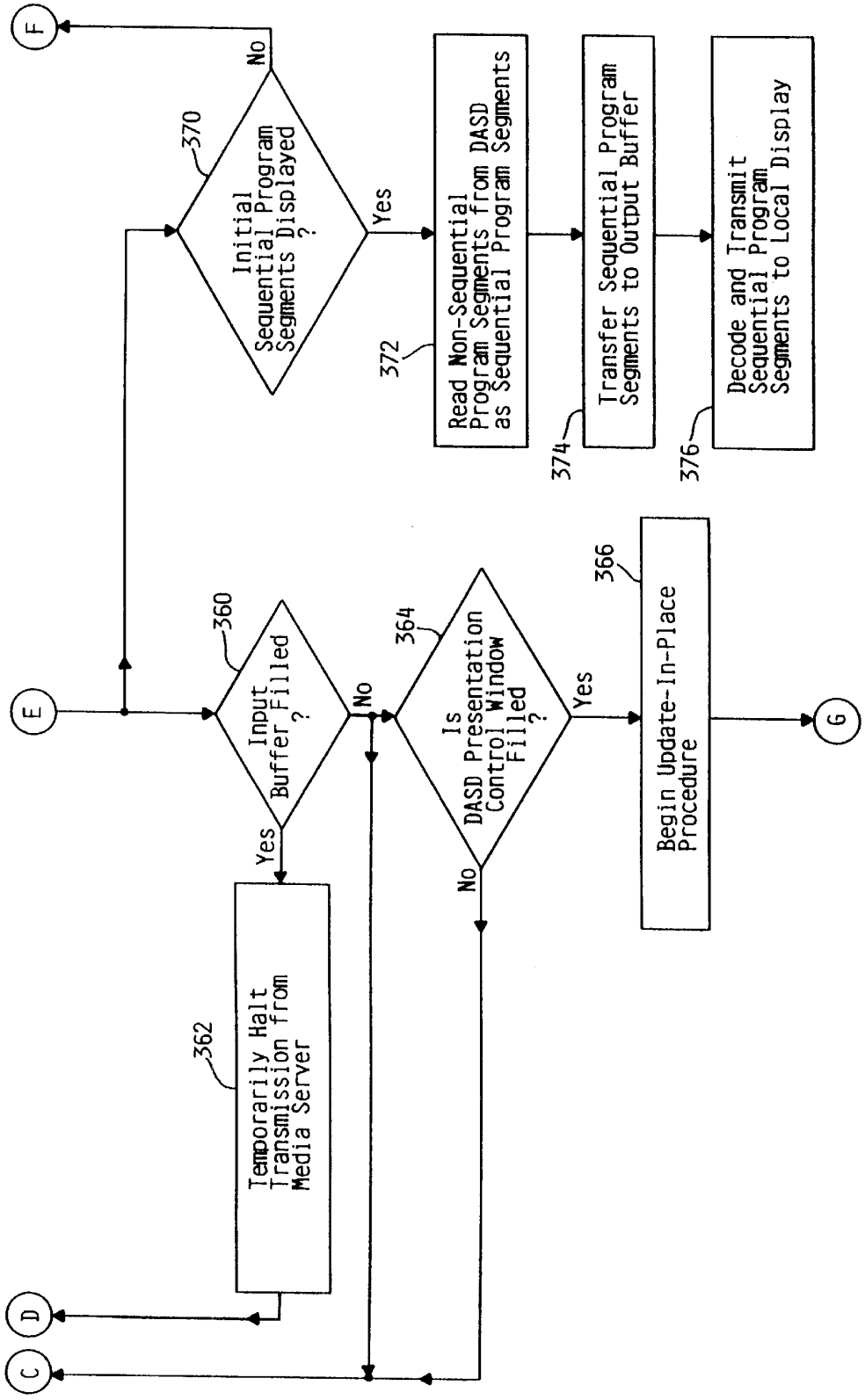
E
Input Buffer Filled ?
360
Yes
No
Temporarily Halt Transmission from Media Server
362
D
C
Is DASD Presentation Control Window Filled ?
364
Yes
No
Begin Update-In-Place Procedure
366
G
Initial Sequential Program Segments Displayed ?
370
Yes
No
F
Read Non-Sequential Program Segments from DASD as Sequential Program Segments
372
Transfer Sequential Program Segments to Output Buffer
374
Decode and Transmit Sequential Program Segments to Local Display
376

FIG. 23B

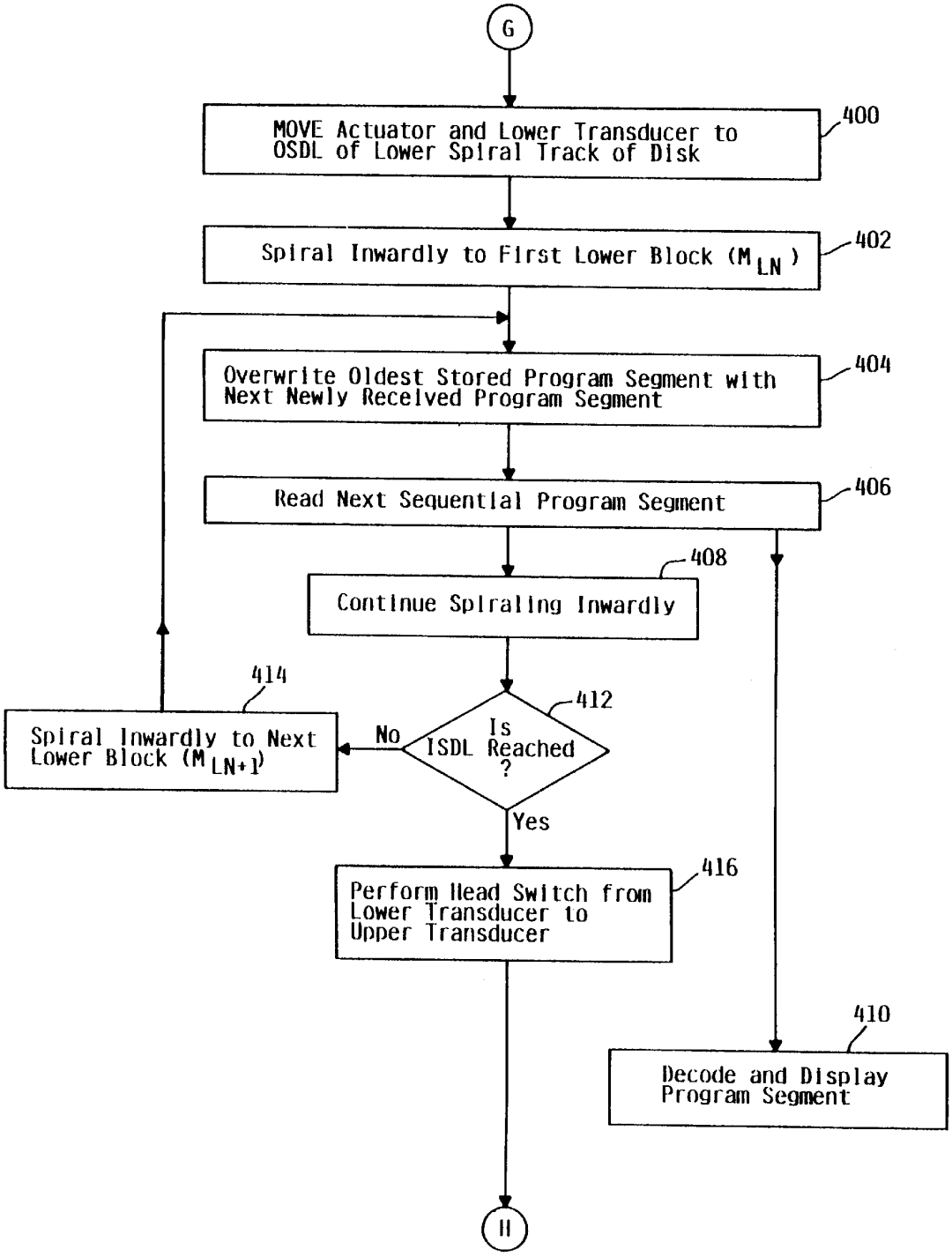
G
MOVE Actuator and Lower Transducer to OSDL of Lower Spiral Track of Disk
400
Spiral Inwardly to First Lower Block (M_{LN})
402
Overwrite Oldest Stored Program Segment with Next Newly Received Program Segment
404
Read Next Sequential Program Segment
406
Continue Spiraling Inwardly
408
Is ISDL Reached ?
412
No
Yes
Spiral Inwardly to Next Lower Block (M_{LN+1})
414
Perform Head Switch from Lower Transducer to Upper Transducer
416
Decode and Display Program Segment
410
H

FIG. 24

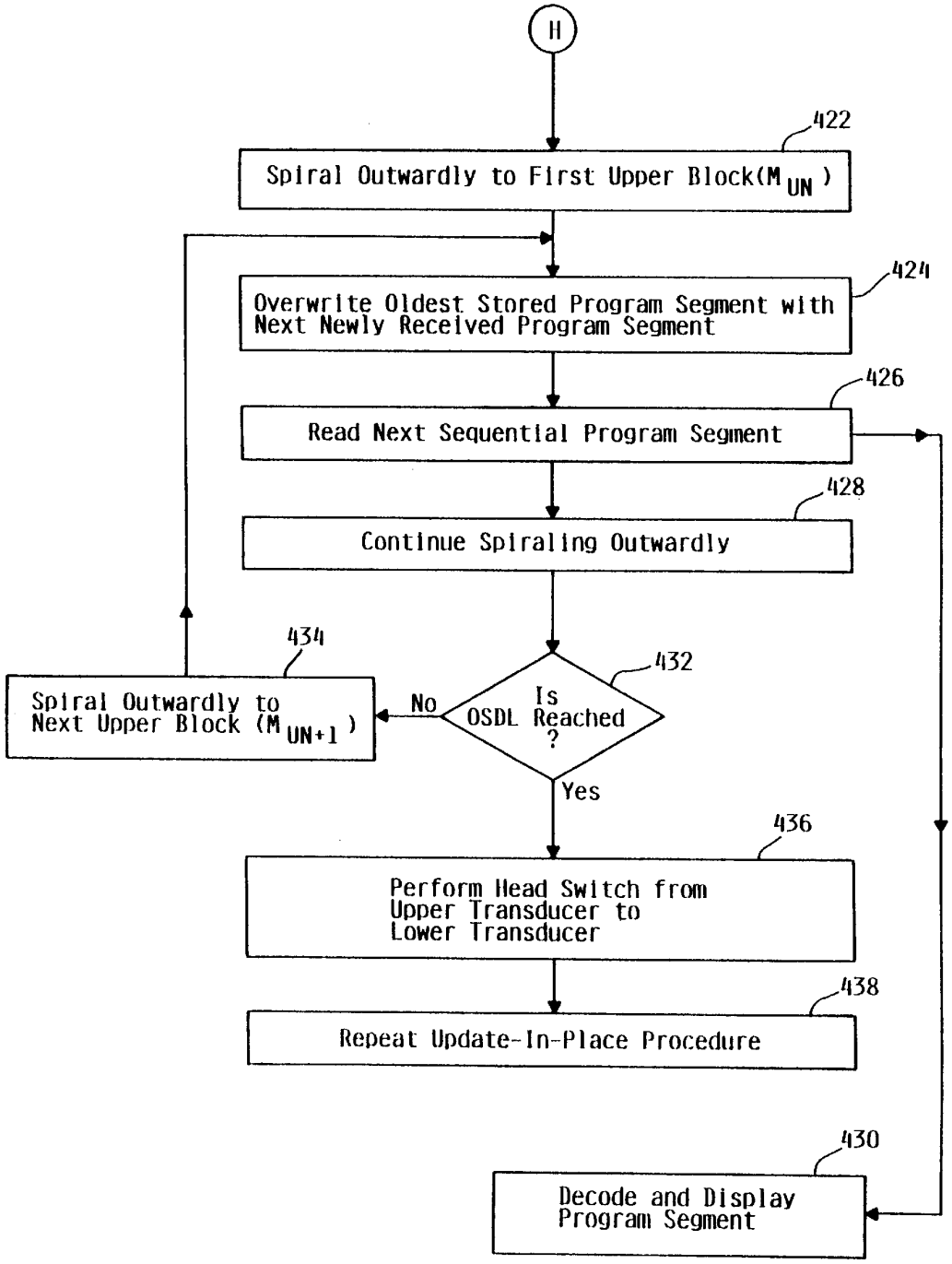
H
422
Spiral Outwardly to First Upper Block(M_{UN})
424
Overwrite Oldest Stored Program Segment with Next Newly Received Program Segment
426
Read Next Sequential Program Segment
428
Continue Spiraling Outwardly
434
Spiral Outwardly to Next Upper Block (M_{UN+1})
No
432
Is OSDL Reached ?
Yes
436
Perform Head Switch from Upper Transducer to Lower Transducer
438
Repeat Update-In-Place Procedure
430
Decode and Display Program Segment

FIG. 25

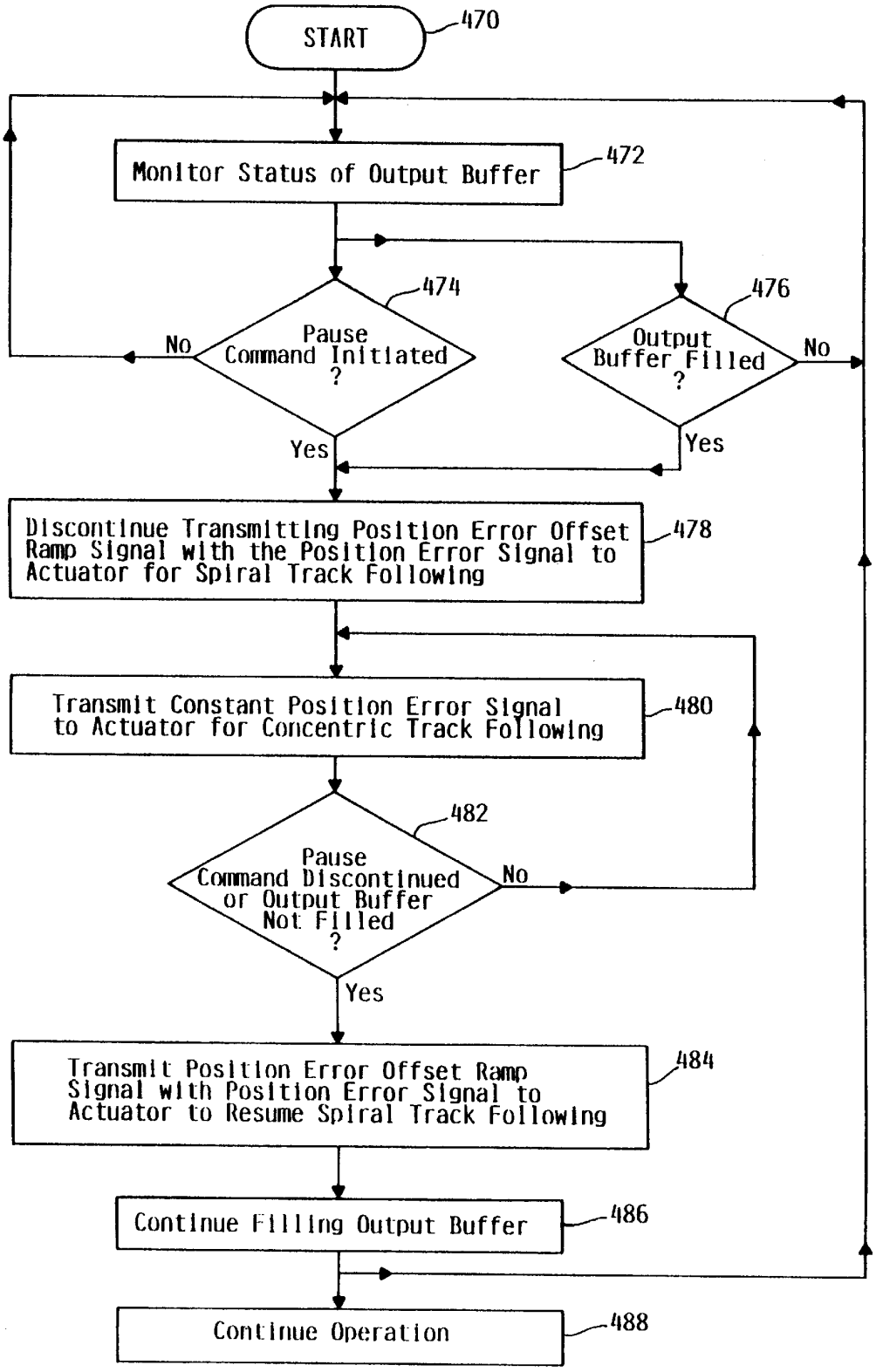
START
470
Monitor Status of Output Buffer
472
474
Pause Command Initiated ?
No
Yes
476
Output Buffer Filled ?
No
Yes
Discontinue Transmitting Position Error Offset Ramp Signal with the Position Error Signal to Actuator for Spiral Track Following
478
Transmit Constant Position Error Signal to Actuator for Concentric Track Following
480
482
Pause Command Discontinued or Output Buffer Not Filled ?
No
Yes
Transmit Position Error Offset Ramp Signal with Position Error Signal to Actuator to Resume Spiral Track Following
484
Continue Filling Output Buffer
486
Continue Operation
488

FIG. 26

MULTIMEDIA SERVER SYSTEM AND METHOD FOR COMMUNICATING MULTIMEDIA INFORMATION

RELATED INVENTIONS

The present invention is related to:

co-pending U.S. patent application Ser. No. 08/288,525, filed on Aug. 8, 1994, which is entitled "Apparatus and Method for Providing Multimedia Data;"

co-pending U.S. patent application Ser. No. 08/488,329, filed on Jun. 7, 1995, which is entitled "Media-on-Demand Communication Method and Apparatus;"

co-pending U.S. patent application Ser. No. 08/488,328, filed on Jun. 7, 1995, which is entitled "Multimedia Control System and Method for Controlling Multimedia Program Presentation;" and

co-pending U.S. patent application Ser. No. 08/472,506, filed on Jun. 7, 1995, which is entitled "Multimedia Direct Access Storage Device and Formatting Method," all of which are assigned to the assignee of the present invention.

FIELD OF THE INVENTION

The present invention relates generally to server-based storage and communication systems, and, more particularly, to a multimedia server system and method for communicating multimedia information.

BACKGROUND OF THE INVENTION

Advancements in communications technology and increased consumer sophistication have challenged the distributors of multimedia programming to provide the subscribing public with entertainment services more convenient and accessible than those traditionally made available over cable television and telephone systems. An improving communications infrastructure has resulted in a proliferation of pay-per-view media services in many of the larger broadcast markets. Most pay-per-view systems permit the consumer to choose from a relatively small number of motion picture selections for home viewing, with the selected programs generally being presented only at pre-scheduled viewing times.

A number of on-demand video services have been developed that permit the consumer to order desired programs for home viewing through the household telephone line. For example, U.S. Pat. No. 5,247,347, assigned to Bell Atlantic Network Services, discloses a sophisticated video-on-demand telephone service that provides consumer ordered video programming to a plurality of households through use of a public switched telephone network (PSTN). An extensive discussion regarding the inherent deficiencies of communicating video and other multimedia signals over standard bandwidth limited analog telephone lines is provided in the '347 patent.

The video-on-demand system disclosed in the '347 patent and other conventional telephony-based multimedia services fail to satisfactorily address the adverse impact to home communications during periods of prolonged program viewing. For example, a typical theatrical motion picture can tie up the household telephone line for over two hours. Further, such sophisticated telephony-based multimedia services generally require procurement of expensive communications and diagnostic equipment by the pay-per-view provider to ensure a reasonable level of signal quality and system reliability. These and other related operating expenses, however, are typically passed on to the consumer.

Importantly, conventional multimedia services fail to provide media presentation control features now expected by the sophisticated consumer after enjoying more than a decade of home entertainment through the use of a video cassette recorder (VCR). Functions such as fast forward, reverse, and pause, for example, are standard presentation control functions now provided by all or most home VCRs, and are typically effectuated by use of an infrared (IR) remote control handset. The limited transmission bandwidth of household telephone lines, as well as common cable television channels, generally precludes accommodation of full VCR-type control functionality when employed to support a conventional multimedia communication system adapted to provide on-demand service to a large number of subscribing customers.

In FIG. **1**, for example, there is illustrated a generalized block diagram of a conventional pay-per-view communication service for providing video program distribution to a plurality of households over a public switched telephone network. Movies are typically stored on one or more media servers **10**, each of which is multiplexed to the PSTN **16**. A telephonic ordering system **14** is generally coupled to the PSTN **16**, and provides a means for accepting a pay-per-view order from a customer or user **20** over the telephone. Upon verifying the account status of a user **20**, the media server **10** typically transmits the ordered movie or program to a decoder box **22** coupled to the customer's telephone line **18**. The transmitted program is continuously decoded by the decoder box **22** to provide continuous presentation of the selected program on the customer's television **24**. Limitations in the transmission bandwidth of the telephone lines **18**, as well as limitations in the switching capability of the PSTN **16**, generally preclude the use of a PSTN **16** to support a media communication system that provides high quality, full-motion video signal transmission with full VCR-type control functionality. Such limitations similarly impact a conventional pay-per-view video communication service that utilizes cable television lines.

Other video communication systems, such as that disclosed in U.S. Pat. No. 4,949,187, provide a local disk storage system for storing a digitized multimedia program received from a central archive library. After establishing a telephonic link with the central server **10** over a PSTN telephone network, a selected digitized movie is downloaded in its entirety into the disk storage system incorporated into the terminal unit disclosed in the '187 patent. This and other home communication systems that employ disk storage systems to provide local storage of a selected multimedia program generally require downloading of the entire multimedia program prior to viewing the program on the subscriber's television.

Depending on the bandwidth of the telephone line and source transmission rate, the downloading procedure may delay viewing of a selected movie for an appreciable amount of time. Very-high capacity data storage systems are generally required to locally store an entire feature-length movie. Such local data storage systems must generally be configured to allocate several gigabytes of memory for storing a typical movie in a compressed form, and several hundred gigabytes of memory for storing a typical non-compressed movie.

The excessively large memory requirement of these and other conventional local data storage systems employed to store video programming in accordance with a conventional media communication methodology generally results in a commercial product that is prohibitively expensive for the average consumer. Also, such systems cannot provide

instantaneous viewing of a selected multimedia program immediately upon receiving the transmission of the program signals from the server **10**. Moreover, VCR-type control functionality can only be provided, if at all, after downloading the entire multimedia program onto the disk storage system.

There exists a need in the communications industry for a media-on-demand communication system that provides local VCR-type control over the presentation of a selected multimedia program at a minimal cost to the consumer. There exists a further need to provide a multimedia communication system that can efficiently distribute programming to a plurality of subscribing customers without requiring complex and typically expensive server processing hardware and software at the remote communication distribution center. The present invention fulfills these and other needs.

SUMMARY OF THE INVENTION

The present invention is a multimedia server system and a method for communicating multimedia programming to distantly situated media control systems. The multimedia server system includes a mass storage library for storing a plurality of multimedia programs. A multimedia program is coded in accordance with a predetermined compression standard and stored in a compressed digital format as sequentially ordered discrete program segments in the mass storage library, with each of program segments being representative of a unique portion of the multimedia program. A video parser organizes the sequentially ordered program segments of a multimedia program into a custom ordered series of program segments preferably including non-sequentially and sequentially ordered program segments in accordance with configuration parameters associated with the configuration and presentation control features of a media control system requesting the multimedia program. Concurrent transmission of a plurality of custom ordered series of program segments to a corresponding plurality of distantly located media control systems is facilitated by an asynchronous transfer mode distribution switch. The custom ordered series of program segments are processed by a local media control system to provide for the sequential presentation of the program segments on a local display and for providing local VCR-type control functions.

BRIEF DESCRIPTION OF THE DRAWINGS

FIG. **1** is a block diagram of a conventional communication system for distributing selected video programs to a plurality of users;

FIG. **2** is a generalized block diagram of a novel multimedia communication system for distributing multimedia programs concurrently to a plurality of subscriber set-top control systems preferably on an on-demand, pay-per-view basis;

FIG. **3** is a generalized block diagram of a novel multimedia server for communicating a synchronous, asynchronous, or combined synchronous/asynchronous series of source program segments representative of a selected multimedia program to a plurality of subscriber set-top control systems preferably on an on-demand, pay-per-view basis;

FIG. **4** is a generalized block diagram of a mass storage library portion of a novel multimedia server;

FIG. **5** is an illustration of a partial series of synchronous compressed source program segments, with each discrete program segment being representative of a predetermined time portion of a multimedia program;

FIG. **6** is an illustration of a customized series of discrete source program segments including an asynchronous source program segment series portion followed by a synchronous source program segment series portion, with each discrete source program segment being representative of a predetermined time portion of a multimedia program;

FIG. **7** is an illustration of an initially synchronously ordered series of source program segments representative of a two-hour multimedia program arranged as a 60×120 matrix of 7,200 discrete one-second source program segments;

FIG. **8** is an illustration of 7,200 discrete one-second source program segments representative of a two-hour multimedia program arranged in a 20×360 customized matrix comprising two 10×360 sub-matrices or blocks, with each block containing 3,600 asynchronously ordered discrete one-second source program segments;

FIG. **9** is an illustration of 3,600 discrete two-second source program segments representative of a two-hour multimedia program arranged in a 20×180 customized matrix comprising four 5×180 sub-matrices or blocks, with each of the four blocks containing 900 asynchronously ordered discrete two-second compressed source program segments;

FIG. **10** is a depiction of the asynchronously ordered source video segments contained in the first twelve segment packets transmitted by a novel multimedia server during successive transmission windows;

FIG. **11** is a generalized block diagram of a novel intelligent set-top control system adapted to communicate with a remote multimedia server to facilitate asynchronous formatting of source program segments on a multimedia DASD received from the multimedia server preferably on an on-demand, pay-per-view basis;

FIG. **12** is a depiction of a novel presentation control window effectuated using a novel intelligent set-top control system for controlling a portion of a multimedia program presentation in a plurality of presentation modes, including forward, reverse, and pause modes;

FIG. **13** is an illustration of a novel multimedia direct access storage device of a set-top control system adapted for buffering a predetermined number of discrete source program segments representative of at least a portion of a multimedia program to provide full local VCR-type control of the buffered portion of the selected multimedia program;

FIG. **14** is an exaggerated side plan view of a novel multimedia direct access storage device of a set-top control system including a plurality of data storage disks adapted for buffering discrete source program segments representative of at least a portion of a multimedia program;

FIG. **15** is an illustration of a novel data storage architecture for buffering synchronously and asynchronously ordered discrete source program segments on an outwardly spiralling data track disposed on an upper surface of a data storage disk;

FIG. **16** is an illustration of a novel data storage architecture for buffering synchronously and asynchronously ordered discrete source program segments on an inwardly spiralling data track disposed on a lower surface of a data storage disk;

FIG. **17** is an illustration of the first twenty asynchronously ordered source program segments defining a twenty second presentation control window buffer to be distributed on a lower and an upper surface of a data storage disk, with

each discrete source program segment being representative of a one-second time portion of a multimedia program;

FIG. **18** is a depiction of twenty data storage locations defining a twenty second presentation control window disposed on a lower and an upper surface of a data storage disk, and a novel method for writing and reading discrete source program segments to and from the ten storage locations disposed on each of the lower and upper disk surfaces;

FIG. **19** is a composite illustration of a lower surface of a data storage disk superimposed along side of an upper surface of the data storage disk, with ten data storage locations disposed on each of the lower and upper disk surfaces for buffering at any one time twenty discrete source program segments comprising a twenty second presentation control window buffer in accordance with a novel formatting methodology;

FIG. **20** is a depiction of forty data storage locations disposed on a lower and an upper surface of a data storage disk defining a forty second presentation control window, and a novel method for writing and reading discrete source program segments to and from the ten storage locations organized into two segment blocks disposed on each of the lower and upper disk surfaces;

FIGS. **21–22** are flow charts depicting general processing steps performed by a novel multimedia server when communicating with a subscriber's set-top control system to provide on-demand transmission of source program segments representative of a multimedia program in accordance with configuration parameters associated with the configuration of a presentation control window buffer provided on a novel multimedia direct access storage device of the subscriber's set-top control system;

FIG. **23** is a flow chart depicting general processing steps performed by a novel intelligent set-top control system when communicating with a remote multimedia server to receive on-demand transmission of source program segments representative of a selected multimedia program in accordance with configuration parameters associated with the configuration of a presentation control window buffer provided on a novel multimedia direct access storage device of the set-top control system;

FIGS. **24–25** are flow charts depicting general processing steps performed by a novel intelligent set-top control system when writing a custom ordered series of discrete source program segments representative of a portion of a selected multimedia program to a presentation control window buffer provided on a novel multimedia direct access storage device, and when reading the discrete source program segments as a sequentially ordered series of discrete local program segments from the direct access storage device in accordance with a novel update-in-place formatting methodology; and

FIG. **26** is a flow chart depicting general processing steps associated with effectuating a spiral-and-hold operation of a novel multimedia direct access storage device.

DETAILED DESCRIPTION OF THE PREFERRED EMBODIMENTS

The present invention, as previously indicated, relates to a multimedia server system and method for communicating multimedia information over a communication channel to distantly located media control systems, preferably on an on-demand, pay-per-view basis. The present application describes the entire multimedia communication system and process for providing multimedia program distribution from a remote multimedia server system to a plurality of distantly located set-top control systems. As such, there are described in the present application various features and functions of the multimedia communication system which are not the subject of the presently claimed subject matter, but are the subject of inventions claimed in co-pending applications filed concurrently with this application. The description of these features and functions are included in the present application for purposes of completeness, and to permit a full appreciation of the advantages and features of an multimedia set-top control system as disclosed herein.

Multimedia Communication System

Referring now to the drawings, and more particularly to FIG. **2**, there is shown a system block diagram of a multimedia communication system employing a novel multimedia server **30** configured to communicate multimedia programs to a plurality of set-top control systems **62** concurrently over a communication channel **44**. In one embodiment, the multimedia server **30** transmits a video program or other visual or audio presentation as a customized series of compressed digital source program segments to a subscribing customer's set-top control system **62** on an on-demand, pay-per-view basis. The program segments may be representative of video, animation, photographic, audio, textual, graphical, and other types information. A direct access storage device (DASD) is preferably coupled to the local set-top control system **62** for buffering a portion or all of the multimedia program received from the multimedia server **30**.

A novel DASD formatting methodology is employed to buffer the customized series of compressed digital source program segments representative of a portion of the multimedia program to provide a subscriber with local VCR-type control of the presentation of the multimedia program portion buffered on the DASD, including presentation control functions such as fast forward, reverse, and pause. The multimedia program may, for example, be transmitted from the local set-top control system **62** to a subscriber's television **24**, home stereo, or computer system by use of a standard household transmission line or pair of infrared transceivers. In one embodiment, the multimedia server **30** customizes the order of the source program segments in response to formatting and configuration parameters associated with the configuration and control functions of a subscriber's unique local set-top control system **62**.

The novel formatting methodology provides for a significant decrease in the complexity and cost of operating and maintaining a central multimedia server system **30** adapted for distributing media-on-demand programming to a plurality of set-top control systems **62**. It is noted that a set-top control system **62** may be located at a household, a business location, such as a restaurant or bar, or other private or public location. VCR-type presentation control functionality, including rewind, fast forward, pause, and other presentation modes, are locally coordinated directly by the set-top control system **62**. By providing local control over the presentation of a multimedia program, the central multimedia server **30** need not be configured to effectuate VCR-type control functions typically desired by the subscribing customer.

Those skilled in the art will readily appreciate the significant difficulty of simultaneously servicing VCR-type presentation control function requests at a central media distribution site during the communication of user-selected programs transmitted concurrently to a plurality of customers on an on-demand, real-time basis. Providing the subscribing customer local control of a media presentation directly through the set-top control system **62** provides for a

significant decrease in the bandwidth of the communication channel **44** and the amount of multimedia server **30** processing overhead that would otherwise be required to service VCR-type presentation control function requests from a plurality of pay-per-view customers.

A user of the set-top control system **62** preferably communicates with the multimedia server **62** over an existing communication channel **44**, such as a cable television connection, for example. It is understood that a plurality of subscribing customers can concurrently communicate with the multimedia server **30** by use of the set-top control system **62**, which may be situated proximate to or remotely from a television **24** or entertainment center within the subscribing customer's home or business establishment. A communications interface preferably couples the set-top control system **62** to a cable line or other communication line interfacing with the communication channel **44**. The communications interface preferably includes a transceiver capable of both receiving and transmitting multimedia information, control, and other electrical signals communicated over the communication channel **44**. Alternatively, the communications interface may include a separate receiver and transmitter for effectuating communication over the communication channel **44**.

The multimedia information transmitted from the multimedia server **30** to a plurality of set-top control systems **62** is preferably transmitted in a digitally compressed format. A compression algorithm standard suitable for use by the novel media-on-demand communication system is one developed by the Moving Pictures Experts Group, and is generally referred to as an MPEG coding standard. The MPEG-1 standard (ISO/IEC IS 11172-1), for example, defines a format for compressed digital video which supports data rates of approximately 1.2 to 1.5 megabits per second (Mbps), resolutions of about 352 pixels (picture elements) horizontally to about 288 lines vertically, picture rates of about 24 to 30 pictures per second, and several VCR-like viewing functions, such as normal forward, play, slow forward, fast forward, fast reverse, and freeze. MPEG-1 coding provides compression ratios typically on the order of 100:1 to 150:1.

A new developing MPEG standard, referred to in the art as MPEG-2 (ISO/IEC IS 11172-2), is expected to support data rates on the order of approximately 2 to 15 Mbps over cable, satellite, and other broadcast channels. In addition to a video signal stream and an audio signal stream, MPEG-2 specifies an associated data signal stream that, together with the video and audio signal streams, comprise the multiplexed program bitstream. MPEG-2 will additionally support both non-interlaced and interlaced video signal formats, increased image quality over that provided by MPEG-1, multiple picture aspect ratios, and a number of other advanced features, including features to support High Definition Television (HDTV). It is noted that the MPEG-1 audio compression standard (ISO/IEC IS 11172-3) and developing MPEG-2 audio compression standard set forth audio compression specifications that are suitable for coding audio programs processed by the multimedia sever **30**. It is to be understood that coding standards other than those conforming to one or more of the above-described MPEG standards may be employed to facilitate communication of video, audio, and other multimedia program signals between the multimedia server **30** and a plurality of customer set-top control systems **62** without departing from the scope and spirit of the present invention. For example, program signals transmitted over the communication channel **44** may be of a format other than a compressed digital format.

For purposes of explanation, the advantages and features of the disclosed media-on-demand communication method and apparatus will be discussed generally with reference to full-motion video. Full-motion video is useful for this purpose since video is generally a composite media comprising both video and audio components, and may also include other information components, such as subtitle or hearing-impaired information. Also, coding of full-motion video in accordance with an MPEG specification produces a multiplexed program signal stream that is well-suited for illustrating the advantages of the novel media-on-demand communication method and apparatus. It is to be understood that the references hereinbelow to video media are for purposes of explanation only, and do not represent limitations on the type and nature of multimedia programs and information stored on and processed by the multimedia server **30**.

Multimedia Server

Turning now to FIGS. **3–4**, there is illustrated an embodiment of a novel multimedia server **30** for storing and processing a variety of multimedia programs, and for distributing selected multimedia programs concurrently to a plurality of end-users, preferably on an on-demand, pay-per-view basis. The multimedia programs are preferably stored in a mass storage library **40** comprising one or more mass storage devices which, individually or cumulatively, include non-volatile memory devices capable of storing mass amounts of information, typically on the order of terabytes. The multimedia server **30** may include storage and distribution devices situated at a central media distribution site or may include a number of storage and distribution resources provided at a plurality of sites, with the remotely located resources communicating over a wide area network (WAN), for example.

Multimedia information is preferably stored in a compressed digital format on one or more digital storage devices **35**. Suitable digital storage devices **35** include, for example, digital direct access storage devices (DASD) and digital audio tape (DAT) systems. In one embodiment, a plurality of digital DASDs may be configured as an array of DASDs operating in accordance with a known RAID (Redundant Array of Inexpensive Disks) protocol. Analog versions of multimedia programs may be stored on one or more analog storage devices **39**, such as analog video tape systems and analog audio systems, for example. The mass storage library **40** may further include optical data storage systems or CD-ROM systems. It is to be understood that the mass storage library **40** may be configured with a variety of storage and processing devices covering a diverse range of technologies, and is not limited to those depicted in FIG. **4**. In one embodiment, for example, the mass storage library **40** includes one or more Dynamic Random Address Memory (DRAM) storage devices **37** employed for storing multimedia information in two-dimensional or three-dimensional storage array configurations. In accordance with one embodiment, one or more DRAM storage devices **37** are employed to provide mass storage of a plurality of popular or frequently requested multimedia programs. In accordance with a novel media server formatting architecture and methodology disclosed hereinbelow, a DRAM storage device **37** advantageously provides for fast access to popular multimedia programs and high-speed asynchronous transfer mode distribution of popular multimedia programs to a plurality of end-users.

In addition to pre-recorded or pre-produced multimedia programs, the mass storage library **40** preferably communicates with a number of external communication channels for receiving real-time broadcast signals representative of pro-

gramming made available over local, national, and international broadcast networks. Accordingly, a subscribing customer may request from a multiplicity of pre-produced and real-time multimedia programming selections.

In a preferred embodiment, multimedia programs stored in the mass storage library **40** are preferably initially converted from an analog format into a digital format, and then compressed or coded in accordance with an established coding algorithm. The compressed digital program segments are preferably structured in the form of a multiplexed program bitstream. A typical multiplexed bitstream comprises a video signal stream portion, an audio signal stream portion, and may further include other information signal stream portions. A multimedia program ordered by a subscribing customer is preferably transmitted to the customer location as a customized, multiplexed program bitstream representative of the selected multimedia program, preferably over an existing television channel, cable or optic television channel, digital or fiber optic telephone line, or satellite communication channel **44**, for example. The discrete source program segments that comprise the subscriber-selected multimedia program bitstreams are preferably transmitted as packets of segments in an asynchronous manner over the communication channel **44** to a plurality of target set-top control system **62**.

As illustrated in FIGS. **3–5**, an analog video signal, typically comprising a video signal portion and an audio signal portion, is preferably converted to a digital format and compressed by a coder **32** in accordance with an established coding algorithm. The compressed digitized program bitstream is then segmented or divided into a plurality of discrete video source program segments **48** by an index parser **33**. Each discrete compressed digital video segment **48** is preferably representative of a predetermined amount of non-compressed, full-motion video. In one embodiment, one second of non-compressed, full-motion video is represented by each of the compressed video segments **48**. In another embodiment, two seconds of non-compressed, full-motion video is represented by each of the compressed video segments **48**. It is to be understood that each of the source video segments **48** may be representative of a full-motion video portion greater than or less than one second. Alternatively, a varying duration of non-compressed, full-motion video may be represented by each of the compressed video segments **48**.

Referring now to FIG. **4** in greater detail, each of the mass storage devices **35**, **37**, and **39** may be coupled to a corresponding index parser **33**. Each of the index parsers **33**, in turn, are preferably coupled to a corresponding coder **32**. It is noted that the coders **32** illustrated in FIG. **4** are shown as being external to the mass storage library **40**. The coders **32** may alternatively be incorporated as internal components within the mass storage library **40**. In a preferred embodiment, the multimedia programs that are made available in the mass storage library **40** are processed through the coder **32** and index parser **33** only once, and then stored on a mass storage device **35**. An individual multimedia program may be stored on a single mass storage device, or, alternatively, stored across a plurality of mass storage devices. When processed by the index parser **33**, each of the compressed digital video segments **48** is preferably encoded with a unique segment address. A first video segment **48**, for example, may be encoded or tagged with an address identifier of "A1," while the second discrete video segment **48** may be encoded with an address of "A2." As such, each of the discrete source video segments **48** is preferably locatable within the storage device by reference to its unique address. An address table may be employed to provide mapping to physical storage locations associated with a particular virtual or indirect video segment address. Having indexed each of the video segments **48** with a unique address and stored the video segments on a mass storage device, such as a digital storage device **35**, reference to specific video segment **48** addresses provides an efficient means for organizing the video segments **48** in a customized manner, and transmitting the video segments **48** to a target set-top control system **62**.

As further illustrated in FIG. **4**, each of the mass storage devices provided in the mass storage library **40** is preferably coupled to one or more staging storage devices **41**. A significant advantage of the novel multimedia server **30** concerns the capability of organizing source video segments **48** in a customized manner for reception by a particular customer's set-top control system **62**. A plurality of staging devices **41** permits each storage device, such as digital storage device **35**, to concurrently service a plurality of customer requests and organize requested multimedia program in a customized manner. The staging devices **41** may comprise DRAM storage devices, an array of DASDs configured to operate as a RAID system, or other digital storage systems.

As mentioned previously, one or more analog storage devices **39** may be employed to store analog multimedia information. An analog multimedia program, when requested by a subscribing customer, is preferably transferred to the coder **32**, coded by the coder **32**, indexed in a manner previously discussed with respect to the index parser **33**, and preferably transmitted to a staging storage device **41**. It is noted that each of the storage devices **35**, **37**, and **39** may include a corresponding video parser **38** coupled between the storage device and a staging storage device **41**. It is to be understood that a single video parser **38** or single index parser **33** may be employed rather than individual parsing devices. Further, the staging devices **41** may be accessible to all of the mass storage devices, and that the distribution of work load between the components comprising the mass storage library **40** may be distributed amongst the various components to optimize the overhead of the multimedia server **30**. Further, analog and digital multimedia programming received over a local, national, or international broadcast channel **45** may be respectively directed to a coder **32** or directly to an index parser **33** for processing of real-time multimedia information.

In FIG. **5**, there is shown an illustration of a partial series **46** of sequentially ordered one-second compressed video segments **48** provided at the output of the coder **32**. It is noted that a sequentially ordered sequence or series of video segments **48** is representative of corresponding consecutively ordered full-motion video portions of a multimedia program. Conversely, a non-sequentially ordered sequence or series of video segments **48** is representative of a corresponding non-sequential or non-consecutively ordered full-motion video portion of a multimedia program. It is to be understood that all or only a portion of the video segments **48** representative of a multimedia program may be organized as a non-sequential series of video segments **48**. Further, it may be desirable to organize a predetermined number of video segments **48** as a non-sequential video segment **48** series portion of a multiplexed signal bitstream followed by or, alternatively, preceded by a sequential video segment **48** series portion. In other applications, it may be desireable to produce a multiplexed signal bitstream comprising only sequentially ordered compressed video segments **48**.

In a configuration employing an MPEG-1 coder **32**, for example, video compression ratios of approximately 100:1

are typically achievable. On average, one minute of full-motion video can be digitally compressed into approximately ten megabytes, corresponding to an average of approximately 5.6 kilobytes per video frame and approximately 0.167 megabytes per second of full-motion video program time at an NTSC (National Television Systems Committee) compliant display rate of thirty frames per second. It is noted that individual one-second compressed movie segments **48** typically vary in terms of size or number of bytes. On average, it has been determined that for an MPEG-1 coded video program, approximately 0.167 megabytes of memory is required to store each of the one-second compressed movie segments **48**. In order to store a two-second compressed movie segment **48**, for example, 0.334 megabytes of memory would generally be required.

In one embodiment, the coder **32** produces a compressed digital video bitstream of a type conforming to one or more of the MPEG coding standards. A typical video bitstream includes a sequence of discrete video information packs, with each pack including a layer header, a system header, a sequence of information carrying packets, and an end code demarcating the end of each discrete pack. The pack layer header generally contains a pack start code, or sync code, used for synchronization purposes, and a system clock value. The system header generally contains a variety of information, such as system stream identification information, which is used to differentiate the video pack data from other data incorporated into the multiplexed signal stream. Each of the information carrying packets defined within a pack typically contains either encoded audio or encoded video signal stream data. It is noted that the information carrying packets typically include a video packet header, while packets containing audio information typically include an audio packet header. Generally, video signal data corresponding to a plurality of video frames is contained within each video packet, while corresponding audio signal data is contained within an associated audio packet.

In one embodiment, the coder **32** digitally compresses the video and audio information corresponding to a predefined duration of full-motion video, such as one-second of motion video, into each video and corresponding audio pack. By way of example, a one-second portion of full-motion video conforming to an NTSC video format contains thirty frames of motion video. In this example, it will be assumed that each pack contains six video packets. Accordingly, one second of motion video may be represented by five packs, each of which contains six video packets. It is to be understood that the MPEG coding standard, as well as other coding standards, provide for an appreciable amount of flexibility when packetizing multimedia information in a compressed digital format.

Accordingly, the coder **32** preferably cooperates with the index parser **33** to produce a multiplexed signal bitstream at the output of the index parser **33** which includes a plurality of compressed video segments **48**, with each segment **48** representing a predefined duration of full-motion video. Additionally, the coder **32** and index parser **33** cooperate to generate a unique index address for each of the discrete video segments **48**. The unique address information may be incorporated into the pack layer header or system header portion of each pack or segment. As previously mentioned, the indexed sequential series of compressed video segments **48** is then preferably stored on a suitable mass storage device, such as the digital storage device **35** or DRAM storage device **37** illustrated in FIG. **4**. Since each of the discrete video segments **48** contains a unique index address, the video parser **38** effectuates efficient reorganization of a sequential series of stored, compressed video segments **48** into a custom ordered series of video segments **48** by referencing the unique address of specific video segments **48**.

A sequential series **46** of compressed digital video segments **48** provided at the output of the coder **32** is preferably transmitted to the input of an index parser **33**, as shown in FIG. **4**. A controller **34**, coupled to the coder **32** and video parser **38**, preferably coordinates the transfer of the compressed video segments **48** from the coder **32** and index parser **33** to a mass storage device **35** provided in the mass storage library **40**. The video parser **38** is preferably employed to perform various re-ordering operations on a sequential series **46** of compressed video segments **48** associated with a selected multimedia program stored on the mass storage device **35**. The video parser **38** operates to positionally translate particular discrete video segments **48** of a sequential video segment series **46** to produce a custom ordered series **54** of video segments **48**. The custom ordered video segment series **54** shown in FIG. **6**, for example, depicts the first thirty compressed video segments **48** of a customized video signal stream **54**, representative of the first thirty seconds of a two-hour movie, produced at the output of the video parser **38** for temporary storage on a staging storage device **41**. As will be described in greater detail hereinbelow, the manner in which the video parser **38** parses the video segments **48** to produce a customized video signal stream **54** is preferably dependent on a number of factors, including the storage capacity and functionality of a subscriber's local set-top control system **62** adapted to receive and process the customized video signal stream **54**, and the manner in which a subscribing customer desires to control the presentation of a requested multimedia program.

The controller **34** preferably controls the transfer of a customized video segment series **54** from the video parser **38** to a staging storage device **41** for temporary storage thereon prior to transmission to a distribution switch **42**. The distribution switch **42**, which is coupled to a communication channel **44**, is preferably an ATM (Asynchronous Transfer Mode) distribution switch which operates to asynchronously distribute packets, or packs in accordance with MPEG terminology, of video segments **48** concurrently to one or more customer set-top control systems **62** over the communication channel **44**. It is to be understood that one or more buffer memory devices (not shown) may be employed when synchronizing the transmission of video segments **48** comprising a multiplexed signal stream between the video parser **38** and the distribution switch **42**, and for synchronizing segment packet transmission between the distribution switch **42** and the communication channel **44**.

It is to be further understood that a customized video segment sequence **54** representative of a multimedia program may alternatively be stored on the mass storage device **35** to facilitate efficient transmission of one or more pre-processed, standard customized video signal streams **54** to customer set-top control systems **62** having a predefined storage capacity and control function capability. Use of such pre-processed customized video signal streams retrieved from the mass storage device **35** obviates repetitive parsing operations that would otherwise be performed by the video parser **38** to accommodate a particular set-top control system's unique configuration and presentation control functionality. Generally, the process of encoding a multimedia program requires significantly greater processing resources and a correspondingly greater processing cost as compared to decoding operations. Pre-processing or encoding multi-

media programs in a manner amenable to such standardized set-top control system **62** disproportionately shifts the processing overhead to the multimedia server **30**, as well as the concomitant processing costs which can be shared by the subscribing customers. It is noted that prior to transmitting a video program to a subscribing customer's set-top control system **62**, the subscriber's account status is preferably verified by a billing system **36** coupled to the controller **34** of the multimedia server **30**. After proper account verification is confirmed, the subscribing customer is granted authorization rights to receive multimedia programming from the multimedia server **30** preferably on a pay-per-view basis.

In FIGS. **7** and **8**, there are illustrated matrices of discrete compressed video segments **48** shown in row-column array formats. In one embodiment, an entire video program, such as a feature-length movie or theatrical performance, for example, is processed by the coder **32** and index parser **33** into a sequential series **46** of compressed video segments **48** which is subsequently organized by the video parser **38** into a matrix of rows and columns, as illustrated in FIGS. **7** and **8**. It is noted that various known matrix manipulation techniques may be employed by the video parser **38** when re-organizing the ordering of the video segments **48** representative of all or a portion of a multimedia program. Techniques other than those that employ matrix manipulation may also be utilized. In accordance with the embodiments illustrated in FIGS. **7** and **8**, the video parser **38** initially organizes a sequential series of discrete compressed video segments **48** into a matrix having 60 rows and N columns, where N is the number of minutes of total playing time for a particular video program, rounded upward.

For purposes of clarity and simplicity of explanation, the matrix illustrated in FIG. **7** is shown as containing all of the discrete compressed video segments **48** of a two-hour segmented movie, with each video segment **48** representing a one-second portion of non-compressed, full-motion video. A two-hour movie segmented into such one-second, full-motion video portions is thus represented by 7,200 discrete compressed video segments **48**. The 7,200 compressed movie segments **48** are preferably organized by the video parser **38** as a matrix of 60 rows and 120 columns. It is noted that the value of N for a two-hour movie is equal to 120 minutes, thereby accounting for the 120 columns of the matrix depicted in FIG. **7**. In one embodiment in which a multimedia program is to be transmitted exclusively as a sequential series of video segments **48** without a non-sequential series portion, as further illustrated by the matrix configuration illustrated in FIG. **7**, the video parser **38** preferably transmits the compressed video segments **48** sequentially arranged in the 60×120 matrix to the distribution switch **42** in a column-by-column manner. The video segments A**1** through A**7200** representing a two-hour movie **48** may then be transmitted in a sequential manner over the communication channel **44** to a subscribing customer's set-top control system **62**. A subscribing customer's set-top control system **62** preferably includes a moderate amount of local storage, typically on the order of 5 to 10 megabytes, for receiving the compressed sequential video signal stream **46** transmitted from the multimedia server **30**. Dynamic Random Access Memory (DRAM) or a DASD may be employed to buffer the 5 to 10 megabytes of the received compressed sequential video signal stream **46**.

In accordance with this embodiment the multimedia server **30** preferably communicates concurrently with a plurality of set-top control systems **62** over a communication channel **44**. A typical coaxial cable communication channel **44** transmits information signals at a data rate on the order of approximately 100 megabytes per second. Assuming that each of a plurality of set-top control system **62** includes approximately ten megabytes of internal memory, for example, the distribution switch **42** of the multimedia server **30** preferably asynchronously transmits approximately ten megabytes of multimedia program information each minute to some 600 subscribing customer locations. It is noted that a set-top control system **62** configured with a minimal amount of local memory is capable of receiving and processing the sequentially ordered compressed video signal stream **46** transmitted by the multimedia server **30**, but will typically lack sufficient local memory to provide a subscriber with VCR-type control over the presentation of the video program.

In accordance with two other embodiments, as illustrated in FIGS. **8** and **9**, the video parser **38** preferably arranges a sequential stream **46** of compressed video segments **48** received from a mass storage device **35** into a customized sequence of compressed video segments **48**. In FIG. **8**, there is illustrated a customized matrix of 7,200 compressed video segments **48** representing 7,200 discrete one-second full-motion video portions of a two-hour video program. In the embodiment illustrated in FIG. **8**, the video parser **38** organizes the 7,200 compressed video segments **48** into two sub-matrices **50 30** and **52** of odd and even address indices. Each of the two sub-matrices **50** and **52** is preferably arranged as a sub-matrix comprising ten rows and 360 columns (10×360). Each of the sub-matrices **50** and **52** thus contains 3,600 discrete video segments **48** of the total 7,200 segments **48** comprising the two-hour video program. The odd sub-matrix **50** and the even sub-matrix **52** are then concatenated along the first dimension (rows) to form a single customized matrix **51** of twenty rows by 360 columns (20×360). In response to a transmission control signal produced by the controller **34**, the video parser **38** preferably transmits the compressed video segments **48** arranged in the customized matrix **51** to a staging storage device **41** which, in turn, transmits the customized non-sequential video segments **48** to the distribution switch **42** in a column-by-column manner for subsequent transmission over the communication channel **44**.

For example, the video parser **38** preferably transmits the video segments **48** of the customized matrix **51**, shown in FIG. **8**, to the distribution switch **42** as the customized sequence of A**1**, A**3**, A**5**, A**7**, A**9** . . . A**19**; A**2**, A**4**, A**6**, A**8** . . . A**20**; A**21**, A**23**, A**25** . . . A**39**; A**22**, A**24**, A**26**, A**28** . . . A**40**; A**41**, A**43** . . . A**7200**. Each of the sub-matrices **50** and **52** defining the customized concatenated matrix **51** will hereinafter be respectively referred to as block **50** and block **52**. Preferably, each block **50** and **52** will exclusively contain video segments **48** having either even or odd address indices. It is noted that this preferred block organization is not necessarily required in order to realize the advantages of the novel multimedia server **30**. In the embodiment illustrated in FIG. **8**, the video segments **48** processed by the video parser **38** are subdivided into one odd block, Block-A **50**, and one even block, Block-B **52**, for a total of two such blocks. The total number of blocks within which the video segments **48** are organized will be referred to herein in connection with the Block Indexing Coefficient (BI) associated with the customized video segment matrix **51**. The customized matrix **51** of FIG. **8** includes two blocks of odd and even indices, and as such, represents a customized matrix **51** having a Block Indexing Coefficient of modulo-2. It is to be understood that the compressed video segments **48** may be organized into a plurality of odd and even blocks to define customized matrices **51** having Block Indexing Coefficients

in excess of modulo-2. Also, each block of a plurality of blocks may include a combination of odd and even video segment address indices.

As will be discussed in detail hereinbelow, the length of each segment block (L), measured in terms of video segments **48**, is an important formatting parameter. The segment block length (2) is a function of the size of an input buffer typically provided in a subscribing customer's set-top control system **62** for the purpose of buffering packets of video segments **48** received from the multimedia server **30**. The organization of each of the blocks **50** and **52** formatted as shown in FIG. **8**, for example, would generally correspond to a maximum block length of ten video segments **48**, and a maximum packet size of ten video segments **48**. As such, the input buffer of a customer's set-top control system **62** would typically be configured to store at least ten video segments **48**. By way of further example, the organization of each of the blocks **53**, **55**, **57**, and **59** formatted as shown in FIG. **9** would correspond generally to a maximum block length of five video segments **48**, and a maximum packet size of five video segments **48**. As such, the input buffer of a customer's set-top control system **62** would typically be configured to store at least five video segments **48**. It is noted that the average size of the discrete video segments **48** must be considered when determining the adequacy of the input buffer **66** storage capacity. Each of the video segments **48** shown in FIG. **8**, for example, represents a one-second portion of full-motion video, while each of the video segments **48** shown in FIG. **9**, for purposes of illustration, represents a two-second portion of full-motion video.

Generally, the input buffer **66** should be configured to store at least twice the number of video segments contained in the largest video segment packet transmitted by the multimedia server **30**. The additional input buffer **66** storage capacity provides for enhanced synchronization of video segments **48** being processed through the input buffer **66**, and provides the multimedia server **30** with additional flexibility when asynchronously distributing video segment packets to a plurality of customer set-top control systems **62**. It may be advantageously efficient, for example, for the multimedia server **30** to transmit two packets during a single transmission window to a particular set-top control system **62** to reduce server **30** processing overhead during periods of peak utilization.

Referring now to FIG. **9**, there is illustrated a customized matrix **51** having a Block Indexing Coefficient of modulo-4 and comprising four blocks **53**, **55**, **57**, and **59** of compressed two-second video segments **48** having alternating odd and even address indices. In the embodiment of FIG. **9**, the two-hour video program segmented by the coder **32** and the index parser **33** has been organized by the video parser **38** into four blocks, Block-A **53**, Block-B **55**, Block-C **57**, and Block-D **59**. In response to a transmission control signal produced by the controller **34**, the compressed video segments **48** arranged in the four blocks **53**, **55**, **57**, and **59** are read out of the video parser **38** in a column-by-column manner and transferred to a staging storage device **41** for subsequent transmission over the communication channel **44** by the distribution switch **42**. In accordance with one formatting scheme, the video parser **38** preferably transmits the video segments **48** of the customized matrix **51** to the staging storage device **41** as the customized sequence of A1, A5, A9, A13, A17; A2, A6, A10, A14, A18; A3, A7, A11, A15, A19; A4, A8, A12, A16, A20; . . . A3600. It can be seen that the ordering of the video segments **48** comprising a customized video signal stream **54** becomes more asynchronous or non-sequential as the Block Indexing Coefficient of the customized matrix **51** increases. As will be described in detail hereinbelow, the organization of the video segments **48** comprising a customized video signal stream **54** is preferably governed by general asynchronous formatting equations and guidelines that have been developed by the inventors. These formatting equations and guidelines are preferably employed by the multimedia server **30** to optimally organize a segmented multimedia program in response to various performance and functional characteristics of each unique set-top control system **62** adapted to receive the multimedia program transmission from the multimedia server **30**.

In general, a customized video signal stream **54** preferably includes an initial asynchronous or non-sequential video segment **48** portion followed by a synchronous or sequential video segment **48** portion. More particularly, an introductory portion of a selected multimedia program signal stream preferably includes a plurality of non-sequentially ordered video segments **48**, while the remaining portion preferably includes a plurality of sequentially ordered video segments **48**. In a preferred embodiment, the duration of the introductory non-sequential portion of the multimedia program signal stream corresponds to the duration of the multimedia program that is to be buffered on the subscriber's set-top control system **62**, and is preferably the portion of the multimedia program over which a customer has full local VCR-type presentation control. Further, as will be discussed in detail hereinbelow, the asynchronous portion of the multimedia program is concurrently buffered on the customer's set-top control system **62** while being processed for immediate display on an attached television **24** or monitor, thereby providing a subscribing customer with true on-demand viewing of a selected multimedia program. It is to be understood that a customized video signal stream may comprise only asynchronously ordered video segments **48**, combined synchronous and asynchronous video segment **48** portions, or exclusively synchronously ordered video segments **48**.

In accordance with the embodiments illustrated in FIGS. **8** and **9**, a set-top control system **62** adapted to receive a customized video signal stream **54** transmission from the multimedia server **30** must generally include sufficient memory to buffer all or at least a portion of the video signal stream **54** and include means for reorganizing the asynchronous video stream portion into a sequentially ordered video signal stream **46** in order to properly display the multimedia program in accordance with its original temporal organization. It is important to note that cooperative operation between the multimedia server **30** and a set-top control system **62** provides for a media-on-demand communication system capable of concurrently servicing a plurality of subscribing customers, with each customer having full local VCR-type control over the presentation of a portion of the multimedia program or, if desired, the entire multimedia program. It is further noted that the novel parsing or formatting of a segmented multimedia program by the video parser **38** and concurrent asynchronous transmission of one or more multimedia programs by the distribution switch **42** provides for a dramatic reduction in communication channel **44** bandwidth and multimedia server **30** processing overhead in comparison to conventional video communication systems. By transmitting each of the compressed video segments **48** generally only once, repetitive transmission of video segments **48** over the communication channel **44** that would otherwise be required to provide local VCR-type control over the media presentation is altogether avoided.

The distribution switch **42** preferably transmits a plurality of selected multimedia programs concurrently to a plurality

of set-top control systems **62**. In order to effectuate high-speed, high-volume multimedia program transmission, the distribution switch **42** preferably employs an Asynchronous Transfer Mode (ATM) switching methodology. Generally, ATM is a cell-based switching and multiplexing methodology designed to be a general-purpose, connection-oriented transfer mode for a wide range of communication services. ATM is widely utilized for effectuating communication over local area networks (LANs) and private networks.

ATM handles both connection-oriented traffic and connectionless traffic through the use of adaptation layers. ATM virtual connections may operate at either a constant bit rate (CBR) or a variable bit rate (VBR). Each ATM cell transmitted over a communication channel **44** contains addressing information that establishes a virtual connection from origination to destination. All cells are then transferred, in order, over this virtual connection. ATM provides bandwidth-on-demand, and also supports LAN-like access to available bandwidth. ATM is asynchronous because the transmitted cells need not be periodic as time slots of data are in accordance with known Synchronous Transfer Mode (STM) methodologies.

The primary ATM information unit is the cell. ATM standards define a fixed-size cell with a length of 53 octets (or bytes) comprised of a 5-octet header portion and a 48-octet payload portion. The bits in the cells are transmitted over the transmission path **44** in a continuous stream. Cells are mapped into a physical transmission path, such as the North American Digital Signal Level **1** (DS1), DS3, or SONET, International Telecommunications Union—Telecommunications standardization sector (ITU-T) STM standards, and various other local fiber and electrical transmission systems.

All information is switched and multiplexed in an ATM distribution network typically by using these fixed-length cells. The cell header identifies the destination, such as a subscriber's set-top control system **62**, cell type, and priority. Fields of the cell header include the virtual path identifier (VPI) and virtual circuit identifier (VCI) which identify the destination. The generic flow control (GFC) field allows a multiplexer, such as the distribution switch **42**, to control the rate of cell transmission. The payload type (PT) indicates whether the cell contains user data, signaling data, or maintenance information. The cell loss priority (CLP) bit indicates the relative priority of the cell. It is noted that higher priority cells are granted preferred processing status over lower priority cells during congested intervals.

Each cell typically includes a header error check (HEC) which detects and corrects errors in the header. The payload field is passed through the network intact, generally without undergoing error checking or correction. ATM relies on higher layer protocols to perform error checking and correction on the payload portion. The fixed cell size simplifies the implementation of ATM switches and multiplexers while providing very high speeds. When using ATM, longer packets cannot delay shorter packets as in other switching implementations because long packets are segmented into many cells. This enables ATM to carry constant bit rate (CBR) traffic together with variable bit rate (VBR) data traffic.

As will be appreciated by those skilled in the art, an ATM communication network suitable for communicating a plurality of multimedia programs from a multimedia server **30** concurrently to a plurality of set-top control systems **62** preferably conforms to the Open Systems Interconnection (OSI) model. The OSI model defines seven layers, including an application, presentation, session, transport, network, link, and physical layer, for describing the operations of an OSI communication network. The OSI model was developed by the International Organization for Standardization (ISO) and is described in "The Basics Book of OSI and Network Management" by Motorola Codex from Addison-Wesley Publishing Company, Inc., 1993 (First Printing September 1992). In one embodiment, the distribution architecture and method for distributing multimedia information from the multimedia server **30** to a plurality of distantly located set-top control systems **62** preferably conforms to one or more of the OSI communication models.

In accordance with one embodiment, the distribution switch **42**, illustrated in FIGS. **3** and **4**, preferably transmits each packet of discrete video segments **48** to a target set-top control system **62** within a predetermined transmission window, the duration of which is preferably determined by the configuration and functional attributes of a particular customer's set-top control system **62**. The customized non-sequential series of video segments **48** illustrated in FIG. **6**, for example, represents a video segment series portion exhibiting a relatively modest degree of asynchronous organization. For this example, each video segment packet transmitted by the distribution switch **42** over the communication channel **44** preferably contains two video segments **48**, one of which has an odd address index, such as A**1**, and the other of which has an even address index, such as A**2**. Accordingly, an input buffer provided in a customer's set-top control system **62** would be configured to store at least two video segments **48**. Assuming that each of the two video segments **48** buffered in the input buffer contain a one-second portion of motion video, the input buffer would be emptied after two seconds, which corresponds to the time required to display the two one-second video segments **48**.

In order to provide uninterrupted presentation of the multimedia program, the next packet containing another two one-second video segments **48** would have to be transmitted by the distribution switch **42** and received by the set-top control system **62** within a two second transmission window. Accordingly, after the second video segment **48** of a particular video packet is being read out of the input buffer, the first and second video segments of the subsequently received video packet is preferably read into the input buffer. It is noted that the input buffer is preferably configured to store in excess of the minimum required capacity to provide for increased multimedia server **30** transmission flexibility and enhanced input buffer processing synchronization. In this example, an input buffer configured to store three or four video segments **48**, rather than the required minimum of two video segments **48**, is preferred. Alternatively, an overflow buffer or transfer buffer could also be employed in cooperation with the input buffer to facilitate efficient synchronization.

By way of further example, a customized non-sequential series of video segments **48** read out of the customized matrix **51** illustrated in FIG. **9** represents a video segment series portion exhibiting a relatively moderate degree of asynchronous organization. For this example, as further illustrated in FIG. **10**, each video segment packet transmitted by the distribution switch **42** over the communication channel **44** preferably contains at least five video segments **48**. After the first four packets have been transmitted, each of the packets for this example would contain only four video segments **48**. As such, the input buffer provided in a customer's set-top control system **62** would be configured to store at least five video segments **48**. Assuming that each of the five video segments **48** buffered in the input buffer represents a two-second portion of motion video, the input

buffer would be emptied after ten seconds of equivalent viewing time for the first four packet transmissions, and would be emptied after eight seconds of equivalent viewing time for subsequently transmitted video segment packets.

In order to provide uninterrupted presentation of the multimedia program for this example, Packets **2** through **5** would have to be transmitted by the distribution switch **42** and received by the set-top control system **62** within a ten second transmission window. The transmission of the packets following Packet **5** would have to be transmitted by the distribution switch **42** and received by the set-top control system **62** within an eight second transmission window. It is considered desirable for purposes of simplicity that the number of video segments **48** contained within each packet be an integral multiple of a one-second video segment **48**. It is noted that information packets unrelated to the instant multimedia program selection may also be transmitted to a customer's set-top control system **62** from the multimedia server **30**. The packets containing the unrelated information, such as a message indicating that a video conferencing call has been received or reception of some other unrelated data, may be interleaved with the video segment packets and transmitted within an appropriate transmission window. Further, the unrelated information may be interleaved between discrete video segments **48** contained within a video segment packet.

Conventional coaxial transmissions cables are generally capable of supporting burst transmission rates on the order of 100 MB/sec. Fiber optic transmission lines, in contrast, can be employed to support burst transmission rates on the order of gigabytes per second. Accordingly, transmission window durations on the order of several seconds can easily be accommodated using existing coaxial and fiber optic communication networks. It is readily apparent to those skilled in the art that various known asynchronous transmission mode distribution techniques are well-suited for distributing video segment packets asynchronously during successive transmission windows or transmission time slots over a relatively high burst rate communication channel.

The service costs associated with receiving on-demand multimedia programs on a pay-per-view basis preferably vary depending on the formatting of the source program signal stream transmitted from the multimedia server **30**. In general, a subscribing customer's service costs decrease as the video segment packet size transmitted by the multimedia server **30** increases. Video segment packets containing two one-segment video segments **48**, for example, must be transmitted within a relatively short transmission window of approximately two seconds. The multimedia server **30** must, therefore, transmit video packets on a frequent basis. In contrast, a source multimedia program formatted such that four or five video segments **48** are contained within each video segment packet, for example requires significantly fewer packet transmissions, with each transmission being accomplished within a significantly longer transmission window of approximately ten and eight seconds, respectively. Although increasing the size of the input buffer generally increases the cost of the set-top control system **62**, the amortized cost of receiving on-demand multimedia programming over time is reduced due to the ability to buffer larger video segment packets.

Intelligent Set-Top Control System

Referring now to FIG. **11**, there is illustrated a system block diagram of a novel intelligent set-top control system **62** adapted for communicating with a remote multimedia server **30** preferably of the type described hereinabove. In accordance with one embodiment, a relatively low-cost set-top control system **62** configuration includes a moderate amount of local memory, preferably on the order of 5 to 10 megabytes, for receiving a coded video signal stream **46** comprised of sequentially ordered discrete video segments **48** transmitted from the multimedia server **30** over a communication channel **44**. The set-top control system **62** preferably includes a set-top controller **64** that communicates with an input buffer **66**, output buffer **72**, and a decoder **74** to coordinate decoding of the received coded video signal stream **46** for presentation on a local monitor or television **76**. As previously discussed, the relatively small storage capacity of the input buffer **66** of the low-cost set-top control system **62** will generally require relatively frequent packet transmissions for the multimedia server **30**, thereby resulting in higher service costs in comparison to set-top control systems employing large storage capacity input buffers **66**.

In a preferred embodiment, the set-top control system **62** preferably includes a novel multimedia direct access storage device (DASD) **68** adapted to buffer compressed video segments **48** representative of a portion or all of a multimedia program received from a communication channel **44** in accordance with a novel formatting methodology disclosed hereinbelow. An important feature afforded a subscribing customer when employing a set-top control system **62** in accordance with this embodiment concerns the capability to effectuate full local VCR-type control over the presentation of a portion of a selected multimedia program on a real-time basis. Full VCR-type control over the presentation of the entire multimedia program may also be realizable provided a sufficient amount of DASD **68** storage capacity is allocated for this purpose.

The amount of available DASD **68** storage capacity generally impacts the degree to which a subscribing customer can effectuate VCR-type control over the presentation of a selected multimedia program. As illustrated in FIG. **12**, a subscriber preferably controls the presentation of a portion of a multimedia program defined within a virtual presentation control window **90**. The functionality of the virtual presentation control window **90** is facilitated by a novel asynchronous formatting methodology and storage architecture associated with the multimedia DASD **68**. The presentation control window **90** depicted in the embodiment illustrated in FIG. **12**, for example, is shown as encompassing a thirty minute portion of a two-hour (120 minute) movie. The portion of the movie represented within the presentation control window **90** is locally manipulatable by the subscriber. The subscriber, for example, may progress through the movie portion defined within the presentation control window **90** in a forward and a reverse temporal direction, and may also pause the presentation of the movie.

The presentation control window **90** preferably advances in time as the movie is being presented. In this regard, the virtual presentation control window **90** may be viewed as a temporally translatable buffer. The presentation control window **90** preferably comprises a forward window portion **93** and a reverse window portion **91** defined respectively on either side of a current viewing time reference **95**. At a current viewing time of sixty minutes into a two-hour movie, for example, the forward window portion **93** of the thirty minute presentation control window **90** provides control over the succeeding fifteen minutes (minutes sixty through seventy-five) of the movie with respect to the current viewing time reference **95**, while the reverse window portion **91** provides control over the preceding fifteen minutes (minutes forty-five through sixty) with respect to the current viewing time reference **95**.

The thirty minute presentation control window **90** is translated in either a forward or reverse temporal direction in accordance with the forward and reverse progression of the current viewing time reference **95**. As such, for current viewing time references **95** within the two-hour movie in excess of fifteen minutes and less than 105 minutes, a viewer may progress forward or backward through a maximum of fifteen minutes in either temporal direction with respect to the current time reference **95**. The time increments associated with progressing in a forward or reverse temporal direction within the presentation control window **90** are typically determined by a number of factors, including the storage capacity of the DASD **68** and the number of disk surfaces and disk surface portions or blocks allocated for supporting the presentation control window **90**, the size of the input buffer **66** of the set-top control system **62**, the size of each discrete video segment **48**, and the size of each video segment packet. As long as the viewer operates within the thirty minute presentation control window **90**, each of the 7,200 compressed video segments **48** comprising the two-hour movie is transmitted only once from the multimedia server **30** to the subscriber's set-top control system **62**. Moving outside of the presentation control window will generally require re-transmission of previously transmitted compressed video segments **48**. Such incidents of re-transmission preferably result in additional costs being charged to the subscriber's account.

With further reference to FIG. **11**, the set-top controller **64** of the set-top control system **62** preferably communicates with a remote multimedia server **30** over a communication channel **44**, and coordinates the operation of the set-top control system **62**. Media-on-demand data is generally transmitted from the multimedia server **30** to the set-top control system **62** over the communication channel **44** at a very high burst data rate, typically on the order of 100 megabytes per second (MB/sec) for a conventional coaxial transmission cable. The set-top controller **64** preferably communicates with other components of the set-top control system **62** to coordinate the reception, storage, and decoding of compressed video segments **48** received from the multimedia server **30**, and the presentation of the decoded video segments **48** on a subscribing customer's television **76**. The set-top controller **64** preferably communicates control signals to the multimedia server **30** over a server control line or channel **78** of the communication channel **44** to initiate transmission of a pay-per-view multimedia program and to regulate the rate at which the compressed video signal stream is received from the multimedia server **30** over the data channel **75** to avoid an input buffer **66** overflow condition.

During the presentation of a multimedia program, for example, the viewer may temporarily stop the presentation of a program by communicating a pause command to the set-top control system **62**, typically by use of an IR remote control handset **25**. During the pause mode, a control signal is preferably issued by the set-top controller **64** to the multimedia server **30** over the server control line **78** to request temporary halting of source video signal stream transmission, thus causing the translatable presentation control window **90** to temporarily remain stationary. The set-top controller **64** preferably issues a resume control command over the server control line **78** when requesting the multimedia server **30** to resume transmission of the source video signal stream. By way of further example, a subscribing customer may view portions of the multimedia program outside of the presentation control window **90** by selectively activating a forward or reverse control button disposed on the IR remote control handset **25**. In accordance with a novel multimedia DASD **68** video signal stream buffering methodology, only the compressed video segments **48** corresponding to portions of the multimedia program defined within the presentation control window **90** are locally stored in the DASD **68**. Thus, moving beyond the presentation control window portions **93** and **91** generally requires re-transmission of video segments **48** corresponding to portions of the movie outside of the presentation control window **90**.

The set-top control system **62** preferably includes an annunciator that alerts a subscriber to a condition in which a forward or reverse control request issued from the IR remote control handset **25** can not be satisfied within the currently defined presentation control window **90**. The annunciator also preferably alerts the subscriber that satisfying the request will require additional video data from the multimedia server **30** and result in an associated charge to the subscriber's account. A subscriber may initiate transmission of the additional video data preferably by activating a combination of control buttons in order to ensure that the subscriber intends to incur the additional expense.

As the set-top controller **64** receives compressed video segments **48** from the communication channel **44**, typically in the form of segment packets, the controller **64** coordinates the transfer of the segments **48** to an input buffer **66**. The set-top controller **64** communicates control signals to the input buffer **66**, DASD **68**, output buffer **72**, decoder **74**, and multimedia server **30** to regulate timing and data transmission within the set-top control system **62** respectively over control lines **80**, **82**, **86**, **88**, and **78**. The operation of the transfer buffer **70** is also controlled by the set-top controller **64** over control line **84**. The transfer buffer **70** may be used for an number of purposes, including receiving video segments **48** from the input buffer **66** in response to an input buffer overflow condition, temporarily buffering video segments being transferred into and out of the DASD **68** to enhance synchronization, and to buffer information packets and other data unrelated to the video segment **48** data prior to being stored on or read from the DASD **68**. Transferring of such non-related data to and from the DASD **68** is preferably accomplished during periods of low DASD **68** utilization, such as during a pause mode or other period of low DASD **68** usage.

In one embodiment associated with a relatively low-cost set-top control system **62**, the size of the input buffer **66** is preferably sufficient to accommodate at least two one-second compressed video segments **48**. As previously discussed, one second of full-motion video corresponds on average to an MPEG-1 compressed video segment **48** of approximately 0.167 MB in size. Accordingly, 0.333 MB of input buffer **66** storage capacity is required to accommodate two one-second compressed video segments **48**. Data from the input buffer **66** is then transmitted to the DASD **68** preferably at a burst data rate of approximately 5 MB/sec and stored therein in a novel manner that provides full local VCR-type control of the multimedia program presentation. The size of the input buffer may be configured to store in excess of two video segments **48**, and may comprise several megabytes of memory. An input buffer **66** configured to store fifteen one-second MPEG-1 compressed video segments **48** would, for example, require approximately 2.5 MB of memory.

Immediate viewing of a requested multimedia program is facilitated by the concurrent transferring of video data from the input buffer **66** to both the DASD **68** and the output buffer **72**. Compressed video segments **48** transmitted from

the DASD **68** or the transfer buffer **70** are received in sequential order by the output buffer **72**. The output buffer **72** preferably stores a predetermined number of compressed video data and ensures that a prescribed input video data rate to the decoder **74** is maintained. Each of the sequential compressed video segments **48** received by the output buffer **72** is then decoded by the decoder **74**, and transmitted to a subscriber's television or video monitor **76** at the required frame rate, typically **30** frames per second for an NTSC formatted video signal, or 25 frames per second for a PAL (Phase Altering Line) formatted video signal. In a preferred embodiment, the decoder **74** is configured to decode a compressed MPEG video bitstream. The output buffer **72**, for example, preferably transfers an MPEG-1 video bitstream to the input of an MPEG-1 decoder **74** at a rate of approximately 0.2 MB/sec, thus ensuring that the decoder **74** transmits a corresponding decoded video signal to the subscriber's television **76** at a data rate of approximately 20 MB/sec. The output buffer **72** is preferably configured to buffer at least two compressed video segments **48**. As such, two one-second compressed video segments **48** would require approximately 0.334 MB of output buffer **72** storage, for example, while two three-second compressed video segments **48** would require approximately 1.0 MB of output buffer **72** memory.

In one embodiment, each set-top control system **62** is identified by a unique serial number. This serial number is preferably used as an identification address when routing video data from the multimedia server **30** to the set-top control system **68** of the subscribing customer who placed the pay-per-view order. As discussed previously hereinabove, an ATM information cell typically includes a cell header that identifies the destination of the cell and its associated information payload. The unique serial number or other type of unique identifier may be incorporated into the cell header to facilitate proper routing of cells, which can be viewed as equivalent to or incorporating the discrete packets of video segments **48** transmitted to a particular subscriber's set-top control system **62**.

Multimedia Direct Access Storage Device (DASD)

Turning now to FIGS. **13** and **14**, there is illustrated a novel multimedia DASD **68** adapted for use in a set-top control system **62** preferably of the type previously disclosed. The multimedia DASD **68** preferably includes one or more rigid data storage disks **108** which are stacked coaxially in a tandem spaced relationship and rotated about a hub of a spindle motor **114**. An actuator **118** typically includes one or more outwardly extending actuator arms **112**, with each arm having one or more transducer/slider assemblies **116** mounted thereto for writing and reading information to and from the data storage disks **108**. The transducer/slider assembly **116** is typically designed as an aerodynamic lifting body that lifts the transducer off of the surface of the disk **108** as the rate of spindle motor **114** and disk **108** rotation increases, thus causing the transducer/slider assembly **116** to hover above the disk **108** on an air bearing produced by the disk **108** rotation. For a DASD **68** configuration employing a constant contact transducer/slider assembly **116** arrangement, a conformal lubricant is preferably disposed on the disk surface **108** to reduce static and dynamic friction between the transducer/slider assembly **116** and the disk surface **24**.

The actuator **118** is usually mounted to a stationary actuator shaft **122**, and rotates on the shaft **122** to move the actuator arms **112** into and out of the stack of data storage disks **108**. A coil assembly **123**, mounted to the actuator **118**, generally interacts with a permanent magnet structure **120**, causing the actuator arms **112**, in turn, to sweep over the surface of the data storage disks **108**. The spindle motor **114** typically includes a poly-phase a.c. motor or, alternatively, a brushless d.c. motor adapted for rotating the data storage disks **108**.

The coil assembly **123** and the permanent magnet structure **120** operate in cooperation as an actuator voice coil motor responsive to control signals produced by a DASD controller **67** typically mounted on a circuit card **124**. Various other electronic modules for controlling the operation of the multimedia DASD **68** and for communicating with other devices, such as a DASD array controller or communication channel **44** interface, for example, are also typically mounted to the circuit card **124**. The actuator voice coil motor produces a torquing force on the actuator coil assembly **123** when control currents of varying direction and magnitude flow in the coil assembly **123** in the presence of a magnetic field produced by the permanent magnet structure **120**. The torquing forces imparted on the actuator coil assembly **123**, in turn, cause corresponding rotational movement of the actuator arms **112** in directions dependent on the polarity of the control currents flowing in the coil assembly **123**. The DASD controller **67** preferably includes control circuity to coordinate the transfer of data to and from the data storage disks **108**, and cooperates with the actuator voice coil motor to move the actuator arms **112** and transducer/slider assemblies **116** to prescribed locations on the disk **108** when writing and reading data to and from the disks **108**.

Referring now to the embodiment illustrated in FIGS. **15** and **16**, video data transferred from the set-top controller **64** to the multimedia DASD **68** is preferably stored on both the upper surface **102**, shown in FIG. **15**, and lower surface **104**, shown in FIG. **16**, of the data storage disks **108**. Upper and lower transducer/slider assemblies **116** and **117** are preferably provided for respectively writing and reading data to and from each of the upper and lower disk surfaces **102** and **104**. It is noted that the number of data storage disks **108** may vary, and that it is not generally essential to utilize both disk surfaces **102** and **104** for purposes of storing the video data. Further, only a portion of a disk's data band may be allocated for purposes of storing video segment information, while reserving other portions of the data band for storing other types of information. Also, several non-contiguous portions of the data band may be utilized for storing video data.

With further reference to FIGS. **15** and **16**, there is shown in greater detail a preferred orientation of the data tracks disposed on the upper and lower disk surfaces **102** and **104**, respectively. FIG. **15** depicts the upper surface **102** of the disk **108** as viewed from above, while FIG. **16** depicts the lower surface **104** of the disk **108** as viewed from below. For clarity of orientation with respect to FIGS. **15** and **16**, the direction of disk rotation is indicated by the arrows, and the actuator arms **112** are shown outlined against the respective disk surfaces **102** and **104**. In a preferred embodiment, the data tracks of the upper and lower disk surfaces **102** and **104** respectively include spiral data tracks **111** and **110** for storing video information and other data. As discussed previously, the advantages of the novel media-on-demand communication system described herein are addressed with general reference to a video program for purposes of explanation, and not of limitation. Accordingly, the preferred spiral data track configuration illustrated in FIGS. **15** and **16** may be employed to store audio, textual, graphical, image, animation, and combinations of these and other types of multimedia information.

The spiral data track **110** disposed on the lower surface **104** of the disk **108** preferably contains a sequence of data storing blocks originating near the outer edge **105** of the disk **108** and spiraling inwardly toward the inner edge **107** of the disk **108**. A spiral data track **111** disposed on the upper surface **102** of the disk **108** preferably contains a sequence of data storing blocks originating near the inner edge **107** of the disk **108** and spiraling outwardly toward the outer edge **105** of the disk **108**. It is to be understood that only a portion of the data band may be formatted to include spiral data tracks, and that this spiral formatted portion may be situated at any radial location on the disk surface. It may be advantageous in other configurations to allocate the entire data band for the purpose of storing multimedia data in spiral data tracks. The portion of a data band formatted to include spiral data tracks for storing multimedia data will hereinafter be defined as the data band portion disposed between an inner spiral diameter location (ISDL) and an outer spiral diameter location (OSDL) on a surface of a data disk **108**.

Data tracks **110** and **111** additionally contain a plurality of servo sectors interleaved with the data storing blocks to enable the DASD controller **67** to identify track location and to follow the centerline of the data track. It is noted that various known methods for effectuating data track following using embedded servo sectors are known in the art. It is further noted that only portions of the data tracks **111** and **110** are depicted in FIGS. **15** and **16**, and that the tracks are exaggerated in size and configuration for illustrative purposes. It should be understood that a pair of recording data surfaces having oppositely spiraled data tracks need not necessarily be located on opposite sides of the same disk **108**. In an alternative configuration, both surfaces of one disk may be formatted with inwardly spiraling data tracks, while both surfaces of another disk may be formatted with outwardly spiraling data tracks.

An important advantage of the spiral data track configuration illustrated in FIGS. **15** and **16** concerns the obviation of the need to perform rapid seek operations, primarily because the video data is formatted in long spiralled data tracks. The novel multimedia DASD **68** normally operates by writing and reading video data progressively along a predefined length of the spiral tracks from beginning to end. As such, the actuator voice coil motor need not perform rapid seek operations typically associated with data storage disks **108** formatted with a plurality of concentric data tracks in accordance with a conventional data storing configuration. Accordingly, the actuator voice coil motor of a novel multimedia DASD **6** is generally considerably smaller than that of a conventional DASD, thereby reducing the cost, weight, and power consumption of the multimedia DASD **68**. Improved tracking is also realizable due a substantial reduction in the amount of mechanical vibration and undesirable resonance resulting primarily from the elimination of rapid seek operations.

Further, a conventional DASD employs a spindle motor **114** that is designed to rotate one or more data storage disks **108** at a high rate of speed in order to minimize latency time when accessing data. Latency time is generally understood as a period of delay associated with the amount of time required to rotate a specific data storage area on the disk surface into proximity with a read/write transducer. A spindle motor of a conventional DASD employing 3.5" data storage disks **108**, for example, typically rotates the disks at a rate of approximately 5,400 to 7,200 RPM, and represents a major power consuming component of the conventional DASD. In accordance with one embodiment, the spindle motor **114** of the multimedia DASD **68** rotates the disks **108** at nominal rotational rates of 3,600 RPM or lower. Accordingly, a substantial reduction in the size, power consumption, cost, and complexity of a multimedia DASD **68** adapted for providing full VCR-type control over the presentation of a requested multimedia program is realizable.

It is noted that presentation control windows **90** of longer duration will generally require higher disk **108** rotation rates, as indicated by the formatting equations and guidelines developed by the inventors and disclosed hereinbelow. For a relatively low-cost DASD **68**, it may be desirable to design the spindle motor **114** to operate at a fixed speed, such as 3,600 RPM, for example. For other configurations employing an air bearing to support the transducer/slider assembly **116**, it may be desirable to rotate the disk **108** at a rotational rate sufficient to ensure that a nominal disk-to-transducer clearance distance is maintained on the air bearing. The particular aerodynamic characteristics of the transducer/slider assembly **116** will, of course, become an important factor in determining the nominal flying height of the transducer/slider assembly **116** above the rotating disk **108** and the corresponding desired spindle motor **114** rotation rate. In an embodiment cf the multimedia DASD **68** that employs a lubricant-based system for reducing static and dynamic friction between the disk surface **108** and a constant contact-type transducer/slider assembly **116**, disk velocities significantly lower than 1,200 RPM may be advantageous for reducing the size, cost, and power demands of the DASD **68**. A load/unload ramp **117** is generally employed to unload the transducer/slider assembly **116** from the lubricated disk surface during periods of extended non-use.

For example, disk **108** rotational rates at or near zero velocity may be desirable during a pause presentation mode. Also, the rotational rate of the spindle motor **114** and disks **108** may be varied depending on the type of multimedia information being buffered by the DASD **68**.In such a case, the nominal rate of disk **108** rotation may be determined by the DASD controller **67** or by the set-top controller **64**. It is noted that the nominal disk **108** rotation rate may be selected from a range of suitable rotation rates which are typically dictated by the flying characteristics of the particular transducer/slider assembly **116** employed. Also, the optimal portion of the disk data band allocated for storing the video data may be determined by the DASD controller **67**. Depending on the particular transducer/slider assembly **116** flying characteristics, the optimal data band location may be situated at an outer diameter disk location, an inner diameter disk location, or an intermediate diameter disk location. It is noted that a nominal disk **108** rotation rate should be appropriately selected to ensure that the output buffer **72** and decoder **74** are provided with a sufficient rate of video data input to assure uninterrupted presentation of the multimedia information. It is further noted that lower disk **108** rotational rates generally correspond to lower sampling rates of the servo information typically embedded between information storing sectors on the surface of the disk **108**. As such, a nominal spindle motor **114** rotation rate should be selected to provide a sufficiently high servo information sampling rate.

Another important advantage of the preferred spiral data track configuration illustrated in FIGS. **15** and **16** concerns a significant increase in the linear bit density of a data storage disk **108**. The spiral data tracks **110** and **111** are typically narrower than conventional concentric data tracks, thus affording a significant increase in track density for each surface of the disk **108**. In a conventional DASD, for

example, the width of a data track becomes a limiting factor on the seek time of the DASD. When the actuator performs a seek to locate a new track, it must generally decelerate and settle to a position in which it is following the centerline of the data track. Generally, a longer period of time is required for the actuator to settle at the end of a seek operation for narrower track widths, thereby increasing the overall seek time of the DASD. In accordance with a preferred spiral data track configuration of the novel multimedia DASD **68**, no such seek operations are performed, and, as a result, the time required for the actuator **112** to settle is no longer a significant factor that might otherwise limit the degree to which the track width can be reduced.

Another reason increased data density is realizable when storing multimedia data on the disk **108** of a multimedia DASD **68** concerns the relatively low data error rate associated with multimedia data as contrasted to conventionally stored digital data. It is well-understood that even slight alterations to conventional digital data resulting from soft and hard read errors can have adverse results of varying severity. In the case of multimedia data, however, read error rates on the order of several magnitudes higher than those allowable for conventional data are generally acceptable. In many multimedia applications, for example, audio and video information must generally be transferred from the data storage disk **108** to the viewers television **24** or monitor. In general, a read error associated with multimedia data storage in a DASD **68** typically results in only a minor degradation in the quality of the effected audio or video presentation. Many read errors are often imperceivable to the viewing or listening observer. Moreover, various signal processing and smoothing techniques may be employed to enhance the audio and video presentation upon the occurrence of a hard read error, thereby making the hard read error imperceivable to the viewed or listener.

It is therefore possible to substantially increase the data density of a multimedia data storage disk **108** by tolerating higher read error rates. In a preferred embodiment, a 3.5" data storage disk **108** is employed having a linear bit density of approximately 165 Kbpi (Kilobits per inch). It is noted that more data can be stored per linear unit of track length in a spiral data track in comparison to conventional concentric tracks due to increased formatting efficiency. By eliminating the need to perform seek operations, certain information in the data sector headers and servo sectors is no longer needed. In particular, it is possible to eliminate the gray code track identifier in each servo sector which is normally used to identify tracks when performing seek operations in a conventional DASD. It is also possible to eliminate track identifying information in the data servo headers. Although it may still be desirable to include track identifying information at intervals, such as an index mark per disk revolution, this information requires substantially less storage space when compared to including a conventional gray code track identifier in each of the embedded servo sector headers. It is believed that the combined benefits of increased linear data density and improved formatting efficiency can more than double the total amount of data that can be stored on a spiral disk **108** surface in comparison to conventional data storage disks.

In a preferred embodiment, servo sectors are preferably written to the disk **108** in a conventional concentric manner, rather than using a spiral pattern. Preferably, a concentric track of servo sectors is written to the disk surface **108**, and, at an index position, the servo writer increments its location by one track width in order to write the next circular track that is concentric with respect to the first track. Successive tracks are written in this manner until the disk surface is completely traversed. Spiral data track reading or writing is preferably accomplished by adding a spiral track position error offset signal to the position error signal generated when reading the servo sectors, where the magnitude of the spiral track position error offset signal is dependent on the angular position of the servo sector with respect to an index position. It is noted that the position error offset signal is often referred to as a feed forward signal which is applied to the actuator servo control to compensate for inherent disk **108** eccentricity. During the servo writing procedure, disk **108** eccentricity is typically measured by reading servo patterns with the actuator **118** usually registered an outer or inner diameter crash stop location. The central aperture of a disk **108** may be slightly askew from the physical central axis of rotation typically resulting from manufacturing tolerance variations and a small amount of disk slippage that often occurs when the disk is rotated after being mounted on the hub of the spindle motor **114**.

For example, at the index position, the position error offset signal will be zero. As the disk **108** rotates beyond the index position, a spiral track position error offset signal increases in magnitude, and is added to or subtracted from the position error signal, depending on whether the track spirals inwardly or outwardly. At a position 180 degrees from the index position, for example, the magnitude of the offset signal will result in displacement of the actuator by exactly one-half the track width. Concentric servo sectors are preferred because they simplify the task of initially writing servo sectors to the disk surface **108**. By writing concentric servo patterns to the disk surface **108**, it is possible to write to all disk surfaces in a single pass, regardless of the direction of the spiral. However, it would be alternatively possible to write servo sectors in spiral patterns.

Other advantages realizable when employing spiral data tracks for storing multimedia data, as well as other alternatives approaches for effectuating multimedia data storage on spiral data tracks, are more thoroughly discussed in the previously identified related U.S. patent application Ser. No. 08/288,525 entitled "Apparatus and Method for Providing Multimedia Data."

Multimedia DASD Data Storage Architecture

Local customized control over the presentation of a multimedia program is preferably effectuated by a novel multimedia DASD data storage architecture that provides for the buffering and accessing of non-sequentially ordered and sequentially ordered video segments **54** received from a multimedia server **30** preferably of the type previously described. For purposes of clarity and simplicity of explanation, the novel DASD data storage architecture will be discussed in accordance with a number of assumptions. It is to be understood, however, that these assumptions are for illustrative purposes only, and do not represent limitations as to the scope of the disclosed method and apparatus.

Referring now to FIGS. **15–19**, it is assumed, for purposes of explanation, that the multimedia DASD **68** includes a single data storage disk **108** having an inbound spiral data track **110** and an outbound spiral data track **111** respectively disposed on the lower and upper surfaces **104** and **102** of the disk **108**. In this illustrative example, the capacity of the presentation control window **90** for effectuating full VCR-type presentation control functions is twenty seconds, and the customer selected movie is two-hours in duration. It is noted that a typical presentation control window **90** in actual use will generally comprise, for example, between a twenty and fifty minute portion of a two-hour multimedia program.

Also, it is assumed that the input buffer **66** of the set-top control system **62** is configured to store two discrete video segments **48**. Accordingly, the multimedia server **30** transmits video segment packets containing no more than two video segments **48** to the set-top control system **62** during each transmission window. As discussed previously hereinabove, a set-top control system **62** configuration employing a relatively small input buffer **66** that can store only two video segments **48** represents a relatively low-cost configuration. Such a low-cost configuration typically requires frequent packet transmissions from the multimedia server **30**, thereby increasing the service costs associated with receiving multimedia programming from the multimedia server **30**.

Further, it is assumed that the MPEG-1 compression standard is employed to obtain compression ratios on the order of 100:1. Also, it is assumed that the two-hour movie has been indexed and parsed into 7,200 discrete compressed video segments **48**, with each video segment **48** representing a one second, full-motion video portion of the movie. At an assumed NTSC video frame rate of thirty frames per second, a one second, full-motion video portion of the movie can be compressed on average to approximately 0.167 MB (167 KB). The input buffer, therefore, must include at least 0.334 MB of memory in order to store two 0.167 MB video segments **48**. The disk **108** preferably has a diameter of 3.5" and a linear bit density of approximately 165 Kbps. Accordingly, a compressed video segment **48** can generally be stored within two revolutions of the spiral data track **110** or **111**.

Assuming that a twenty-second translatable presentation control window **90** is employed, a total of twenty one-second compressed video segments **48** are buffered on the multimedia DASD **68** at any one time. A total of ten one-second compressed video segments **48** respectively define an odd block, Block-A **50**, and an even block, Block-B **52**. The video segments associated with Block-A **50** and Block-B **52** are respectively stored on each of the lower and upper disk surfaces **104** and **102**. It is noted that the two blocks, Block-A **50** and Block-B **52**, each encompass approximately twenty revolutions of the spiral tracks respectively disposed on the lower and upper disk surfaces **104** and **102**, for a total of forty revolutions for the entire presentation control window buffer **90**. Further, it will take approximately two seconds for the actuator **112** to traverse both the inbound and outbound spiral data tracks **110** and **111**. One completed progression along the inbound and outbound spiral tracks comprising the presentation control window **90** buffer will be referred to hereinafter as a RUN.

In order to complete one RUN in two seconds for a multimedia DASD **68** employing a single disk **108** in a modulo-2 configuration (e.g., **2** blocks, Block-A **50** and Block-B **52**), the disk **108** must be rotated for a total of forty revolutions (2 revolutions/segment×10 segments/surface×2 surfaces=40 revolutions). This corresponds to a relatively slow disk **108** rotation rate of approximately 1,200 RPM (40 revs/2 sec×60 sec/min). As mentioned previously, a typical minimal nominal rate of disk **108** rotation for a DASD **68** configuration employing an air bearing rather than a conformal lubricant bearing generally falls within the range of approximately 1,600 RPM to 1,800 RPM.

Referring now in detail to FIGS. **17–19**, there is illustrated one embodiment of a novel DASD data storage architecture by which discrete video segments **48** comprising of video signal bitstream are asynchronously written to and read from spiral data tracks **110** and **111** respectively disposed on a lower and upper surface **104** and **102** of a data storage disk **108**. As previously mentioned with respect to FIG. **8**, the twenty second presentation control window **90** is shown in FIGS. **17–19** as comprising one odd block, Block-A **50**, of video segments **48** having odd address indices, and one even block, Block-B **52**, of video segments **48** having even address indices. In this embodiment, the video segments **48** defining Block-A **50** are preferably written to and read from the inbound spiral track **110** disposed on the lower surface **104** of the data storage disk **108**. The video segments **48** defining Block-B **52** are preferably written to and read from the outbound spiral track **111** disposed on the upper surface **102** of the disk **108**. It is to be understood that Block-A **50** and Block-B **52** may be written to either of the upper and lower disk surfaces **102** and **104**, respectively.

The translatable presentation control window **90**, shown in the composite illustration of FIG. **19**, can be viewed as comprising a total of twenty storage locations, with ten contiguous storage locations respectively disposed on each of the lower and upper disk surfaces **104** and **102**. For purposes of explanation, the storage locations disposed on the lower disk surface **104** are superimposed onto the upper disk surface **102** along a central axis **200** of the disk **108** in the composite illustration provided in FIG. **19**. As illustrated, Location-1 through Location-10 define Block-A **50** disposed on the inbound spiral track **110** of the lower disk surface **104**, while Location-11 through Location-20 define Block-B **52** disposed on the outbound spiral track **111** on the upper disk surface **102**. Further, the disk **108** surface area allocated to support the twenty second presentation control window **90** is preferably defined in a data band between an outer spiral diameter location (OSDL) **196** and an inner spiral diameter location (ISDL) **198**. As discussed previously hereinabove, this data band may, for example, be located at any diameter location on a disk surface, on any disk of a DASD **68** employing multiple disks, or at a disk location where the transducer/slider assembly **116** is supportable by a suitably well-developed air bearing.

In general, a lower transducer **117** sweeps over storage Locations 1–10 disposed on the inbound spiral track **110** of the lower disk surface **104** from the OSDL **196** toward the ISDL **198**. After a head switch operation is performed at the ISDL **198**, an upper transducer **116** sweeps over storage Locations 11–20 disposed on the outbound spiral track **111** of the upper disk surface **102** until the OSDL **196** is reached. The progression of the lower and upper transducers **117** and **116** respectively along the inbound and outbound spiral tracks **110** and **111** is respectively shown by the direction arrows provided in FIG. **19**. This process of sweeping over one surface of the disk **108**, performing a head switch operation, and then sweeping over another disk surface is continuously repeated. The video segments **48** received from the set-top controller **64** and transferred to the multimedia DASD **68** are preferably asynchronously written to and read from the storage locations 1–10 and 11–20 in accordance with a novel formatting methodology disclosed hereinbelow.

Initially, it is assumed that an asynchronous video bitstream **54** has been received by the set-top controller **64**, and that none of the video segments **48** comprising the video bitstream **54** have yet been transferred to the multimedia DASD **68**. It is noted that storage locations 1–20 are indicated along the vertical or Y-axis of FIG. **18**, and that each column along the horizontal or X-axis indicates a particular RUN number. Each RUN, as mentioned previously, represents one complete progression through the storage locations of the inbound spiral track **110** of the lower disk surface **104**, and, after performing a head switch

operation, a complete progression through the storage locations of the outbound spiral track **111** of the upper disk surface **102**. It is noted that the operation of writing a video segment **48** to a particular storage location is indicated in FIG. **18** by the letter "W," and the operation of reading a video segment **48** from a particular storage location is indicated by the letter "R." It is further noted that storage locations containing the letter designator "S" indicate that these storage locations contain a previously written video segment **48**, and are skipped by the transducer when sweeping over the inbound and outbound spiral tracks **110** and **111** defining the presentation control window **90**. The term skipping refers to a transducer neither writing (W) to or reading (R) from a particular storage location during a particular RUN.

One important feature of the novel DASD data storage architecture concerns the writing of a video segment **48** to the DASD **68** while concurrently transferring the same video segment **48** to the decoder **74** for virtually instantaneous presentation on a subscriber's television **76**. This concurrent transferring operation preferably continues until such time as the first storage location defined on each of the disk surfaces contains at least one video segment **48**. Thereafter, video segments **48** are preferably transferred to the output buffer **72** and decoder **74** exclusively from the DASD **68**, except in the event that a forward or reverse operation cannot be satisfied within the presently defined presentation control window **90**, thus requiring transmission of additional video segment **48** information from the multimedia server **30**.

Presentation Control Window Architecture

Still referring to FIGS. **18** and **19** in detail, it remains assumed that the set-top controller **64** receives a video bitstream **54** comprising a non-sequential series portion of discrete video segments **48**, that the input buffer **66** is configured to store a maximum of two one-second video segments **48**, and that the presentation control window buffer **90** is defined as being twenty seconds in duration or capacity. Starting with RUN **1**, the set-top controller **64** preferably coordinates the transfer of the first one-second segment A1 from the input buffer **66** concurrently to the multimedia DASD **68** and the decoder **74** to provide for instantaneous displaying of the first segment A1 on the subscribers television **76**. It is noted that the video segments **48** transferred directly from the input buffer **66** to the decoder **74** may also be temporarily buffered in the transfer buffer **70** prior to being transferred to the output buffer **72** and subsequently to the decoder **74**. It is further noted that data unrelated to the selected multimedia program may also be received by the input buffer **66** and transferred to the transfer buffer **70** for subsequent storage on the DASD **68** or transmission to the output buffer **72**.

Information representative of a picture-in-picture-type dialogue message annunciating the reception of an incoming communication from a source other than the multimedia server **30**, for example, may be received by the input buffer **66** and transferred to the transfer buffer **70** and/or the output buffer **72** for immediate decoding by the decoder **74** and displaying on the attached television **76**. Such unrelated information received by the input buffer **66** and transferred to the transfer buffer **70** may also be stored on the DASD **68** during periods of transducer **116** or actuator **118** idleness. The rate at which multimedia program data is written to and read from the DASD **68** may also allow for dual tasking by the actuator **118** between operations associated with transferring video segment data to and from the DASD **68** and operations associated with transferring data unrelated to the video segment data to and from the DASD **68**.

The concurrent operations of writing the first one-second video segment A1 to Location-1 **202** and transferring the video segment A1 to the decoder **74** and display **76** for RUN **1** is indicated by the letter designator "WR" in FIG. **18**. After writing video segment A1 to the first physical storage location on the inbound spiral track **110**, identified as Location-1 **202**, the next contiguous storage location, Location-2 **204**, on the inbound spiral track **110** rotates into proximity with the lower transducer **117**. The video segment A3 is then physically written to storage Location-2 **204**. After writing video segment A3 to storage Location-2 **204**, the lower transducer **117** follows the inbound spiral track **110** on the lower disk surface **104** until an ISDL **198** is reached. It is noted that the presentation control window **90** is defined as the portion of the inbound and outbound spiral tracks **110** and **111** defined between the OSDL **196** and the ISDL **198**. Having reached the ISDL **198**, a head switch is performed to de-activate the lower transducer **117** and to activate the upper transducer **116** also registered at the ISDL **198**.

At Location-11 **240** of the outbound spiral track **111** of the upper disk surface **102**, video segment A2 is simultaneously transferred to Location-11 **240** and to the decoder **74** for instantaneous presentation on the television **76**. The set-top controller **64** preferably coordinates the operation of the output buffer **72** and the decoder **74** to ensure that video segments **48** buffered in the output buffer **72** are transferred to the decoder **74** at a prescribed transfer rate sufficient to provide uninterrupted presentation of each of the one-second video segments buffered in the presentation control window **90**. When storage Location-12 **238** rotates into proximity with the upper transducer **116**, video segment A4 is written to storage Location-12 **238**. After writing video segment A4 to storage Location-12 **238**, the upper transducer **116** progresses along the outbound spiral track **111** until the OSDL **196** is reached, at which point another head switch is performed to activate the lower transducer **117** in proximity with the lower disk surface **104**. Having now completed RUN **1**, the operations associated with RUN **2** are disclosed.

After performing the head switch from the upper transducer **116** to the lower transducer **117**, the lower transducer **117** preferably skips storage Location-1 **202**, which currently contains video segment A1. Upon reaching Location-2 **204**, the lower transducer **117** reads video segment A3 from storage Location-2 **204**, which is then transferred to the decoder **74** and display **76**. As such, the initially asynchronously stored video segments A1, A2, and A3 have now been displayed in accordance with their original sequential order. As the lower transducer **117** progresses along the inbound spiral track **110** toward the ISDL **198**, video segments A5 and A7 are respectively written to Location-3 **206** and Location-4 **208**. Upon reaching the ISDL **198**, another head switch is performed, thus bringing the upper transducer **116** into proximity with Location-11 **240**. The upper transducer **116** then skips Location-11 **240**, reads previously written video segment A4 from Location-12 **238**, and then writes video segments A6 and A8 respectively to Location-13 **236** and Location-14 **234**. Video segment A4 read from Location-12 **238** is transferred to the output buffer **72** and then to the decoder **74** for sequential presentation on the television **76** immediately following presentation of the previously read video segment A3. The upper transducer **116** continues along the outbound spiral track **111** until the OSDL **196** is reached.

Briefly, the operations associated with RUN **3**, which commence at the OSDL **196** after completion of an upper to lower transducer head switch, include skipping Location-1

202 and Location-2 204, reading video segment A5 from Location-3 206, skipping Location-4 208, and writing video segments A9 and A11 respectively to Location-5 210 and Location-6 212. After a head switch performed at the ISDL 198, the upper transducer 116 traverses the outbound spiral track 111 and skips Location-11 240 and Location-12 238, reads previously written video segment A6 from Location-13 236, skips Location-14 234, and writes video segments A10 and A12 respectively to Location-15 232 and Location-16 230. The upper transducer 116 progresses through the outbound spiral track 111 until the OSDL 196 is again reached. The storage locations of the disk 108 associated with RUN 4 and RUN 5 are similarly written to and read from in accordance with the operations depicted in FIG. 18.

At the end of RUN 5, video segment A20 is written to Location-20 222 on the outbound spiral track 111 of the upper disk surface 102. Accordingly, all of the first twenty one-second video segments 48 comprising the twenty second presentation control window 90 have been written to the disk 108 of the multimedia DASD 68 at the completion of RUN 5. It is also noted that, at the end of RUN 5, the first column C1 of the customized matrix 51 illustrated in FIG. 8 has now been buffered in the inbound and outbound spiral tracks 110 and 111 of the data storage disk 108 constituting the twenty second presentation control window 90.

Update-In-Place Architecture

After RUN 5, the novel multimedia DASD 68 employs a unique update-in-place formatting architecture and methodology to effectively move, or temporally translate, the virtual presentation control window 90 forward or backward in time. In general, as the subscriber progresses forward through the two-hour movie, video segments 48 previously stored on the multimedia DASD 68 will be replaced by newly received video segments 48 transmitted over the communication channel 44. As such, the novel interleaved DASD 68 formatting architecture and methodology essentially operates as an asynchronous, data storage disk FIFO (First-In-First-Out) buffer when progressing through the movie in a forward temporal direction.

Referring now to RUN 6, illustrated in FIG. 18, video segment A1 previously stored at Location-1 202 is replaced, or written over, by newly received video segment A21. After transferring the video segment A21 to Location-1 202, the lower transducer 117 skips Location-2 204 through Location-5 210, reads video segment A11 from Location-6 212, and then skips Location-7 214 through Location-10 220. A head switch is performed, and the upper transducer 116 writes segment A22 to Location-11 240, thus writing over previously stored video segment A2. The upper transducer 116 skips Location-12 238 through Location-15 232, reads video segment A12 from Location-16 230, and then skips Location-17 228 through Location-20 222, thus completing RUN 6. As can be seen in FIG. 18, previously written video segments are eventually replaced by newly received video segments 48 during each subsequent RUN. In this manner, the novel formatting methodology allows for simultaneous reading and updating of multimedia program data buffered by the DASD 68 in accordance with the temporal progression of the translatable presentation control window 90.

An important advantage of the novel update-in-place formatting architecture and methodology concerns the ease by which a subscriber may move in a forward or a reverse temporal direction within the portion of the multimedia program stored within the presentation control window 90. For example, during RUN 8, video segment A15 stored at Location-8 216 will be read from the inbound spiral track 110 and transferred to the decoder 74 for presentation on the television 76. When desired, the subscribing viewer can also select any of the neighboring video segments on the inbound spiral track 110, including video segments A7, A9, A11, A13, A17, A19, A21, A23, and A25. From the subscriber's point of view, this will have the appearance of selectively moving in either a forward or reverse temporal direction with respect to video segment A15 by two-second increments. By way of further example, if video segment A21 in RUN 8 is selected and the subscriber desires to review the next video segment A22, then video segment A22 will be read from the outbound spiral track 111 on the upper disk surface 102, thus appearing as if six-seconds of the movie were skipped. Preferably, a subscriber actuates a forward or reverse control button on an IR remote control handset 25 in order to effectuate forward or reverse temporal movement within the presentation control window 90.

Spiral-And-Hold Architecture

The multimedia DASD 68 preferably performs a novel spiral-and-hold operation when a subscribing viewer initiates a forward, reverse, or pause presentation control operation or when an output buffer 72 overflow condition is imminent. It is noted that activation of a pause button on the IR remote control handset 25 will generally result in freezing of the current image displayed on the subscriber's television 76. Upon initiation of a pause command, the decoder 74 preferably halts the decoding operation under the control of the set-top controller 64. Also, in cases where forward and reverse searches are initiated by the viewer, certain situations may occur where the physical spiral track storage location of one or more desired video segments rotates into proximity with the transducer before the output buffer 72 can accept the additional video segment 48 data without overflowing. In order to prevent the output buffer 72 from overflowing in such situations, a novel spiral-and-hold operation is performed.

In accordance with the novel spiral-and-hold operation, the actuator servo control of the DASD 68 preferably transitions from a spiral track following mode to a cylindrical track following mode. The cylindrical track following mode is electronically effectuated by changing the reference position error signal from a wedge or ramp signal to a constant position error signal. This can be accomplished by transmitting only the reference position error signal, also termed the feed forward signal as previously discussed, to the actuator servo control without transmitting the spiral track position error offset signal. The constant reference signal will cause the actuator servo control to transition into a cylindrical track following mode, while a positive or negative ramp signal will transition the actuator servo control into a spiral track following mode required to follow an inbound or outbound spiral track.

The DASD controller 67 preferably transmits either one of the ramp or constant position error signals to the actuator servo control to respectively effectuate the spiral and cylindrical track following modes in response to the state of the output buffer 72. If, for example, the output buffer 72 indicates that an imminent overflow condition may occur, the DASD controller 67 preferably transmits a constant position error signal to the DASD 68 actuator servo control to transition the operation mode from a spiral track following mode to a cylindrical track following mode. After sensing that the output buffer 72 overflow condition has been alleviated, or when a viewer desires to resume viewing of the movie after initiating a pause command, the set-top controller 64 preferably transmits a positive or negative going ramp position error signal to the multimedia DASD 68 to resume the spiral track following mode of operation.

Asynchronous Formatting Guidelines

In general, the following formatting parameters and guidelines developed by the inventors are applicable for implementing various embodiments of a novel asynchronous formatting architecture and methodology, examples of which are disclosed herein:

Formatting Parameters:

D=Number of disk surfaces used for presentation control window buffer

M=Number of video segment blocks per disk surface used for presentation control window buffer

L=Length of each block in video segments

S0=Size of each video segment in megabytes

R0=Number of disk revolutions per video segment

T0=Decompressed full-motion program time in seconds per video segment

P=Maximum server packet size in number of video segments based on subscriber's input buffer capacity in set-top control system

IBS=Input buffer size in megabytes (preferably, IBS>2×P×S0)

Formatting Equations

Window Storage Capacity (SC)	=	D × M × L × S0 (megabytes)
Window Duration (PTD)	=	D × M × L × T0 (seconds)
Spindle Motor Velocity (NV)	=	60 × L × R0/T0 (RPM) (odd and even indexed video segments on same disk surface)
Spindle Motor Velocity (NV)	=	60 × M × L × R0/T0 (RPM) (odd and even indexed video segments on different disk surfaces)
Block Indexing (BI)	=	modulo (D × M)

Assumptions

Form Factor: Any direct access storage device form factor

R0 revolutions required to store one average sized compressed video segment S0

Input buffer of set-top control system is preferably configured to store at least two server packets (P) to allow server flexibility when asynchronously transmitting video segment packets (i.e., IBS>2×P×S0)

EXAMPLE NO. 1

In the illustrative example discussed hereinabove with respect to FIGS. **17–19**, the total number of disk surfaces employed to support the twenty second presentation control window buffer **90** is two, thus, D=2. The number of video segment blocks per disk surface is one block (odd Block-A **50** on lower disk surface, even Block-B **52** on upper disk surface), thus, M=1. The length of each block is ten segments, thus, L=10, with each video segment **48** representing one second of decompressed full-motion program time, thus T0=1.0. Assuming an MPEG-1 compression ratio of approximately 100:1, each video segment **48** is compressed to approximately 0.167 MB, thus, S0=0.167 MB, and approximately two disk revolutions of a 3.5" diameter disk **108** are required to store each video segment **48**, thus R0=2.

Applying these formatting parameters, D=2, M=1, L=10, S0=0.167 MB, R0=2, and T0=1.0 to the formatting guideline equations, the following DASD **68** formatting specifications are applicable:

Window Storage Capacity (SC)	=	2 × 1 × 10 × 0.167
	=	3.34 MB
Window Duration (PTD)	=	2 × 1 × 10 × 1.0
	=	20 seconds
Spindle Motor Velocity (NV)	=	60 × 1 × 10 × 2/1.0
	=	1,200 RPM
Block Indexing (BI)	=	modulo (2 × 1)

Also, it is assumed that the input buffer **66** of the receiving set-top control system **62** is configured to store a packet having a maximum size of two video segments **48**, thus P=2. Accordingly, the input buffer **66** must have a minimum storage capacity of at least 2×P×S0, or 0.668 MB, and the minimum DASD **68** storage capacity required to accommodate the twenty second translatable presentation control window buffer **90** having a modulo-2 configuration is approximately 3.34 MB.

EXAMPLE NO. 2

By way of further example, it is assumed that for a 3.5" diameter disk having a certain recording density, two tracks (R0=2 revolutions) are required to store one average sized MPEG-1 compressed video segment **48** representative of one second (T0=1) of full-motion video. This corresponds to 0.167 MB of disk space required to store each video segment **48**. Assuming that the maximum size of each packet transmitted by the multimedia server **30** is two segments (P=2), the set-top control system's **62** input buffer **66** storage capacity (IBS) should be at least 2×2×0.167 MB, or 0.668 MB, as in the preceding illustrative example. It is further assumed that the DASD **68** includes a single data storage disk **108** or that only two disk surfaces (D=2) are dedicated to support media-on-demand services. If each disk surface is formatted to include two blocks per disk surface (M=2) and five video segments **48** per block (L=5), then the rotational spindle velocity is computed as NV=60×L×R0/T0=60×5×2/1.0=600 RPM for odd and even indexed video segments **48** being buffered on the same disk surface. For a configuration in which odd and even indexed segments **48** are formatted on different disk surfaces, the spindle motor rotational velocity is computed as NV=60×M×L×R0/T0=60×2×5×2/1.0=1,200 RPM. The duration of the presentation control window **90** is computed as PTD=D×M×L×T=2×2×5×1=20 seconds, and its storage capacity is computed as SC=D×M×L×S0=2×2×5×0.167 MB=3.34 MB.

EXAMPLE NO. 3

As a more realistic example associated with the DASD **68** described above using two disk surfaces dedicated for video-on-demand, it is assumed that a thirty minute presentation control window **90** is desired. This would require storage for 30 min×60 sec/min=1,800 one-second (T0=1.0) compressed video segments **48**, and, assuming R0=2, a total of 2×1,800=3,600 tracks, or 1,800 tracks per each of two disk surfaces (D=2), would have to be allocated to support the thirty minute presentation control window **90**. Of the numerous ways of disk **108** formatting available, it is assumed that both odd and even indexed video segments **48** are formatted on the same disk surface, with thirty segments populating each block (L=30) and sixty blocks formatted on each disk surface (M=60). The corresponding spindle velocity is computed as NV=60×30×2/1.0=3,600 RPM, which is generally recognized as an industry standard for DASD **68** spindle motor velocity. Assuming conventional track densities for a 3.5" diameter disk at over 4,000 tracks per disk

surface, the presentation control window buffer **90** described in this example will only occupy less than one-half of the data band of the 3.5" diameter disk **108**. The required disk storage capacity for this application would be approximately 300 MB. It is to be understood, of course, that different formatting configurations will often be required for DASDs **68** having form factors other than those that include a 3.5" diameter disk **108**, such as those employing 2.5"or 1.8" diameter disks **108**.

EXAMPLE NO. 4

By way of further example, higher degrees of interleaving are achievable when the video segments **48** are formatted in the DASD **68** in accordance with a modulo-4 formatting methodology for a single disk **108**. Assuming that a subscriber specifies a forty second presentation control window **90** and receives video segments **48** corresponding to the customized matrix **51** depicted in FIG. **9**, and further assuming that each video segment **48** represents two seconds of non-compressed, full-motion video which are received in packets having a maximum size of five video segments **48**, the first twenty two-second video segments **48** populating the four blocks comprising the customized matrix **51**, Block-A **53**, Block-B **55**, Block-C **57**, and Block-D **59**, would be formatted modulo-4 on the DASD **68** as follows:

Block-A: A**1**, A**5**, A**9**, A**13**, A**17**

Block-B: A**2**, A**6**, A**10**, A**14**, A**18**

Block-C: A**3**, A**7**, A**11**, A**15**, A**19**

Block-D: A**4**, A**8**, A**12**, A**16**, A**20**

The video segments **48** associated with Block-A **53** and Block-B **55** are preferably written to and read from, for example, the lower surface **104** of the disk **108**, while the video segments **48** associated with Block-C **57** and Block-D **59** are written to and read from the upper disk surface **102**. Applying the applicable parameters (D=2, M=2, L=5, S**0**=0.334 MB, R**0**=4, T**0**=2.0, and P=5) of this modulo-4 formatting example to the general formatting equations, the following DASD **68** formatting specifications are applicable:

Window Storage Capacity	=	2 × 2 × 5 × 0.334
(SC)	=	6.68 MB
Window Duration (PTD)	=	2 × 2 × 5 × 2.0
	=	40 seconds
Spindle Motor	=	60 × 10 × 4/2.0
Velocity (NV)	=	1,200 RPM
Block Indexing (BI)	=	modulo 2 × 2
	=	modulo-4

Thus, the minimum DASD **68** storage capacity required to accommodate the forty second translatable presentation control window **90** buffer having a modulo-4 configuration is approximately 6.68 MB.

It may be desirable to configure the multimedia DASD **68** to include a plurality of data storage disks **108** to increase the storage capacity of the DASD **68** and the duration of the multimedia program bufferable in the presentation control window **90**. It is to be understood that all or portions of the DASD **68** disk storage surfaces may be allocated to accommodate the presentation control window **90** for purposes of providing local VCR-type control of multimedia program presentation. Other portions of the DASD **68** disk storage surfaces may be allocated for storing text files, application software, and other data associated with typical usage of a conventional DASD. The DASD **68** storage surfaces may include concentric and spiral data track portions to accommodate a variety of data storing needs. Accordingly, additional data storage disks **108** provide for increased DASD **68** storage capacity that may be allocated for a number of differing purposes.

In a DASD **68** configuration employing four disks **108**, for example, the transducers will progress along the inbound and outbound spiral tracks preferably disposed on each of the lower and upper disk surfaces, thus weaving in and out of the stack of disks **108**. As previously mentioned, a pair of disk surfaces having oppositely spiraled data tracks need not necessarily be located on opposite sides of the same disk **108**. For example, both surfaces of one disk may be formatted with inwardly spiraling data tracks, while both of the surfaces of another disk may be formatted with outwardly spiraling data tracks.

EXAMPLE NO. 5

By way of further example, an embodiment of a multimedia DASD **68** suitable for providing a forty minute presentation control window **90** for effectuating full VCR-type presentation control over a forty minute portion of a two-hour video program preferably includes four disks **108** for buffering one-second compressed video segments **48** formatted modulo-80 thereon. In accordance with this configuration, it is assumed that each surface of the four disks (D=8) will be formatted to include ten segment blocks (M=10) having a segment length of thirty segments (L=30), and that odd and even indexed video segments **48** will be buffered on the same disk surfaces. As such, the following parameters are assumed to apply: D=8, M=10, L=30, S**0**=0.167 MB, R**0**=2, T**0**=1.0, and P=30. Applying these parameters to the formatting guideline equations, the following DASD **68** formatting specifications are applicable:

Window Storage Capacity	=	8 × 10 × 30 × 0.167
(SC)	=	400 megabytes
Window Duration (PTD)	=	8 × 10 × 30 × 1.0
	=	2,400 seconds
	=	40 minutes
Spindle Motor	=	60 × 30 × 2/1.0
Velocity (NV)	=	3,600 RPM
Block Indexing (BI)	=	modulo 8 × 10
	=	modulo-80

Thus, the minimum DASD **68** storage capacity required to accommodate the forty minute translatable presentation control window **90** buffer formatted modulo-80 is approximately 400 MB. The nominal spindle motor **114** velocity for such a configuration is approximately 3,600 RPM. Those skilled in the art will immediately realize that 3,600 RPM represents a relatively slow spindle motor velocity requirement in view of the substantial advantages associated with providing full local VCR-type presentation control of a forty minute portion of a two-hour video program. It is noted that the input buffer **66** of the receiving set-top control system **62** must be configured in this example to store at least thirty video segments having an average size of 0.167 MB, or approximately 5 MB . For increased multimedia server **30** asynchronous transmission flexibility, the input buffer should have a storage capacity of approximately 10 MB (IBS>2×P×S**0**, where P=30 and S**0**=0.167 MB).

The asynchronous formatting guidelines and considerations disclosed herein provide the designer with an appreciable degree of flexibility when designing a multimedia DASD **68** for use in a multimedia communication system. The formatting of the multimedia information received from a remote multimedia server **30** may be varied in accordance

with the operational characteristics, specifications, and functions of a particular DASD **68** disposed in a local set-top control system **62**.

EXAMPLE NO. 6

For example, relatively low spindle motor **114** rates of rotation may be achieved by appropriately formatting the video data representing a selected multimedia program. In one illustrative embodiment, the video segment **48** information transmitted by the multimedia server **30** to the set-top control system **62** in discrete packets shown in FIG. **10** and formatted on the multimedia DASD **68** as shown in FIG. **20** will provide for a relatively low spindle motor **114** velocity of approximately 400 RPM. In this modulo-4 example, it is assumed that each video segment **48** is representative of a two-second (T**0**=2.0) portion (S**0**=2×0.167 MB=0.334 MB, and R**0**=4 revolutions) of the multimedia program, that at least five video segments (L=5) are stored in each of the two blocks (M=2) disposed on each of two disk surfaces (D=2), and that the two blocks **53** and **57** containing odd indexed video segments **48** are disposed on one disk surface, and that the two blocks **55** and **59** containing even indexed video segments **48** are disposed on another disk surface. By applying the appropriate spindle motor velocity equation, 60×M×L×R**0**/T**0**, it can be confirmed that the nominal spindle motor velocity for this example is 60×2×5×4/2.0=1,200 RPM.

EXAMPLE NO. 7

Assuming now that the two blocks **53** and **55** respectively containing odd and even indexed video segments **48** are disposed on one disk surface, and that the other two blocks **57** and **59** respectively containing odd and even indexed video segments **48** are disposed on another disk surface, application of the appropriate spindle motor velocity equation, 60×L×R**0**/T**0**, results in a nominal spindle motor velocity for this example of 60×5×4/2.0=600 RPM.

The formatting configuration examples discussed hereinabove demonstrate that other spindle motor **114** velocities are also easily achievable. By varying important formatting parameters, such as the number of segment blocks (M), the block length (L) of each block, the distribution of odd and even indexed segment blocks respectively on the same disk surfaces or on different disk surfaces, the number of disk surfaces (D) employed, the size (IBS) of the input buffer **66**, and the size of the discrete video segments (S**0**), for example, multimedia program information can be efficiently transmitted from the multimedia server **30** in a format specifically tailored to the system configuration and control functionality of a subscribing customer's unique set-top control system **62**.

Asynchronous Formatting Methodology

Turning now to FIGS. **21**–**27**, there is illustrated in flow chart form one embodiment for effectuating the novel multimedia DASD formatting methodology as depicted in chart form in FIGS. **20**. A subscriber preferably communicates with a remote multimedia server **30** through a novel set-top control system **62** preferably of a type discussed in detail hereinabove. In one embodiment, a subscriber to the novel media-on-demand communication system is presented with a menu of multimedia program selections preferably selectable on a pay-per-view basis, at step **300**. It this example, it is assumed that the customer is interested in selecting among various video programs, such as feature-length movies. At step **302**, the subscriber preferably selects at least one multimedia program presented on the selection menu. It is noted that selection of one or more multimedia programs using the menu system may be effectuated through various known techniques, including the use of an IR remote control handset **25**, a touch-sensitive screen interface of a type known in the art, or a point-and-click interface similar to that commonly used when communicating with computer systems, for example.

At step **304**, the subscriber preferably specifies the duration or capacity of the presentation control window **90** associated with the selected multimedia program. Alternatively, a default presentation control window **90** duration may also be selected. A subscriber, for example, may specify a forty minute duration for the presentation control window **90** associated with a feature-length motion picture typically having a running time between two and three hours. For other multimedia programs, such as a fifty minute lecture previously recorded at a local university, for example, a subscribing customer may wish to specify a fifty minute duration for the presentation control window **90** so that the entire lecture can be accessed in either a forward or reverse temporal direction without requiring re-transmission of previously transmitted portions of the lecture, thus avoiding accrual of additional costs associated with the re-transmitted lecture portions.

The intelligent set-top control system **62** preferably performs a self-diagnostic routine to determine its internal configuration, at step **306**. The configuration determination procedure is preferably performed dynamically during the power-up initialization sequence of the set-top control system **62**. Alternatively, configuration parameters may be stored in a memory, such as Read-Only-Memory (ROM), which is preferably updated when changes are made to the internal configuration of the set-top control system **62**. Typical configuration parameters include the size of the input buffer **66**, the nominal spindle motor **114** velocity, the number of data storage disks mounted to the spindle motor **114** and/or disk surfaces which are to be allocated for the purpose of supporting the presentation control window **90** buffer, and the unique address of the set-top control system **62**, among others.

After selecting one or more desired multimedia programs from the multimedia server menu, the set-top controller **64**, at step **308**, preferably performs various internal computations to determine the nominal DASD **68** storage capacity needed to support the customer-specified presentation control window **90**. The predetermined time duration (PTD) specified by the subscriber is indicated as the variable Ut, at step **308**, measured in seconds. In accordance with the novel asynchronous formatting guidelines and equations previously discussed, the nominal storage capacity (SC) can be derived from the subscriber's specified duration (Ut) and the storage capacity (S**0**) required to store each of the discrete program segments **48**. For a system employing an MPEG-1 coding standard, for example, the average value of S**0** is approximately 0.167 megabytes.

At step **310**, the set-top control system **62** preferably determines whether the DASD **68** can accommodate the size of the subscriber-specified presentation control window **90**. A comparison is made between the nominal size of the subscriber-specified presentation control window buffer **90** and the available storage capacity of the DASD **68** allocatable to support the presentation control window **90**. If it is determined that the DASD **68** lacks sufficient storage capacity to accommodate the subscriber-specified presentation control window **90** duration, and alert signal is preferably annunciated by the set-top control system **62**, at step **312**, indicating to the subscriber that the specified presentation

control window **90** duration cannot be accommodated. An alert message is preferably transmitted on the display **76** coupled to the set-top control system **62** requesting the subscriber to specify a shorter presentation control window **90** duration, at step **316**. A computation of the maximum allocatable presentation control window **90** duration is preferably performed by the set-top control system **62**, the result of which is preferably communicated to the subscriber over the display **76**.

At step **314**, the configuration parameters associated with the presentation control window **90** and the configuration and functionality of a subscribing customer's set-top control system **62** are transmitted to the multimedia server **30**. The multimedia server **30** preferably includes a server controller **34** that, at step **316**, reads the configuration parameters received from a subscriber's set-top control system **62**. The set-top control system **62** parameters preferably include the number of disk surfaces (D) and available disk storage capacity (SC) allocated for supporting the presentation control window **90** buffer, the predetermined time duration (PTD) of the presentation control window **90** buffer, the size (IBS) of the input buffer **66**, and the velocity (NV) of the spindle motor **114**. It is noted that the computations performed by the set-top control system **62** at step **310** to determine whether the DASD **68** can accommodate the subscriber-specified presentation control window **90** may instead be performed by the server controller **34** based upon the received set-top control system **62** configuration parameters.

As previously discussed, a selected multimedia program may be stored in the multimedia server **30** in either an analog format or a digital format. A selected multimedia program stored in an analog format is preferably digitized at step **318**. It is noted that a real-time broadcast of multimedia program transmitted over a local, national, or international network broadcast channel **45**, is typically received by the multimedia server **30** in an analog format, and may also be digitized at step **318**. The digitized multimedia program is then segmentized or divided into a series of sequentially ordered program segments **48**, at step **320**, typically by the coder **32** and/or the index parser **33**. Unique addresses are also encoded into each discrete program segment **48** by the index parser **33**. Each of the program segments **48** included within the sequential series of programs segments preferably represents a predetermined duration of the selected multimedia program. In one embodiment, each of the program segments **48** represent a fixed duration of the multimedia program, such as a one second or two second portion of the multimedia program. It is noted that the digitizing and segmentizing operations of steps **318** and **320** are typically not applicable to multimedia programs previously processed and stored in the multimedia server **30** in a digital format. These steps are preferably performed only once when initially storing a multimedia program on a digital storage device **35** within the multimedia server **30**.

Turning now to FIG. **22** the sequential program segments comprising the selected multimedia program are preferably arranged in a customized order at step **330**. In one embodiment, the multimedia server **30** includes a video parser **38** that preferably transforms the sequential program segments into a customized program segment series. The customized program segment series preferably includes an initial non-sequential series portion followed by a sequential series portion. A customized series may be comprised exclusively of non-sequentially ordered program segments **48** or, alternatively, may be comprised exclusively of sequentially ordered program segments.

The ordering of a customized program segment series is preferably dependent on a number of unique parameters associated with the configuration of a subscriber's set-top control system **62**. In response to a subscriber's configuration parameters, the controller **34** of the multimedia server **30** preferably determines the number of segment blocks (M) per disk surface (D), from which is derived the Block Indexing Coefficient, BI=modulo D×M, at step **332**. Further, the server controller **34**, at step **334**, preferably determines the length (L) of each of the segment blocks (M). It is noted that the length (L) of the segment blocks (M) preferably corresponds to the number of rows of each customized matrix comprising a segment block (M).

At step **336**, the server controller **34** preferably computes the size of the program segment packets, which is typically dependent on the size (IBS) of the input buffer **66** of a subscribing customer's set-top control system **62**. The input buffer **66** of a set-top control system **62** targeted to receive the program segment packets illustrated in FIG. **10**, for example, would preferably be configured to store a packet containing at least five program segments **48**. As discussed previously, it is preferable to configure the input buffer **66** to included sufficient memory to store at least twice the number of program segments **48** contained in the largest packet. Therefore, in this example, the input buffer **66** is preferably configured to store at least ten program segments **48**. At step **338**, the duration of the transmission window, within which each of the program segment packets is transmitted to a particular set-top control system **62**, is preferably computed by the server controller **34** in a manner previously discussed hereinabove. At step **340**, the program segments **48**, previously arranged as a customized series, are then read out of the video parser **38** and temporarily stored on a staging storage device **41** preferably arranged into packets, and then transmitted to the subscriber's set-top control system **62** by the distribution switch **42**, with each packet typically being transmitted to the communication channel **44** during each transmission window.

Turning now to FIGS. **10**, **20**, and **23**, there is depicted in greater detail the steps of one embodiment for effectuating a novel asynchronous DASD **68** formatting methodology. The set-top control system **62** formatting parameters transmitted by the multimedia server **30** are received by the subscriber's set-top control system **62** at step **350**. The formatting parameters are read by the set-top controller **64**, and preferably loaded into a memory coupled to the set-top controller **64**. The formatting parameters provide information preferably used by the set-top controller **64** to properly buffer and process the customized program segment packets received over the communication channel **44**. For example, the segment block (M) formatting parameter, determined at step **332**, is read by the set-top controller **64** which, in turn, preferably coordinates writing and reading of the program segments received from the multimedia server **30** to and from a corresponding number (M) of storage blocks of a predetermined length (L) defined on each of the disk surfaces (D) of the DASD **68**.

In this illustrative example, it is assumed that each of the program segments **48** depicted in the packets of FIG. **10** and at DASD **68** disk storage locations depicted in FIG. **20** is representative of a two-second, full-motion video portion of a selected multimedia program. It is also assumed that the input buffer **66** of the set-top control system **62** is configured to store at least five such program segments **48**, and that the program segments **48** will be buffered in a forty second presentation control window **90** (PTD=40 sec) formatted modulo-4 in two blocks (M=2) on each of two surfaces

(D=2) of a single disk **108**, with a block length of five program segments **48** (L=5). As shown in FIG. **20**, it is assumed that Block-A **53** and Block-B **55** are disposed on one surface of the disk **108**, and that Block-C **57** and Block-D **59** are disposed on the other disk **108** surface.

At step **351**, a customized program segment **48** series transmitted from the multimedia server **30** in packets over the communication channel **44** are received by the subscriber's set-top control system **62**. Generally, one packet is received during each multimedia server **30** transmission window, although multiple packets may be transmitted during this time if the input buffer **66** is sufficiently large. The first five non-sequential program segments contained in the first packet shown as Packet-**1** in FIG. **10** would be transmitted and received as the customized series: A**1**, A**5**, A**2**, A**6**, A**3**. These first five segments **48** are transferred to the input buffer **66** at step **352**. One important advantage of the novel asynchronous formatting methodology, as previously discussed, concerns the concurrent buffering and displaying of program segments **48** received from the multimedia server **30** to facilitate virtually instantaneous on-demand viewing of a selected multimedia program. As previously mentioned, a customized program segment series typically includes an initial non-sequentially ordered portion followed by a sequentially ordered portion. Depending on the format organization of the selected multimedia program, various non-sequential program segments **48** buffered in the input buffer **66** are transmitted concurrently to the DASD **68**, at step **354**, and to an output buffer **72** for subsequent decoding and displaying, at steps **356** and **358**. It is noted that, at steps **356** and **358**, it may be advantageous for synchronization purposes to transfer a number of non-sequential program segments **48** received from the communication channel **44** to a transfer buffer **70** prior to being transferred to the output buffer **72**.

In accordance with steps **356** and **358**, and as depicted in RUN-**1** shown in FIG. **20**, non-sequential program segment A**1** is transferred concurrently to both the DASD **68** for storage at Location-1 of Block-A **53**, at step **354**, and to the output buffer **72**, at step **356**. The set-top controller **64** then preferably coordinates the transfer of non-sequential program segment A**5** to the DASD **68** for storage at Location-2, at step **354**. The set-top controller **64** then coordinates the concurrent transfer of non-sequential program segment A**2** to both the DASD **68** for storage at Location-6 of Block-B **55**, at step **354**, and to the output buffer **72**, at step **356**. Accordingly, the output buffer **72** receives the program segments A**1** and A**2** in sequential order. The first two sequential program segments A**1** and A**2** are decoded by the decoder **74** and transmitted to the local display **76** at step **358**.

Continuing with the operations associated with RUN-**1**, non-sequential program segment A**6** is written to storage Location-7 of Block-B **55**, and the last segment A**3** of Packet-**1** is concurrently transferred to both the DASD **68** for storage at Location-11 of Block-C **57**, at step **354**, and to the output buffer **72**, at step **356**. Having completed only one-half of RUN-**1** and transferred each of the five program segments contained in Packet-**1** to the DASD **68**, Packet-**2** is received during the next transmission window and transferred to the input buffer **66**, at step **352**. It is noted that the DASD presentation control window **90** will not be filled in this example, as tested at step **364**, until completion of RUN-**3**. Packet-**2** is shown in FIG. **10** as containing program segments A**7**, A**4**, A**8**, A**9**, and A**13**, which are operated upon during RUN-1.5 that spans RUN-**1** and RUN-**2**. At step **354**, non-sequential program segment A**7** is transferred to the DASD **68** for storage at Location-12 of Block-C **57** followed by the concurrent transferring of segment A**4** to both the DASD **68** for storage at Location-16 of Block-D **59**, at step **354**, and to the output buffer **72**, at step **356**. At the end of RUN-**1**, it can be seen that the first four program segment of the multimedia program, segments A**1**, A**2**, A**3**, and A**4**, have been transferred to the output buffer **72** in sequential order.

As mentioned previously, the process of concurrently transferring non-sequential program segments **48** to both the DASD **68**, at step **354**, and the output buffer, at step **356**, preferably continues until such time as a received program segment **48** is transferred to the first storage location defined for each segment block, such as program segment A**1** at Location-1 of Block-A **53**, segment A**2** at Location-6 of Block-B **55**, segment A**3** at Location-11 of Block-C **57**, and segment A**4** at Location-16 of Block-D **59** shown in FIG.

The orchestrated concurrent transferring of program segments **48** to both the DASD **68** and the output buffer **72** and decoder **74** thus provides for virtually instantaneous presentation of a selected multimedia program on a subscribing customer's television **76**. The program segments **48** contained in subsequently received Packet-**3** and Packet-**4** are transferred to storage locations on the DASD **68** in a manner respectively depicted in RUN-**2** and RUN-**3**, thereby filling the twenty storage locations of the presentation control window **90**. After receiving a predetermined number of initial non-sequential program segments **48**, twenty in this example, and storing same in the presentation control window **90** buffer on the DASD **68**, as tested at step **364**, a novel update-in-place procedure is then performed at step **366** as discussed in greater detail hereinbelow.

At step **360**, the set-top controller **64** preferably monitors the state of the input buffer **66** and, if an overflow condition is imminent, preferably transmits a control signal to the multimedia server **30** to request temporary halting of the transmission of program segment packets at step **362**. It is noted that an input buffer **66** overflow condition should generally not occur during periods of normal program viewing since the transmission and reception of program segment packets is synchronized by transferring packets during prescribed transmission windows. Various presentation control window **90** function modes, such as a pause mode, for example, will typically result in the transmission of a halt control signal from the set-top control system **62** to the multimedia server **30**. The remaining program segments **48** contained in Packet-**1** and stored in the input buffer **66**, for example, are transferred to the DASD **68** during halting of additional packet transmissions in order to remedy an impending overflow condition, at step **354**.

Still referring to FIG. **23**, a significant advantage concerning the novel asynchronous formatting methodology provides for the concurrent writing and displaying of program segments **48** transferred to and from the multimedia DASD **68**. After the initial sequential program segments are displayed at steps **356** and **358**, such as segments A**1**, A**2**, A**3**, and A**4**, the novel formatting methodology disclosed herein provides for the reading of program segments **48** asynchronously buffered in the DASD **68** as sequential program segments at step **372**. The sequential program segments **48** read from the DASD **68** are transferred to the output buffer **72**, at step **374**, decoded by the decoder **74**, and then transmitted to the local display **76**, at step **376**.

Turning now FIGS. **10**, **20**, and **24–26**, there is depicted in greater detail the steps of one embodiment for effectuating a novel update-in-place procedure of step **366**. It is assumed that the presentation control window **90** has been filled after completion of RUN-**3**, that the last sequential program

segment A12 has been read from Location-18 during RUN-3 and displayed on the customer's television 74, and that the operations described in FIGS. 24–26 are associated with successive runs beginning with RUN-4. It is further assumed that Packet-5 containing program segments A21, A22, A23, and A24 has been received and transferred to the input buffer 66. In the embodiment depicted in FIGS. 24–26, the actuator 118 of the DASD 68 is preferably moved to an outer spiral diameter location (OSDL) 196 of the lower spiral track 110 of the data storage disk 108 at step 400. At step 402, the lower transducer preferably spirals inwardly to the first lower block (M_{LN}), Block-A 53. At step 404, the next newly received program segment, segment A21, is written to the storage location in the first lower block, Block-A 53, containing the oldest program segment 48 stored in Block-A 53, which corresponds to previously stored segment A1 at Location-1. At step 406, the next sequential program segment 48 stored in the first lower block, Block-A 53, which corresponds to program segment A13, is read from Location-4, and decoded and then displayed at step 410 on the customer's television 76 in sequence with respect to the previously read and displayed program segment A12. The actuator 118 and lower transducer 117, at step 408, continue to traverse inwardly preferably along the centerline of the lower spiral data track 110.

If other program segment storage blocks are provided on the lower disk surface (M_{LN+1}), the overwriting, reading, decoding and display steps 404, 406, and 410 are repeated for the next lower block, such as Block-B 55. After overwriting previously stored program segment A2 at Location-6 of Block-B 55 with newly received segment A22, and reading the next sequential segment A14 from Location-9 of Block-B 55, the actuator 118 and lower transducer 117 traverse the lower spiral track 110 until an inner spiral diameter location (ISDL) 198 is reached, at step 412. A head switch is performed at the ISDL 198 to activate the upper transducer 116 at step 416.

Referring now to FIG. 25 and step 422, actuator 118 and upper transducer 116 begin to traverse outwardly along the upper spiral track 111 to the first upper program segment storage block (M_{UN}), such as Block-C 57. At step 424, the next newly received program segment, segment A23, is written to the storage location in Block-C 57 containing the oldest program segment 48 stored in Block-C 57, which corresponds to previously stored segment A3. At step 426, the next sequential program segment 48 stored in Block-A 53, which corresponds to program segment A15, is read from Location-14, and decoded and then displayed at step 430 on the customer's television 76 in sequence with respect to the previously read program segment A14. The actuator 118 and upper transducer 116, at step 428, continue to traverse outwardly preferably along the centerline of the upper spiral data track 111. If other program segment storage blocks (M_{UN+1}) are provided on the upper disk surface, the overwriting, reading, decoding and display steps 424, 426, and 430 are repeated for the next upper block, such as Block-D 59.

After overwriting previously stored program segment A4 at Location-16 of Block-D 59 with newly received segment A24, and reading the next sequential segment A16 from Location-19 of Block-D 59, the actuator 118 and upper transducer 116 traverse the upper spiral track 111 until the OSDL 196 is reached, at step 432. Another head switch is performed at the OSDL 196 to activate the lower transducer 117 at step 436. The novel update-in-place procedure is then repeated for subsequent runs, as at step 438. It can be appreciated that this update procedure provides for writing of new program segments 48 into the presentation control window 90 buffer, reading of previously stored program segments 48 from the presentation control window 90 buffer in a sequential order, and overwriting previously stored program segments 48.

Another feature of the novel presentation control window 90 provides for the erasure of the contents of a presentation control window 90 associated with a previously viewed pay-per-view multimedia program. The erasure procedure may also be performed in connection with a presentation control window 90 reconfiguration procedure which may be desirable during the on-going transmission of a multimedia program currently being viewed. Generally, after viewing a multimedia program, the storage locations defining a presentation control window 90 buffer will contain program segment data of the previously viewed program. Prior to receiving the program segment data for a subsequently ordered multimedia program, each of the presentation control window 90 storage locations may be erased by applying a d.c. current or single frequency signal to the write element of the transducer as it passes over the storage locations.

Alternatively, a selective erasure procedure may instead be employed by which selected storage locations are erased while others are overwritten using newly received program segments associated with a newly ordered multimedia program. For example, it is assumed that each of the twenty storage locations depicted in FIG. 20 contain a program segment of a previously viewed multimedia program. It is further assumed that the first two packets, Packet-1 and Packet-2 shown in FIG. 10, have been received by the input buffer 66 which is assumed to be configured to store at least ten two-second compressed program segments 48. During RUN-1, segments A1 and A5 are initially respectively stored at Location-1 and Location-2 of Block-A 53. It is noted that in this example, Location-3, Location-4, and Location-5 contain program segments associated with the previously viewed multimedia program. An erase signal is preferably applied to the transducer as Location-3, Location-4, and Location-5 spiral into proximity with the write element of the transducer, thus erasing these storage locations rather than merely skipping these storage locations. This selective erasure procedure is preferably performed until the presentation control window 90 buffer is filled with program segments associated with the newly ordered multimedia program.

Turning now to FIG. 26, a novel spiral-and-hold procedure is illustrated in flow chart form. At step 472, the set-top controller 64 preferably monitors the status of the output buffer 72. Upon initiation of a pause command by a subscriber, at step 474, or an operation in which the output buffer 72 may be subject to an imminent overflow condition, at step 476, a novel spiral-and-hold procedure is preferably executed. Initially, at step 478, the position error offset ramp signal added to the constant position error signal and transmitted to the actuator servo control to effectuate spiral track following is discontinued. Accordingly, only the constant position error signal is transmitted to the actuator servo control to maintain the actuator and transducers in a concentric track following mode, as at step 480. A concentric track following mode preferably continues until the overflow condition of the output buffer 72 is remedied or the pause command initiated by a subscriber is terminated at step 482. The position error offset ramp signal is added to the constant position error signal, at step 484, and transmitted to the actuator servo control to resume spiral track following. The transfer of program segments to the output buffer 72 then resumes, at 486, and normal operation continues, at step 488.

It will, of course, be understood that various modifications and additions can be made to the embodiments discussed hereinabove without departing from the scope or spirit of the present invention. Accordingly, the scope of the present invention should not be limited to the particular embodiments discussed above, but should be defined only by the claims set forth below and equivalents of the disclosed embodiments.

We claim:

1. A server system for communicating multimedia programming to a distantly situated local media control system over a communication channel, the server system comprising:

a mass storage library for storing a plurality of multimedia programs, the multimedia programs being segmented into source program segments, and each of the source program segments representing a multimedia program portion;

an organizing unit that arranges the source program segments of a selected multimedia program into a custom ordered series of source program segments including non-sequentially ordered source program segments and sequentially ordered source program segments;

a transmission unit that transmits the source program segments of the custom ordered series to the communication channel;

a server controller that communicates with the local media control system and receives a configuration signal from the local media control system over the communication channel, the configuration signal being representative of configuration parameters associated with the local media control system; and

the organizing unit, in response to the configuration signal, organizing the source program segments into the custom ordered series of source program segments in accordance with the configuration parameters.

2. A system as claimed in claim **1**, wherein:

the server system further comprises a coder that codes the source program segments defining the plurality of multimedia program stored in the mass storage library in accordance with a predetermined coding standard.

3. A system as claimed in claim **1**, wherein the mass storage library includes either one of a digital storage device and a dynamic random access storage device for respectively storing the plurality of multimedia programs.

4. A system as claimed in claim **1**, further comprising a segmenting unit that segments each of the plurality of multimedia programs into a corresponding series of sequentially ordered source program segments.

5. A system as claimed in claim **1**, further comprising an indexing unit that associates a unique segment address with each of the source program segments.

6. A system as claimed in claim **1**, further comprising a staging storage device, coupled to the organizing unit and the transmission unit that stores the custom ordered series of source program segments received from the organizing unit.

7. A system as claimed in claim **1**, wherein the transmission unit transmits the source program segments arranged in packets to the communication channel, each of the packets comprising no greater than a predetermined maximum number of the source program segments.

8. A system as claimed in claim **1**, wherein the transmission unit transmits the source program segments arranged in packets to the communication channel during transmission windows having a predetermined duration.

9. A system as claimed in claim **8**, wherein the predetermined duration of the transmission windows is associated with the number of the source program segments arranged in the packets and the portion of the selected multimedia program represented by each of the source program segments arranged in the packets.

10. A system as claimed in claim **1**, wherein the transmission unit comprises an asynchronous transmission mode switching unit that transmits a plurality of custom ordered series of source program segments representative of a corresponding plurality of multimedia programs asynchronously to a plurality of distantly situated local media control systems over the communication channel.

11. A server system for communicating multimedia programming to a distantly situated local media control system over a communication channel, the server system comprising:

a mass storage library for storing a plurality of multimedia programs each segmented into source program segments, each of the source program segments including a unique segment address and being representative of a portion of one of the plurality of multimedia programs;

an organizing device that arranges the unique segment addresses of source program segments associated with the one of the plurality of multimedia programs to produce a custom ordered series of source program segments;

a transmission device that transmits the custom ordered series of source program segments arranged in packets to the communication channel; and

wherein the organizing device arranges the unique segment addresses to produce a custom ordered series of source program segments including non-sequentially ordered source program segments.

12. A system as claimed in claim **11**, further comprising a segmenting device that segments each of the plurality of multimedia programs into a corresponding series of sequentially ordered source program segments.

13. A system as claimed in claim **11**, wherein the mass storage library includes either one of a digital storage device and a dynamic random access storage device for respectively storing the plurality of multimedia programs.

14. A system as claimed in claim **11**, further comprising a staging storage device, coupled to the organizing device and the transmission device, for storing the custom ordered series of source program segments received from the organizing device.

15. A method for communicating a multimedia program from a remote multimedia server to a local media control system, the method comprising:

organizing sequentially ordered source program segments representative of the multimedia program into a custom ordered series of source program segments, the custom ordered series comprising non-sequentially ordered and sequentially ordered source program segments, and each program segment representing a unique portion of the multimedia program;

transmitting the source program segments of the custom ordered series to a communication channel; and

wherein the transmitting step includes the further step of transmitting the source program segments of the custom ordered series arranged in packets to the communication channel during transmission windows having a predetermined duration.

16. A method as claimed in claim **15**, including the further step of segmenting the multimedia program into the sequentially ordered source program segments.

17. A method as claimed in claim **15**, including the further step of selecting the multimedia program from a plurality of multimedia programs.

18. A method as claimed in claim **15**, including the further step of coding the sequentially ordered source program segments in accordance with a predetermined coding standard.

19. A method as claimed in claim **15**, wherein the predetermined duration of the transmission windows is associated with the number of source program segments arranged in the packets and the portion of the multimedia program represented by each of the source program segments arranged in the packets.

20. A method as claimed in claim **15**, wherein the transmitting step includes the further step of transmitting the source program segments of the custom ordered series to the communication channel in accordance with an asynchronous transfer mode transmission methodology.

* * * * *