UNITED STATES PATENT AND TRADEMARK OFFICE
BEFORE THE PATENT TRIAL AND APPEAL BOARD

DENTSPLY SIRONA INC.
Petitioner

v.

OSSEO IMAGING, LLC.
Patent Owner

U.S. PATENT NO. 6,381,301
IPR2025-00771

DECLARATION OF DR. MILAN SONKA, PH.D.

Mail Stop: Patent Board
Patent Trial and Appeal Board
U.S. Patent and Trademark Office
P.O. Box 1450
Alexandria, VA 22313-1450

TABLE OF CONTENTS

I. INTRODUCTION 1

II. QUALIFICATIONS AND EXPERIENCE 2

III. COMPENSATION AND RELATIONSHIP TO THE PARTIES 10

IV. LEGAL STANDARDS 11
- B. Priority Date 11
- C. Claim Construction 12
- D. Means-Plus-Function Claiming Under 35 U.S.C. § 112 ¶ 6 13
- E. Anticipation 15
- F. Obviousness 15
- G. Person of Ordinary Skill in the Art 18

V. BACKGROUND 20
- A. X-ray Imaging 22
- B. Tomography 24
- C. Transverse tomography 25
- D. Computed tomography (CT) 26
- E. Single vs. Dual Energy Imaging 34
- F. Three-Dimensional Modeling 35
- G. Fiducial Markers 36
- H. Densitometry 37
- I. The Role of Comparison in Medical Imaging 38

VI. OPINIONS REGARDING CLAIM CONSTRUCTION 39
- A. District Court Constructions 39
- B. Constructions of Additional Terms 43

VII. THE ’374 PATENT 47
- A. Background of the Invention and Related Art Described in the ’374 Patent 47
- B. The Claims of the ’374 Patent 53

VIII. THE ’301 PATENT 59
- A. Background of the Invention and Related Art Described in the ’301 Patent 59
- B. The Claims of the ’301 Patent 61

IX. THE ’262 PATENT 68
- A. Background of the Invention and Related Art Described in the ’262 Patent 68

B. The Claims of the ’262 Patent 75

X. SUMMARY OF THE PRIOR ART 77
A. Arai 77
B. Cann 84
C. Pelc 87
D. Rothman 97
E. Xu 100
F. Milestone 106
G. Pelc ’080 109

XI. DETAILED OPINIONS REGARDING INVALIDITY GROUNDS OF THE ’374 PATENT 111
A. Anticipation by and Obviousness Over Arai 111
B. Anticipation by and Obviousness over Pelc 146

XII. DETAILED OPINIONS REGARDING INVALIDITY GROUNDS OF THE ’301 PATENT 171
A. Arai 171
B. Pelc 203

XIII. DETAILED OPINIONS REGARDING INVALIDITY GROUNDS OF THE ’262 PATENT 233
A. The Addition of Electron Beam Sources/Sensors to the ’262 Patent 233
B. Massie Publication 235
C. Arai 249
D. Pelc 271

TABLE OF AUTHORITIES

Page(s)

Cases

J. Istanb. Univ. Fac. Dent.
5151(3 Suppl 1): S102-21 (2017) 32

Osseo Imaging, LLC v. Planmeca USA Inc.,
1-17-cv-01386 (D. Del. 2017) 13, 39

Statutes

35 U.S.C. § 102 73

35 U.S.C. § 103 74

35 U.S.C. § 112 ..... 13, 14

Other Authorities

21 C.F.R. § 1020.31 ..... 123, 153, 213, 271, 287

EXHIBIT LIST

No.	Description
Ex. 1001	U.S. Patent No. 8,498,374 (the "'374 patent").
Ex. 1002	U.S. Patent No. 6,381,301 (the "'301 patent").
Ex. 1003	U.S. Patent No. 6,944,262 (the "'262 patent").
Ex. 1004	U.S. Patent No. 8,498,374 (the "'374 patent") Prosecution History.
Ex. 1005	U.S. Patent No. 6,381,301 (the "'301 patent") Prosecution History.
Ex. 1006	U.S. Patent No. 6,944,262 (the "'262 patent") Prosecution History.
Ex. 1007	Declaration of Dr. Milan Sonka, Ph.D.
Ex. 1008	Curriculum Vitae of Dr. Milan Sonka, Ph.D.
Ex. 1009	Markman Order, Dkt. 46, *Osseo Imaging, LLC v. Planmeca USA Inc.*, 1-17-cv-01386 (D. Del. 2017).
Ex. 1010	Markman Memorandum, Dkt. 44, *Osseo Imaging, LLC v. Planmeca USA Inc.*, 1-17-cv-01386 (D. Del. 2017).
Ex. 1011	Markman Transcript, Dkt. 41, *Osseo Imaging, LLC v. Planmeca USA Inc.*, 1-17-cv-01386 (D. Del. 2017).
Ex. 1012	Summary Judgement Hearing Transcript, Dkt. 143, *Osseo Imaging, LLC v. Planmeca USA Inc.*, 1-17-cv-01386 (D. Del. 2017).
Ex. 1013	U.S. Patent No. 6,118,842 ("Arai").
Ex. 1014	Cann, et al., "Precise Measurement of Vertebral Mineral Content Using Computed Tomography," *Journal of Computer Assisted Tomographs* 4(4) 493–500 (August 1980) ("Cann").
Ex. 1015	International Publication No. WO 94/10908 ("Pelc").
Ex. 1016	Stephen L.G. Rothman, DENTAL APPLICATIONS OF COMPUTERIZED TOMOGRAPHY: SURGICAL PLANNING FOR IMPLANT PLACEMENT (Quintessence Books 1998) ("Rothman").

No.	Description
Ex. 1017	International Publication WO 01/39667 ("Massie").
Ex. 1018	U.S. Patent No. 5,533,080 ("Pelc 080").
Ex. 1019	U.S. Patent No. 6,363,163 ("Xu").
Ex. 1020	International Publication WO 98/36683 ("Milestone").
Ex. 1021	Jerrold T. Bushberg, THE ESSENTIAL PHYSICS OF MEDICAL IMAGING (Williams & Wilkins 1994) ("Bushberg").
Ex. 1022	Genant *et al.*, "Bone Densitometry: Current Assessment," *Osteoporosis International* S:91–97 (1993) ("Genant 1993").
Ex. 1023	Genant *et al.*, "Current State of Bone Densitometry for Osteoporosis," *Radiographics* 18(4):913–918 (1998) ("Genant 1998").
Ex. 1024	U.S. Patent No. 5,214,686 ("Webber").
Ex. 1025	21 C.F.R. § 1020.31 (April 1998).
Ex. 1026	U.S. Patent No. RE 36,162 ("Bisek").
Ex. 1027	U.S. Patent No. 6,243,439 ("Arai 439").
Ex. 1028	Godfrey N. Hounsfield, "Computed Medical Imaging," Nobel Lecture (Dec. 8, 1979), *available at* https://www.nobelprize.org/uploads/2018/06/hounsfield-lecture.pdf.
Ex. 1029	Grant, "TOMOSYNTHESIS: A Three-Dimensional Radiographic Imaging Technique," *IEEE Transactions on Biomedical Engineering*, BME-19(1):20–28 (Jan. 1972) ("Grant").
Ex. 1030	U.S. Patent No. 6,073,044 ("Fitzpatrick").
Ex. 1031	Hosie *et al.*, "A Gamma Ray Computed Tomography Scanner for the Quantitative Measurement of Bone Density," *Journal of Biomedical Engineering* 7:30–34 (Jan. 1985) ("Hosie").

No.	Description
Ex. 1032	World Health Organization, "Assessment of Fracture Risk and Its Application to Screening for Postmenopausal Osteoporosis," WHO Technical Report Series 843 (1994) ("WHO 94").
Ex. 1033	Venkatesh *et al.*, "Cone Beam Computed Tomography: Basics and Applications in Dentistry," *Journal of Istanbul University Faculty of Dentistry*, 51(3 Suppl 1): S102-121 (December 2017) ("Venkatesh").
Ex. 1034	Summary Judgment Answering Brief in Opposition, Dkt. 131, *Osseo Imaging, LLC v. Planmeca USA Inc.*, 1-17-cv-01386 (D. Del. 2017).
Ex. 1035	Mozzo *et al.*, "A new volumetric CT machine for dental imaging based on the cone-beam technique: preliminary results," *Eur. Radiol.*, 8: 1558-64 (1998) ("Mozzo").
Ex. 1036	Noo *et al.*, "Stable and Efficient Shift-Variant Algorithm for Circle-Plus-Lines Orbits in Cone-Beam C.T.," *Institute of Electrical and Electronics Engineers*, Conference Date: Sept. 19, 1996 ("Noo").
Ex. 1037	Lindh *et al.*, "Quantitative computed tomography of trabecular bone in the mandible," *Dentomaxillofacial Radiology*, 25:146–150 (1996) ("Lindh").
Ex. 1038	Sonka, M., & Fitzpatrick, J. M. (Eds.). (2000). *Handbook of medical imaging, volume 2: Medical image processing and analysis.* SPIE Press. ("SPIE")

I, Dr. Milan Sonka, Ph.D., declare as follows:

I. INTRODUCTION

1. I have been retained by Dentsply Sirona Inc. "Dentsply" to provide opinions relating to the filing of Petitions for *Inter Partes* Review of U.S. Patent No. 8,498,374 ("the '374 patent") (Ex. 1001), U.S. Patent No. 6,381,301 ("the '301 patent") (Ex. 1002), and U.S. Patent No. 6,944,262 ("the '262 patent") (Ex. 1003). The opinions presented here are my own.

2. The '374 patent contains claims that recite dental and orthopedic densitometry modeling systems.

3. The '301 patent contains claims that recite systems and methods for tomographically modeling dental and orthopedic structure densitometry.

4. The '262 patent contains claims that recite digital modeling systems for creating dental or orthopedic models of patients.

5. I have been asked to prepare this declaration explaining the reasons and bases for my opinions that claims 1–24 of the '374 patent, claims 1–8 and 10–20 of the '301 patent, and claims 1, 2, 4, and 6 of the '262 patent are unpatentable. As discussed below, I have concluded that these claims are anticipated or would have been obvious to the person of ordinary skill in the art at the time of the alleged invention in light of: U.S. Patent No. 6,118,842 ("Arai") (Ex. 1013); Christopher Cann, "Precise Measurement of Vertebral Mineral Content Using

Computed Tomography," Journal of Computer Assisted Tomography 4(4) 493–500 (August 1980) ("Cann") (Ex. 1014); International Publication No. WO/94/10908 ("Pelc") (Ex. 1015); Stephen Rothman, DENTAL APPLICATIONS OF COMPUTERIZED TOMOGRAPHY: SURGICAL PLANNING OF IMPLANT PLACEMENT (Quintessence Books 1998) ("Rothman") (Ex. 1016); International Publication No. WO 01/39667 ("Massie") (Ex. 1017); U.S. Patent No. 5,533,080 ("Pelc '080") (Ex. 1018); U.S. Patent No. 6,363,163 ("Xu") (Ex. 1019); and International Publication No. WO 98/36683 ("Milestone") (Ex. 1020).

6. In reaching my opinions, I relied on the documents cited herein and on my decades of knowledge and experience in the field of medical image analysis and radiology (outlined in Section II).

7. This report is based on information currently available to me. I reserve the right to supplement my opinions in response to arguments raised by Osseo Imaging LLC ("Osseo") or in response to any additional information that becomes available to me.

II. QUALIFICATIONS AND EXPERIENCE

8. My qualifications for forming the opinions set forth in this report are summarized in the following paragraphs and explained in more detail in my curriculum vitae, which is attached as Exhibit 1008.

9. I am a Professor of Electrical & Computer Engineering, a Professor of Ophthalmology & Visual Sciences, and a Professor of Radiation Oncology. I am an IEEE Fellow, an AIMBE Fellow, a MICCAI Fellow, and Fellow of the National Academy of Inventors.

10. I earned a Ph.D. degree in Technical Cybernetics, with a specialty in Digital Image Analysis, from Czech Technical University of Prague, Czechoslovakia in 1983 and a Master of Science in Electrical Engineering with a specialty in Technical Cybernetics from the same University in 1979.

11. My first position was as an Assistant Professor in the Department of Control Engineering at the Czech Technical University of Prague, Czechoslovakia. I held that position from 1984 to 1990. In 1990, I accepted a position as a Visiting Assistant Professor in the Department of Electric and Computer Engineering at the University of Iowa. In 1994, I became an Associate Professor in the same department.

12. I was the Founding Co-Director of the Iowa Institute for Biomedical Imaging and I have maintained that position since 2007. I have been serving as the Institute's Director from 2010 to 2016. I currently serve as co-director of this institute. I have been founding Director of the Iowa Initiative for Artificial Intelligence since 2019. I continue serving in that role.

13. From 2008 to 2014, I served as the Chair of the Department of Electrical & Computer Engineering at the University of Iowa. From 2014 to 2019, I was appointed Associate Dean for Research, Graduate Studies, and Faculty of the College of Engineering at the University of Iowa. Starting 2019, I've served as Director of the university-wide Iowa Initiative for Artificial Intelligence.

14. My research interests include medical imaging and knowledge-based image analysis with emphasis on cardiovascular, pulmonary, orthopedic, cancer, and ophthalmic image analysis. I am the first author of four editions of *Image Processing, Analysis and Machine Vision* (1993, 1998, 2008, and 2014). During 1998 and 1999, I was on the editorial board preparing a 3-volume Handbook of Medical Imaging (published by SPIE in January 2000) and I served as editor of its 1200-page long Volume 2: Medical Image Processing and Analysis. This Handbook is a comprehensive reflection of the state of the art in medical imaging at the time of its preparation – I am referencing this Handbook at several places below. I am also co-editor of a very recent and comprehensive book "Medical Image Analysis" (2024). I co-authored or co-edited 20 books/proceedings. I have published more than 230 journal papers and over 450 other publications. I am the past Editor-in-Chief of the IEEE Transactions on Medical Imaging and member of the Editorial Board of the Medical Image Analysis journal. To bring results of this research work to clinical practice, I have co-founded two medical imaging

companies— Medical Imaging Applications LLC, and VIDA Diagnostics Inc. I am also a co-inventor on 18 patents, most of which relate to medical image processing and analysis.

15. Around, and prior to, the 1999 time frame, my research was directed primarily at development of image processing and analysis methods for processing digital image data from meteorological satellites, digital texture images, medical images from X-ray angiography, intravascular ultrasound, transthoracic ultrasound, magnetic resonance, and X-ray CT.

16. The developed methods were published in top-ranked journals, including *IEEE Transactions on Medical Imaging, IEEE Transactions on Biomedical Engineering, Journal of Electronic Imaging,* and *Computer Vision and Image Understanding.* Many of my pre-1999 published papers are strongly cited by others, and all of my pre-1999 image processing research represented novel approaches to image processing and analysis and advanced the field of general digital or specifically medical image processing and analysis.

17. My publications, according to Google Scholar, have been cited more than 51,000 times. For example, my *Image Processing, Analysis, and Machine Vision* book has been cited more than 11,000 times, 35 publications were cited more than 200 times each, and a total of 72 publications received more than 100 citations each. My publication h-index is 87— meaning that 87 publications were

cited at least 87 times each. The very strong citation record demonstrates the value of my publications to the field.

18. Most of the areas of my research include two separate parts. The first part is theoretical description of the developed novel image analysis approaches, methods, and applications - and the second part is the performance assessment obtained by software implementation of the algorithmic processing approach. As such, each of the published methods was accompanied by a developed program environment that formed a software architectural system.

19. My software architecture development and expertise can be traced to my early publications, such as the article titled “Image Processing Software — programming environment for general-purpose image processing,” “Minicomputer Image Processing Software System IMG,” “Image Analysis System IMG,” “Image Processing System of DIGITES 2C, Design,” and “Image Analysis System for Personal Computers.” These software-architectural environments were developed in Fortran, C, and C++ programming languages. My contributions to medical image analysis can be put in several categories:

20. Quantitative Assessment of Cardiovascular Disease relied on several breakthrough approaches, for example: Coronary border detection, the first method reported in literature that determines both coronary borders simultaneously. Introduction of this idea improved the segmentation success rate in clinical

angiograms four-fold. The only existing brachial ultrasound segmentation method was developed that uses patient-specific border detection quality control to automatically identify and discard non-reliable measurements. This method has been successfully commercialized and is used in more than 400 leading cardiovascular research laboratories around the world.

21. I developed methodologies for separation of arteries and veins, vessel labeling, and quantitation of disease in image data sets from contrast-enhanced magnetic resonance angiography. Development of a 2D+time Active Appearance Motion Model (AAMM) representing cardiac cycle dynamics in combination with the shape and specific imaging modality appearance of the heart. This method shows high promise for successful application to clinical MR and echocardiography image sequence analysis in clinical setting. I developed a 3D Active Appearance Motion and 3D Spatial Model with application to volumetric cardiac MR and transthoracic echo image data. I also developed methods for 3D and 4D analysis of aortic MR and CT datasets, methods for wall thickness, and plaque type analysis from X-ray CTA data. I further developed methods for simultaneous detection of multiple surfaces in intracoronary IVUS and OCT image pullbacks, machine learning methods for prediction of vulnerable plaque types in coronary IVUS, methods for assessment of thin-cap fibroatheroma from IVUS and OCT.

22. Medical Image Segmentation benefitted from a novel family of general-purpose and application-flexible approaches: Graph-based determination of cortical thickness in human brain MR images. For example, segmentation of airway trees from 3D CT images. Three generations of methods were developed with increasing performance. The first-generation approach used decision rules, the second was based on manually-designed fuzzy rules and fuzzy membership functions, the third generation was automatically designing the fuzzy rules and membership functions from examples. I developed segmentation and characterization of lung nodules from pulmonary CT scans. This pulmonary tissue characterization approach was developed as the first approach for local characterization of pulmonary parenchyma (U.S. Patent No. 6,466,687). I developed quantitative analysis of ovarian ultrasound images.

23. I also developed automated design of border detection criteria from manually traced border examples, a self-learning border property identification method that minimizes the need for manual design of border detection functions. This approach was successfully incorporated in our brachial ultrasound segmentation described above and showed the performance comparable to that achieved by tedious manual design of segmentation criteria in comparison with our previously developed single-purpose methods. Development of computer-assisted methods for surgical planning of liver tumor resection; automated segmentation of

the lower thoracic cavity, liver, liver tumor; and identification of the vascular trees, interactive surgical planning and quantitative outcome assessment tools are being built to assist in the clinical decision making process. I developed novel 3D image analysis techniques, including parallel 3D skeletonization, 3D smoothing without shrinkage, and 3D edge detection in anisotropic image data. I also developed new optimal 3-D, 4-D, ..., n-D graph-search method for detection of multiple mutually interacting surfaces in n-D image data, producing results in low-polynomial time.

24. Ophthalmic and Pulmonary Image Analysis are some of my most recent areas of research interest. For Ophthalmic image analysis, my work has included multi-layer segmentation of 3D retinal OCT images. I have been awarded U.S. patents in the field of — up to 11 layers are reliably segmented for the macular as well as peripapillary OCT scans. This includes analysis of structure-function relationship between retinal layer morphology and visual function, and segmentation of SEADs — symptomatic exudate-associated derangements of the retina in presence of age-related macular degeneration and diabetic macular edema. My research also includes early detection of retinal changes on diabetic retinopathy, image-guided therapy development for age-related macular degeneration, and image analysis of optic nerve head morphology for quantitative assessment of glaucoma. For Pulmonary image analysis, I developed approaches for 3D segmentation of pulmonary airway trees. For example, analysis of airway

wall in complete intrathoracic trees and across bifurcations, identification of pulmonary fissures, contributing to segmentation of lung lobes, separation of arteries and veins in pulmonary vasculature, and automated labeling of airway tree segments according to the international nomenclature.

25. I have received more than $30 million in research funds as principal investigator, most from the National Institutes of Health to support my research on medical image analysis. My scholarship and leadership in machine learning and medical image analysis are well established. In general, I have a broad knowledge of image processing, a solid grounding in the specific technologies employed by imaging systems, a historical perspective based on active personal participation in the medical image processing industry, and experience with the patent process.

III. COMPENSATION AND RELATIONSHIP TO THE PARTIES

26. With respect to this matter, I am an independent consultant which is being compensated at my standard hourly rate, plus expenses, for the time I spend working on this matter. I am an independent party and my compensation is not contingent upon the outcome of this matter.

27. I have been informed that Osseo Imaging, LLC ("Osseo") is the assignee of the '374, '301, and '262 patents. I have had no prior dealings with Osseo.

28. Prior to my engagement in the present case, I have never worked as a consultant for Dentsply and have never been adverse to Dentsply in any proceeding. I am aware of no financial interest I have relating to Dentsply or Osseo.

IV. LEGAL STANDARDS

29. Although I am not an attorney and do not expect to offer any opinions regarding the law, I have been informed of certain legal principles that I relied on in forming the opinions set forth in this report.

B. Priority Date

30. I have been asked to assume that the priority date of the ’374 patent is December 1, 1999.

31. I have been asked to assume that the priority date of the ’301 patent is December 1, 1999.

32. I understand that there is a dispute about the priority date of the ’262 patent. I understand that Dentsply contends it is January 24, 2003. Alternatively, I understand that Osseo contends that the priority date of the ’262 patent is December 1, 1999. With the exception of my opinions regarding invalidity of the ’262 patent by the Massie Publication, my opinions are not dependent on which priority date is assumed. The only difference with respect to my opinions regarding the Massie Publication is that I understand that it is prior art if the ’262

patent's priority date is January 24, 2003, while it would not be prior art if the '262 patent's priority date is December 1, 1999.

C. Claim Construction

33. I understand that the words of a claim are generally given their ordinary and customary meaning. I understand the ordinary and customary meaning of a claim term is the meaning that the term would have to a person of ordinary skill in the art in question at the time of the invention. I understand the person of ordinary skill in the art is deemed to read the claim term not only in the context of the particular claim in which the disputed term appears, but in the context of the entire patent, including the specification.

34. I understand claim construction focuses on the "intrinsic evidence," which consists of the claims themselves, the specification, and the prosecution history. I understand the claims can provide helpful context for how the claim term is used. I understand the specification is highly relevant to the claim construction analysis and usually dispositive concerning the meaning of a claim term.

35. I understand that "extrinsic evidence" may also be considered when determining the meaning of a claim. I understand there are different sources of extrinsic evidence, including dictionaries, inventor testimony, expert testimony, and learned treatises. I understand that intrinsic evidence is generally favored over

extrinsic evidence, and that extrinsic evidence may not be used to contradict the meaning of the claim when read light of the intrinsic evidence.

36. I understand there are two exceptions to the general rule that claims are given their ordinary and customary meaning as understood by a person of ordinary skill in the art when read in the context of the specification and prosecution history, referred to as lexicography and disavowal. I understand that to act as its own lexicographer, a patentee must clearly set forth a definition of the claim term that is different than its plain and ordinary meaning, and clearly express an intent to redefine the term. I understand that disavowal requires a clear and unmistakable disclaimer of claim scope, such as the specification or prosecution history making clear that the invention does not include a particular feature, or that it is limited to a particular embodiment of the invention.

37. I further understand that the United States District Court for the District of Delaware construed a number of claim terms in *Osseo Imaging, LLC v. Planmeca USA Inc.*, 1-17-cv-01386 (D. Del. 2017). I have applied these constructions in my analysis of the ’374, ’262, and ’301 patents.

D. Means-Plus-Function Claiming Under 35 U.S.C. § 112 ¶ 6

38. I understand that means-plus-function claiming occurs when a claim term is drafted in a manner that invokes 35 U.S.C. § 112 ¶ 6, which states: “An element in a claim for a combination may be expressed as a means or step for

performing a specified function without the recital of structure, material, or acts in support thereof, and such claim shall be construed to cover the corresponding structure, material, or acts described in the specification and equivalents thereof."

39. I understand that this statute is intended to allow patentees to express a claim limitation by reciting a function to be performed rather than by reciting structure for performing that function, while restricting the scope of coverage to only the structure, materials, or acts described in the specification as corresponding to the claimed function and equivalents thereof.

40. I understand that use of the word "means" in a claim term creates a rebuttable presumption that § 112 ¶ 6 applies to the term. I also understand that the absence of the word "means" creates a rebuttable presumption that § 112 ¶ 6 does not apply to the term. I further understand, however, that the latter presumption is not considered a "strong" or "heavy" presumption. The latter presumption can be overcome if the challenger demonstrates that the claim term fails to recite sufficiently definite structure or else recites function without reciting sufficient structure for performing that function. I understand generic terms such as module, mechanism, element, device, and other nonce words that reflect nothing more than verbal constructs may be used in a claim in a manner that is tantamount to using the word means because they typically do not connote sufficiently definite structure.

41. To the extent the Delaware Court has construed means-plus-function limitations, I rely on the Court's constructions.

E. Anticipation

42. I understand that a prior art reference "anticipates" an asserted claim, and thus renders the claim invalid, if all elements of the claim are disclosed in that prior art reference, either explicitly or inherently.

43. I understand that an element is inherently disclosed in a reference if it necessarily is present in that which is described in the reference.

44. I understand that, once the claims of a patent have been properly construed, the second step in determining anticipation of a patent claim requires a comparison of the properly construed claim language to the prior art on a limitation-by-limitation basis.

F. Obviousness

45. I understand that even if a patent claim is not anticipated, it is still invalid if the differences between the claimed subject matter and the prior art are such that the subject matter as a whole would have been obvious at the time the invention was made to a person of ordinary skill in the pertinent art.

46. I understand that a person of ordinary skill in the art provides a reference point from which the prior art and claimed invention should be viewed.

This reference point prevents one from using his or her own insight or hindsight in deciding whether a claim is obvious.

47. I also understand that an obviousness determination includes the consideration of various factors such as (1) the scope and content of the prior art, (2) the differences between the prior art and the asserted claims, (3) the level of ordinary skill in the pertinent art, and (4) the existence of secondary considerations of obviousness or non-obviousness.

48. I understand that an obviousness determination can be based on a single prior art reference or a combination of multiple prior art references. I understand that the prior art itself may provide a suggestion, motivation, or reason to combine or modify the teachings of the prior art, or that such a reason may come from other sources, such as the knowledge of a person having ordinary skill in the art, common sense, and market forces. I understand that the following rationales may support a finding of obviousness:

- Combining prior art elements according to known methods to yield predictable results;
- Simple substitution of one known element for another to obtain predictable results;
- Use of known technique to improve similar devices, methods, or products in the same way;
- Applying a known technique to a known device, method, or product ready for improvement to yield predictable results;

- "Obvious to try"—choosing from a finite number of identified, predictable solutions, with a reasonable expectation of success;
- Known work in one field of endeavor may prompt variations of it for use in either the same field or a different one based on design incentives or other market forces if the variations are predictable to one of ordinary skill in the art;
- Some teaching, suggestion, or motivation in the prior art that would have led one of ordinary skill to modify the prior art reference or to combine prior art reference teachings to arrive at the claimed invention.

49. I understand that an obviousness determination requires a reasonable expectation of success in achieving the claimed invention.

50. I understand that secondary considerations of non-obviousness may include (1) a long felt but unmet need in the prior art that was satisfied by the invention of the patent; (2) commercial success or lack of commercial success of processes covered by the patent; (3) unexpected results achieved by the invention; (4) praise of the invention by others skilled in the art; (5) the taking of licenses under the patent by others; (6) deliberate copying of the invention; (7) teaching away; and (8) the simultaneous invention of the claimed subject matter. I also understand that there must be a relationship between any such secondary considerations and the invention. I further understand that contemporaneous and independent invention by others is a secondary consideration supporting an obviousness determination.

51. I understand that any secondary consideration must bear a nexus to the claimed invention. Where the offered secondary consideration actually results from something other than what is both claimed and novel in the claim, there is no nexus to the merits of the claimed invention. I further understand that the patentee bears the burden of demonstrating that the relevant commercial success is attributable to the claimed invention, as opposed to other economic and commercial factors unrelated to the technical quality of the patented subject matter.

G. Person of Ordinary Skill in the Art

52. I have been informed that the person of ordinary skill in the art is a hypothetical person who is presumed to have known all of the relevant art at the time of the invention. I have been informed that the person of ordinary skill in the art may possess the education, skills, and experience of multiple actual people who would work together as a team to solve a problem in the field. I have been informed that factors that may be considered in determining the level of ordinary skill in the art may include: (1) the educational level of the inventor; (2) type of problems encountered in the art; (3) prior art solutions to those problems; (4) rapidity with which innovations are made; (5) sophistication of the technology; and (6) educational level of active workers in the field.

53. On the basis of my consideration of these factors and my experience, including in the field of computed tomography and densitometry, and including my

familiarity with medical radiography systems generally, I have been asked to opine as to the level of skill of the hypothetical person of ordinary skill in the art to which the ’374, ’301, and ’262 patents are directed. In my opinion, the hypothetical person of ordinary skill in the art would include a person with an advanced medical degree, such as an MD, DDS, or DMD if also combined with an undergraduate degree in Computer Science, Engineering, Medical Physics, Physics, or a related field, and/or an advanced degree in Computer Science, Engineering, Medical Physics, Physics, or a related field. In addition, the POSA would have at least three years of experience in using and/or designing medical imaging devices, including CT imaging systems and/or densitometry imaging systems, with education substituting for experience and *vice versa*.

54. I have undertaken to consider the knowledge the POSA would have had as of December 1, 1999 for the ’374 and ’301 patents. When I refer to the POSA in this Declaration in my discussion of the ’374 and ’301 patents, I am referring to a person of ordinary skill in the art as of that date.

55. With respect to the ’262 patent, I have undertaken to consider the knowledge the POSA would have had as of December 1, 1999 and January 24, 2003. There is no difference in my opinions regarding the state of the art as of January 24, 2003 and December 1, 1999 (as discussed below, CT imaging was quite mature at that time), with the exception that I have been informed that the

Massie publication is prior art if the 2003 date applies, but not if the 1999 date applies.

V. BACKGROUND

56. I have been asked to provide a background discussion relating to the technologies at issue. Except where otherwise noted, this background is based on my personal knowledge and experience in the relevant fields as described above.

57. Over the course of the last century, the medical community has developed a series of imaging techniques that facilitate the diagnosis, treatment, and monitoring of patients by providing images of a patient's internal structures. Before 1999, a host of imaging techniques existed and were in common use, including conventional projection X-rays, various forms of X-ray tomography (both axial and transverse), magnetic resonance imaging, ultrasound, and others. *See generally* Bushberg et al., THE ESSENTIAL PHYSICS OF MEDICAL IMAGING (1st ed. 1994) (Ex. 1021).[1] Another authoritative text – a 3-volume "Handbook of Medical Imaging" – was prepared for publication prior to December 1, 1999, with the three volumes published on paper in 2000 (Volume 1 on February 16, 2000, Volume 2 on January 1, 2000, Volume 3 later in 2000. Volume

[1] The Bushberg treatise, now in its third edition, is a standard text in the field of medical imaging. The first edition was published in 1994, and I therefore understand that it is prior art to the '374, '301, and '262 patents. I have been asked to assume that a POSA would have been aware of this publication.

1: Physics and Psychophysics examined x-ray imaging physics and reviews linear systems theory and its application to signal and noise propagation. The first half addresses the physics of important imaging modalities in use at that time: ultrasound, CT, MRI, and the then-emerging flat panel x-ray detectors and their applications (ISBN: 9780819477729). Volume 2: Medical Image Processing and Analysis addressed the methods in use or in development for enhancing the visual perception of digital medical images obtained by a wide variety of imaging modalities and for image analysis as an aid to detection and diagnosis, focusing among others on tomographic image reconstruction methods, image registration, and image segmentation (ISBN: 0819436224). Volume 3: Display and PACS is mainly unrelated to the patents considered here (ISBN: 0819436232). I was deeply involved in preparation of this 3-volume textbook and was the editor (with M. J. Fitzpatrick) of its 1200-page long Volume 2. As such, I can attest that this handbook very accurately reflects the relevant state of the arts prior to Dec. 1, 1999. The ’374, ’301, and ’262 patents focus on tomographic imaging. A common form of imaging that would have been familiar to the POSA as of the priority dates of the patents is computed tomography, or “CT.” I address these technologies in greater detail below.

A. X-ray Imaging

58. X-rays are a form of high-energy, short-wavelength electromagnetic radiation. Materials vary in their ability to absorb X-rays. Accordingly, when X-rays pass through an object, those X-rays are attenuated to varying degrees depending on the shape and composition of the object. Thicker or more dense structures like bone reduce the number of X-rays transmitted, whereas thinner or less dense structures like muscle or fat allow more X-rays to be transmitted. By measuring the attenuation of X-rays as they pass through a patient's body, it is possible to generate an image of the patient's internal structures.

59. Conventional X-ray projection imaging, sometimes called projection radiography, was developed more than a century ago. In conventional X-ray imaging, a stationary X-ray source generates X-rays that pass through the patient, and the resulting attenuation is recorded by a detector. Historically, this detector was simply a film, though modern X-ray devices may instead rely on digital detectors. The resulting projection image, called a radiograph, is a two-dimensional representation of all of the tissues in the path of the X-ray. Accordingly, the third dimension of information (the dimension of depth, along the axis parallel to the X-ray beam) is collapsed, such that the layers of structures in the path of the X-rays are superimposed on each other. *See* Ex. 1021 (Bushberg) at 139–40. The image below depicts this process:

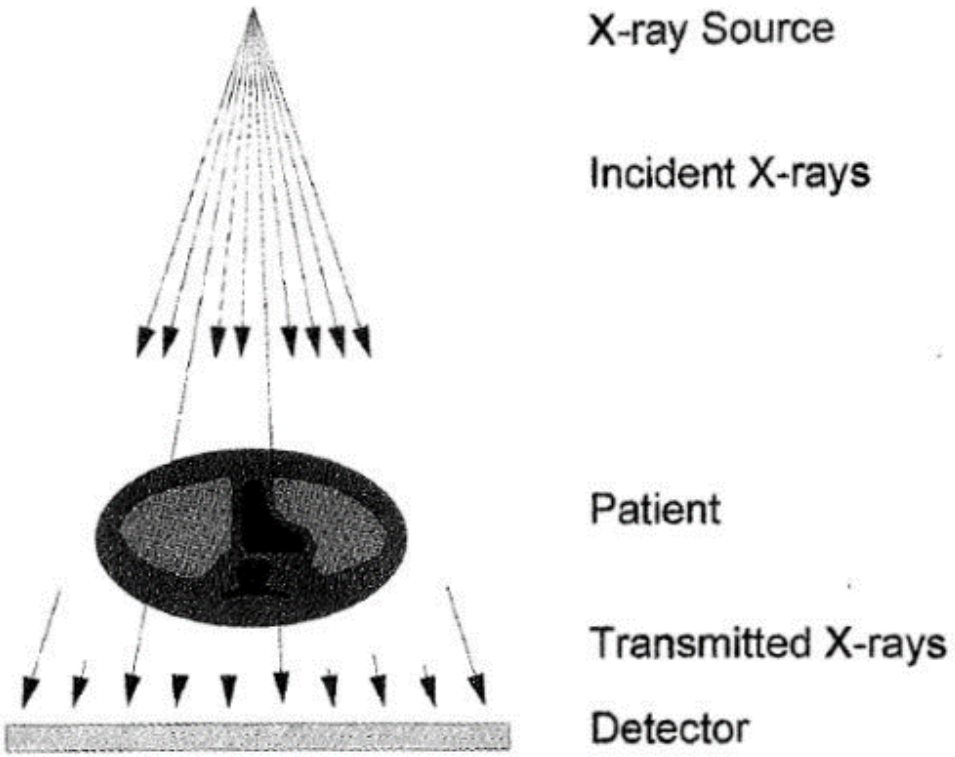

Figure 6.1. Radiography is a transmission projection imaging technique. The attenuation information along the straight-line paths of the x-ray photons is summed up (integrated), allowing the three-dimensional anatomy of the patient to be compressed onto a two-dimensional image. The thickness and composition of tissue that the x-ray photons transit influence the optical density of the film at each point on the film.

Id. at Fig. 6.1.

60. Conventional X-rays have several limitations, as Godfrey Hounsfield noted in his Nobel Lecture in 1979.[2] First, as noted above, objects in depth are superimposed, which may limit one's ability to obtain detailed information about a structure of interest. Second, conventional X-rays are generally poor at

[2] Godfrey N. Hounsfield, "Computed Medical Imaging," Nobel Lecture (Dec. 8, 1979), *available at* https://www.nobelprize.org/uploads/2018/06/hounsfield-lecture.pdf (Ex. 1028). Because Hounsfield's lecture was presented to the public in 1979, I understand that it is prior art to the '374, '301, and '262 patents.

distinguishing between various soft tissues. Third, conventional X-ray methods do not allow the quantitative measurement of the separate densities of the various materials through which the X-rays have passed. *See* Ex. 1028 (Hounsfield Nobel Lecture).

61. Over the course of the 20th century, another form of X-ray imaging, called "tomographic" imaging, was developed. Before the priority dates of the '301, '374, and '262 patents, tomographic imaging was commonplace. *See generally* Ex. 1021 (Bushberg), Chs. 8, 10.

B. Tomography

62. Tomography, unlike projection imaging, addresses the problem of superimposition by generating *cross-sectional* images.

63. Tomography was first conceived by the mathematician Johann Radon in 1917 and was first reduced to practice in radiology in about 1930. Although the field has developed significantly in the ensuing century, the original principles of tomography have not changed substantially in spite of many technological advances. The relevant state of the art of computed tomography in medical imaging was captured in one of the chapters prepared prior to December 1, 1999 and published on January 1, 2000 in the SPIE Handbook of Medical Imaging[3] -

[3] Sonka, M., & Fitzpatrick, J. M. (Eds.). (2000). *Handbook of medical imaging, volume 2: Medical image processing and analysis.* SPIE Press (Ex. 1038).

Volume 2: Medical Image Processing and Analysis is devoted to tomographic image reconstruction methods (authored by Fessler, 70 pages) as well as a physics-oriented chapter titled "Tomographic imaging" that was published in the Handbook's Volume 1.

64. Tomography has generally been practiced in one of two ways—transverse tomography and axial tomography.

C. Transverse tomography

65. Transverse tomography—sometimes called classical tomography, conventional tomography, linear tomography, or tomosynthesis—generally refers to a form of tomography in which the X-ray source and detector are moved in opposition to one another over a limited range of motion. In film imaging systems, the X-ray source and detector pivot about a point or a locus of points, such that the objects in the plane of the pivot point(s) are in focus, and the remaining objects in the body are blurred to various degrees. *See* Ex. 1021 (Bushberg) at 196–99 (describing principles of conventional tomography). Bushberg illustrates the principle:

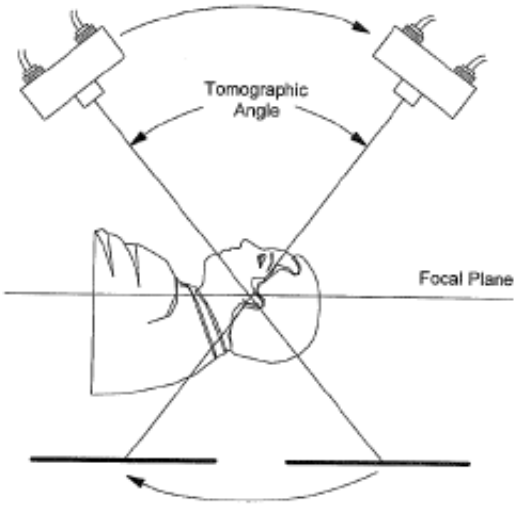

Ex. 1021, Fig. 8.2.

66. In 1972, Grant demonstrated that it is possible to create a digital transverse tomogram using a principle he called "tomosynthesis," or synthetic tomography.[4] In this method, unlike a CT scan, the preferred orientation of the tomographic planes is transverse to the body (*e.g.*, coronal), rather than axial. Tomosynthesis has the advantage that an infinite number of reconstructions are possible from the acquired projections, each describing a plane with a different position and orientation. Today, many different imaging systems use the principle of tomosynthesis, including digital panoramic dental X-rays, digital breast tomosynthesis, and body tomosynthesis.

D. Computed tomography (CT)

[4] Grant, "TOMOSYNTHESIS: A Radiographic Imaging Technique," *IEEE Transactions on Biomedical Engineering* (Vol. BME-19, Issue 1, Jan. 1972) (Ex. 1029).

67. Computed tomography was invented by Geoffrey Hounsfield and others in the late 1960s, a contribution for which he was awarded the Nobel Prize in 1979.[5]

68. Unlike conventional X-ray imaging, CT allows for a cross-sectional image (or "slice"). A slice image is generated by taking measurements of X-ray attenuation through a subject at many different angles, as shown in the diagram below:

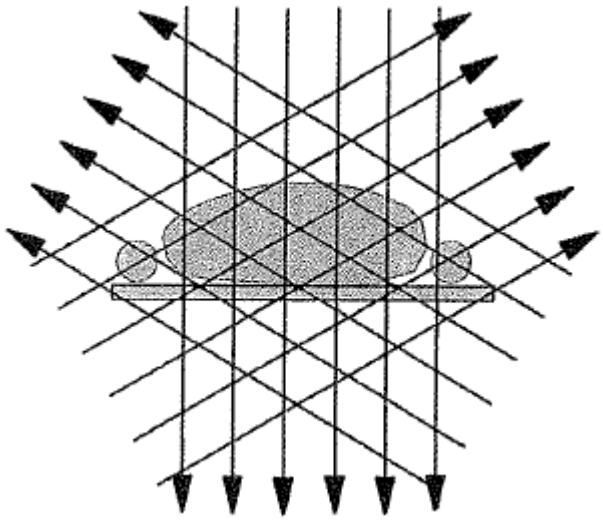

Ex. 1021 (Bushberg) at Fig. 10.2. Acquisition in this manner generates a large number of "rays" or "ray sums" through the object. Each ray represents a single path from an X-ray source to a detector element. These rays are acquired over a large set of locations and orientations (called "views") in order to form a set that is

[5] Hounsfield shared the prize with Allan Cormack, who contributed some of the insights necessary for the mathematical reconstruction of tomographic images.

sufficiently complete to allow reconstruction of the image. *See* Ex. 1021 (Bushberg) at 241–43.

69. The attenuation data is detected and digitized. The data collected from the various scan angles are then compiled and processed algorithmically to generate attenuation values for small three-dimensional volumes of tissue, called "voxels." The values for each voxel within a given plane, when "reconstructed," comprise a tomographic slice, as shown in the image below:

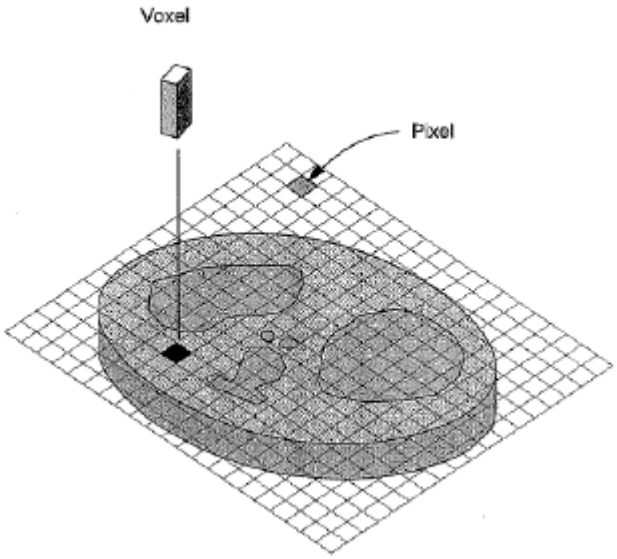

Ex. 1021 (Bushberg), Fig. 10.3.

70. When a CT image is reconstructed, the voxel elements are assigned a value related to the linear attenuation coefficient of the materials in that voxel. To render the values more consistent between different CT devices and different acquisition conditions, the values are normalized to integer "CT numbers," which are expressed in Hounsfield Units (HU). The Hounsfield unit scale is defined such

that air (at standard temperature and pressure) is defined as -1000 HU, and water (distilled, at standard temperature and pressure) is defined as 0 HU. *Id.* at 245–47.

71. As known by 1999, CT systems share a number of features in common, which I address below:

72. All CT systems require an energy source (X-rays are the most common), to illuminate the patient, paired with a detector that measures the attenuation of X-rays transmitted through the patient. For CT imaging, the X-ray source and detector generally are stationary with respect to each other but move relative to the patient in order to obtain multiple views.

73. X-rays emanate from a point within the X-ray tube. These X-rays emanate in many different directions. Because ionizing radiation may pose risks to patients and personnel, it was well understood by the priority date that all X-ray imaging devices (including CT scanners) were required to have a method of restricting the X-ray beam such that the beam only strikes the patient over a region defined by the clinical task. Such restricted beams were referred to as "restricted beams" or "collimated beams." *See, e.g.*, Ex. 1021 (Bushberg) at 262.

74. X-ray beams were commonly collimated using a pair of lead "jaws" (sometimes called "blades"). The dense lead blocks X-rays from passing through it, and the aperture of the jaws dictates the geometry of the X-ray beam.

75. The detector is composed of individual detector elements. These individual detector elements may be arranged in a number of ways depending on the geometry of the X-ray beam (as discussed below) and the needs of the system.

76. Beam geometries well known at or before December 1, 1999, include "fan beam" and "cone beam" geometries.

77. Conventional CT equipment using a fan-shaped X-ray beam captures information from a series of axial plane slices, or from a continuous spiral motion along the axial plane. In simple terms, a fan beam allows a single (or narrow) row of detector elements to be exposed simultaneously, so that multiple rays from a single view can be acquired. *Id.* at 245. Bushberg depicts an exemplar fan beam:

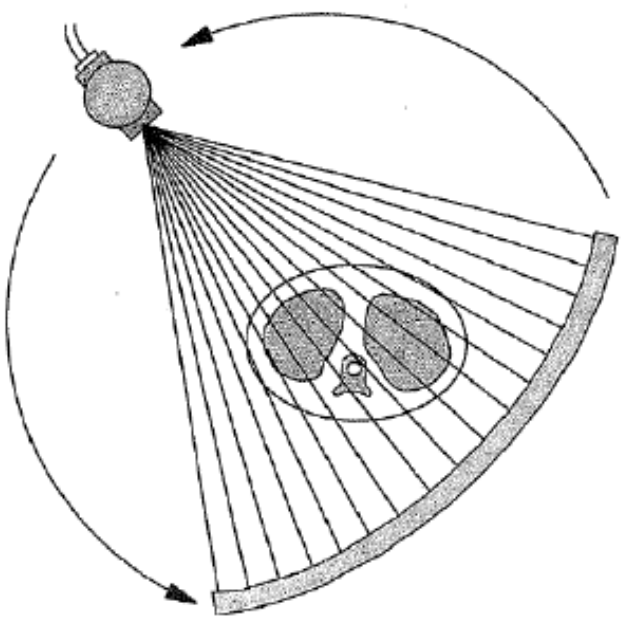

Ex. 1021 at Fig. 10.1.

78. In CT utilizing a fan beam configuration, the patient is moved relative to the X-ray source and detector. One common configuration places the patient on a gantry that translates along an axis about which the X-ray equipment rotates. A variation holds the patient in a constant position while the X-ray equipment rotates and translates relative to the patient. Because the equipment moves axially relative to the patient in this type of scan, this allows for the acquisition of data from multiple planes, which in turn means the data set can be used to produce three-dimensional images.

79. It was known before the priority date that CT could alternatively employ a cone beam geometry. *E.g.*, Ex. 1021 (Bushberg) at 272. While the basic principles of CT remain unchanged as between fan beam and cone beam CT, there are a few notable differences. One fundamental difference, as the name implies, is the shape of the beam. This of course also impacts the shape of the detector. Cone beam CT utilizes a cone-shaped beam and an area detector (commonly a square or rectangular grid of detector elements) that is larger than the narrow detector employed with a fan beam. Ex. 1021 (Bushberg) at 272–73. As compared to the slice-by-slice imaging of fan beam CT, cone beam CT has the capability to capture a full volume of an image in a single rotation (not just a plane), so that movement of the target axially relative to the X-ray equipment is not required in order to develop a dataset containing 3D information. *Id.* While this leads to differences in

the manner by which the CT images are reconstructed (*e.g.*, the cone beam algorithm must take into consideration beam divergence in multiple dimensions, whereas the fan beam algorithm considers the beam divergence in just one dimension, *id.* at 273), the general principles are the same as with fan beam imaging, and were known well before 1999.

80. Because data sufficient to reconstruct a 3D image can be acquired in one rotation, cone beam CT devices generally deliver a lower radiation dose to the patient, and the machines can be simpler (smaller and less expensive) as compared to conventional axial CT. This led to their increased use in dental applications, among others. *See, e.g.*, Ex. 1033 (Venkatesh)[6]; Ex 1035 (Mozzo)[7] at 1558 (describing "a new type of CT machine devoted to the imaging of dental and maxillo-facial structures and based on the cone-beam technique (CBCT).")

81. By 1999, a POSA would have been familiar with cone beam CT systems and fan beam axial CT systems.

82. In order to obtain the necessary data, a CT system must be able to maintain the patient in position and to change the orientation of the X-ray source

---

[6] Venkatesh, "Cone beam computed tomography: basics and applications in dentistry," *J. Istanb. Univ. Fac. Dent.* 51(3 Suppl 1): S102-21 (2017). I understand that the Venkatesh paper is not prior art and cite it only by way of background.

[7] Mozzo et al., "A new volumetric CT machine for dental imaging based on the cone-beam technique: preliminary results," *Eur. Radiol.*, 8: 1558-64 (Nov. 1998).

and detector with respect to the patient during the course of a scan, and to understand precisely where the target tissue is relative to the system. This requires components such as computer-controlled motors, gantries, and so on. Such systems were well known by 1999, as shown in the art described in greater detail below.

83. CT systems are designed to acquire image data in such a way that the intrinsic acquired data are not readily interpretable by a human observer (in contrast with a film exposure generated in x-ray projecting imaging, for example). Instead, the data are acquired to be suitable for subsequent computer processing, called image reconstruction.

84. In order to acquire data in a form that can be processed by a computer, all digital radiographic and tomographic imaging systems have an analog-to-digital converter. An analog-to-digital converter is an electrical device that accepts an analog signal as an input and creates a digital output signal that is proportional to the input. The purpose of the analog-to-digital converter is to convert the measured X-ray attenuation for a voxel into a digital signal for display, image processing, and image reconstruction. Ex. 1021 at 45–46.

85. CT systems were known to include computer hardware and software necessary to control the system and to process the acquired data to reconstruct tomographic models of the imaged structure.

E. Single vs. Dual Energy Imaging

86. X-ray imaging, including tomographic X-ray imaging, uses a spectrum of X-rays of different energies, just as light is composed on a spectrum of different color. X-ray tubes be configured to control the spectrum of X-rays emitted.

87. Imaging systems may be operated so that only a single spectrum of radiation is recorded. This is called "single-energy" imaging.

88. The attenuation of X-rays through a material depends in part on the material's properties, elemental composition, and density. Materials have different attenuation profiles at different energy levels according to their composition. Accordingly, performing a scan at two different energy levels provides more information about the tissue than a single-energy scan.

89. While a single-energy acquisition provides information about bone density, it was known as of 1999 that bone density could be more precisely determined with dual-energy acquisition. *See, e.g.*, Ex. 1014 at 493 ("An alternative method for a beam-hardening correction is the use of dual-energy CT scans"); Ex. 1026 (Bisek)[8] at 1:37–51 ("The ability to quantify the measurement of

[8] RE 36,162 (Bisek), titled "Whole-Body Dual-Energy Bone Densitometry Using a Narrow Angle Fan Beam to Cover the Entire Body in Successive Scans," was filed on August 26, 1996 and reissued on March 23, 1999. I understand Bisek is prior art to the '301, '374, and '262 patents.

the transmitted radiation, implicit in the digitization by the analog to digital converter, allows not only the formation of a radiographic ‘attenuation’ image but also the mathematical analysis of the composition of the attenuating material by dual energy techniques . . . . Such dual energy techniques quantitatively compare the attenuation of radiation at two energies to distinguish, for example, between bone and soft tissue. Dual energy techniques allow the measurement of bone mass, such measurement being important in the treatment of osteoporosis and other bone diseases.”).

F. Three-Dimensional Modeling

90. As noted above, CT devices acquire information representing X-ray attenuation in a three-dimensional space of tissue called a voxel. Once data about a sufficient number of voxels in the target tissue volume is acquired, computer software can assemble the data into a three-dimensional model of the imaged structure that can be displayed. *See generally* Ex. 1021 (Bushberg) at 273–86 (“Reconstruction Techniques”). Such techniques were known by 1999. Rothman’s treatise DENTAL APPLICATIONS OF COMPUTERIZED TOMOGRAPHY, which I discuss in greater detail below, Section X.D, provides an example of a three-dimensional rendering of a dental structure using such software:

Figs 3-3a and 3-3b Three-dimensional reformations demonstrating the position of the inferior alveolar nerve *(red)* along the superior surface of the mandible.

Ex. 1016 (Rothman) at 43; *see also id.* at 29 (describing software "capable of displaying an entire volume of data from a large number of angles. It therefore allows the operator to define the picture elements that make up the osseous structures. The jaw can be turned in space and viewed from any angle."). As mentioned above – one of the chapters prepared prior to December 1, 1999 and published on January 1, 2000 in the SPIE Handbook of Medical Imaging -Volume 2: Medical Image Processing and Analysis is devoted to extracting models of the anatomy from medical images (authored by Gueziec, 67 pages).

G. Fiducial Markers

91. As I note below, Section VI.B.1, a fiducial marker is an x-ray attenuating or reflective object placed on or within the structure to be imaged to serve as a reference point. Fiducial markers facilitate the alignment of multiple

slices and the comparison of images in time by providing a constant frame of reference. While fiducial markers can be an aid to precision, however, a POSA would have understood that such alignments and comparisons could be made as of 1999 without the use of fiducial markers. In fact, the majority of radiography and tomography was performed without fiducial markers and techniques for volumetric image registration (matching or comparison) existed in 1999. As mentioned above – one of the chapters prepared prior to December 1, 1999 and published on January 1, 2000 in the SPIE Handbook of Medical Imaging -Volume 2: Medical Image Processing and Analysis is devoted to image registration (authored by Fitzpatrick, Hill, and Maurer, 65 pages).

H. Densitometry

92. Bone densitometry is the measurement of the density of bone. Techniques for measuring bone density have long existed. *E.g.*, Ex. 1014 (Cann) at 493; Ex. 1022 (Genant 1993) at 91–97; Ex. 1023 (Genant 1998) at 915. While it was known how to determine bone density by techniques other than CT (e.g., radiography, tomography, ultrasound), before 1999, it was also known that CT was preferable for this purpose due to its volumetric reconstruction character.

93. As Bushberg acknowledges, it was known that "*[b]one mineral densitometry* is a quantitative CT technique that is useful for evaluating the density of bone mineral in a patient." Ex. 1021 (Bushberg) at 273 (emphasis in original).

As an initial matter, I note that CT inherently provides quantitative information relating to density. The CT number of a given voxel represents quantitative density because density is one of the primary factors that dictates attenuation at the relevant X-ray energy levels. "The CT number for a certain pixel actually corresponds to *physical properties* within the patient in the corresponding voxel." *Id*. at 246 (emphasis in original). Accordingly, "CT has the potential of being a *quantitative* as well as a qualitative imaging technique." *Id.* (emphasis in original).

94. Although Hounsfield units reflect the density of an object, it was also known that an external bone mineral reference standard (often termed a "phantom") could be included in the scan to obtain a more precise measurement of bone density (expressed in mg/cm^3, for example).

I. The Role of Comparison in Medical Imaging

95. One of the fundamental principles in medical imaging is the comparison of a patient's scans over time. Such serial comparisons have long been routinely used for diagnostic purposes. For instance, they allow a physician to determine if an abnormality is changing in shape or size, or at what rate bone mass is changing.

96. It is also known in medical imaging to compare a patient's image to a standard image (or atlas). For instance, in treatment and monitoring of

osteoporosis, medical professionals will compare the scan of a patient's spine to the bone-density and/or architectural structure standard (normative atlas) for that patient's age and gender.

97. While such serial patient-to-patient and patient-to-standard comparisons can be performed manually, it was well known as of the priority date to use computer algorithms to perform such comparisons. A POSA would have been familiar with software solutions to perform such comparisons. I discuss some of these software solutions further below.

VI. OPINIONS REGARDING CLAIM CONSTRUCTION

A. District Court Constructions

98. I have been informed that the United States District Court for the District of Delaware construed certain claim terms in *Osseo Imaging, LLC v. Planmeca USA Inc.*, 1-17-cv-01386 (D. Del. 2017). Ex. 1009 (Markman Corrected Order), Ex. 1010 (Markman Memorandum). I have applied these constructions to my analysis of the '374, '301, and '262 patents.

1. "Tomographically modeling/tomographic model(s)/tomographical model(s) ('374 patent: claims 1, 3, 5, 6, 9, 11, 12, 13, 15, 19, and 21; '301 patent: claims 1, 10, and 20)

99. I have been informed that the Delaware Court construed these terms to mean: "merging information from multiple tomographic scans of an object to produce a representation of the subject/said representation depicting quantitative

density differences of the object scanned, which is created by the microprocessor in the controller using densitometry from at least one focal plane." Ex. 1010 (Markman Memorandum) at 5–7.

2. "Tomographic dental/orthopedic densitometry model/tomographical densitometry model" ('301 patent: claims 1, 7, 10, 14–17, and 20)

100. I have been informed that the Delaware Court construed these terms to mean: "merging information from multiple tomographic scans of an object to produce a representation of the subject/said representation depicting quantitative density differences of the object scanned, which is created by the microprocessor in the controller using densitometry from at least one focal plane." *Id*. at 7–8.

3. "Densitometry" ('301 patent: claims 1, 7, 8, 10, 14–20; '262 patent: claim 1)

101. I have been informed that the Delaware Court construed this term to mean: "quantitatively calculated bone density." *Id*. at 8–9.

4. "3D (digital) tomographic model(s)" ('374 patent: claims 3, 13, and 21)

102. I understand that the Delaware District Court construed this term consistent with its plain meaning. Ex. 1010 (Markman Memorandum) at 9–10. That is, I understand it requires a digital model that includes information for three dimensions, such as would be true for a model constructed from two or more focal planes. *See* Ex. 1011 (Markman Transcript) at 60:1–62:15.

5. "Three dimensional digital densitometry model" ('262 patent: claim 1)

103. I understand that the Delaware District Court construed this term consistent with its plain meaning. Ex. 1010 (Markman Memorandum) at 9–10. That is, I understand it requires a digital model that includes information for three dimensions, such as would be true for a model constructed from two or more focal planes. *See* Ex. 1011 (Markman Transcript) at 60:1–62:15.

6. "Conversion means" ('301 patent: claims 1, 3, and 4)

104. I have been informed that the Delaware Court found this term to be a means-plus-function limitation. Ex. 1010 (Markman Memorandum) at 10. That is, the Delaware Court held that the function is "converting a signal from the detector array" and the structure is "an analog-to-digital convertor." *Id*.

7. "A controller" ('374 patent: claims 1, 5, 6, 11, 12, 13, 15, 19, and 21; '301 patent: claims 1, 10, 12, and 20)

105. I have been informed that the Delaware Court construed this term to mean: "One or more controllers." The Delaware Court deemed that no construction was necessary for the term controller. *Id*. at 11–12. A controller, as used by the patent and further described below in my declaration, is a generic term for a device having computing capability. *E.g.*, Ex. 1001 at 4:3–10; 6:10–13.

8. "Merger device" ('301 patent: claim 4)

106. I understand that the Delaware Court construed this term to mean: "a device that merges digitized signals into a data output suitable for processing and analyzing by a microprocessor." Ex. 1010 (Markman Memorandum) at 12.

9. "Means for storing a preexisting tomographical dental/orthopedic densitometry model" ('301 patent: claim 1)

107. I have been informed that the Delaware Court found these terms to be a means-plus-function limitation. *Id*. at 12–13. That is, the Delaware Court held that the function is "storing a pre-existing tomographical dental/orthopedic densitometry model" and that the corresponding structure is a "computer memory." *Id*.

10. "An output device connected to said microprocessor and adapted for receiving a tomographic model/tomographical densitometry model from said microprocessor" ('301 patent: claim 1)

108. I understand that the Delaware Court construed these terms to mean: "One or more output devices connected to said microprocessor and adapted for receiving a tomographic model/tomographical densitometry model from said microprocessor." *Id*. at 13.

11. "Comparing" terms ('374 patent: claims 5, 6, 11, 12, 13, 15, 19, and 21; '301 patent: claims 18 and 20; '262 patent: claim 1)

109. I understand that the Delaware Court deemed that no construction was necessary for these terms. *Id*. at 14–16.

12. "Preexisting patient model/current patient model" ('374 patent: claims 6, 12, 15, and 19)

110. I understand that the Delaware Court construed these terms to mean: "a pair of tomographic models obtained during different imaging sessions, the earlier or preexisting model for use as a baseline for comparing with a later or then current patient model." Ex. 1009 (Markman Corrected Order) at 3.

13. "Movable in response to from said microprocessor" ('301 patent: claim 1)

111. I understand the Delaware Court construed this term to mean: "movable in response to ***signals*** from said microprocessor." *Id*.

B. Constructions of Additional Terms

1. "Fiducial markers" ('374 patent: claims 13 and 21; '262 patent claim 1)

112. The specifications of the '374 and '262 patents do not use or define the term "fiducial marker." The term appears only in certain claims of the '374 and '262 patents. A POSA would have understood this term in the context of the patent to mean: "An x-ray attenuating object on or within the structure to be imaged that serves as a reference point." *See e.g.,* U.S. Patent No. 6,073,044

("Fitzpatrick")[9] (Ex. 1030) at 1:43–2:1 ("The goal of registering two arbitrarily oriented three-dimensional images is to align the coordinate systems of the two images such that any given point in the scanned anatomy is assigned identical addresses in both images. The calculation of the rigid body transformation necessary to register the two coordinate systems requires knowledge of the coordinate vectors of at least three points in the two systems. Such points are called 'fiducial points' or 'fiducials,' and the fiducials used are the geometric centers of markers, which are called 'fiducial markers'. These fiducials are used to correlate image space to physical space and to correlate one image space to another image space. The fiducial markers provide a constant frame of reference visible in a given imaging mode to make registration possible. . . . Broadly speaking, image markers can be either temporary or permanent with respect to the duration of their placement within the human body."); Ex. 1027 ("Arai 439")[10] at 4:59–64 ("The position marker 4 is made of a material, such as a metal, which can be detected as an X-ray image. Since it is desired that the image of the position marker 4 is

[9] U.S. Patent No. 6,073,044 ("Fitzpatrick"), titled "Method for Determining the Location in Physical Space of a Point of Fiducial Marker that is Selectively Detachable to a Base," was filed on April 22, 1999 and issued June 6, 2000. I understand that it is prior art to the '301, '374, and '262 patents.

[10] U.S. Patent No. 6,243,439 ("Arai"), titled "CT Scanning Apparatus," was filed on March 10, 1999 and issued June 5, 2001. I understand that it is prior art to the '301, '374, and '262 patents.

unchanged in any directions and laterally symmetrical, a shape symmetrical with respect to the center line thereof, such as a body of revolution, is suitable.”).

2. “Said controller being adapted for storing computed tomographic models of a dental structure”/“said controller is adapted for storing a first tomographic model and a second tomographic model” (’374 patent: claims 1, 5, 6, 11, and 12)

113. A POSA would understand these terms in accordance with its plain meaning, *i.e.*, the controller has the capability to store tomographic models. The specification of the ’374 patent supports this definition. The controller as described in the ’374 patent comprises of a microprocessor connected to a digital memory device. Ex. 1001 at 4:2–3. The ’374 patent teaches that the “tomographical densitometry model 24 is also entered into the computer’s memory device.” *Id.* at 4:58–60.

3. “Controller is further adapted to compare”/“controller is adapted to compare”/“computer . . . comparing three dimensional digital densitometry models” (’374 patent: claims 5, 6, 11, 12, and 19; ’262 patent: claim 1)

114. The ’374 patent does not describe how the controller is adapted to compare densitometry models. However, the ’374 patent acknowledges that, in the BMD (bone mineral density[11]) context, comparisons between a standard model and a patient’s current model were known, as were comparisons between a patient’s

[11] The ’374 patent refers to BMD as “bone morphology density.” Ex. 1001 at 2:15–17. Based on the context of the ’374 patent, I understand this to mean “bone mineral density.”

current and historical model. Ex. 1001 at 2:22–28. And the ’262 patent teaches that the computer includes comparison software “adapted for digitally comparing baseline and patient-specific dental and orthopedic densitometry models.” Ex. 1003 at 6:6–9; *see also id.* at 7:59–3 (“The software can perform a comparison between the two patient-specific models A.1 and A.X. Densitometry changes can be noted and brought to the attention of the dentist or physician.”). This suggests a construction of “comparison” in accord with its ordinary meaning, that is: “Said controller/computer is programmed with an algorithm that has the capability to identify differences between data sets.”

4. “An energy source and an energy sensor” (’262 patent claim 1)

115. The ’262 patent describes two different energy sources:

(1) “X-ray source 14,” Ex. 1003 at 2:48–3:5, 4:49–60:2, 5:21–25 (Figures 1 and 2), and

(2) “electron beam source 120,” *id.* at 6:10–28, 6:56–7:3, (Figures 3, 4a-d, and 6a).

While electron beam is a stream of electrons (negatively charged particles with shallower penetration in tissue), the X-rays are beams of high-energy photons (form of deep penetrating radiation). The ’262 patent further teaches that these energy sources are coupled with an energy sensor. *Id*. at 4:55–57 (“The X-ray equipment 12 includes an X-ray beam source 14 and a detector array 16.”); 6:11–13 (“The input device 106 includes an electron beam source 120 and a

sensor/receptor 122, which are adapted for positioning with at least a portion of the patient 124 therebetween.”). Therefore, a POSA would understand “an energy source and an energy sensor” to include an X-ray source and sensor, and an electron beam source and sensor.

VII. THE ’374 PATENT

A. Background of the Invention and Related Art Described in the ’374 Patent

116. The ’374 patent, titled “Dental and Orthopedic Densitometry Modeling System and Method,” states that it was filed on September 14, 2012. Ex. 1001 at [54], [22]. The ’374 patent lists seven related U.S. patent applications on its face. *Id*. at [63]. I have been informed by counsel that the ’374 patent claims priority to Application No. 09/452,348 filed on December 1, 1999.

117. According to the ’374 patent, conventional diagnostic procedures in the field of dental diagnosis such as “dental X-rays (both fixed beam and scanning beam), explorers, and other conventional equipment” often fail to diagnose three of the most common dental pathologies: caries associated with decay, fractures, and apical abscesses. *Id.* at 1:29–2:7. For example, the ’374 patent explains that incipient caries (early cavities), particularly those located within the enamel known as “smooth surface” caries, are particularly difficult to diagnose using conventional diagnostic equipment and procedures. *Id.* at 41–51. So, by the time that these caries are finally diagnosed, considerable damage to the tooth may have occurred.

Id. Additionally, the ’374 patent explains that dental fractures, particularly those that are “parallel to the X-ray beam,” are often undetectable on an X-ray negative. *Id.* at 1:53–65. If left undetected and untreated, these fractures can eventually lead to bacterial invasion of the dentin and pulp layers of teeth. *Id.* And finally, the ’374 patent explains that apical abscesses are difficult to diagnose in their early stages when treatment can alleviate the pain and complications associated with advanced apical abscesses. *Id.* at 1:66–2:7.

118. The ’374 patent purports to overcome the diagnostic disadvantages of conventional approaches in dental diagnostics by applying the technology of densitometry to dental and medical applications. *Id.* at 2:43–48. According to the ’374 patent, the use of densitometry can improve the detection and diagnosis of these common dental pathologies. In addition to improved pathology detection and diagnosis, the ’374 patent describes the ability to monitor osseointegration of prostheses, such as dental implants, with the patients’ dental structure as another application of the invention. *Id.* at 2:33–42.

119. The ’374 patent admits that tomography or sectional radiography techniques using scanning X-ray beams were known as of the time of the invention. *Id.* at 2:8–14. The ’374 patent also notes that densitometry procedures for measuring bone morphology density by utilizing scanning X-ray beam techniques were known as of the time of the invention. *Id.* at 2:15–21. In fact, the

’374 patent specifically applies known densitometry modeling and mapping techniques for dental applications:

> The availability of relatively fast computers with large memories at reasonable costs has led to the digitalization of X-ray images for mapping BMD [bone morphology density] models in various formats. For example, BMD images use color to identify varying densities. Digital BMD patient models are also used for comparison purposes with standard models and with patients’ own prior BMD histories. Age correction factors can be applied to patients’ models for diagnosing and monitoring the onset and progress of such medical conditions such as osteoporosis and the like. The present invention utilizes such densitometry modeling and mapping techniques for dental applications.

Id. at 2:22–32.

120. The ’374 patent describes both a dental densitometry modeling system and a dental and orthopedic densitometry modeling method. According to the ’374 patent, the dental densitometry modeling system, as illustrated in Figure 1, includes a controller 2 with a microprocessor 6 connected to a digital memory device 7. *Id.* at 4:2–3. The ’374 patent teaches that the actual hardware for these components is any of a number of commercially available suitable devices and that the software for the controller is any of a variety of “commercially available

programming languages and software development systems." *Id.* at 4:3–14. The '374 patent further describes that microprocessor 6 is adapted to receive input from one or more input devices, such as a keyboard, mouse, communications link, or another computer. *Id.* at 4:14–16. According to the '374 patent, this input includes, but is not limited to, a patient's dental and orthopedic records, baseline tomographical densitometry models, and a preprogrammed scan path for the X-ray equipment. *Id*. at 4:17–23. The '374 patent further describes microprocessor 6 as controlling positioning motor 10, which is connected to and moves X-ray equipment 12 through three axes of movement. *Id.* at 4:24–26. As with the controller and input device, the '374 patent points to existing, known X-ray equipment as part of the densitometry modeling system. *Id*. at 4:26–37. These known X-ray equipment comprise of an X-ray beam source 14, with the X-ray beam collimated to any known configuration such as fan, pencil, cone, etc., and detector array 16. *Id.* According to the '374 patent, signals from detector array 16 are subsequently sent to analog-to-digital (A/D) converter 20, from which digitized signals are transmitted to a merger device 22 and eventually to microprocessor 6 which uses data generated by the merger device to create a tomographic densitometry model. *Id.* at 4:38–44. The '374 patent then explains that this tomographic model can be transmitted to a variety of known output devices such as a monitor, display, or printer. *Id*. at 4:45–50.

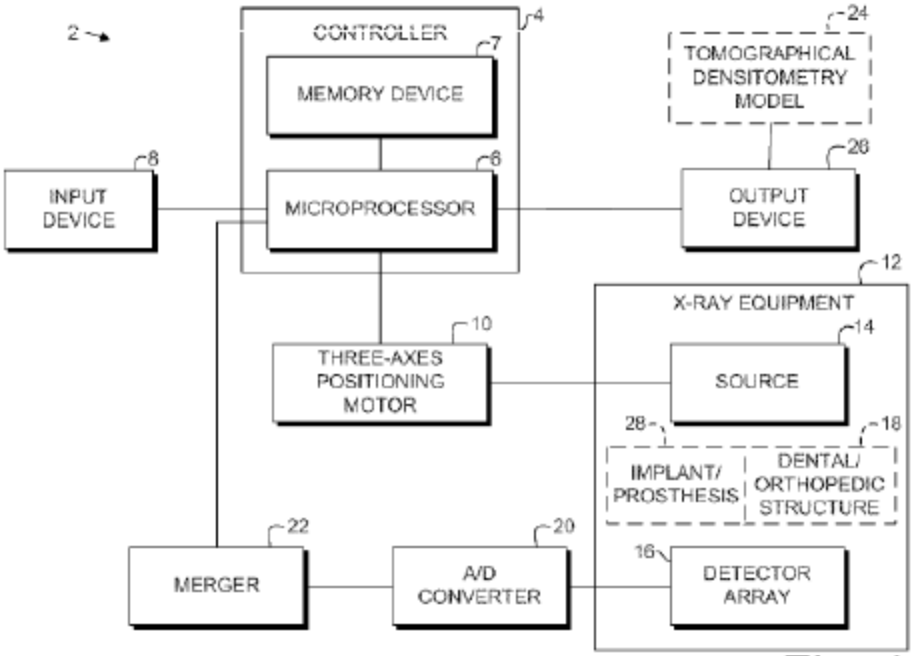

Fig. 1

121. The dental and orthopedic densitometry modeling method described in the ’374 patent, illustrated in Figure 2, involves the steps of:

- Positioning a patient relative to the X-ray equipment with the patient’s dental or orthopedic structure to be examined between the X-ray source and the detector array;
- Inputting diagnostic parameters into the system;
- Commencing the scanning protocol with a collimated first energy level band beam;
- Digitizing and storing the signal from the first energy level band beam scan;
- Repeating the steps of scanning, digitizing, and storing with a second energy level band beam scan;
- Repeating the first and second energy band beam steps until the X-ray equipment traverses the entire preprogrammed scan path;

- Digitizing the detector array output and comparing the tomographically modeled output to the diagnostic parameters stored in the system; and
- Sending the tomographically modeled out to a visual display.

Id. at 4:65–4:31.

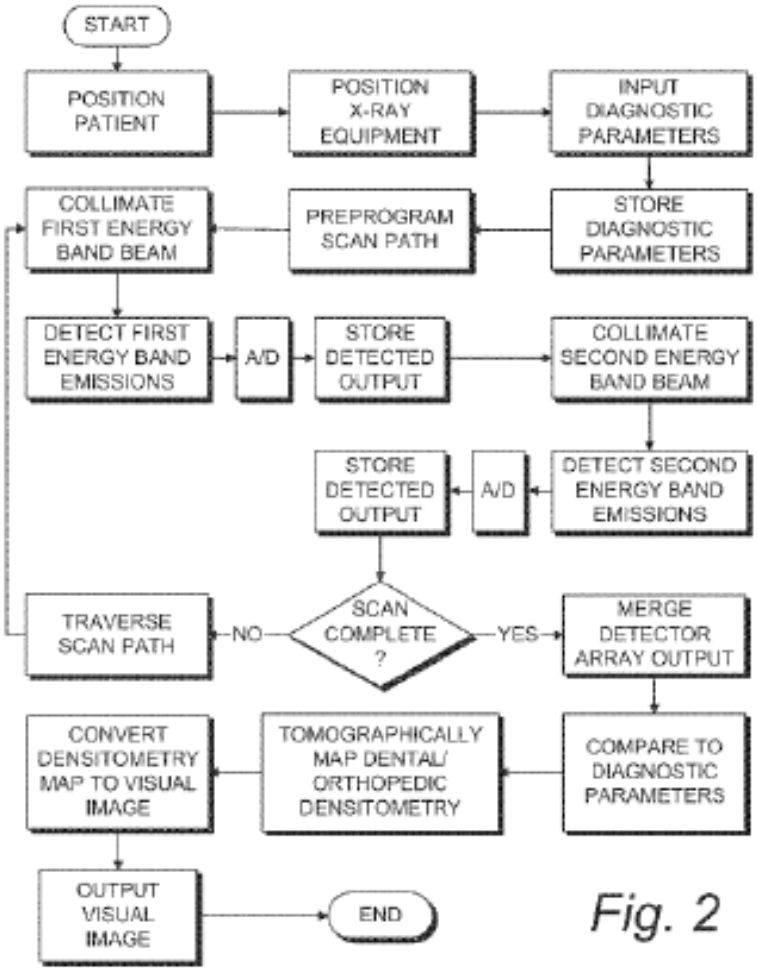

Fig. 2

122. I have reviewed the file history of the ’374 patent. The examiner allowed all claims of the ’374 patent after the applicant filed a terminal disclaimer to overcome a rejection on the ground of non-statutory obviousness-type double

patenting over the claims in Application No. 13/367,150. Ex. 1004 at 39–40, 52-53.

B. The Claims of the ’374 Patent

123. It is my understanding that Dentsply is challenging claims 1–24 of the ’374 patent.

1. Claim 1

124. Independent claim 1 of the ’374 patent reads: A system for tomographically modeling a dental structure, the system comprising:

> a controller with a microprocessor and a memory device connected to the microprocessor, said controller being adapted for storing computed tomographic models of a dental structure;
>
> an input device connected to the microprocessor;
>
> a positioning motor connected to the microprocessor and responsive to commands from said microprocessor;
>
> X-ray equipment including an X-ray source, a detector array, and a restricted beam device;
>
> a convertor for converting a signal from said detector array, said convertor being connected to said detector array and to said microprocessor; and

> an output device connected to said microprocessor and adapted for receiving a tomographic model from said microprocessor.

Ex. 1001 at 5:34–50. This claim incorporates the controller, input device, positioning motor, X-ray equipment, convertor, and output device admitted as prior art in the ’374 patent.

2. Claims 13 and 21

125. Independent claims 13 and 21 have very similar limitations to claim 1, including a controller, input device, positioning motor, X-ray equipment, convertor, and output device. The primary difference between claim 13 and claim 1 is that the preamble of claim 13 recites a “tomographic modeling system” whereas the preamble for claim 1 recites a “system for tomographically modeling a dental structure.” Additionally, claim 13 recites that the controller be “adapted for creating, storing, and comparing 3D digital tomographic models of an object without the use of fiducial markers of said object.” The only differences between claim 21 and claim 1 is that claim 21 recites that the controller be “adapted for creating, storing, and comparing 3D digital tomographic models of an object without the use of fiducial markers of said object.” These differences are highlighted below.

Claim 1	Claim 13	Claim 21
A system for tomographically modeling a dental structure, the system comprising:	A tomographic modeling system comprising:	A system for tomographically modeling a dental structure, the system comprising:
a controller with a microprocessor and a memory device connected to the microprocessor, said controller being adapted for storing computed tomographic models of a dental structure;	a controller with a microprocessor and a memory device connected to the microprocessor, said controller being adapted for creating, storing, and comparing 3D digital tomographic models of an object without the use of fiducial markers of said object;	a controller with a microprocessor and a memory device connected to the microprocessor, said controller being adapted for creating, storing, and comparing 3D digital tomographic models of an object without the use of fiducial markers of said object;
an input device connected to the microprocessor;	an input device connected to the microprocessor;	an input device connected to the microprocessor;
a positioning motor connected to the microprocessor and responsive to commands from said microprocessor;	a positioning motor connected to the microprocessor and responsive to commands from said microprocessor;	a positioning motor connected to the microprocessor and responsive to commands from said microprocessor;
X-ray equipment including an X-ray source, a detector array, and a restricted beam device;	X-ray equipment including an X-ray source, a detector array, and a restricted beam device;	X-ray equipment including an X-ray source, a detector array, and a restricted beam device;
a convertor for converting a signal from said detector array, said convertor being connected to said	a convertor for converting a signal from said detector array, said convertor being connected to said	a convertor for converting a signal from said detector array, said convertor being connected to said

Claim 1	Claim 13	Claim 21
detector array and to said microprocessor; and	detector array and to said microprocessor; and	detector array and to said microprocessor; and
an output device connected to said microprocessor and adapted for receiving a tomographic model from said microprocessor.	an output device connected to said microprocessor and adapted for receiving a tomographic model from said microprocessor.	an output device connected to said microprocessor and adapted for receiving a tomographic model from said microprocessor.

Id. at 5:34–50; 6:45–61; 7:18–8:13.

3. Claims 7, 17, and 23

126. Claim 7, which depends from claim 1; claim 17, which depends from claim 13; and claim 23, which depends from claim 21, further recite a system "wherein said X-ray source emits an X-ray beam comprising a cone configuration." Id. at 6:14–15. The '374 patent admits that a cone configuration X-ray beam was known in the prior art:

> Examples of X-ray equipment adaptable for use with the present invention are disclosed in U.S. Pat. No. 5,533,080; No. 5,838,765; and No. Re. 36,162, which are incorporated herein by reference. The X-ray equipment 12 includes an X-ray beam source 14 and a detector array 16. The X-ray beam can be suitably collimated to assume any suitable configuration, such as fan, pencil, cone, etc."

See Id. at 4:27–33 (incorporating by reference No. Re. 36,162 ("Bisek") (Ex. 1026), which discloses both fan and cone beams).

4. Claims 2, 8, 14, 18, 22, and 24

127. Claim 2, which depends from claim 1; claim 8, which depends from claim 7; claim 14, which depends from claim 13; claim 18 which depend from claim 17; claim 22, which depends from claim 21; and claim 24, which depends from claim 23, further recite a system "wherein said restricted beam device comprises a dual-energy level restricted beam device." *Id*. at 5:51–53; 6:16–18. The '374 patent admits that dual-energy level beam devices were known in the prior art: "The Bisek et al. U.S. Pat. No. Re. 36,162 discloses the use of dual-energy X-ray beams in medical densitometry applications. As discussed therein, dual-energy densitometry can result in a more accurate patient model." *Id*. at 5:18–22.

5. Claims 3 and 9

128. Claim 3, which depends from claim 1, and claim 9, which depends from claim 7, further recite a system "wherein said tomographic model received by said output device is a 3D tomographic model." *Id*. at 5:54–56; 6:19–21.

6. Claims 4, 10, 16, and 20

129. Claim 4, which depends from claim 1; claim 10, which depends from claim 7; claim 16, which depends from claim 13; and claim 20, which depends from claim 7 further recite a system "wherein: said x-ray source travels along a single axis; and said x-ray source simultaneously rotates around said single axis." *Id*. at 5:57–60; 6:22–25; 7:1–4; 7:13–16.

7. Claims 5 and 11

130. Claim 5, which depends from claim 1, and claim 11, which depends from claim 7, further recite a system "wherein: said controller is adapted for storing a first tomographic model and a second tomographic model; said first tomographic model is a preexisting, commercially available standard model; said second tomographic model is a current patient model; and said controller is further adapted to compare said first tomographic model with said second tomographic model." *Id*. at 5:61–6:3; 6:26–35. In the section titled "Background of the Invention," the '374 patent admits that the comparison of digital BMD patient models to standard models was known in the prior art. "For example, BMD images use color to identify varying densities. Digital BMD patient models are also used for comparison purposes with standard models and with patients' own prior BMD histories." *Id*. at 2:25–28.

8. Claims 6 and 12

131. Claim 6, which depends from claim 1, and claim 12, which depends from claim 7, further recite a system "wherein: said controller is adapted for storing a first tomographic model and a second tomographic model; said first tomographic model is a preexisting patient model; said second tomographic model is a current patient model; and said controller is further adapted to compare said first tomographic model with said second tomographic model." *Id*. at 6:4–13;

6:36–44. The ’374 patent admits that the comparison of digital BMD patient models with patients’ own prior BMD histories was known in the prior art. “For example, BMD images use color to identify varying densities. Digital BMD patient models are also used for comparison purposes with standard models and with patients’ own prior BMD histories.” *Id*. at 2:25–28.

9. Claims 15 and 19

132. Claim 15, which depends from claim 13, and claim 19, which depends from claim 17 (which in turn depends from claim 13), further recite a system “wherein said controller is adapted to compare a pre-existing tomographic model with a current tomographic model.” *Id*. at 6:65–68; 7:10–12. The ’374 patent admits that the comparison of digital BMD patient models with both standard models and the patients’ own prior BMD histories was known in the prior art. “For example, BMD images use color to identify varying densities. Digital BMD patient models are also used for comparison purposes with standard models and with patients’ own prior BMD histories.” *Id*. at 2:25–28.

VIII. THE ’301 PATENT

A. Background of the Invention and Related Art Described in the ’301 Patent

133. The ’301 patent, titled “Dental and Orthopedic Densitometry Modeling System and Method,” states that it was filed on December 1, 1999.

Ex. 1002 at [54], [22]. I have been informed by counsel that the priority date of the ’301 patent is its filing date.

134. The specification of the ’301 patent is substantively identical to that of the ’374 patent. Accordingly, the discussion above in Section VII.A regarding the ’374 patent applies equally to the ’301 patent.

135. I have reviewed the patent file history of the ’301 patent. The ’301 patent issued from U.S. Patent Application No. 09/452,348. While that application was pending before the Patent Office, the Patent Examiner rejected all of the then-pending claims as obvious. The Examiner explained that “applicant discloses that the state of the art in the medical field . . . in densitometry procedures, measuring bone morphology density (BMD) is well known. Further . . . comparison with a patients [sic] own history is known. What applicant appears to believe is lacking is the use of such a system for dental tomographic imaging.” Ex. 1005 (April 9, 2001, Office Action) at 43. The Examiner concluded that “it would have been obvious to one of ordinary skill to apply the systems taught . . . to form the appropriate tomographic densitometry model to be outputted by the processor.” *Id.* at 44.

136. In response to the Examiner’s rejection of the claims, the applicant argued that use of “a microprocessor having a database that includes a patient’s unique and predetermined densitometry modeling parameters for comparison to the

patient's present densitometry model" was novel. Ex. 1005 (October 9, 2001 Response) at 48, 50, 55, 57. The Examiner then allowed the claims, stating in the reasons for allowance that "though the prior art discloses tomographic modeling for dentistry, it fails to teach or suggest . . . inputting or containing diagnostic parameters, including a preexisting densitometry model." Ex. 1005 (November 30, 2001 Notice of Allowability) at 67.

B. The Claims of the '301 Patent

137. I address below claims 1–8 and 10–20 of the '301 patent. It is my understanding that claim 9 has been held invalid in the Delaware proceedings.

1. Claim 1

138. Independent claim 1 of the '301 patent reads: A system for tomographically modeling dental and orthopedic structure densitometry, which includes:

a) A controller with a microprocessor and a memory device connected to the microprocessor, said controller including means for storing a pre-existing tomographical dental/orthopedic densitometry model;

b) an input device connected to the microprocessor;

c) a positioning motor connected to the microprocessor and movable in response to from said microprocessor;

d) X-ray equipment including an X-ray source and a detector array, and a restricted beam device;

e) conversion means for converting a signal from said detector array, said conversion means being connected to said detector array and to said microprocessor; and

f) an output device connected to said microprocessor and adapted for receiving a tomographical densitometry model from said microprocessor.

Ex. 1002 at 5:28–44. This claim incorporates the controller, input device, positioning motor, X-ray equipment, conversion means, and output device admitted as prior art in the ’301 patent.

2. Claims 2 and 13

139. Claim 2, which depends from claim 1, further recites a system “wherein said positioning motor is adapted for positioning said X-ray equipment with respect to three axes of movement.” *Id*. at 6:45–47.

3. Claim 3

140. Claim 3, which depends from claim 1, further recites a system “wherein said conversion means comprises an analog-to-digital convertor connected to said detector array.” *Id*. at 5:48–50.

4. Claim 4

141. Claim 4, which depends from claim 1, further recites a system "wherein said conversion means includes a merger device connected to said analog-to-digital converter and to said microprocessor." *Id*. at 5:51–54.

5. Claim 5

142. Claim 5, which depends from claim 1, further recites a system "wherein said X-ray equipment comprises a dual energy level, restricted beam device" *Id*. at 54–56. The '301 patent admits that dual-energy level, restricted beam devices were known in the prior art: "The Bisek et al. U.S. Pat. No. Re. 36,162 discloses the use of dual-energy X-ray beams in medical densitometry applications. As discussed therein, dual-energy densitometry can result in a more accurate patient model." *Id*. at 5:12–15.

6. Claim 6

143. Claim 6, which depends from claim 1, further recites a system "which includes: a) a preprogrammed scan path for said X-ray equipment, said scan path being programmed into said microprocessor." *Id*. at 5:57–60.

7. Claim 7

144. Claim 7, which depends from claim 1, further recites a system "wherein said output device includes a color monitor adapted to receive said tomographical densitometry model output color-coded to represent densitometry." *Id*. at 5:61–64. The '301 patent admits that color-coded BMD images were known in the prior art as of its priority date. *Id*. at 2:19–13 ("The availability of relatively

fast computers with large memories at reasonable costs has led to the digitalization of X-ray images for mapping BMD models in various formats. For example, BMD images use color to identify varying densities.”).

8. Claim 8

145. Claim 8, which depends from claim 1, further recites a system “wherein said output device include a color printer adapted to print images color-coded to correspond to the densitometry of said model.” *Id*. at 5:65–68.

9. Claims 10 and 20

146. Independent claims 10 and 20 are method claims and have very similar limitations to the system recited in claim 1—including a controller, input device, positioning motor, X-ray equipment, convertor, and output device—and to each other. Claim 20 recites some additional steps that claim 10 does not recite. The difference between claims 10 and 20 are highlighted below.

Claim 10	**Claim 20**
A method of tomographically modeling dental and orthopedic densitometry, which includes the steps of:	A method of tomographically modeling dental and orthopedic densitometry, which includes the steps of:
a) providing a controller with a microprocessor and a memory device connected to said microprocessor;	a) providing a controller with a microprocessor and a memory device connected to said microprocessor;
b) providing an input device connected to said microprocessor;	b) providing an input device connected to said microprocessor;
c) inputting patient diagnostic parameters with said input device;	c) inputting with said input device dental or orthopedic patient diagnostic

Claim 10	Claim 20
	parameters, including a pre-existing densitometry model;
d) storing said diagnostic parameters in memory;	d) storing said diagnostic parameters in said memory device;
e) providing X-ray equipment with an X-ray source and an X-ray detector array;	e) providing X-ray equipment connected to said microprocessor, said equipment including an X-ray source and an X-ray detector array;
f) positioning said X-ray equipment and a patients' dental/orthopedic structure relative to each other with said patient's dental/orthopedic structure between said source and said detector array;	f) positioning said X-ray equipment and a patients' dental or orthopedic structure relative to each other with said patient's dental or orthopedic structure between said source and said detector array;
g) emitting an X-ray beam from said source through said dental structure and to said detector array;	g) emitting an X-ray beam from said source at a first –ray beam energy level, passing same through said dental or orthopedic structure, and detecting same with said detector array;
h) outputting a signal from said detector array to said microprocessor;	h) outputting a signal corresponding to said detected X-ray beam from said detector array;
i) forming with said microprocessor a tomographical densitometry model of said dental/orthopedic structure;	i) digitizing said detector array output signal;
j) providing an output device connected to said microprocessor; and	j) storing said digitized output signal in said memory device;
k) outputting said densitometry model to said output device	k) storing said digitized output signal in said memory device;
	l) merging said stored output signals to form a present tomographical densitometry model of said dental or orthopedic structure;

Claim 10	Claim 20
	m) comparing said present densitometry model with said pre-existing densitometry model;
	n) adjusting said present densitometry model to account for patient parameters including age and gender;
	o) providing an output device connected to said microprocessor;
	p) color coding said present tomographical densitometry model with colors corresponding to dental or orthopedic structure density; and
	q) outputting said color-coded model to said output device.

Id. at 6:5–31, 7:5–8:26.

10. Claim 11

147. Claim 11, which depends from claim 10, further recites a method "which includes the additional steps of emitting, detecting, digitizing, and storing signals corresponding to first and second energy levels from said X-ray source." *Id*. at 6:32–35.

11. Claim 12

148. Claim 11, which depends from claim 10, further recites a method "which includes the additional steps of emitting, detecting, digitizing, and storing signals corresponding to first and second energy levels from said X-ray source." *Id*. at 6:32–35.

12. Claim 13

149. Claim 13, which depends from claim 10, which in turn depends on claim 10, further recites a method "which includes the additional steps of: a) providing a positioning motor connected to said microprocessor and to said X-ray equipment for moving same through three axes of movement along said scan path." *Id*. at 6:41–46.

13. Claim 14

150. Claim 14, which depends from claim 10, further recites a method "which includes the additional step of detecting incipient caries with said tomographical densitometry model." *Id*. at 6:47–49.

14. Claim 15

151. Claim 15, which depends from claim 10, further recites a method "which includes the additional step of detecting dental fractures with said tomographical densitometry model. *Id*. at 6:50–52.

15. Claim 16

152. Claim 16, which depends from claim 10, further recites a method "which includes the additional step of detecting apical abscesses with said tomographical densitometry model. *Id*. at 6:53–55.

16. Claim 17

153. Claim 16, which depends from claim 10, further recites a method "which includes the additional step of analyzing the extent of osseointegration of a

dental or orthopedic prostheses with respect to a patient's dental or orthopedic structure with said tomographical densitometry model. *Id*. at 6:56–60.

17. Claim 18

154. Claim 18, which depends from claim 10, further recites a method "which includes the additional step of comparing said patient's current densitometry model to pre-existing densitometry model." *Id*. at 6:61–63.

18. Claim 19

155. Claim 19, which depends from claim 10, further recites a method "which includes the additional steps of: a) providing a color output device connected to said microprocessor; and b) color coding said densitometry model in colors corresponding to the patients' dental or orthopedic structure density and outputting said densitometry model to said output device." *Id*. at 6:61–63. The '301 patent admits that color-coded BMD images were known in the prior art as of its priority date. *Id*. at 2:19–13 ("The availability of relatively fast computers with large memories at reasonable costs has led to the digitalization of X-ray images for mapping BMD models in various formats. For example, BMD images use color to identify varying densities.").

IX. THE '262 PATENT

A. Background of the Invention and Related Art Described in the '262 Patent

156. The ’262 patent, titled “Dental and Orthopedic Densitometry Modeling System and Method,” states that it was filed on January 24, 2003. Ex. 1003 at [54], [22]. The ’262 patent lists related U.S. patent applications on its face, one of which resulted in the issuance of the ’301 patent. *Id*. at [63]. As discussed above, I have been asked by counsel to assume that the ’262 patent’s priority date is January 24, 2003, or alternatively, December 1, 1999. *See above* Section IV.A.

157. The ’262 patent’s specification includes the contents of the specifications of the ’374 and ’301 patents. My discussion above with respect to the ’374 patent’s background and related art applies equally here. The ’262 patent additionally describes “modified embodiment densitometry modeling systems” and “modified densitometry modeling methods and applications.” Ex. 1003 at 5:56–8:61.

158. The modified embodiment densitometry modeling system, as illustrated in Figure 3, comprises of a “computer 104,” with a “memory 110,” an “input device 104a,” and an “output device 104b.” *Id*. at 5:58–67. This “computer 104” is further connected to input devices 106 and 108. The ’262 patent discloses that the computer has “software 112,” for converting digital data into images for visual display on a “monitor 114” or that can be printed on “printer 116,” as well

as “software 118” for digitally comparing baseline and patient-specific dental and orthopedic densitometry models. *Id*. at 5:67–6:9.

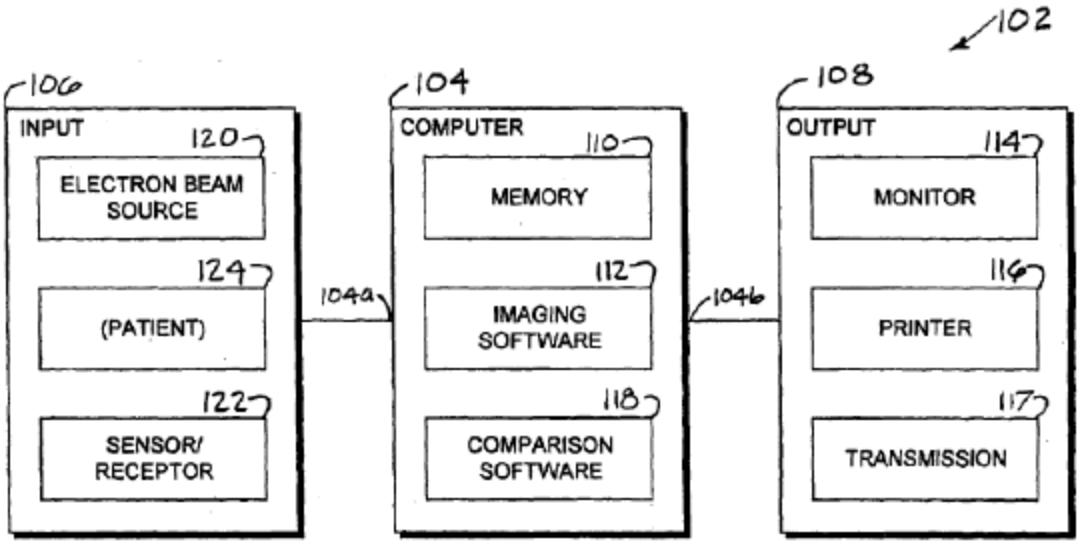

FIG. 3

159. The ’262 patent additionally discloses that the “input device 106” includes an “electron beam source 120” and a “sensor/receptor 122.” *Id*. at 6:10–11. The portion of the patient is positioned between “electron beam source 120” and “sensor/receptor 122.” *Id*. at 6:11–13. “Preferably, the electron beam source 120 emits a collimated electron beam adapted for scanning the patient’s dental/orthopedic structure.” *Id*. at 6:15–17. The ’262 discloses that “electron beam source 120” can be a variety of devices, including “wands” and “pens,” both handheld and mounted to articulated arm assemblies, and both hard-wired and wireless (RF). *Id*. at 6:17–28, 56–62. Likewise, the “sensor/receptor 122” can also

be a variety of sensors—X-ray film, charge coupled devices, and charged metal oxide semiconductor devices for example—positioned external or internal to the patient. *Id*. at 6:29–38.

160. Further, the ’262 patent discloses that “either or both of the beam source 120 and the sensor/receptor 122” can be preprogrammed for computer-controlled movement with respect to the patent.” *Id*. at 6:39–41. This equipment, the ’262 patent admits, is commercially available and typically moves through an arc of approximately 120 degrees for dental applications. *Id*. at 6:43–45.

161. The modified densitometry modeling and methods and applications of the ’262 patent include several dental applications. *See id.* at 8:3–57 (including the detection of incipient caries, implant osseointegration, dental forensics, fractures, decay, abscesses, plaque, and periodontal disease). Figures 6a and 6b are flowcharts illustrating the densitometry method with respect to an individual patient. After initializing the software, a population database/baseline, which can include densitometry data pertaining to the general population or a specific population group, is loaded into the computer. *Id*. at 7:44–48. A predictive patient model can then be generated from both population data as well as patient-specific information. *Id*. at 7:48–51. After using the system disclosed in the ’262 patent to image a patient, an initial patient model can be created. *Id*. at 7:59–63. This model can then be compared to a baseline model. *Id.* at Figure 6.

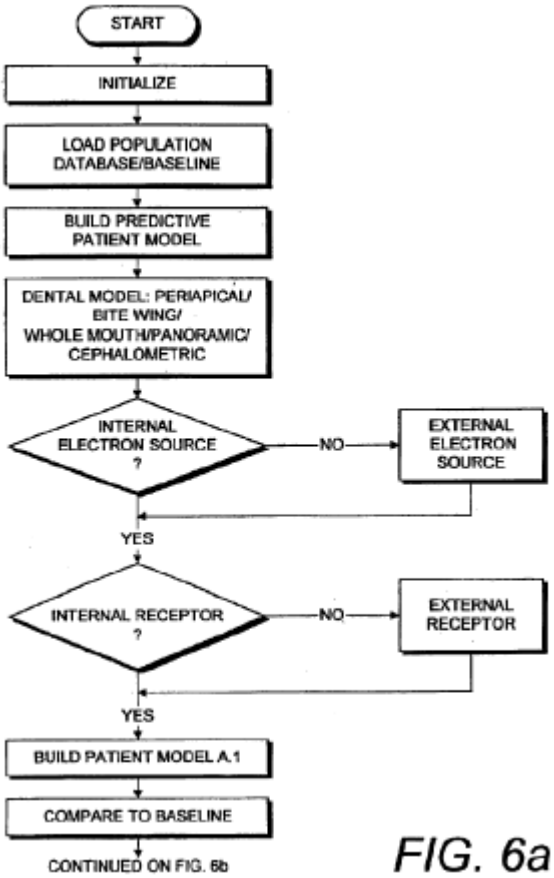

FIG. 6a

162. The ’262 patent then teaches that, at a different imaging session, a second model can be generated. *Id*. at 7:64. The computer software can then perform a comparison between the two patient-specific models, for example, identifying densitometry changes for the dentist or physician. *Id*. at 7:66–8:6.

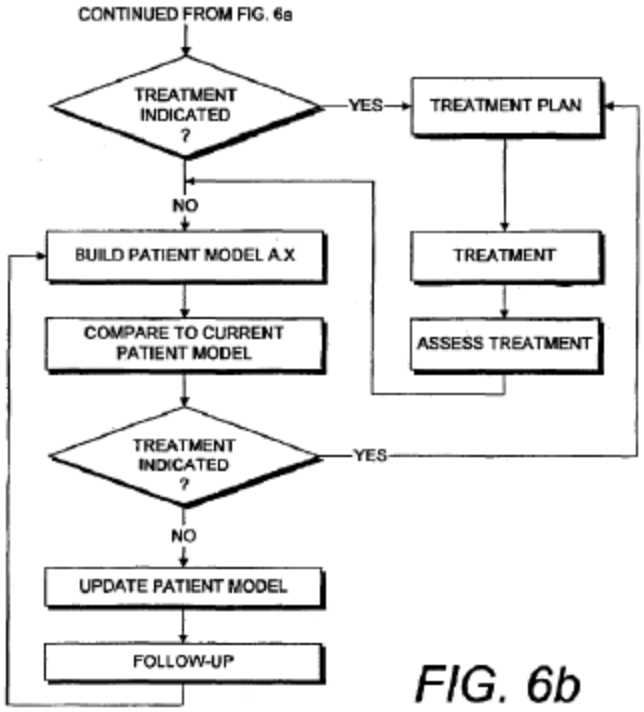

FIG. 6b

163. I have reviewed the file history of the ’262 patent. It is my understanding that the application leading to the ’262 patent was filed on January 24, 2003. The original application included 20 claims, but the patentee withdrew claims 7–20 and chose to proceed with claims 1–6 in response to the Patent Office’s requirement that the patentee choose between claims 1–6 (a densitometry generating system) and claims 7–20 (a dental database management method). Ex. 1006 (December 1, 2004 Non-Final Office Action) at 84, (March 1, 2005 Amendment) at 100–101.

164. In the same Patent Office correspondence, I understand that the Patent Office Examiner issued a rejection of claims 1–2 and 5–6 under 35 U.S.C. § 102(b) as being anticipated by U.S. Patent No. 4,941,164 (“Schuller”). *Id*. at 85–86. The

Patent Office Examiner stated that Schuller teaches a digital modeling system for creating dental or orthopedic models of patients, which comprises: (1) a computer with a digital memory adapted for storing patient densitometry information, (2) an input and output device, and (3) an energy source and energy sensor. *Id*. I have also been informed that the Examiner issued a rejection of claims 3–4 under 35 U.S.C. § 103(a) as being obvious over Schuller and U.S. Patent No. 4,104,532 ("Weiss"), which discloses an energy source that is intra-oral with an external sensor. *Id*. at 86–87.

165. In response to these rejections, the file history reflects that the patentee conducted an interview with the Examiner on February 9, 2005, and following the interview, amended claim 1 of the '262 patent to include "storing and comparing *three-dimensional* digital densitometry models *without the use of fiducial markers* of patient dental or orthopedic structure." Ex. 1006 (February 9, 2005 Interview Summary) at 96, (March 1, 2005 Amendment) at 100 (emphasis added). Schuller, the patentee argued, does not teach a three-dimensional image or model. Ex. 1006 (Interview Summary, February 9, 2005) at 96. Further, Schuller uses fiducial markers to align its images. *Id.* With this claim amendment, the Examiner allowed the claims on May 12, 2012. Ex. 1006 (Notice of Allowance, May 12, 2005) at 110–113.

B. The Claims of the ’262 Patent

166. It is my understanding that Dentsply is challenging claims 1–2, 4, and 6 of the ’262 patent.

1. Claim 1

167. Independent claim 1 of the ’262 patent reads: “A digital modeling system for creating dental or orthopedic models of patients, which system comprises:

> a computer including a digital memory storing patient densitometry information, an input and an output;
>
> a dental or orthopedic input device including an energy source and an energy sensor; said source and said sensor being placed with at least a portion of the patient’s dental or orthopedic structure there between;
>
> said sensor transferring signals to the computer input;
>
> said signals representing densitometry of the patient’s dental or orthopedic structure;
>
> said computer creating, storing and comparing three-dimensional digital densitometry models without the use of fiducial markers of patient dental or orthopedic structure;

an output device connected to said computer output and communicating densitometry model comparison information;

imaging software associated with said computer; and

a display associated with said output device and displaying information pertaining to said densitometry.

Ex. 1003 at 8:64–10:3.

2. Claim 2

168. Claim 2, which depends from claim 1, further recites a system "wherein said source is external." *Id*. at 10:4–5.

3. Claim 4

169. Claim 4, which depends from claim 1, further recites a system "wherein said sensor is external." *Id*. at 10:8–9.

4. Claim 6

170. Claim 6, which depends from claim 1, further recites a system "which includes: said energy being collimated." *Id*. at 10:12–13.

X. SUMMARY OF THE PRIOR ART

A. Arai

171. Arai is a patent filed on December 9, 1997, and issued on September 12, 2000. I therefore understand Arai is prior art to the ’301, ’374, and ’262 patents.

172. In the dental field, it is, in some cases, beneficial to generate a partial CT image of a specific site along the dental arch. Arai discloses an X-ray imaging apparatus that can conduct both partial CT imaging and panoramic tomographic imaging. *See* Ex. 1013 at Abstract; 2:1–14. Both systems individually, as discussed in Arai, were well-known as of December 1, 1999. X-ray panoramic imaging apparatuses were used in dental diagnosis to take tomographic images along the curve of a dental arch. *Id*. at 2:9–18. And X-ray CT apparatuses were used in medical diagnosis to take a tomographic image of a particular site of a human body. *Id*. at 1:18–27. Arai explains that while the apparatuses to perform X-ray panoramic imaging and X-ray CT imaging were separate systems in the prior art, an apparatus that could perform both types of imaging would be advantageous. *See id.* at 1:28–40. For example, in the field of dental diagnosis, it is helpful to know the thickness of the jawbone before a dental implant operation (requiring a partial CT image) as well as the overall structure of the jaw (requiring a panoramic tomographic image). *See id.* at 1:34–40. Using one imaging

apparatus to perform both types of imaging can be desirable as healthcare providers would only need to purchase and install one apparatus, thus potentially saving money and space.

173. Arai thus teaches X-ray imaging apparatus that can conduct local CT imaging in addition to panoramic tomographic imaging. *See id*. at 2:3–5 ("It is an object of the invention to provide an X-ray imaging apparatus which can conduct a partial CT imaging in addition to a panoramic tomographic imaging."). Arai also teaches that the apparatus may be also used solely for CT imaging: "[I]t is also possible to construct a dedicated partial X-ray CT imaging apparatus by omitting function of conducting the X-ray panoramic imaging in the dual-purpose X-ray imaging apparatus." *Id*. at 30:39–42.

174. The X-ray apparatus described in Arai comprises of an "apparatus frame 2" with a "base 4," "column 6," vertically movable "elevator frame 8" mounted on "column 6," and "object adjusting mechanism 10" with a "chin rest 12." *Id*. at 9:49–61. This frame supports "horizontal arm 16," which comprises "moving mechanism 20," "supporting means 18," and X-ray equipment. *Id*. at 10:3–9. This is depicted in Figure 1:

FIG. 1

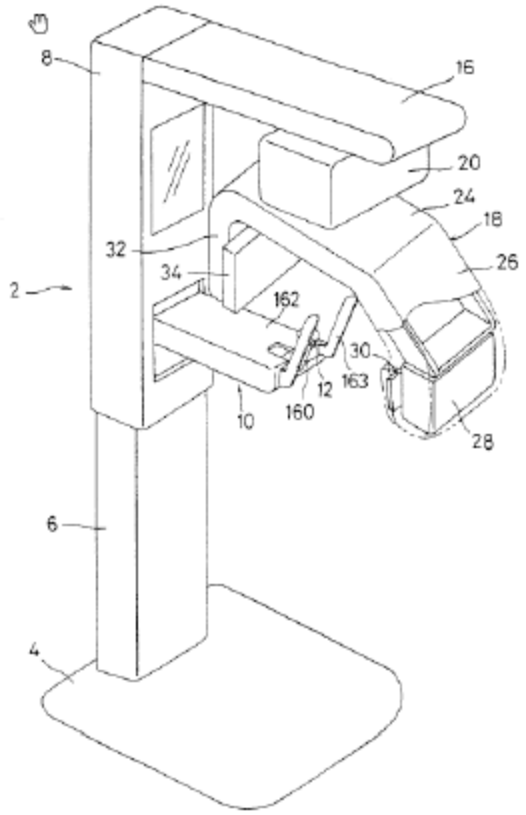

175. The "moving mechanism 20" comprises of an X-axis table for movement in the anteroposterior direction, a Y-axis table for movement in the lateral direction, and a rotation shaft that constitutes the rotation axis. *Id*. at 10:10–22. In addition to the vertical movement from the "elevator frame 8" (labeled below in Figure 1 in red), which adjusts the height of "horizontal arm 16," and subsequently the vertical height of the X-ray equipment, I understand that the X-ray equipment disclosed in Arai also moves in the X (labeled below in Figure 1 in green) and Y-directions (labeled below in Figure. 1 in blue) as well as rotates around a point of interest. The movement in the X and Y-directions allows the

object of interest to be positioned such that the area of interest coincides with the center axis of the rotation shaft.

FIG. 1

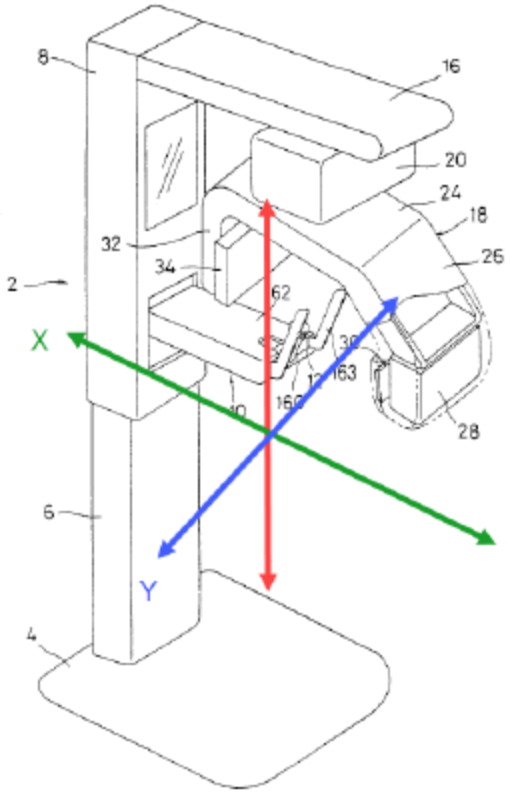

176. The X-ray equipment is positioned such that the imaged object is in between "X-ray source 28" and "image sensor 38." *Id*. at 10:41–43; *see* Fig. 2.

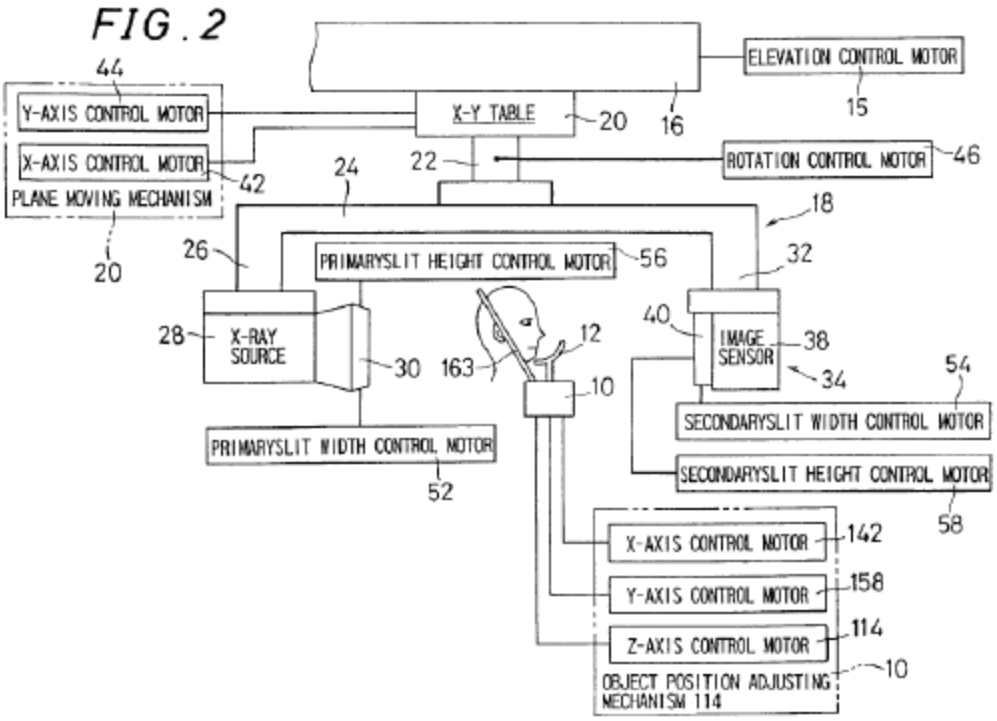

177. The movement of the X-ray equipment in Arai is controlled by "controlling means 170," which may be configured by a microprocessor. *Id*. at 14:48–56. "The controlling means 170 has operation controlling means 172 for controlling operations of various motors, which operation controlling means 172 include movement controlling means 173 for controlling operations of the X-axis control motor 42, the Y-axis control motor 44, and the rotation control motor 46 which constitute the moving means." *Id*. at 15:62–16:1; *see* Fig. 7. The "process information means 228" stores the CT process information for obtaining a partial CT image as well as the panorama process information for obtaining a panoramic tomographic image. *Id*. at 16:41–44. When an operator uses "switch 180" to select, for example, the CT mode, the "controlling means 170" controls operations

of various components, including the aforementioned motors, on the basis of the CT process information. *Id*. at 16:44–48. "That is, during the partial CT imaging process, the movement controlling means 173 of the operation controlling means 172 controls the operation of the rotation control motor 46 on the basis of the CT process information so that the X-ray source 28 and image sensor 38 are moved along a CT image formation locus." *Id*. at 16:49–54.

FIG. 7

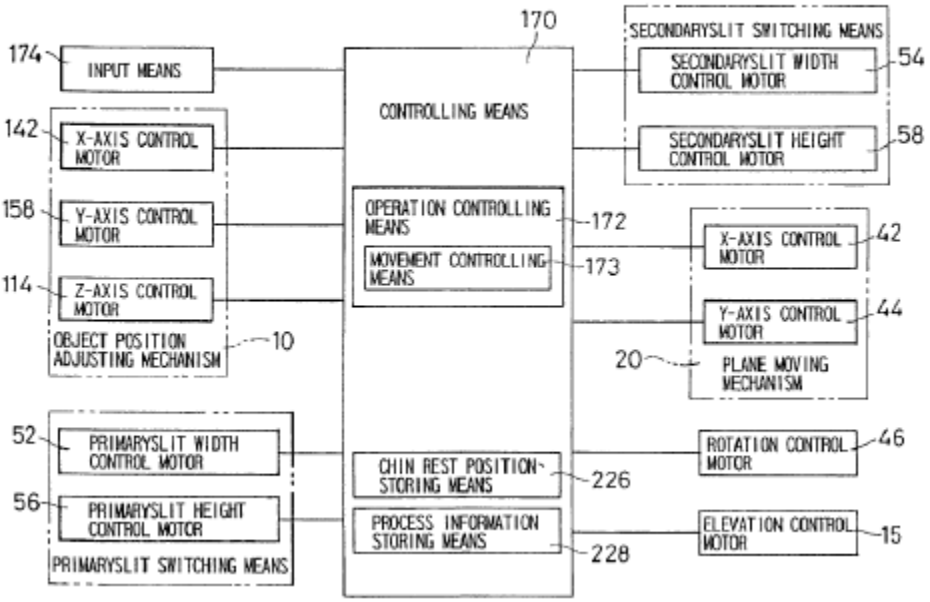

178. The X-ray equipment disclosed in Arai is a restricted beam device. "The primary slit means 30 restricts the width and height of X-rays emitted from the X-ray source 28, thereby preventing unnecessary X-rays from being emitted toward the object." *Id*. at 10:44–17. Arai further teaches that the X-rays from the "X-ray source 28" can be irradiated in a "cone-like shape or a pyramid-like shape through the primary slit means toward the imaging region." *Id*. at 38:54–57.

179. When obtaining an image, the X-rays from the "X-ray source 28" that pass through the object are detected by the "image sensor 38." Arai teaches that these image signals are then supplied to the "image signal processing means 236" for further processing. *Id*. at 17:29–32; Fig. 9. I understand that the "image signal processing means 236" itself may be configured by, for example, a microprocessor for image processing. *Id*. at 17:32–34. In the "image signal processing means 236," an analog-to-digital convertor first turns the analog signal from "image sensor 38" into a digital signal. *Id*. at 17:34–38 ("The image signal processing means 236 in the embodiment comprises A/D converting means 238 for converting an analog signal into a digital signal..."). This digital signal is then stored in "frame memory 240." *Id*. at 17:38–42. Plural sets of image information stored "frame memory 240" are stored in the "image memory for arithmetic 241," which takes these plural sets of image information and performs a predetermined arithmetic process—depending on the imaging mode—on them to generate a tomographic image of the selected mode. *Id*. at 17:42–48. Arai then teaches that the generated tomographic image can be displayed on "displaying means 248," stored in "external storing means 246," or both. *Id*. at 18:3–15.

FIG. 9

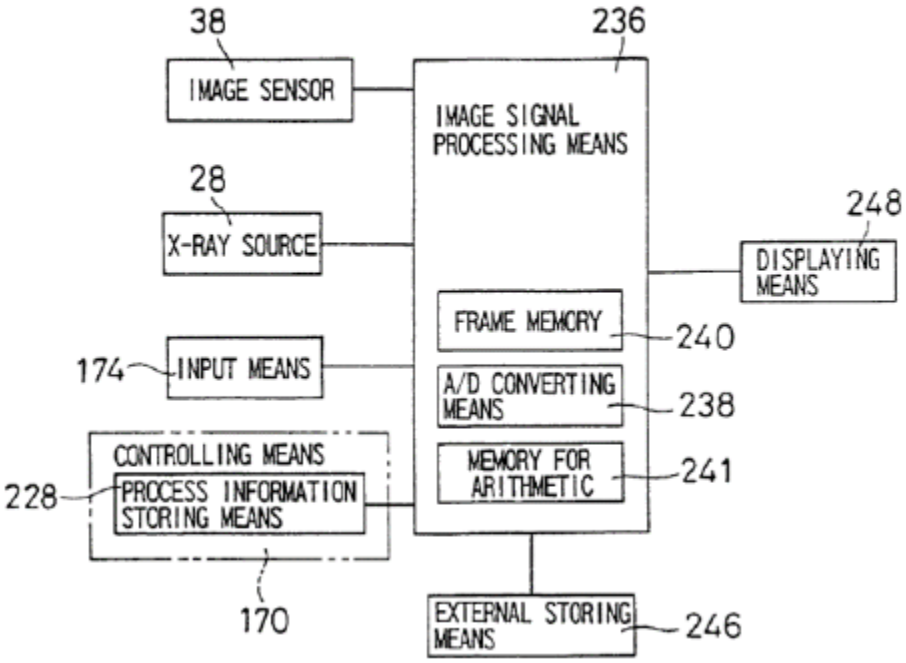

180. In the partial CT mode, the tomographic image generated by the system in Arai is a 3D image, consistent with the plain meaning of that term. *See* §§ VI.A.4 and 5. A POSA would understand that the tomographic images generated by the CT mode in Arai is 3D because Arai discloses use of cone-beam CT to generate "plural sets of image information" that are reconstructed to form a 3D model. Thus, a POSA reading Arai would understand that it generates 3D models or has the capacity to generate 3D models.

B. Cann

181. Cann is an August 1980 paper titled "Precise Measurement of Vertebral Mineral Content Using Computed Tomography" and published in the

Journal of Computer Assisted Tomography. Ex. 1014. I therefore understand that Cann is prior art to the ’301, ’374, and ’262 patents.

182. Cann recognizes that as early as 1980, “[q]uantitative bone mass measurements [were] widely used in the assessment of skeletal status in metabolic bone disease,” including “X-ray computed tomography (CT).” Id. at 493. “The usefulness of CT for measuring bone mineral in the vertebrae lies in its ability to quantitatively image a thin transverse slice through the abdomen.” Id.

183. Cann teaches techniques for improving both the accuracy and precision of such quantitative measurements. Cann states that “[t]he diagnostic capability of vertebral CT in metabolic bone disease depends on the accuracy of measurement of the bone mineral contained within the vertebral body.” Id. at 493. Cann teaches that the accuracy of the calculated attenuation coefficients corresponding to bone mineral content can be improved by using a dual-energy CT scan and by calibrating the system. Id. In particular with respect to the calibration, Cann gives an example of including in the scan two known references, such as a soft-tissue equivalent and a mineral or bone equivalent. Id. (“With this technique, a system is calibrated using two known standards such as water or Lucite (soft tissue equivalent) and K_2HPO_4 or aluminum (mineral equivalent). Projection data obtained at two different scan energies are combined to produce two sets of data that correspond to a ‘soft tissue’ image and a ‘mineral’ image.”). Cann discloses a

CT scan of vertebrae that further includes a "phantom" containing solutions for calibration purposes. Id. at 495, Fig. 2. Further, because "[h]igh measurement precision is necessary to provide sensitivity for small mineral changes in serial studies to assess the efficacy of treatment regimens or the progression of disease processes," Cann examines techniques to improve the quantitative precision of CT densitometry. Id. at 494. Cann first recognizes that dual-energy and phantom-calibration techniques are useful in improving precision. Id. at 493.

184. Cann further discusses a series of experiments using a CT machine and a simulated human torso to measure and determine additional strategies to improve the quantitative precision of CT measurements. See id. at 495. They used a phantom for calibration purposes, which enabled calculation of the mineral equivalent density of the bone in terms of mg K_2HPO_4/mL. Id; Table 1 (illustrating measurements in both CT number and mineral content). These experiments include:

- Determining the variation in measured mineral content due to errors in repositioning the same simulated patient;
- Studying the effects of slight positional differences in a region of interest (ROI) to determine the sensitivity of the mean CT number to the differences in ROI position;
- Studying the x-axis aspects of positioning reproducibility to determine the minimum z-axis positioning capability;

- Examining variation in CT number over the short term (minute to minute);
- Examining the effect using different scanners (same model) on CT number variation; and
- Determining the long-term reproducibility of scanning techniques by scanning a spine specimen several times over a period of months. *Id*. at 496.

185. Cann concludes from these experiments that precise measurements of vertebral mineral content in serial studies can be obtained by using software to position patients and scanning patients with a calibration phantom in the field. *Id*. at 499. Accordingly, Cann concludes, "[v]ertebral mineral content can now be measured precisely over the long term using CT." *Id.* at 497.

C. Pelc

186. International Publication No. WO 94/10908 (Ex. 1015, "Pelc") is a patent publication titled "Compact C-Arm Tomographic Bone Scanning System." Pelc was published on May 26, 1994. I therefore understand that it is prior art to the '374, '301, and '262 patents.

187. In general, Pelc discloses a system for "radiographic scanning or tomographic scanning of a patient for evaluation of bone density and bone morphology." Ex. 1015 at 1:15–17. This system is depicted in Figure 19:

FIG. 19

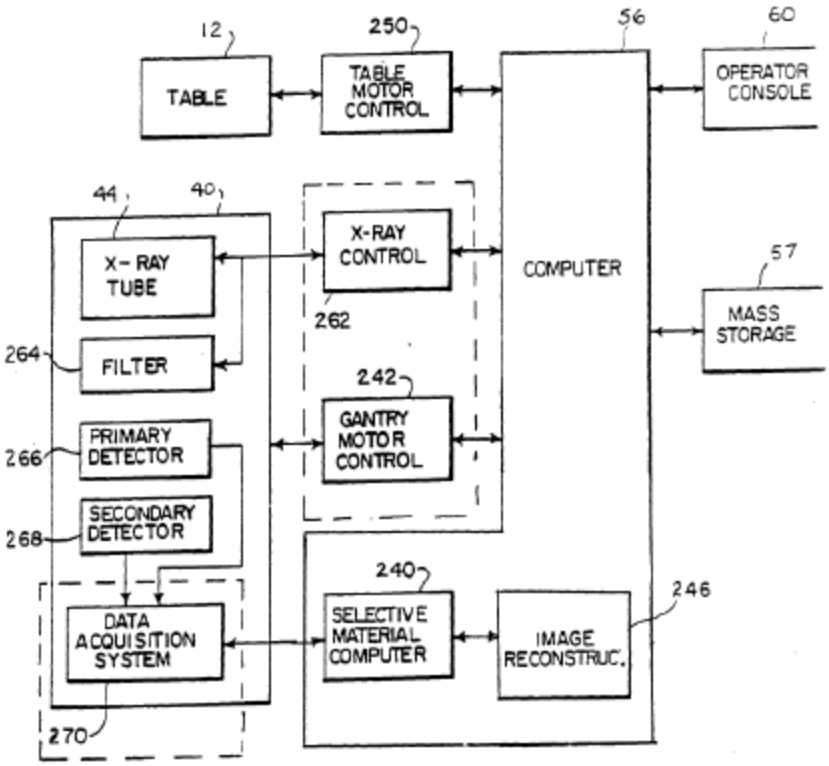

See also id. at 12:3–5 ("Fig. 19 is a block diagram of the components of the present invention showing the components employed for computed tomography.").

188. First, the Pelc system includes the basic X-ray equipment necessary for CT scanning. This equipment includes an X-ray source, an X-ray detector, and a beam-restricting device such as a slot collimator. Pelc refers to "a radiation source and a detector" that are "affixed to the ends of the C-arm to provide energy attenuation measurements along an axis between those ends at the plurality of angles, such measurements being received by an electronic computer." Ex. 1015 at 5:27–31; *see also* 16:23–36 (describing the detector). The X-ray source disclosed

in Pelc first emits a beam in a cone configuration, as shown in Figure 8 (annotated with red to show relevant feature).

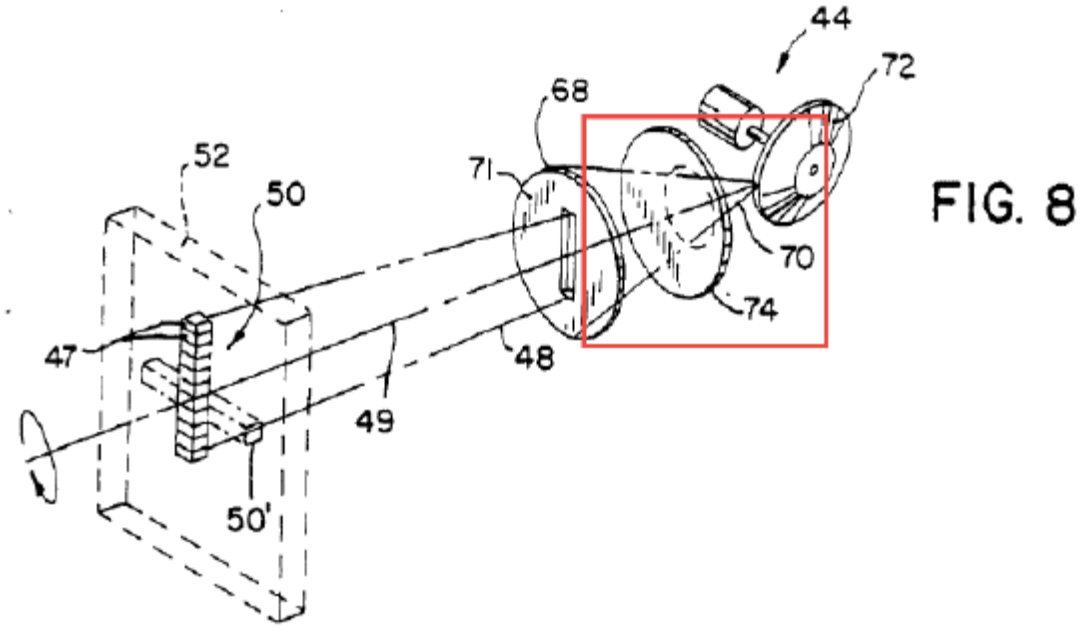

189. In the preferred embodiment of Pelc, the radiation source is a restricted beam X-ray source. Accordingly, the conical X-ray beam emitted by the radiation source is then collimated to create a fan beam. "[R]adiation source 44 [depicted in Fig. 8] . . . includes an x-ray tube together with filter and collimator . . . ." Ex. 1015 at 14:24–25; *see also id.* at 10:34–37 ("Fig. 8 is a [sic] exploded schematic view of the radiation source and a perspective view of the detector showing rotation of the fan beam by movement of a collimator and corresponding motion of the detector array."). The "collimator" is elsewhere defined as "slot collimator 68," which "incorporates a slot 71 defining the width and thickness of

the fan beam 48 . . . .” *Id.* at 22:10–11. This feature of the system is depicted in Figure 8, reproduced below (collimator identified by red box annotation):

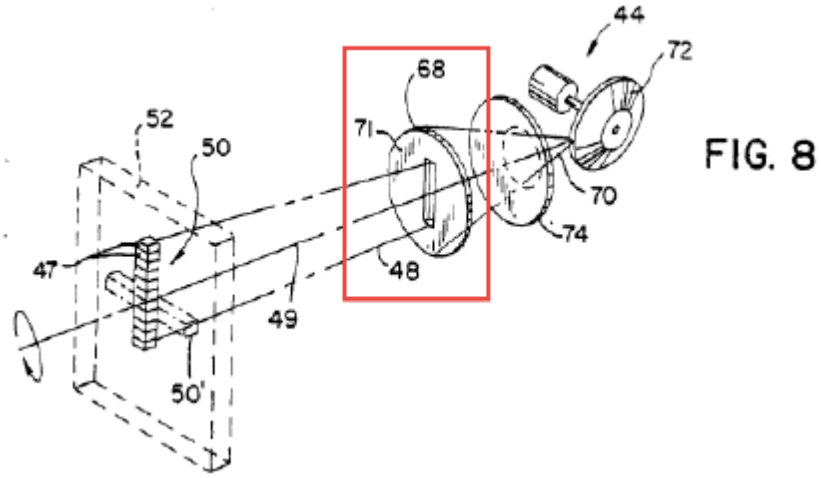

190. As Pelc explains, the radiation source 44 in conjunction with anode 72 emits “cone beam 70,” which is then collimated, i.e., restricted, by slot collimator 68. *Id.* at 22:10–14 (emphasis added). This is further illustrated by claim 7 of Pelc, which recites “an x-ray tube for producing a substantially conical beam of radiation and a slot collimator for collimating the conical beam to a planar beam . . . .” *Id.* at 45.

191. The X-ray equipment disclosed in Pelc further allows for dual-energy scanning. Pelc teaches that dual-energy techniques are desirable because they “quantitatively compare the attenuation of radiation at two energies to distinguish, for example, between bone and soft tissue” and “allow the measure of bone mass . . . .” Ex. 1015 at 2:14–17; *see also id.* at 6:25–29 (system “may produce separate attenuation measurements indicating attenuation at two energy levels.”). Section V

of Pelc describes dual-energy computed tomography in detail. *See generally id.* at 33–40. As Pelc recognizes, one of the benefits of such dual-energy scanning is that "[d]ual energy techniques allow the measure of bone mass . . . ." *Id.* at 2:16–17.

192. In order to generate the data necessary to generate a tomographic model of the desired structure, it is necessary for the X-ray source and detector to measure attenuation from multiple angles. Pelc therefore teaches the equipment necessary to move the source and detector in relation to the patient.

193. The X-ray equipment described above is housed on a rotating C-arm mounted on a gantry pallet. Pelc explains that the system "includes a track for moving a pallet with respect to a patient along a first and second perpendicular axis. A collar is attached to the pallet and holds a C-arm which may slide through the collar so that its ends rotate to one of a plurality of angles about the patient." Ex. 1015 at 5:24–27. The X-ray source and detector are mounted opposite each other on the C-arm. *Id.* at 27–31. The positioning of the C-arm is accomplished by "actuator 63," which is "driven by a stepper motor (not shown) so that it may operate under the control of computer 56 . . . ." *Id.* at 18:7–14 (emphasis added).

194. Pelc teaches that the positions of the movable aspects of the invention are controlled by motors linked to a "controller," discussed in greater detail below. For example, Pelc teaches that "[t]he control system of a CT imaging system

suitable for use with the present invention has gantry motor controller 242 which controls the rotational speed and position of the C-arm 40 and provides information to computer 56 regarding gantry position." *Id.* at 35:9-13 (emphasis added); see also *id*. at 35:28-31 ("The speed and position of table 12 . . . is communicated to and controlled by computer 56 by means of table motor controller 250.").

195. These positioning motors generate the movement required to obtain the data necessary for generating the tomographic model. As pertinent here, Pelc discloses that the X-ray source rotates around a single axis. "The fan beam and detector array may be mounted to the c-arm so that the fan beam and the detector array may rotate about a fan beam axis connecting the radiation source and the detector array." Ex. 1015 at 7:9–12. In other words, the source and detector, housed on the c-arm, may rotate about a single axis. Pelc further teaches that this system can simultaneously move along that axis of rotation (via "longitudinal rails 32"): "Referring to Figs. 1 and 9, the bed 28 includes two longitudinal rails 32 which form a track . . . and which allow the gantry pallet 34 to be positioned longitudinally along substantially the entire length of the densitometer 20 (as indicated by longitudinal axis 16.") *Id.* at 13:34–14:2; *see also* Figs. 1, 6, 9, 15, 18, 19. Pelc further depicts these features graphically. Figure 15 shows the rotation of the C-arm about the longitudinal axis of the system:

FIG. 15

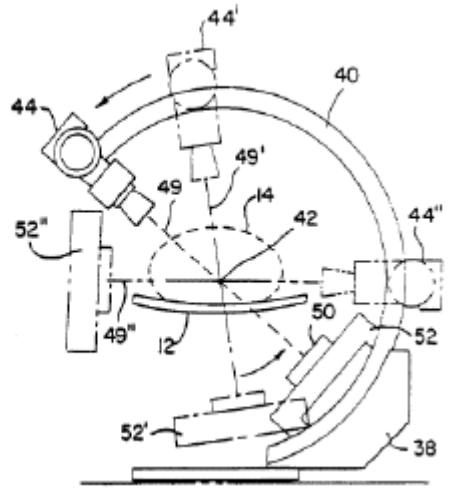

196. Pelc further discloses movement of the gantry pallet 34 and movement of the C-arm slider that allows for rotation of the source and detector about the pallet's axis of movement. *Id.* at 14. The rotation of the c-arm and movement of the gantry pallet can be simultaneous: "[t]ogether, motion of the pallet 34 and slider 36 permit a scanning by the detector 50 and radiation source 44 of the densitometer 10 . . . ." *Id.* at 14:32–34; *see also id.* at 21:18–35 (further describing the "rotation of the detector and fan beam).

197. An "electronic computer controls the C-arm, the radiation source, and the detector," Ex. 1015 at 5:31–33. Pelc later describes this as a "general purpose computer 56," Ex. 1015 at 35:17–21; *see also* Fig. 1, 9:35–10:2 (describing 56 as "a controlling computer"); 18:10–12 (describing a motor operated "under the control of computer 56"); 18:22–24 (describing a motor "controlled by the computer 56").

198. This system includes an analog-to-digital converter that converts the analog signal received by the X-ray detector into digital information suitable for processing by the computer. While this conversion is inherent to any CT device, Pelc further discloses, in its background section, that:

> The detector elements receiving the transmitted radiation produce electrical signals which may be converted to digital values by an analog to digital converter for the later development of an image or for other processing by computer equipment. The ability to quantify the measurement of the transmitted radiation, implicit in the digitization by the analog to digital converter, allows not only the formation of a radiographic 'attenuation' image but also the mathematical analysis of the composition of the attenuating material by dual energy techniques.

Ex. 1015 at 2:1–5 (emphasis added); *see also id.* at 33:34–34:16; Fig. 19.

199. The system is further adapted to process the collected data to reconstruct slices that can then be combined to form the tomographic model. Pelc teaches an "image reconstructor 246 (implemented in computer 56) which receives corrected attenuation data from the selective material computation circuit 240 and performs high speed image reconstruction according to methods known in the art." Ex. 1015 at 35:13–17. This is described schematically in Figure 19 of Pelc, reproduced below with red annotation to show the relevant features:

FIG. 19

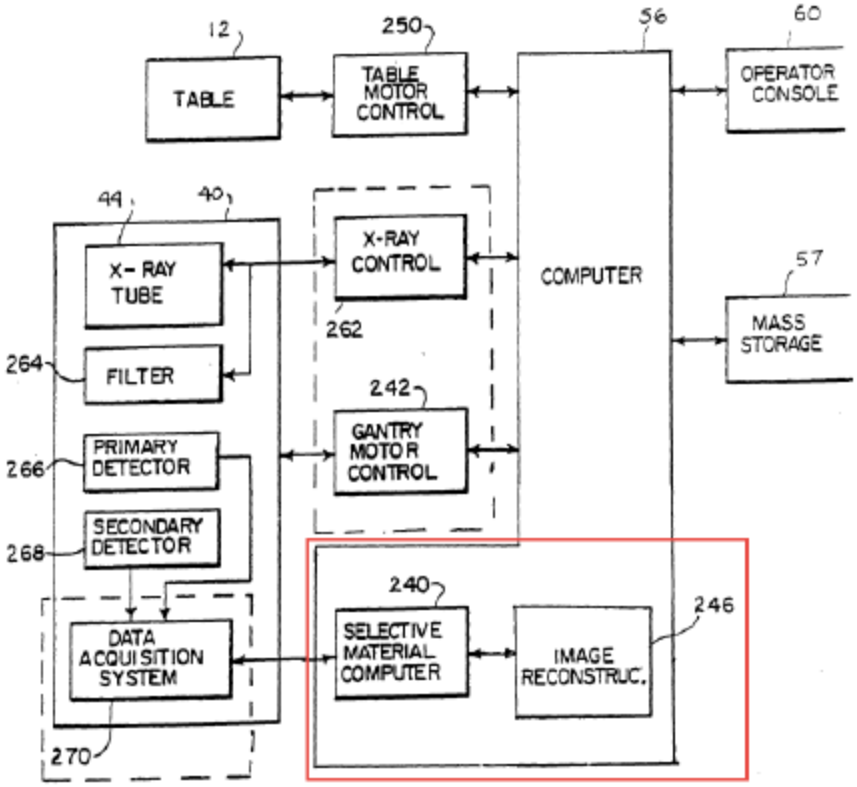

200. Pelc further teaches "[a] mass storage device 57" which is connected to computer 56 and which "provides a means for storing operating programs for the CT imaging system, as well as image data for future reference by the user." *Id.* at 36:1–3 (emphasis added). The POSA would understand that "image data" in this context is referring to the digital tomographic models described above.

201. Pelc also teaches an input device connected to a computer. Pelc discloses "a computer 56 having a display terminal 58 and a keyboard 60 such as are well known in the art." Ex. 1015 at 16:8–10. Pelc further discloses that "[t]he computer 56 . . . receives commands and scanning parameters via operator console

58 which is generally a CRT and keyboard which allows the user to enter parameters for the scan and to display reconstructed image and other information from the computer 56." Ex. 1015 at 35:31–36; *see also* Fig. 1; Fig. 19. This is consistent with Pelc's disclosure—discussed above—that the controller can be a "general purpose computer."

202. Finally, Pelc discloses an output device connected to the computer. Pelc refers to "[t]he computer 56," which "receives commands and scanning parameters via operator console 58 which is generally a CRT display and keyboard which allows the user to enter parameters for the scan and to display the reconstructed image and other information from the computer 56." Ex. 1015 at 35:31–36. Pelc further discloses that the "reconstructed slice images" generated by the computer "may be displayed on a conventional CRT tube or may be converted to a film record by means of a computer controlled camera." *Id.* at 4:17–20; *see also* Fig. 19 (reflecting the "Operator Console" 60, which includes the output device, connected to the computer). This output device, which is also an operator console that can control the CT device, is depicted in Fig. 1 (excerpted below). Ex. 1015 at 6:7-22.

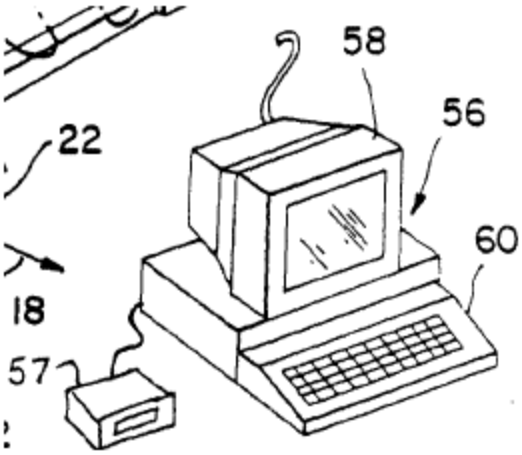

203. The tomographic model generated by the system disclosed by Pelc includes quantitative information regarding bone density. Pelc recognizes generally that one of the uses of the disclosed system is "evaluation of bone density and bone morphology." *Id.* at 1:15–16 (Field of the Invention). Pelc further discloses that "[s]uch bone density measurements are useful in evaluating the health of the bone and in tracking bone mineral loss in diseases such as osteoporosis." *Id.* at 27:9–11.

204. Finally, Pelc teaches the creation of a tomographic model assembled from at least two planes of data, generated from "images obtained at any two gantry angles having sufficient separation to provide the necessary third dimensions of information." *Id.* at 25:35–26:3.

D. Rothman

205. DENTAL APPLICATIONS OF COMPUTERIZED TOMOGRAPHY: SURGICAL PLANNING FOR IMPLANT PLACEMENT, by Stephen L. G. Rothman, MD

("Rothman"), was published in 1998. Rothman lists a copyright date of 1998 and was published by Quintessence Books, a well-known publisher. I therefore understand that it is prior art to the '374, '301, and '262 patents.

206. Rothman is a textbook that summarizes and synthesizes the state of the art with respect to CT imaging of dental structures. Rothman discloses that CT imaging is one of "[a] variety of diagnostic imaging techniques" that were available to the POSA. *Id.* at 3. The book highlights the extent to which such dental applications of CT imaging were well known: "In the last decade, computerized tomography has become one of the most frequently used imaging modalities for the preoperative evaluation of the jaw for dental implants." Ex. 1016 at 1. As Rothman explains, "[d]ental multiplanar reformatted computerized tomography (CT) is recognized as the most accurate method of portraying three-dimensional anatomy of the jaw . . . ." *Id.* at 154.

207. Rothman teaches that "[m]ost commercially available CT scanners are capable of producing the high-resolution images needed for the evaluation of the jaw for dental implants." *Id.* at 10–11. The reference further provides several examples of software capable of processing the collected data to create three-dimensional tomographic models of dental structures. *Id.* at 14–30. Rothman teaches that the dental applications of CT were a logical extension of the sagittal and spinal applications that "became standard in the early 1980s." *Id.* at 10–11.

As Rothman explains, "it was logical to adapt the same process to dental CT." *Id.* at 13.

208. In describing the application of this standard technology to dental imaging, Rothman describes a process that is typical of CT scanning generally and that would have been familiar to a POSA. "The patient reclines supine on the scanner table with his or her head immobilized in the scanner's head holder." Then, "[t]he scanning sequence is begun and all of the data are acquired very rapidly from a series of very thin axial sections." *Id.* at 14. "The total examination creates a series of 20 to 40 thin axial sections 1.0 mm apart." *Id.* Once the series of axial sections, or slices, has been gathered, the data can be reconstructed in a tomographic model of the patient's dental structures, *id.* at 14–15, which may include a "three-dimensional rendering of the jaw," *id.* at 26. Rothman further notes that "the data obtained during the CT scan can be fed into a personal computer, and treatment planning can be performed on the computer." *Id*. This data can include "[q]uantitative assessment of mineral content" in the mandible, *id.* at 57, which the POSA would understand to refer to densitometry modeling.

209. Rothman discusses several dental applications of CT, along with the reasons why such applications would be desirable. In the context of surgical planning, Rothman commends CT because:

- "CT scanners product very high-resolution images";

- "CT examination . . . permits the production of all possible cross sections from a single data acquisition without moving the patient or reconfiguring the x-ray machine"; and
- "with CT it is possible to generate three-dimensional images from the same data set."

Id. at 7. Rothman further discloses applications such as assessment of the osseointegration of an implant, *id.* at 114–22, assessing fractures, *id.* at 128, and assessing apical abscesses, *id.* at 54.

E. Xu

210. Xu (U.S. Patent No. 6,363,163) is a patent filed on February 23, 1998. It issued on March 26, 2002. I understand that Xu is prior art to the '301, '374, and '262 patents.

211. Xu teaches a method and system for the detection of interval change in medical images. Ex. 1019 at Abstract. Xu explains that, when "radiologists interpret a thoracic computed tomography (CT) scan of a patient, they commonly view it side by side with the most recent previous scan of the same patient." *Id*. at 1:56–58. This allows radiologists to identify interval changes or to assess the effectiveness of treatment on known lesions between two consecutive CT thoracic examinations. *Id*. at 1:59–62. However, Xu notes that it can be difficult and time consuming for radiologists to compare current and previous thoracic CT scans because "this requires a systematic visual search and correlation of a large number

of images (sections) in both current and previous scans." *Id*. at 1:62–2:1. This task can be further complicated because of variations in the images themselves due to patient positioning as well as patient breathing and cardiac pulsation. *Id*. at 2:6–12. While techniques for using computers to detect interval changes through temporal subtraction were know in the prior art, they had only previously been applied to two-dimensional imaging. *Id*. at 2:13–16.

212. Xu thus attempts to improve temporal subtraction of images, in particular for three-dimensional scans. *Id*. at 2:22–32 ("A second object of the invention is to enhance interval changes in images. A further object of the present invention is to perform automated temporal subtraction for three-dimensional scanning. Another object of the present invention is to perform automated temporal subtraction using matching images in the direction of scanning. A still further object of the invention is to three-dimensionally match corresponding sections of the two images."). These objects are achieved by a method, system, and computer program product for detecting interval changes. *Id*. at 2:33–36.

213. The method for detecting interval change taught in Xu generally includes, obtaining a first and second three-dimensional image of a subject (the first image typically a previous image of the subject and the second image typically a current image of the patient), matching the images, non-linearly warping the first image, and subtracting the first warped image from the second image. *Id*. at 2:36–

44 ("In the method according to the invention, first and second three-dimensional images of a subject are obtained. The first and second images are typically current and previous image of a subject. The first and second images are matched. The first image is non-linearly warped to produce a warped image and the warped image is subtracted from the second image. The subtraction can produce and/or enhance interval changes in the first and second images."); *see also id.* at 5:49–8:64 (describing how the temporal subtraction algorithm functions). Figure 1 is a flowchart of this method:

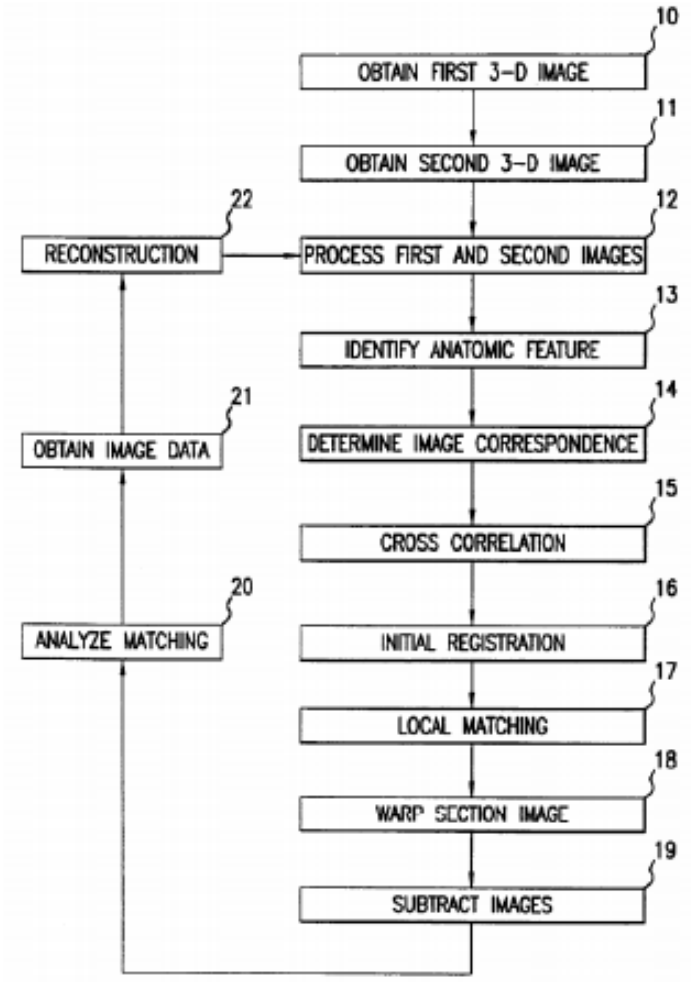

FIG. 1

214. Figures 11A–11C illustrate an example of temporal subtraction. *Id*. at 9:8–20. Figure 11A is a diagram of section images of a current scan; Figure 11B is a diagram of section images of a previous scan; and Figure 11C shows the subtracted section images. *Id*. at 4:38–42. The dark area indicated by arrows on 11C show that a mass increased in size from 3cm in the previous scan to 4cm. *Id.* at 9:8–14.

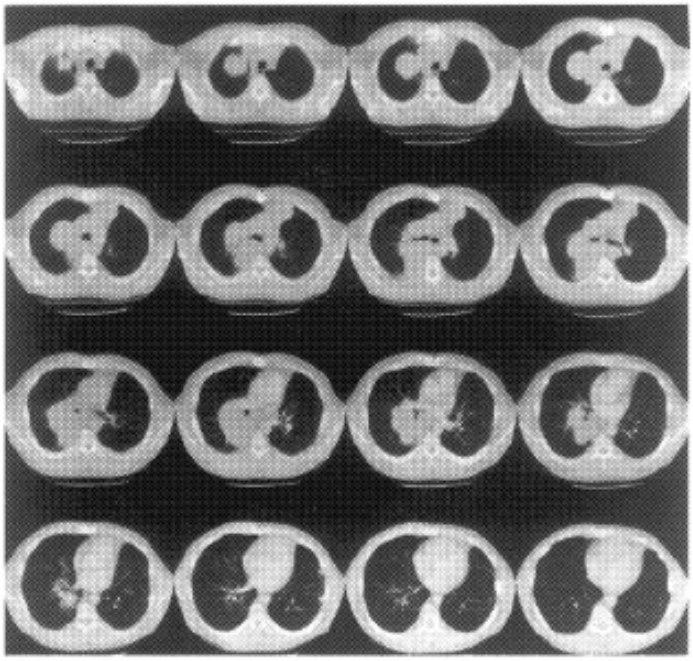

FIG. 11A

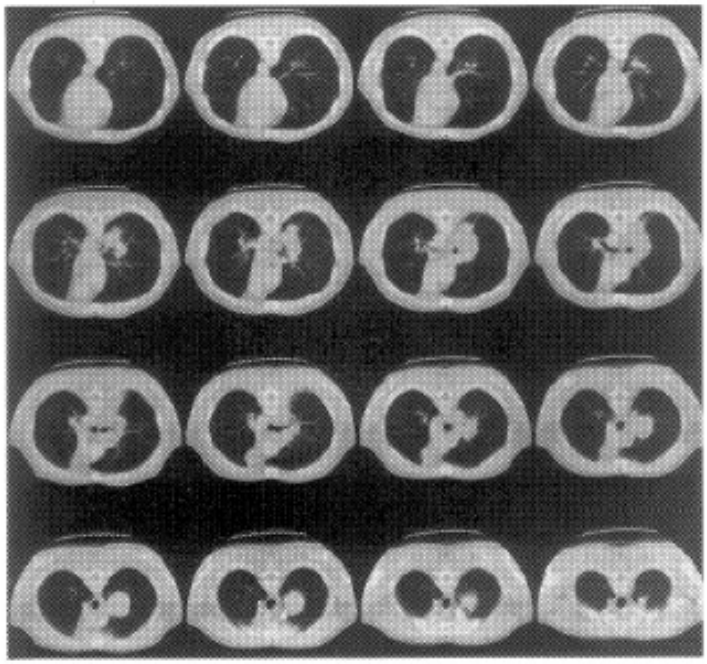

FIG. 11B

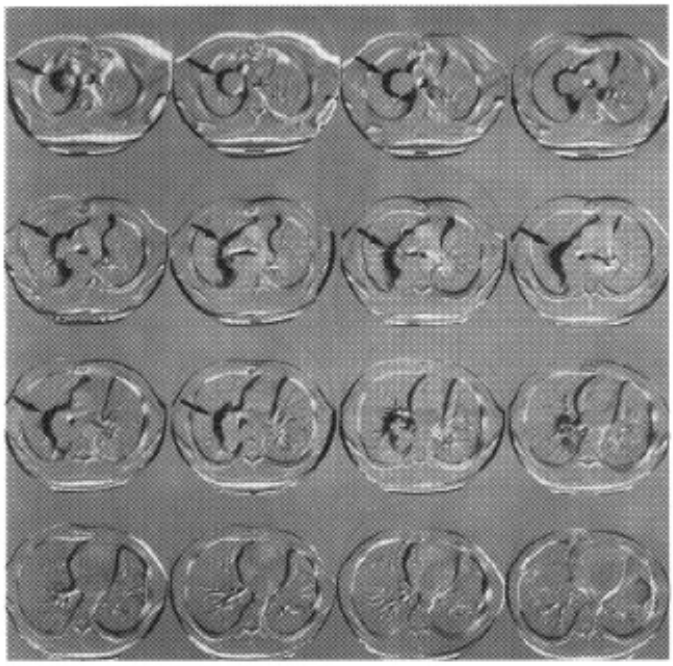

FIG. 11C

215. Xu teaches that the system itself comprises an "image acquisition device 100," which may be a CT scanner or an MRI scanner, with an "image storage device 101," which may be a memory device. *Id*. at 10:8–15; Fig. 13. An "image transfer device 102" transfers images from the imaging acquisition and storage devices to "image processing device 103," which carries out the method illustrated in Figure 1. *Id*. at 10:17–25; *see also id.* at 16:43–18:52 (reciting various claims covering computer algorithms that perform the method illustrated in Figure 1). A "controller 104," which may be a computer, controls the image acquisition, image storage, and image transfer devices. *Id*. at 10:26–27. "Controller 104" also controls the output or display of the images generated by the "image processing device 103." *Id*. at 10:27–29. Xu teaches that "output device

105" can be a video display terminal or a printer. *Id*. at 10:29–31. A "data entry device 106," such as a keyboard and pointing device, is further provided so a healthcare provider can insert commands into "controller 104." *Id*. at 10:31–34.

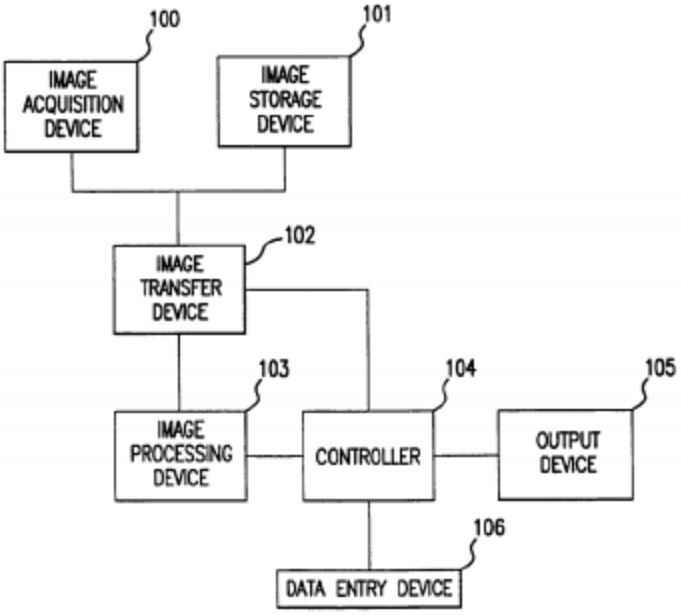

FIG.13

F. Milestone

216. Milestone, International Patent Publication WO 98/36683, was filed on February 25, 1997 and published on August 27, 1998. I understand that Milestone is prior art to the '301, '374, and '262 patents.

217. Milestone teaches a non-invasive process for analyzing the internal structure of a patient by creating three-dimensional models of a patient's internal structure from standard imaging techniques such as computed tomography or nuclear magnetic resonance. Ex. 1020, Abstract. "The selected portions of the

scanned and baseline data are preferably compared to determine whether an abnormality exists in the patient." *Id*.

218. Milestone explains that advancements in imaging technology have made it possible to non-invasively examine the internal structures of the human body. *See id.* at 1:13–5:5. One such non-invasive approach is volumetric rendering or three-dimensional rendering of CT or MRI images. But prior to the invention in Milestone, "volumetric or three dimensional rendering of internal structures [had] been used to provide either a static or dynamic depiction of the scanned objects," and the data collected had not been "utilized in combination with a computer software and/or hardware system for analyzing and diagnosing abnormalities." *Id*. at 5:5–9.

219. Milestone discloses a non-invasive process for analyzing an internal element in a body of a human or animal, comprising of the steps generally illustrated in Figure 3. As Milestone describes it: "The process involves scanning the body to acquire data representing a portion of the body's internal structure. The data is processed into three-dimensional volumetric data representing the scanned internal body element. A portion of the volumetric data is selected from the processed scanned data. Baseline data representing three-dimensional volumetric data for either a normal internal body element or the patient's actual internal body element as determined from previous scanning processes is also used

in the process. A portion of the baseline data is selected which corresponds to the selected portion of the scanned data. The selected portions of the scanned and baseline data are preferably compared to determine whether an abnormality exists in the patient. Output data is sent to a display for displaying information related to the selected portions of the scanned and normative data." *Id*. at 5:15–26.

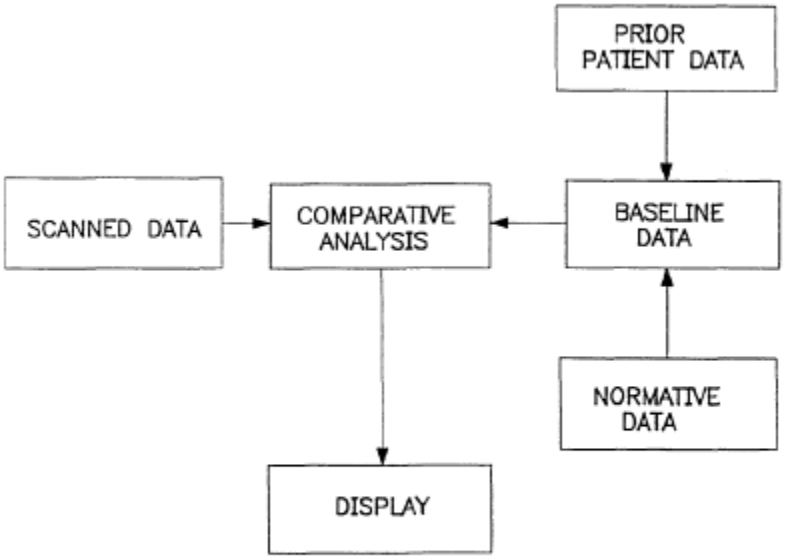

FIG. 3

220. Milestone also discloses an apparatus that can perform the previously mentioned method. This apparatus includes a scanner for scanning a portion of a body and a processor for receiving the scanned data. *Id*. at 5:34–6:1. The processor then converts the scanned data into a three-dimensional model and "compares the converted data to baseline data." *Id*. at 6:1–3. Milestone contemplates that various types of baseline data can be utilized, including previous

patient scans and scanned or stored data representing a "normal" structure. *Id*. at 10:26–11:12. A monitor is then used to display the comparison data. *Id*. at 6:3–5.

221. Milestone discusses examples of various applications of its method and apparatus, one of which is the detection of endobronchial masses in the lungs. Using its method and apparatus, the "processor compares the cross-sectional properties of the scanned bronchus and bronchioles (by order) to the cross-section of the baseline bronchus and bronchioles. If the processor determines that the cross-section of the scanned bronchi is sufficiently different than the baseline cross-section as indicated by the baseline data, the processor displays the location of the abnormality and its size." *Id*. at 13:17–22.

G. Pelc '080

222. Pelc '080, U.S. Patent No. 5,533,080, was filed on May 8, 1995 and issued on July 2, 1996. I therefore understand that Pelc '080 is prior art to the '301, '374, and '262. Indeed, the patents incorporate Pelc '080 by reference. Pelc '080 provides an example of a CT system as depicted below:

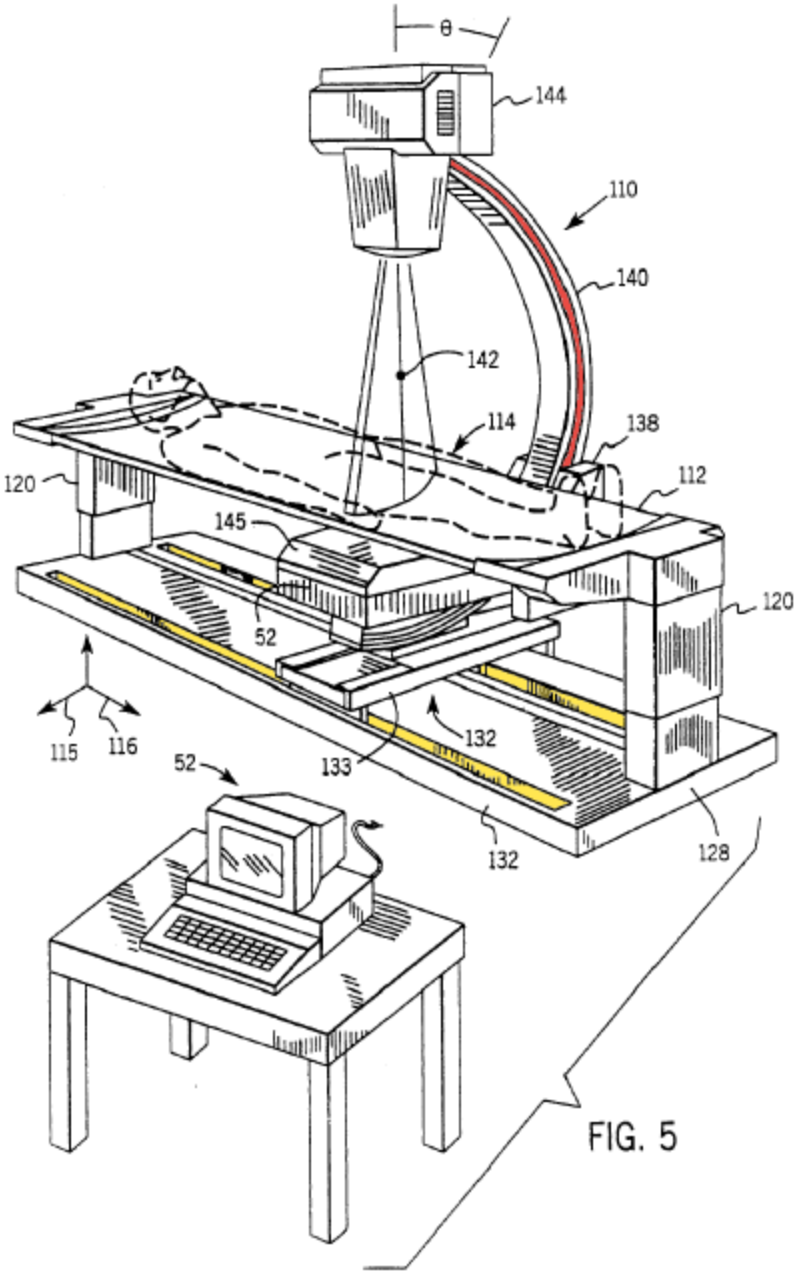

Ex. 1018 at Fig. 5 (annotated). As Pelc ’080 discloses, “[t]he gantry pallet 134 includes transverse rails 133 carried by rollers (not visible) fitted within the rails 132. Riding on the rails 133 of the gantry pallet 134 is a C-arm collar 138 which may be moved in the x-axis of the Cartesian coordinate system.” *Id.* at 9:57–61. The rails allowing for movement along the x-axis are highlighted above in yellow.

Pelc ’080 further discloses that “[c]ollar 138 is generally arcuate to enclose and slideably hold a C-arm 140 such that the ends of the C-arm may rotate about a center 142 as the body of the C-arm 140 slides through the collar 138. Motion of the C-arm 140 moves the radiation source 144 and detector array 145 about the center 142 by an angle θ.” *Id.* The C-arm collar therefore allows the X-ray source and detector to rotate about the x-axis. This feature is highlighted above in red.

XI. DETAILED OPINIONS REGARDING INVALIDITY GROUNDS OF THE ’374 PATENT

A. Anticipation by and Obviousness Over Arai

1. Claim 1

223. Claim 1 is an independent claim reciting: A system for tomographically modeling a dental structure, the system comprising:

> a controller with a microprocessor and a memory device connected to the microprocessor, said controller being adapted for storing computed tomographic models of a dental structure;
>
> an input device connected to the microprocessor;
>
> a positioning motor connected to the microprocessor and responsive to commands from said microprocessor;
>
> X-ray equipment including an X-ray source, a detector array, and a restricted beam device;

a convertor for converting a signal from said detector array, said convertor being connected to said detector array and to said microprocessor; and

an output device connected to said microprocessor and adapted for receiving a tomographic model from said microprocessor.

224. It is my opinion that Arai discloses each and every limitation of claim 1 and thus anticipates claim 1. It is further my opinion that claim 1 is rendered obvious by Arai in view of Cann.

a. "A system for tomographically modeling a dental structure, the system comprising:"

225. I understand that there may be a legal dispute as to whether the preamble to claim 1 is limiting. I do not offer an opinion on the legal question of whether it is, or is not, limiting. To the extent that the preamble of claim 1 is limiting, however, it is disclosed by Arai. Alternatively, it is obvious over Arai in view of Cann.

226. Arai discloses a CT system. "An object of the invention is to provide a dual-purposes X-ray imaging apparatus capable of partial CT imaging in addition to panoramic tomographic imaging." Ex. 1013 at Abstract; 2:3–5. "It is another object of the invention to provide an X-ray imaging apparatus which can conduct a local CT imaging." *Id*. at 2:6–7. "The X-ray imaging apparatus in FIG. 1 can

conduct an X-ray panoramic imaging, in addition to an X-ray CT imaging for a local site." *Id*. at 9:49–51.

227. Arai's CT system generates tomographic images. The CT system in Arai takes plural sets of image information and merges them to generate a tomographic image: "Plural sets of image information stored in the frame memory 240 are stored in the image memory for arithmetic 241. A predetermined arithmetic process corresponding to the selected imaging mode is conducted on image information read out from the image memory for arithmetic 241, ***thereby generating a tomographic image*** of the selected mode." *Id*. at 17:42–48 (emphasis added); *see also* 2:1–7 ("panoramic tomographic imaging"); 3:44–54 ("forming a tomographic image"); 3:55–67 ("a tomographic image corresponding to the selected imaging mode can be automatically obtained."); claims 2, 5–7, and 10–11.

228. These tomographic images generated by the CT system disclosed in Arai are of dental structures. *See id.*, Figs. 18, 19, and 24. Arai teaches that "[a]s compared with the prior art, therefore, the range of the imaging region is smaller and the apparatus is suitable as a partial X-ray CT imaging apparatus which conducts local CT imaging in the dental field." *Id*. at 7:32–36; *see also* 23:8–11 ("For example, an implant operation in the dental treatment can be easily

performed while observing the partial CT image displayed on the displaying means 248.”).

229. Further, Arai’s CT system is quantitative. As previously described in the background section on Computed Tomography, Section V.D., CT scanners such as the one disclosed in Arai take information from multiple scans to generate a CT number in Hounsfield units that provides information regarding the relative density of material being scanned. Bone, for example, has a value of 1000, water 0, and air -1000. Accordingly, while Arai may not explicitly mention densitometry or measuring bone density, a POSA would understand Arai to generate quantitative information regarding density. Further, as evident from the ’374 patent reference to Pelc ’080, a POSA would understand a CT system to be quantitative even if it does not explicitly disclose calculation of bone density. Ex. 1001 at 2:15–21. The underlying data disclosed in Pelc ’080, like Arai, is quantitative in nature because each voxel forming each tomographic slice has an integer, and thus quantitative, value.

230. Additionally, Cann teaches the use of CT imaging for quantitatively measuring bone mineral content. Ex. 1014 at 493 (“The usefulness of CT for measuring bone mineral in the vertebrae lies in its ability to quantitatively image a thin transverse slice through the abdomen. With this technique, one has the ability to spatially separate cortical and cancellous bone in the spine. Thus, one can

measure changes in bone mineral content (a) noninvasively, (b) in cancellous bone, where measurement of changes is more sensitive than in cortical bone, and (c) at the site of the clinical involvement, in the vertebrae.”).

231. It would have been obvious to a POSA to use the quantitative CT system taught in Arai for the densitometry measurements disclosed in Cann. Arai and Cann are both CT imaging systems. A POSA would want a system that is capable of delivering accurate and precise measurements of bone density, as disclosed in Cann. To that end, Cann discloses the use of a phantom for calibrating CT numbers to quantitative bone mineral density. A POSA would thus be motivated to use such a phantom in connection with the system of Arai. Arai itself further discloses that its system could be used in the field of dental diagnosis to determine the thickness of the jawbone prior to an implant operation. Ex. 1013 at 1:34–36. In addition to the thickness of the jaw, a POSA would recognize that knowledge of the density of the jawbone would also be helpful pre-implantation to assess whether the jaw can adequately support the implant as well as post-implantation to monitor osseointegration, and for that reason would be motivated to combine Arai with Cann as well. Moreover, one stated purpose in Arai of a dual-purpose X-ray imaging apparatus capable of partial CT imaging in addition to panoramic tomographic imaging is to save medical professionals money and space. *See id.* at 1:39–51. Adding a quantitative densitometrical function as described in

Cann would additionally save medical professionals money and space, providing further motivation to combine Arai and Cann. Finally, the features of Arai are suited to performing quantitative densitometry. Cann discloses a CT system similar in many respects to that Arai but with the addition of a phantom to more precisely calculate bone mineral density. Accordingly, a POSA would have had a reasonable expectation of success in using CT system in Arai to obtain the quantitative density measurements described in Cann by December 1, 1999 because any modification of the CT system to use a phantom would be minimal, i.e., inclusion of a phantom in the scan to correlate the CT numbers to a known value. For the same reasons, incorporation of the quantitative CT system taught by Cann would not impact any of the combinations discussed below.

b. "a controller with a microprocessor and a memory device connected to the microprocessor, said controller being adapted for storing computed tomographic models of a dental structure"

232. Arai discloses "a controller with a microprocessor and a memory device connected to the microprocessor." I understand that the Delaware Court's construction of "controller" allows for one or more controllers. *See* § VI.A.7. The controller disclosed in Arai comprises of "controlling means 170" and "image signal processing means 236."

233. "Controlling means 170" controls the movement of the X-ray equipment via a plurality of motors, including the X-axis control motor 42, the Y-

axis control motor 44, and the rotation control motor 46. Ex. 1013 at 15:62–16:1. Arai teaches that the "controlling means 170 may be configured by, for example, a microprocessor." *Id*. at 14:52–53. A POSA would understand this to mean that this microprocessor necessarily has at least a register memory device in order for the "controlling means 170" of Arai to carry out its stated functions. Arai further teaches that "controlling means 170" has a memory device, "process information storing means 228." *See id.*, Fig. 7 (depicting "controlling means 170," outlined in red, comprising of "process information storing means 228," outlined in blue). This process information storing means stores CT process information for obtaining a partial CT image. *Id*. at 16:41–42.

FIG. 7

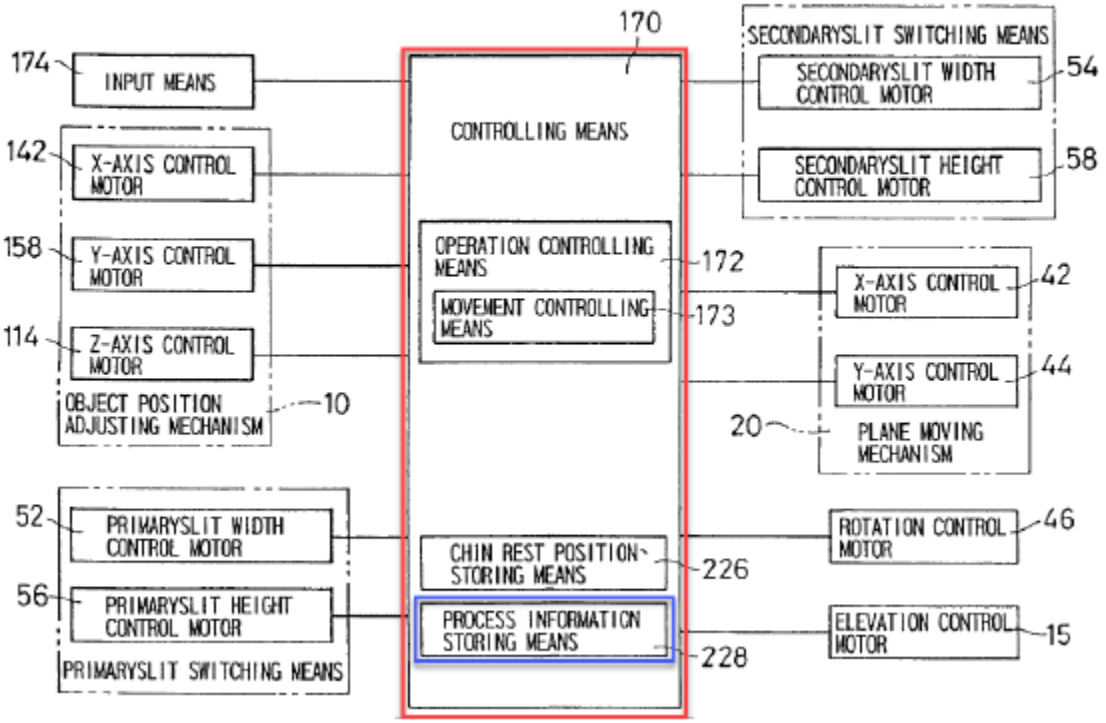

234. “Image signal processing means 236” controls the processing of the image signals generated by the X-ray equipment. *Id*. at 17:29–32 (“The image signal detected by the image sensor 38 is processed in the following manner. Referring to FIG. 9, the image signal output from the image sensor 38 is supplied to the image signal processing means 236.”). Arai teaches that the “image signal processing means 236 may be configured by, for example, a microprocessor for image processing. *Id*. at 17:32–34. Arai further teaches that “image signal process means 236” has memory devices, namely “frame memory 240” for storing image information, “memory for arithmetic 241” for storing tomographic images, and “external storing means 246” for storing tomographic images. *See id.*, Fig. 9 (depicting “image signal process means 236,” outline in red, comprising “frame memory 240,” outlined in blue, and connected to “external storing means 246,” also outlined in blue.”).

FIG. 9

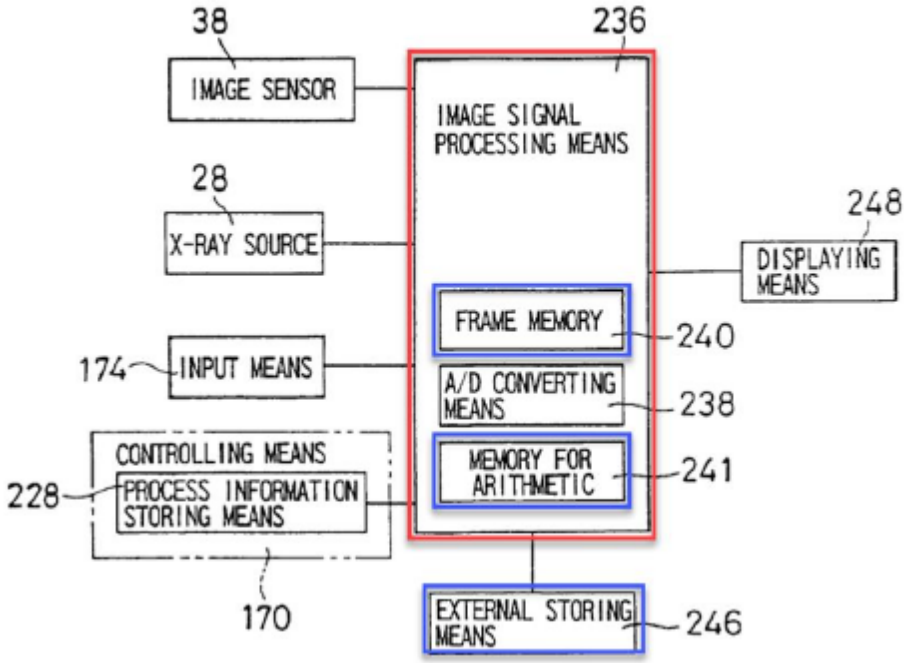

235. Arai further discloses "said controller being adapted for storing computed tomographic models of a dental structure." As discussed previously for the preamble, Arai discloses a CT system that generates tomographic models of dental structure. These models are stored in both "memory for arithmetic 241" and "external storing means 246." *Id*. at 17:42–48 ("Plural sets of image information stored in the frame memory 240 are stored in the image memory for arithmetic 241. A predetermined arithmetic process corresponding to the selected imaging mode is conducted on image information read out from the image memory for arithmetic 241. . ."); 18:11–12 ("Furthermore, external storing means 246 for storing a tomographic image is disposed.").

c. "an input device connected to the microprocessor"

236. Arai discloses "input means 174" and "operation panel 176," which can be used by the operator to choose the imaging mode and input information relating to the object to be imaged. *Id*. at 14:51–56 ("The controlling means 170 may be configured by, for example, a microprocessor, and controls the motors on the basis of a signal supplied from input means 174, as described later. In the embodiment, the input means 174 comprises an operation panel 176 which is shown in FIG. 8."); *see also* 16:10–14 ("The imaging position is determined in accordance with the imaging mode which is selected by the switches 180 and 182 which are disposed on the operation panel 176 (FIG. 8) and used for selecting the imaging mode."); 20:63–21:6 ("As described above, the positioning of the chin rest 12 is conducted by pressing the switches 186 to 210 of the operation panel 176, and by, if necessary, further pressing the switches 212 to 222. When the switches 186 to 210 are pressed to input information relating to the size of the object and the imaging site of the partial CT imaging, position information corresponding to the input information is read out from the object position information stored in the chin rest position storing means 226 of the controlling means 170."); Fig. 7 (depicting "input means 174"); Fig. 8 (depicting "operational panel 176"); Fig. 9 (depicting "input means 174").

d. "a positioning motor connected to the microprocessor and responsive to commands from said microprocessor"

237. Arai teaches "X-axis control motor 42," "Y-axis control motor 44," and "rotation control motor 46" for moving the X-ray imaging equipment. *Id*. at 11:23–26; 3:23–24. These positioning motors are responsive to commands from the microprocessor in "controlling means 170" via "operation controlling means 172" and "movement controlling means 173." *Id*. at 15:62–16:6 ("The controlling means 170 has operation controlling means 172 for controlling operations of various motors, which operation controlling means 172 includes movement controlling means 173 for controlling operations of the X-axis control motor 42, the Y-axis control 44, and rotation control motor 46 which constitute the moving means."); Fig. 7 (outlining the positioning motors in green, "controlling means 170" in red, and "operation controlling means 172" as well as "movement controlling means 173" in yellow).

FIG. 7

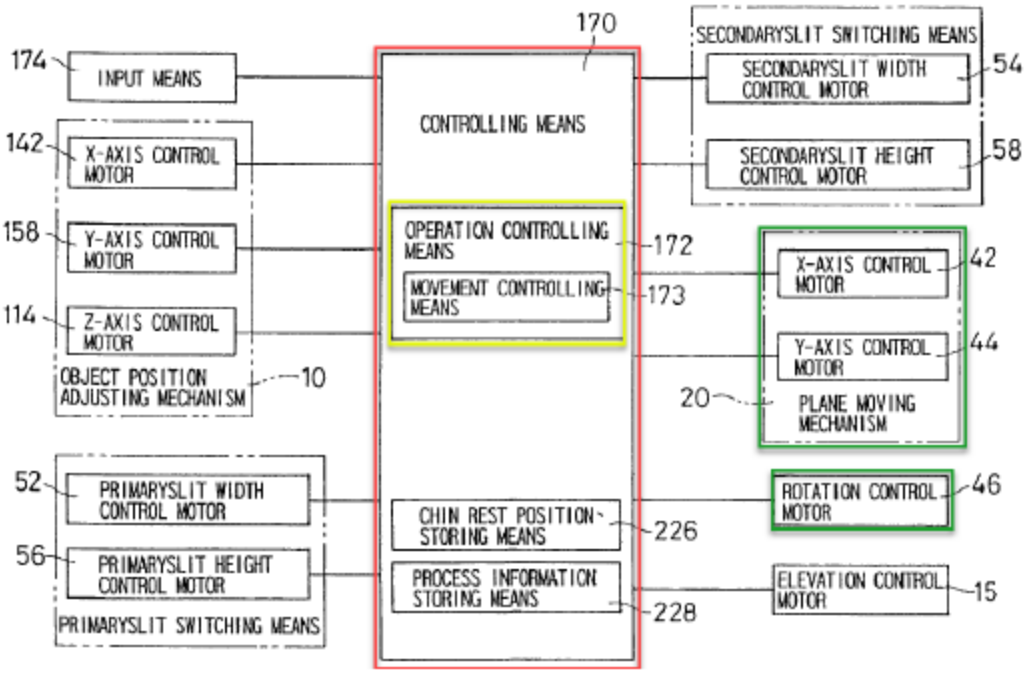

e. "X-ray equipment including an X-ray source, a detector array, and a restricted beam device"

238. The CT system in Arai comprises X-ray equipment including "X-ray source 28" and "image sensor 38." *Id*. at 2:15–18; Fig. 2. Arai teaches that "image sensor 38" is a detector array: "X-rays having passed through the object are detected by the image sensor 38." *Id*. at 10:47–49. Arai further teaches that the X-ray equipment includes a restricted beam device. "The primary slit means 30 restricts the width and height of X-rays emitted from the X-ray source 28, thereby preventing unnecessary X-rays from being emitted toward the object." *Id*. at 4:45–63.

239. Furthermore, the Food and Drug Administration (FDA) has required all diagnostic X-ray systems to use restricted beams to prevent unnecessarily exposing patients to large dosages of radiation. *See* 21 C.F.R. § 1020.31 at 566.

f. "a convertor for converting a signal from said detector array, said convertor being connected to said detector array and to said microprocessor; and"

240. Arai teaches "A/D converting means" for converting an analog signal from the detector array, "image sensor 38," into a digital signal. *See id.* at 17:38–42 ("The image signal supplied from the image sensor 38 to the image signal processing means 236 is converted into a digital signal by the A/D converting means 238 . . . ."). Figure 9 of Arai shows the A/D converter is connected to the detector array. It also shows that the converter is a part of, and thus connected to the microprocessor of "image signal processing means 236." *Id.*, Fig. 9 (outlining "image sensor 38" in grey, "A/D converting means 238" in purple, and "image signal processing means 236," which may be configured by a microprocessor in red).

FIG. 9

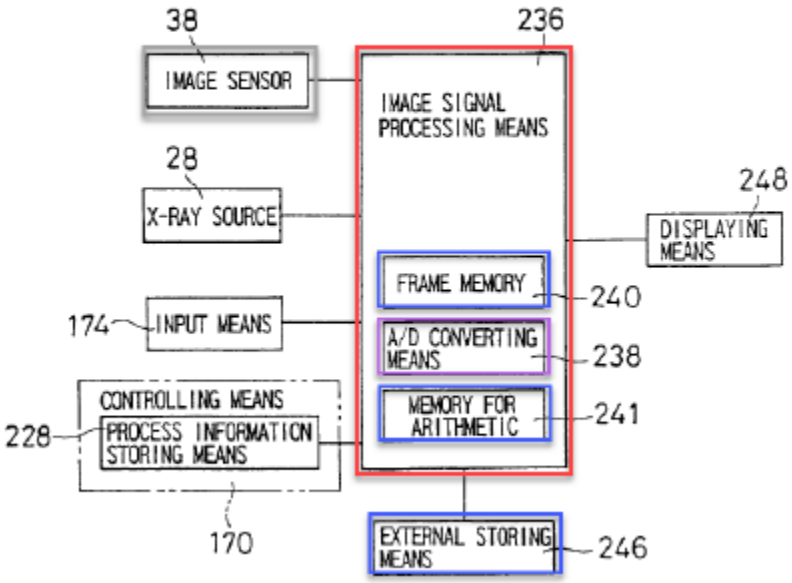

g. "an output device connected to said microprocessor and adapted for receiving a tomographic model from said microprocessor"

241. Arai teaches that "external storing means 246" and "displaying means 248" are output devices adapted for receiving a tomographic model from the microprocessor of "image signal processing means 236." I understand that the '374 patent describes "output device" broadly, including "a monitor, a display, a printer, a communications link, and/or another computer." Ex. 1001 at 4:45–48. Likewise, Arai also teaches that there are multiple output devices in its CT system. For example, Arai discloses that the "external storing means 246" may be "a hard disk apparatus or a magnetooptical disk apparatus." Ex. 1013 at 18:11–15.

2. Claim 7

242. Claim 7, which depends from claim 1, further recites "wherein said x-ray source emits an x-ray beam comprising a cone configuration."

243. It is my opinion that Arai discloses this limitation and thus anticipates claim 7. It is further my opinion that Arai renders claim 7 obvious (in combination with Cann, as discussed above with respect to claim 1). I address the POSA's motivation to combine and reasonable expectation of success in combining Arai with Cann above in connection with claim 1. *See* § XI.A.1.a. I incorporate that analysis here by reference.

244. Arai teaches "X-ray source 28" emitting a cone beam. *Id*. at 26:37–43 ("X-rays which are emitted from the X-ray source . . . irradiate the imaging region in a cone-like shape."); *see also* 7:19–32 ("X-rays emitted from the X-ray source are irradiated in a cone-like shape or a pyramid-like shape through the primary slit means toward the imaging region"); 26:47–43 ("X-rays which are emitted from the X-ray source and pass through the primary slit means 332 irradiate the imaging region 262 in a cone like shape").

3. Claims 2 and 8

245. Claims 2 and 8, which depend from claims 1 and 7 respectively, further recite "wherein said restricted beam device comprises a dual-energy level restricted beam device."

246. It is my opinion that Arai in combination with Cann renders claims 2 and 8 obvious. I address the POSA's motivation to combine and reasonable expectation of success in combining Arai with Cann above in connection with claim 1. *See* § XI.A.1.a. I incorporate that analysis here by reference.

247. As an initial matter, the '374 patent admits that dual-energy level CT devices were known in the prior art, and that they could provide a more accurate result: "The Bisek et al. U.S. Pat. No. Re. 36,162 discloses the use of dual-energy X-ray beams in medical densitometry applications. As discussed therein, dual-energy densitometry can result in a more accurate patient model." Ex. 1001 at 5:18–22.

248. Further, Cann discloses the use of dual-energy CT to improve the accuracy and precision of quantitative CT bone density measurements. "An alternative method for a beam-hardening correct is the use of dual-energy CT scans. . . . Projection data obtained at two different scan energies are combined to produce two sets of data that correspond to a 'soft tissue' image and a 'mineral' image." Ex. 1014 at 394. Thus the use of dual-energy CT scans to improve the precision of CT bone density measurements would have been well established as of the priority date of the '374 patent.

249. Thus it would have been obvious to a POSA to modify the CT system in Arai to use a dual-energy level restricted beam device in view of both Cann and

the knowledge of the prior art. Dual-energy imaging was already described in the prior art, including imaging of dental structures such as the mandible. *See* Ex. 1037 (Lindh) at 146–48. Accordingly, a POSA would understand that the use of a dual-energy restricted beam device could improve the accuracy and precision of Arai's CT system in measuring the bone density of dental structures. And, as discussed for claim 1, a POSA would have been motivated to combine the CT system in Arai with some of the well-known features described in Cann. *See* § XI.A.1.a. Specifically with respect to dual-energy imaging, Arai already teaches a CT system that performs scans at one energy level. A POSA would have had a reasonable expectation of success in using Arai to perform scans at a second energy level and modifying the processing algorithm in Arai to process data from scans at two energy levels. As evident from Cann, a POSA was well aware of how to perform and process data from dual-energy level scans. Thus, the required elements and programming could have been predictably incorporated into the Arai system.

4. Claims 3 and 9

250. Claims 3 and 9, which depend from claims 1 and 7, further recite a system "wherein said tomographic model received by said output device is a 3D tomographic model."

251. It is my opinion that Arai discloses this limitation and thus anticipates claims 3 and 9. It is further my opinion that Arai renders claims 3 and 9 obvious (in combination with Cann, as discussed above with respect to claim 1). I address the POSA's motivation to combine and reasonable expectation of success in combining Arai with Cann above in connection with claim 1. *See* § XI.A.1.a. I incorporate that analysis here by reference.

252. In the partial CT mode, the tomographic image generated by the system in Arai is a 3D image. *See* §§ VI.A.4 and 5. A POSA would understand that the tomographic images generated by the CT mode in Arai necessarily is 3D because Arai uses cone beam CT technology. Additionally, Arai discusses generating multiple datasets or "plural sets of image information" corresponding to multiple focal planes. These "plural sets of image information" are tomographic slices of the imaged region, which Arai further teaches are combined by "arithmetic 241," (software) to generate a tomographic model. And as previously discussed, combining tomographic slices to generate a 3D model is a routine aspect of CT imaging. Thus, a POSA reading Arai would understand that it generates 3D models or has the capacity to generate 3D models.

253. Moreover, the creation of three-dimensional models was obvious as of the priority date of the '374 patent. I understand that Osseo's counsel stated at a hearing in the Delaware litigation:

> One of ordinary skill in the art would know, at the time of the invention, how to take datasets and make 3D models out of them. It was known. We're not professing that that's the invention. It was known at the time, fairly well known by those of ordinary skill in the art how to make 3D models out of image datasets.

Ex. 1012 (SJ Hearing Transcript) at 21:21–22:4. Furthermore, prior art such as Milestone disclosed the creation of three-dimensional models before the priority date of the '374 patent. *See* Section X.F. Thus, a POSA would have been motivated to use the imaging system described in the Arai to create three-dimensional models, as these models can provide a more accurate representation of anatomical structures, particularly their orientation, which allows for more precise diagnosis and treatment of medical conditions. Further, a POSA would have had a reasonable expectation of success in doing so because using CT imaging system to generate three-dimensional images were commonplace. Finally, it would have been obvious to a POSA that the 3D models generated by the Arai system would be transmitted to (and received by) an output device, whether that be a CRT monitor or a storage device, because without such transmission the data would be of no use to the user.

5. Claims 4 and 10

254. Claims 4 and 10, which depend from claims 1 and 7 respectively, further recite a system "wherein said x-ray source travels along a single axis; and said x-ray source simultaneously rotates around said single axis."

255. It is my opinion that Arai renders claims 4 and 10 obvious (in combination with Cann, as discussed with respect to claim 1) and in further combination with Pelc '080, which discloses this limitation. I address the POSA's motivation to combine and reasonable expectation of success in combining Arai with Cann above in connection with claim 1. *See* § XI.A.1.a. I incorporate that analysis here by reference.

256. As an initial matter, I understand that the '374 patent concedes that this movement of X-ray equipment was known in the prior art: "The microprocessor 6 controls a positioning motor 10 which is operably connected to X-ray equipment 12 and is adapted for moving same through three axes of movement. Examples of X-ray equipment adaptable for use with the present invention are disclosed in U.S. Pat. No. 5,533,080; No. 5,838,765; and No. Re. 36,162, which are incorporated herein by reference." Ex. 1001 at 4:24-30. For instance, U.S. Patent No. 5,533,080 ("Pelc '080") (Ex. 1018) discloses a C-arm X-ray system that rotates around an axis and translates along that axis. *See* § X.G.

257. Arai describes a mechanism for adjusting the X-ray equipment in the vertical direction. Ex. 1013 at 57–59 ("The elevator frame 8 is mounted on the column 6 so as to be vertically movable, and vertically moved by an elevation control motor 15."). Arai also describes that its X-ray equipment can rotate around an axis centered through a point of interest. *Id*. at 11:10–23 ("The rotation shaft 22 is rotatably supported on the Y-axis table. In relation to the rotation shaft 22, a rotation control motor 46 which rotates the rotation shaft and which constitutes rotating means is disposed . . . and the rotation of the rotation control motor 46 enables the supporting means 18 to be rotated about the axis which vertically elongates, with respect to the horizontal arm.").

258. While Arai does not explicitly disclose simultaneous vertical movement and rotation, a POSA would have been motivated to use the Arai apparatus in such a way as described in Pelc '080. Doing so would allow a healthcare provider to use Arai to image a greater portion of the object—for example the entire head instead of just the jaw. Making this modification would have been well within the skill of a POSA, particularly since all the equipment to make this modification is already taught in Arai. The CT systems in Arai and Pelc '080 share many similar features—radiation source and sensor, collimated beam, microprocessor, and reconstruction software—as was common to CT systems at the time. *See, e.g.*, § V.D. And a POSA would have been aware of software

available at the time to process the information gathered from a scan conducted as described in Pelc ’080 (where the x-ray source travels along a single axis and simultaneously rotates around that axis) with the cone beam equipment described in Arai’s CT system. *See* Ex. 1036 (Noo) at 541–42 (describing the algorithm for reconstructing the data acquired from circle-plus-line orbits in cone beam CT); *see also* Ex. 1021 (Bushberg) at 260–62 (describing a helical CT).

6. Claims 5 and 11

259. Claims 5 and 11, which depends from claims 1 and 7 respectively, further recite “said controller is adapted for storing a first tomographic model and a second tomographic model; said first tomographic model is a preexisting, commercially available standard model; said second tomographic model is a current patient model; and said controller is adapted to compare said first tomographic model with said second tomographic model.”

260. It is my opinion that Arai renders claims 5 and 11 obvious (in combination with Cann, as discussed above with respect to claim 1) and in further combination with Xu and/or Milestone, which disclose these limitations. I address the POSA’s motivation to combine and reasonable expectation of success in combining Arai with Cann above in connection with claim 1. *See* § XI.A.1.a. I incorporate that analysis here by reference.

261. This limitation relates to the comparison of two tomographic models. As of the priority date of the ’374 patent, it was well-known to a POSA that a microprocessor could be programmed with software to perform comparisons between a patient’s current scan and standard models or between a patient’s current and past scans. *See, e.g.*, Ex. 1001 at 2:26–31.

262. For example, U.S. Patent No. 6,363,163 (“Xu”) (Ex. 1019), titled “Method and system for the automated temporal subtraction of medical images,” teaches a system for detecting interval change in medical images. Xu teaches a system for detecting subtle interval changes in sequentially obtained images, which might be missed by radiologists. Ex. 1019 at 1:43–55. Xu accomplishes this by: “a method, system and computer program product for detecting interval change in images. In the method according to the invention, first and second three-dimensional images of a subject are obtained. The first and second images are typically current and previous images of a subject. The first and second images are matched. The first image is non-linearly warped to produce a warped image and the warped image is subtracted from the second image. The subtraction can produce and/or enhance interval changes in the first and second images.” *Id*. at 2:33–44. Further, Xu teaches that the “system according to the invention may also be implemented in software run on a computer. Software code devices maybe written to carry out the various operations on the images.” *Id*. at 10:35–40.

263. Additionally, International Publication WO 98/36683 ("Milestone") (Ex. 1020), titled "Non-invasive Radiographic Method for Analyzation of a Body Element," teaches a noninvasive process for analyzing internal structures of a patient:

> The process involves scanning a patient to acquire data representing a portion of the patient's internal structure. The scanned data is processed into three-dimensional volumetric and functional renderings. Baseline data representing three-dimensional volumetric data for either a normal internal structure or a previous scan of the patient's internal structure is also used in the process. The selected portions of the scanned and baseline data are preferably compared to determine whether an abnormality exists in the patient.

Ex. 1020, Abstract.

264. Milestone teaches that the "processor compares the converted data to baseline data." *Id*. at 6:1-3; *see also* 13:5–12 ("If the processor determines that an abnormality exists, it then displays the location of the abnormality and, preferably, the size of both the baseline object and the scanned object. The processor can also visually display the abnormal structure (e.g., cross-section) if desired. It is also possible to overlay the scanned image and the baseline image on the display. The differences can be highlighted (such as by coloring or shading). Conventional

software exists which permits such manipulation of computer data. The following examples further define and illustrate some of the capabilities of the present invention."); 3:14–22 ("The processor compares the cross-sectional properties of the scanned bronchus and bronchioles (by order) to the cross-section of the baseline bronchus and bronchioles. If the processor determines that the cross-section of the scanned bronchi is sufficiently different than the baseline cross-section as indicated by the baseline data, the processor displays the location of the abnormality and its size.").

265. I further understand Osseo, in a Delaware District Court hearing, stated that a POSA would—as of the priority date of the '374 patent—be familiar with and have access to comparison software for use with CT systems:

19 THE COURT: Is he saying a person of skill in
20 the art would know where to go purchase comparing software?
21 MR. OSTROW: That is, could be one way. It's
22 not saying here.
23 THE COURT: The argument is the patent itself
24 doesn't tell you how to compare. Are you saying that's
25 true, it just says, but there is software out there that
1 knows how to do it and that is adequate?
2 MR. OSTROW: I'm meaning to say one of ordinary
3 skill in the art, at the time of this invention, would know
4 how to do that, so it meets the standard, yes.
5 THE COURT: Even if the way they know how to do
6 that is to purchase software that is not disclosed in the
7 patent.
8 MR. OSTROW: Yes. Again, that is not the only
9 way but that is a way.
10 THE COURT: What other way does your expert say
11 is the way a person of skill in the art would know how to do
12 it?
13 MR. OSTROW: What he is saying is that one of
14 skill in the art would know how to compare two sets of data
15 in a computer.
16 THE COURT: When he talks about how they would
17 know how to do that, other than by software?
18 MR. OSTROW: This is the basis for his opinion.
19 There may be additional testimony in his deposition which I
20 am just not thinking of off the top of my head, but this is
21 at least found in his report.

Ex. 1012 at 17:19–18:21. I agree that a POSA would have, as of December 1, 1999, known how to algorithmically perform CT-image to CT-image comparisons required by the '374 patent, how to write comparison code to execute such

algorithms, and/or been aware of commercially available comparison software for CT systems.

266. A POSA reading Arai would have recognized that Arai discloses the necessary hardware to support the operation of existing comparison software and, in the alternative, discloses hardware that can be programmed to perform comparisons. Arai teaches memory for storing CT tomographic model data, including "external storing means 246," "frame memory 240," and "memory for arithmetic 241." Ex. 1013 at 17:42–43; 18:11–12. Arai additionally teaches that its microprocessor, "image signal processing means 236," is programmed with an algorithm, "arithmetic process" for generating tomographic images. *Id*. at 17:44–48. A POSA would have had a reasonable expectation of success in adapting Arai's microprocessor to perform comparisons between the images stored in Arai's memory devices. A POSA could use commercially available comparison software (which Osseo admits was well-known) with Arai's CT system or program the microprocessor of Arai using commercially available software systems (which the patent admits were commercially available) to perform comparisons. *See* Ex. 1001 at 4:10–13 ("The controller 4 can be programmed in any suitable manner utilizing any of a variety of commercially available programming languages and software development systems.").

267. Moreover, as evident from Milestone and Xu, such comparison software was often used in CT imaging systems for medical purposes (Xu to detect interval changes and Milestone to detect abnormalities in internal structures). *See* § X.E–F. Thus a POSA would have been motivated to adapt the microprocessor in Arai to perform a comparison function because the comparison of a patient model to a standard or to a previous model from the same patient is a common technique used by medical professionals to diagnose and treat patients. *See* § V.I. Using a microprocessor to perform comparisons, as stated in Xu or Milestone, is advantageous as the processor may catch small differences that healthcare providers themselves cannot.

7. Claims 6 and 12

268. Claims 6 and 12, which depend from claims 1 and 7 respectively, further recite "said controller is adapted for storing a first tomographic model and a second tomographic model; said first tomographic model is a preexisting patient model; said second tomographic model is a current patient model; and said controller is adapted to compare said first tomographic model with said second tomographic model."

269. It is my opinion that Arai renders claims 6 and 12 obvious (in combination with Cann, as discussed with respect to claim 1) and in further combination with Xu and/or Milestone, which disclose these limitations.

270. Claims 6 and 12 are substantially identical to claims 5 and 11. The only difference is that the comparison in claims 6 and 12 is between a patient's pre-existing model (*i.e.*, a previous scan) and the patient's current model. My analysis for claims 5 and 11 applies equally here. *See* § XI.A.6.

8. Claims 13 and 21

271. Claim 13 is an independent claim and recites: "A tomographic modeling system comprising:

> a controller with a microprocessor and a memory device connected to the microprocessor, said controller being adapted for creating, storing, and comparing 3D digital tomographic models of an object without the use of fiducial markers of said object;
>
> an input device connected to the microprocessor;
>
> a positioning motor connected to the microprocessor and responsive to commands from said microprocessor;
>
> X-ray equipment including an X-ray source, a detector array, and a restricted beam device;
>
> a convertor for converting a signal from said detector array, said convertor being connected to said detector array and to said microprocessor; and

an output device connected to said microprocessor and adapted for receiving a tomographic model from said microprocessor."

272. Claim 21 is an independent claim and recites: "A system for tomographically modeling a dental structure, which system comprises:

a controller with a microprocessor and a memory device connected to the microprocessor, said controller being adapted for creating, storing, and comparing 3D digital tomographic models of an object without the use of fiducial markers of said object;

an input device connected to the microprocessor;

a positioning motor connected to the microprocessor and responsive to commands from said microprocessor;

X-ray equipment including an X-ray source, a detector array, and a restricted beam device;

a convertor for converting a signal from said detector array, said convertor being connected to said detector array and to said microprocessor; and

an output device connected to said microprocessor and adapted for receiving a tomographic model from said microprocessor."

273. In my opinion, Arai renders claims 13 and 21 obvious, in combination with Cann, and in further combination with Xu and/or Milestone. I address the POSA's motivation to combine and reasonable expectation of success in combining Arai with Cann above in connection with claim 1. *See* § XI.A.1.a. And I address the POSA's motivation to combine and reasonable expectation of success in combining Arai with Xu and Milestone in view of the state of the prior art in connection with claims 5 and 11. *See* §§ XI.A.6–7. I incorporate that analysis here by reference.

274. Claims 13 and 21 are substantially similar to each other and to independent claim 1. The only difference between claims 13 and 21 is the preamble. Claim 21's preamble recites a "dental structure" whereas claim 13 does not. I understand that there may be a legal dispute as to whether preambles to claims 13 and 21 are limiting. I do not offer an opinion on the legal question of whether they are, or are not, limiting. To the extent they are limiting, my analysis for the preamble of claim 1 applies to both the preambles of claims 13 and 21. *See* § XI.A.1.a.

275. Claims 13 and 21 are similar to claim 1. Therefore, my analysis for claim 1 applies here. There are three differences between claims 13 and 21 and claim 1, as claims 13 and 21 recite: (1) a controller being adapted for creating,

storing, and comparing (2) 3D digital tomographic models of an object, (3) without the use of fiducial markers of said object.

276. With respect to the "controller being adapted for creating, storing and comparing" limitation, I addressed how Arai teaches the creating and storing of tomographic models in connection with claim 1. *See* § XI.A.1.a. I addressed the "comparing" limitation in connection with my analysis of claims 5, 6, 11, and 12. *See* §§ XI.A.6–7.

277. With respect to the "3D digital tomographic models" limitation, I addressed how Arai teaches the generation of "3D digital tomographic models" in connection with my analysis of claims 3 and 9. *See* § XI.A.4.

278. And with respect to the "without the use of fiducial markers," limitation, the CT system in Arai does not use a fiducial marker. Fiducial markers are X-ray attenuating objects placed on or within the structure to be imaged to serve as a reference point. Fiducial markers, as previously discussed, can help to align individual slices in a 3D tomographic model to improve the accuracy of the resulting model. But fiducial markers are not necessary for the creation, storage, or comparison of tomographic models with CT systems. With CT analysis techniques advancing throughout the 1990s, a POSA would understand the need for fiducial markers decreased and was often unnecessary for obtaining accurate comparisons. I note that the specification of Arai, like the specification of the '374

patent, does not discuss the use of fiducial markers. In contrast, a later Arai patent, U.S. Patent No. 6,243,439, which is a patent on a related CT system by two of the same inventors (Arai and Suzuki), explicitly discloses the use of a "position marker" or "fiducial marker" to improve accuracy of the CT measurements. Ex. 1027 at 2:5–10, 2:29–32 ("From the position of the image of the position marker in the obtained two-dimensional X-ray image, it is possible to calculate error data regarding the image pickup system in each X-ray."). This demonstrates that, absent such a discussion affirmatively teaching the use of fiducial markers, a POSA would understand that the CT system in Arai does not use fiducial markers. A POSA would be motivated not to use fiducial markers in imaging systems such as that in Arai because the use of these markers add complexity and cost to the imaging protocol and may not be needed in terms of the accuracy of the resulting model.

9. Claims 17 and 23

279. Claims 17 and 23, which depend from claims 13 and 21 respectively, recite a system "wherein said X-ray source emits an X-ray beam comprising a cone configuration."

280. It is my opinion that Arai discloses this limitation. My opinions regarding claims 13 and 21 are incorporated by reference. Accordingly, Arai renders claims 17 and 23 obvious (in combination with Cann, and in further

combination with Xu and/or Milestone, as discussed above with respect to claims 13 and 21). I address the POSA's motivation to combine and reasonable expectation of success in combining Arai with Cann above in connection with claim 1. *See* § XI.A.1.a. And I address the POSA's motivation to combine and reasonable expectation of success in combining Arai with Xu and Milestone in view of the state of the prior art in connection with claims 5 and 11. *See* §§ XI.A.6–7. I incorporate that analysis here by reference.

281. I addressed how Arai teaches a CT system that uses an X-ray beam comprising a cone beam in my analysis on claim 7. *See* § XI.A.2.

10. Claims 14, 18, 22, and 24

282. Claims 14, 18, 22 and 24, which depend from claims 11, 13, 21, and 23 respectively, further recite "wherein said restricted beam device comprises a dual-energy level restricted beam device."

283. In my opinion, Arai renders claims 14, 18, 22, and 24 obvious in combination with Cann (and in further combination with Xu and/or Milestone, as discussed above with respect to claims 13 and 21). I address the POSA's motivation to combine and reasonable expectation of success in combining Arai with Cann above in connection with claim 1. *See* § XI.A.1.a. And I address the POSA's motivation to combine and reasonable expectation of success in combining Arai with Xu and Milestone in view of the state of the prior art in

connection with claims 5 and 11. *See* §§ XI.A.6–7. I incorporate that analysis here by reference.

284. I addressed how Cann discloses the use of CT system with a dual-energy level restricted beam device and why it would have been obvious for a POSA to combine this feature of Cann with the CT system in Arai in my analysis for claims 2 and 8. *See* §§ XI.A.1.a and 3

11. Claims 15 and 19

285. Claims 15 and 19, which depends from claims 13 and 17 respectively, further recite "wherein said controller is adapted to compare a pre-existing tomographic model with a current tomographic model."

286. In my opinion, Arai renders claims 15 and 19 obvious (in combination with Cann, and in further combination with Xu and/or Milestone, as discussed above with respect to claim 13). I address the POSA's motivation to combine and reasonable expectation of success in combining Arai with Cann above in connection with claim 1. *See* § XI.A.1.a. And I address the POSA's motivation to combine and reasonable expectation of success in combining Arai with Xu and Milestone in view of the state of the prior art in connection with claims 5 and 11. *See* §§ XI.A.6–7. I incorporate that analysis here by reference.

287. I addressed how Arai, in view of the state of the prior art, and Arai in view of Milestone and/or Xu teaches a CT system with a controller that performs

comparisons between preexisting tomographic models and current tomographic models in my analysis for claims 5, 6, 11, and 12. *See* §§ XI.A.6–7.

12. Claims 16 and 20

288. Claims 16 and 20, which depend from claims 13 and 17 respectively, recite a system "wherein said x-ray source travels along a single axis; and said x-ray source simultaneously rotates around said single axis."

289. It is my opinion that Arai renders claims 16 and 20 obvious (in combination with Cann, as discussed above with respect to claim 13) and in further combination with Pelc '080, which discloses this limitation. I address the POSA's motivation to combine and reasonable expectation of success in combining Arai with Cann above in connection with claim 1. *See* § XI.A.1.a. I incorporate that analysis here by reference.

290. I addressed how it would have been obvious to a POSA to program the X-ray equipment in Arai to perform this scanning function in my analysis of claims 4 and 10. *See* § XI.A.5. I incorporate that analysis here by reference.

B. Anticipation by and Obviousness over Pelc

1. Claim 1

291. It is my opinion that Pelc discloses each and every limitation of claim 1 and thus anticipates claim 1. It is further my opinion that Pelc renders claim 1 obvious in combination with Rothman or in combination with Cann and Rothman.

a. "A system for tomographically modeling a dental structure, the system comprising:"

292. I understand that there may be a legal dispute as to whether the preamble is limiting. I do not offer an opinion on the legal question of whether it is, or is not, limiting. To the extent it is limiting, however, the POSA would understand that Pelc in combination with Rothman or in combination with Cann and Rothman teaches a system for tomographic densitometry modeling of a dental structure.

293. At the outset, the Pelc system is a computed tomography system. Pelc teaches "[a]n X-ray imaging system" that "provides both scanning radiography and computed tomography . . . ." Ex. 1015, Abstract. As Pelc describes his invention, it "relates generally to radiographic instruments and more particularly to a versatile instrument for either radiographic scanning or tomographic scanning of a patient for evaluation of bone density and bone morphology."

294. I explain above in the Background that CT systems inherently provide quantitative information regarding density. *See* § V.D. Consistent with that attribute of CT systems, the Pelc system teaches tomographic densitometry modeling. Pelc refers to "tomographic scanning of a patient for evaluation of bone density and bone morphology," which the POSA would understand as using CT to generate a quantitative densitometric model of the desired structure. Because CT systems assign a numerical value to each voxel within the image, and because that

numerical value is correlated to the density of the object, CT inherently provides quantitative densitometry information.

295. Alternatively, even if—contrary to my opinions—the POSA would not have viewed this system as inherently quantitative, it would have been obvious to the POSA to combine Pelc's disclosure of a CT system with Cann's disclosure of quantitative densitometry. Both references relate to CT modeling. Cann teaches quantitative densitometry, as explained above. *See* § X.B. Moreover, Pelc discloses that the invention relates to "tomographic scanning of a patient for evaluation of bone density." Ex. 1015 at 1:16. As explained above, *see* Sections V.E, V.G, V.H, and X.B, it was well understood before the priority date that the techniques disclosed by Cann—including dual-energy scanning and the use of a calibration phantom—would improve the accuracy of a CT scan and support the precise measurement of bone mineral content. A POSA would want a system that is capable of delivering accurate and precise measurements of bone density, as disclosed in Cann. A POSA would thus be motivated to use Cann's improvements in connection with the system of Pelc. Finally, the features of Pelc are suited to performing quantitative densitometry. Cann discloses a CT system similar in many respects to that Pelc but with the addition of a phantom to more precisely calculate bone mineral density. Accordingly, a POSA would have had a reasonable expectation of success in using CT system in Pelc to obtain the

quantitative density measurements described in Cann by December 1, 1999 because any modification of the CT system, including using a phantom, would be minimal, i.e., inclusion of a phantom in the scan to correlate the CT numbers to a known value. For the same reasons, incorporation of the quantitative CT system taught by Cann would not impact any of the combinations discussed below.

296. The CT imaging system discussed in Pelc is not limited to dental imaging. Nevertheless, it would have been obvious to apply the teaching of Pelc in the context of dental imaging. Prior to the priority dates of the ’374, ’301, and ’262 patents, computerized tomography was already “one of the most frequently used imaging modalities for the preoperative evaluation of the jaw for dental implants.” Ex. 1016 (Rothman) at 1. Rothman further teaches “quantitative assessment of mineral content” in the mandible using CT imaging technology. As Rothman recognizes, a POSA would have understood that CT was frequently used in dental application. And because Rothman teaches that “[m]ost commercially available CT scanners” can be used for dental scanning, *id.* at 10–11, a POSA would have been motivated to apply techniques disclosed in Rothman (which are focused on dental imaging) to the device disclosed by Pelc, and would have had a reasonable expectation of success in doing so. Indeed, Rothman explains in detail how a POSA might use a CT device – similar to the one disclosed in Pelc – to produce a tomographic model of a dental structure.

b. "a controller with a microprocessor and a memory device connected to the microprocessor, said controller being adapted for storing computed tomographic models of a dental structure"

297. Pelc discloses an "electronic computer" that "controls the C-arm, the radiation source, and the detector." Ex. 1015 at 5:31–33. Pelc teaches that this may be a "general purpose computer." *Id.* at 35:17–21. A computer necessarily includes one or more microprocessors. And as depicted in Figure 19, the computer described by Pelc includes a memory device (labeled "mass storage 57"); *see also id.* at 36:1–3 ("A mass storage device 57 provides a means for storing operating programs for the CT imaging system, as well as image data for future reference by the user.")

298. A POSA would understand from this disclosure that the computer disclosed by Pelc is "adapted for storing" the models ("image data") generated by the system, as required by the claim.

c. "an input device connected to the microprocessor"

299. Pelc discloses an input device connected to the keyboard, referring to "a computer 56 having a display terminal 58 and a keyboard 60 such as are well known in the art." This is consistent with Pelc's disclosure of a controller that is a general-purpose computer. The input device of Pelc is shown graphically in Figure 1, excerpted below:

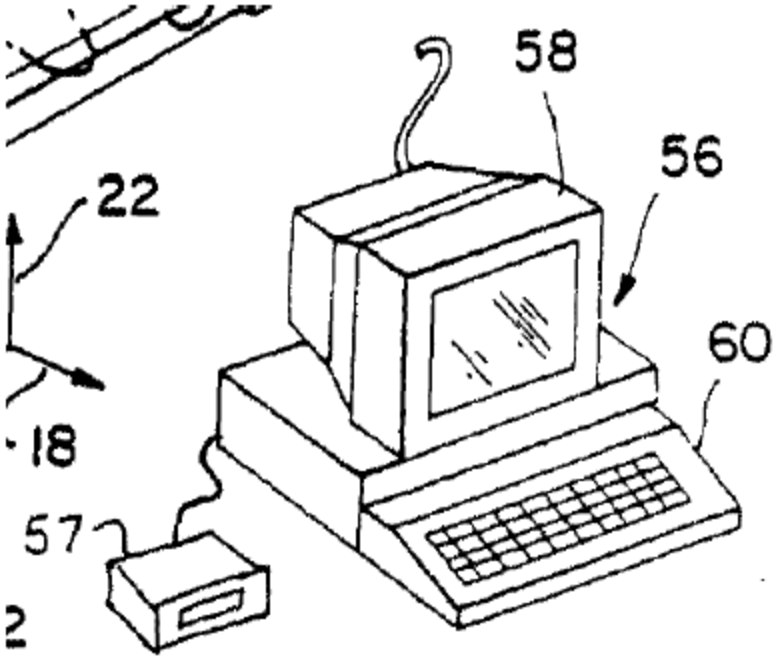

300. Pelc further explains that "the computer 56 . . . receives commands and scanning parameters via operator console 58 which is generally a CRT and keyboard which allows the user to enter parameters for the scan and to display reconstructed image and other information from the computer 56." *Id.* at 35:31–36; *see also* Fig. 19 (showing link between operator console 60 and computer 56).

d. "a positioning motor connected to the microprocessor and responsive to commands from the microprocessor"

301. The device taught by Pelc includes a positioning motor connected to, and responsive to commands from, the microprocessor described above. The device includes an actuator driven by a stepper motor "so that it may operate under the control of computer 56 . . . ." *Id.* at 18:7-14; *see also id.* at 35:9–13 ("The control system of a CT imaging system suitable for use with the present invention

has gantry motor controller 242 which controls the rotational speed and position of the C-arm 40 and provides information to computer 56 regarding gantry position."); *id.* at 35:28–31 ("The speed and position of table 12 . . . is communicated to and controlled by computer 56 by means of table motor controller 250.").

e. X-ray equipment including an X-ray source, a detector array, and a restricted beam device;

302. Pelc teaches "a radiation source and a detector" that are "affixed to the ends of the C-arm to provide energy attenuation measurements along an axis between those ends at the plurality of angles, such measurements being received by an electronic computer." *Id*. at 5:27–31.

303. With respect to the X-ray source, Pelc discloses a "radiation source 44, which includes an x-ray tube together with filter and collimator," which is "mounted at one end of the C-arm 40 via a support beam 46 and is oriented to direct a polychromatic X-ray fan beam 48 along beam axis 49 generally toward isocenter 42 to a linear detector array 50 . . . ." *Id.* at 14:24–29.

304. The detector is described in greater detail at 16:23–36:

> The linear detector array 50 may be a scintillation type detector, as is understood in the art, having scintillation materials which convert x-rays to visible light to be detected by photodetectors which produce a corresponding electrical signal.

Such a detector array was typical of CT devices at the time and would have been familiar to a POSA. (Note that, although the discussion above appears in a section of Pelc relating to the densitometer, the same detector array is discussed in the context of tomographic scanning. *See, e.g.*, *id.* at 17:31.

305. A POSA would understand that the "collimator" described above is a form of restricted beam device. *See also id.* at 22:10–14 ("The slot collimator 68 incorporates a slot 71 defining the width and thickness of the fan beam 48 and which allows a passage of only a portion of a cone beam 70 generated by an anode 72 of an x-ray tube of the radiation source 44."). The restricted beam device is shown in Figure 8:

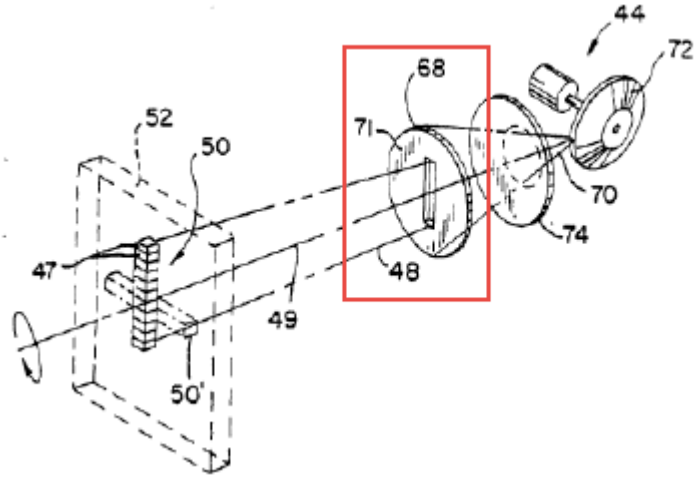

FIG. 8

306. Moreover, it was well-known as of the priority date that CT devices used restricted beams. *See* Ex. 1025 (21 C.F.R. § 1020.31, April 1998) at 566. This was necessary to prevent exposing patients to unnecessary radiation.

f. A convertor for converting a signal from said detector array, said convertor being connected to said detector array and to said microprocessor; and

307. Pelc teaches a converter connected to the detector and to the microprocessor. Pelc discloses:

> The detector elements receiving the transmitted radiation produce electrical signals which may be **converted to digital values by an analog to digital converter** for the later development of an image or for other processing by computer equipment. The ability to quantify the measurement of the transmitted radiation, implicit in the digitization by the analog to digital converter, allows not only the formation of a radiographic 'attenuation' image but also the mathematical analysis of the composition of the attenuating material by dual energy techniques.

Ex. 1015 at 2:1–5 (emphasis added); *see also id.* at 33:34–34:16; Fig. 19. Although this disclosure appears under the "scanning radiography" section of the Background of the Invention, a POSA would understand that this same equipment is used in both the radiography and CT modes of the Pelc system.

308. It would have been well understood by the POSA as of the priority date (and long before) that a CT device—which is digital—must include a means of converting the analog signals generated by the detector array into digital

information that can be processed by the computer. The analog-to-digital converter described above by Pelc would serve that function.

g. An output device connected to said microprocessor and adapted for receiving a tomographic model from said microprocessor"

309. Pelc discloses an output device. Pelc describes "a CRT display . . . to display the reconstructed image and other information . . . ." *Id*. at 35:31–36. This display is "adapted for receiving a tomographic model" from the computer. Pelc explains that "reconstructed slice images" generated by the computer "may be displayed on a conventional CRT tube or may be converted to a film record by means of a computer controlled camera." *Id.*at 4:17–20; *see also* Fig. 19 (referring to an "operator console" 60 connected to the computer); Fig. 1 (depicting the operator console 60 with a display).

2. Claim 7

310. Claim 7 of the '374 patent recites the system of claim 1, "wherein said X-ray source emits an X-ray beam comprising a cone configuration."

311. It is my opinion that Pelc discloses this limitation and thus anticipates claim 7. It is further my opinion that Pelc renders claim 7 obvious (in combination with Rothman or in combination with Cann and Rothman, as discussed above with respect to claim 1). I address the POSA's motivation to combine and reasonable

expectation of success in combining these references above in connection with claim 1. *See* § XI.B.1.a. I incorporate that analysis here by reference.

312. I have been informed that the term "comprising," as it is used in patents, is inclusive or open-ended, and does not exclude additional, unrecited elements. Pelc discloses an X-ray source that emits an X-ray beam comprising a cone configuration. Ex. 1015 at 22:10–14 (referring to "cone beam 70 generated by an anode 72 of an x-ray tube of the radiation source 44"). The cone geometry of the beam is shown graphically in Figure 8:

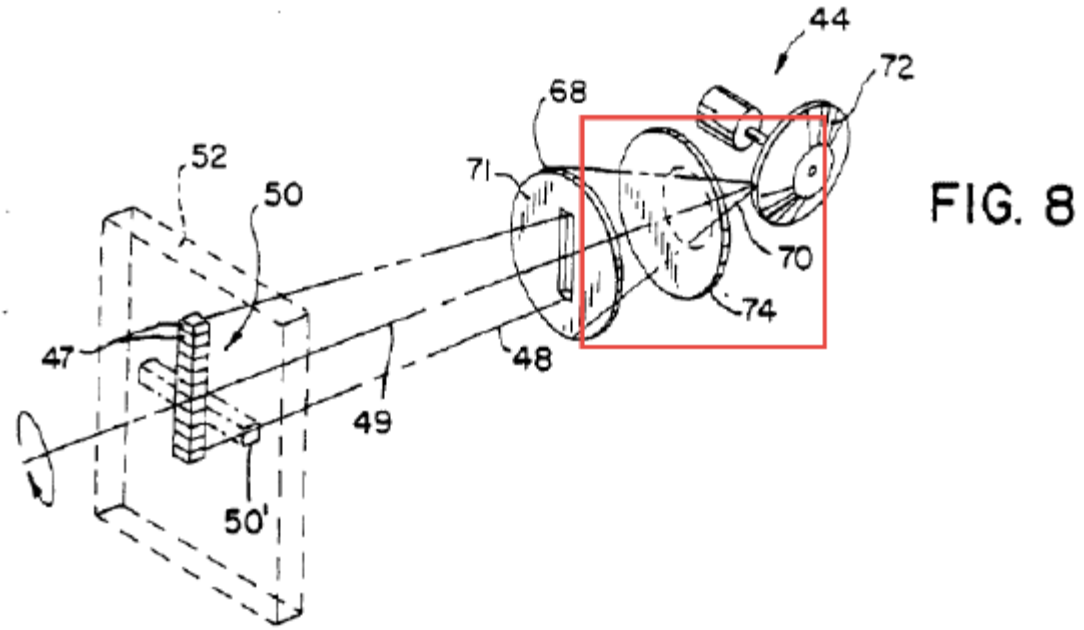

313. A POSA would understand from this disclosure that the X-ray source of the Pelc system "emits an X-ray beam comprising a cone configuration", which is then collimated to form a fan beam.

314. To the extent that Osseo contends that Pelc does not expressly disclose a cone beam, it would have been obvious to a POSA to adapt the Pelc system for use with a cone beam. As I explain above in the Background, cone-beam CT systems had long been known and used as of the priority date. *See* § V.D. The '374 patent acknowledges that use of a cone beam was known in the prior art:

> Examples of X-ray equipment adaptable for use with the present invention are disclosed in U.S. Pat. No. 5,533,080; No. 5,838,765; and No. Re. 36,162, which are incorporated herein by reference. The X-ray equipment 12 includes an X-ray beam source 14 and a detector array 16. The X-ray beam can be suitably collimated to assume any suitable configuration, such as fan, pencil, cone, etc."

See Ex. 1001 at 4:27–33 (incorporating by reference No. Re. 36,162 ("Bisek") (Ex. 1026), which discloses both fan and cone beams). There were numerous examples in the prior art of using a cone beam for CT imaging, including of dental structures. *Id.*; *see also* Ex. 1021 (Bushberg) at 272–73; Ex. 1026 (Bisek); Ex. 1035 (Mozzo). A POSA would have understood that cone beam offers a variety of benefits. For example, using a cone beam may expose the patient to a lower radiation dose and may generate a 3D dataset with only a single rotation of the X-ray equipment around the patient. *See* § V.D. A POSA would accordingly have been motivated to use a cone beam to take advantage of these benefits. A POSA would have had a

reasonable expectation of success in using a cone beam in connection with the Pelc system given the well-established use of cone beams in CT, including in systems such as that of Pelc.

3. Claims 2 and 8

315. Claims 2 and 8 recite: "wherein said restricted beam device comprises a dual-energy level restricted beam device."

316. It is my opinion that Pelc discloses this limitation and thus anticipates claims 2 and 8. It is further my opinion that Pelc renders claims 2 and 8 obvious (in combination with Rothman or in combination with Cann and Rothman, as discussed above with respect to claim 1). I address the POSA's motivation to combine and reasonable expectation of success in combining these references above in connection with claim 1. *See* § XI.B.1.a. I incorporate that analysis here by reference.

317. Pelc discloses the use of a dual-energy level restricted beam device. Pelc explains that dual-energy systems are favorable because they "quantitatively compare the attenuation radiation at two energies to distinguish, for example, between bone and soft tissue" and "allow the measure of bone mass." Ex. 1015 at 2:14–17. Pelc further explains that the system "may produce separate attenuation measurements indicating attenuation at two energy levels." *Id.* at 6:25–29. As I explained above, and as a POSA would understand, such dual-energy techniques

take advantage of the fact that materials exhibit unique attenuation patterns at different energy levels, such that using dual-energy scanning provides greater precision and the ability to gain information regarding a scanned material's composition. Pelc includes an extensive discussion of dual energy scanning. *See id.* at 33–41.

4. Claims 3 and 9

318. Claims 3 and 9 recite: "wherein said tomographic model received by said output device is a 3D tomographic model." Pelc discloses such a 3D tomographic model.

319. It is my opinion that Pelc discloses this limitation and thus Pelc anticipates claims 3 and 9. It is further my opinion that Pelc renders claims 3 and 9 obvious (in combination with Rothman or in combination with Cann and Rothman, as discussed above with respect to claim 1). I address the POSA's motivation to combine and reasonable expectation of success in combining these references above in connection with claim 1. *See* § XI.B.1.a. I incorporate that analysis here by reference.

320. I understand that Osseo has admitted that "it was known at the time, fairly well known by those of ordinary skill in the art how to make 3D models out of image datasets." Ex. 1012 (SJ Hearing Transcript) at 21:21–22:4. This is consistent with my understanding, and the understanding of the POSA, that such

technology had long been known as of the priority date. *See, e.g.*, Ex. 1016 (Rothman) at 7; *see* § X.D (discussing Rothman).

321. Even if Osseo had not acknowledged that using CT to generate a 3D tomographic model was not inventive as of the priority date, Pelc discloses the required 3D model. In particular, Pelc refers to "images obtained at any two gantry angles having sufficient separation to provide the necessary third dimensions of information." *Id.* at 25:35–26:3. Pelc's system, when used as described (*e.g.*, with the gantry translating while simultaneously rotating), will acquire multiple slices of information, comprising a three-dimensional digital model. Further, it would have been obvious to a POSA to use the system in Pelc system to create three-dimensional models as such a use of Pelc's CT system was well known and within the skill of a POSA as of the priority date of the '374 patent. Rothman, for instance, teaches in detail how it is possible to generate three dimensional images from a CT dataset. *See* § X.D; Ex. 1016 at 7 ("Moreover, with CT it is possible to generate three-dimensional images from the same data set. These images may be useful in conceptualizing complex anatomic relationships in unusual cases.").

5. Claims 4 and 10

322. Claims 4 and 10 recite: "wherein: said x-ray source travels along a single axis; and said x-ray source simultaneously rotates around said single axis."

323. It is my opinion that Pelc discloses this limitation and thus anticipates claims 4 and 10. It is further my opinion that Pelc renders claims 4 and 10 obvious (in combination with Rothman or in combination with Cann and Rothman, as discussed above with respect to claim 1). I address the POSA's motivation to combine and reasonable expectation of success in combining these references above in connection with claim 1. *See* § XI.B.1.a. I incorporate that analysis here by reference.

324. As explained above, the Pelc system—consistent with standard CT systems—includes a C-arm capable of rotating around the patient (and in this instance around a table supporting the patient in either a supine or seated position). The C-arm holds the X-ray source and detector. "The fan beam and detector array may be mounted to the c-arm so that the fan beam and the detector array may rotate about a fan beam axis connection the radiation source and the detector array." Ex. 1015 at 7:9–12; *see also id.* at 21:18–35 (describing the "rotation of the detector and fan beam"). This is depicted graphically in Figure 6:

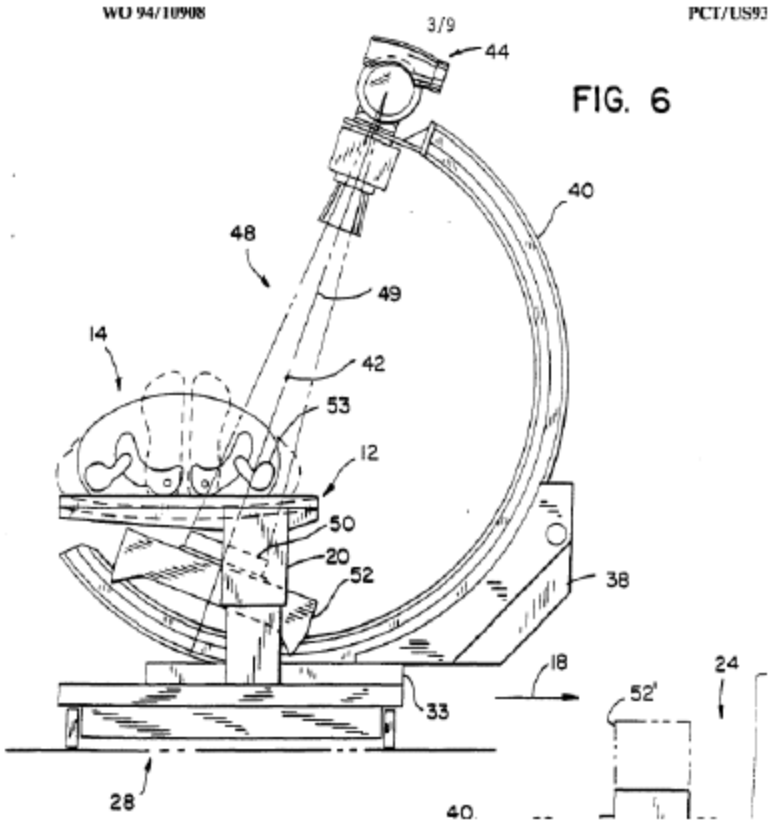

325. The C-arm is supported by gantry sitting on a movable pallet that can be moved on rails. "[L]ongitudinal rails . . . allow the gantry pallet . . . to be positioned longitudinally." *Id.* at 13:34–14:2; *see also* Figs. 1, 6, 9, 15, 18, and 19.

326. Consistent with standard CT systems at the time, Pelc teaches that the rotation of the C-arm can occur simultaneously with the movement of the pallet. "Together, motion of the pallet 34 and slider 36 permit a scanning by the detector 50 and radiation source 44 of the densitometer 10 . . . ." *Id.* at 4:32–34.

327. These aspects of the Pelc system are depicted graphically in Figure 15 (showing rotation of the x-ray source around the longitudinal axis of the table):

FIG. 15

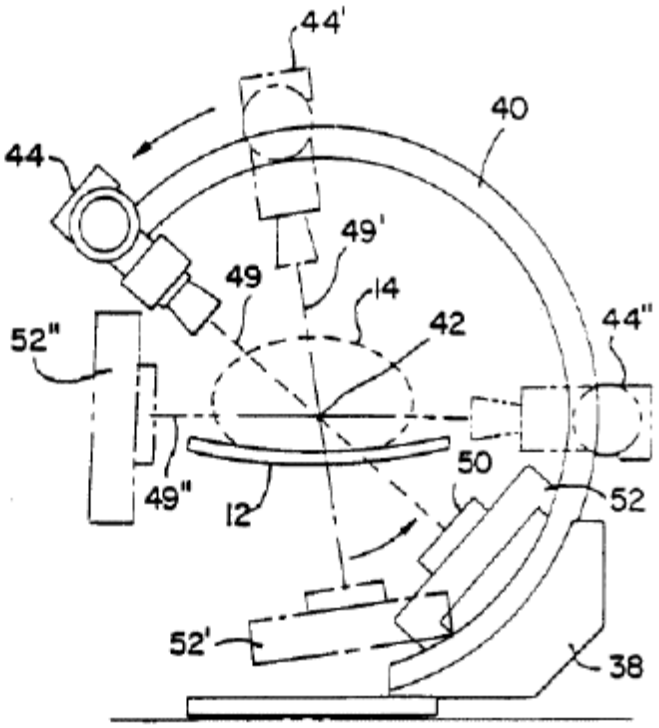

328. Figure 1 further depicts the C-arm gantry mounted on the pallet, which is in turn mounted on rails that allow for simultaneous movement of the x-ray source along the longitudinal axis of the table.

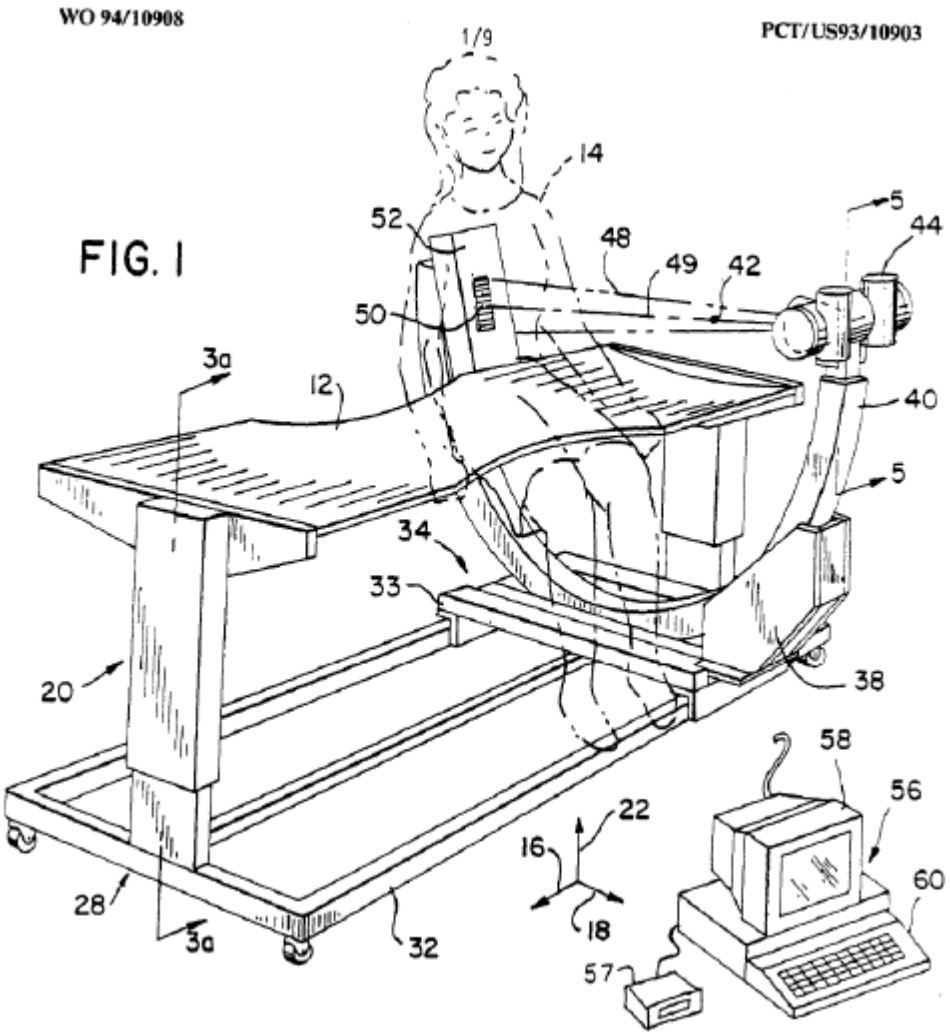

329. These aspects of the Pelc system are typical of CT systems as of the priority date and would have been familiar to the POSA.

6. Claims 5 and 11

330. Claims 5 and 11, which depends from claims 1 and 7 respectively, further recite “said controller is adapted for storing a first tomographic model and a second tomographic model; said first tomographic model is a preexisting, commercially available standard model; said second tomographic model is a

current patient model; and said controller is adapted to compare said first tomographic model with said second tomographic model."

331. It is my opinion that Pelc renders claims 5 and 11 obvious (in combination with Rothman or in combination with Cann and Rothman, as discussed above with respect to claim 1) and in further combination with Xu and/or Milestone, which disclose these limitations.

332. As explained above, the '374 patent acknowledges that means for comparing tomographic models were known in the prior art, and Osseo has admitted that a POSA would have known how to compare two sets of data using commercially available software that existed before the priority date. Ex. 1012 (SJ Hearing Transcript) at 17:23–18:15. A POSA would have understood that the Pelc system, which includes a controller which includes an operator console having a microprocessor with memory, an input, and a display, included all of the hardware necessary to support the operation of existing comparison software and, in the alternative, discloses hardware that can be programmed to perform comparisons. A POSA would have had a reasonable expectation of success in adapting Pelc's system to perform comparisons between the models stored in Pelc's memory device, particularly given the '374 patent's disclosure that its controller "can be programmed in any suitable manner utilizing any of a variety of commercially available programming languages and software development systems." *See* Ex.

1001 at 4:10–13. Moreover, as evident from Milestone and Xu, discussed above in Sections X.E and X.F, respectively, such comparison software was often used in CT imaging systems for medical purposes (Xu to detect interval changes and Milestone to detect abnormalities in internal structures). Thus, a POSA would have been motivated to adapt the microprocessor in Pelc to perform such comparison functions because the comparison of a patient model to a standard or previous model from the same patient is a common technique used by medical professionals to diagnose and treat patients. *See* § V.I. Accordingly, it is my opinion that claims 5 and 11 are obvious.

7. Claims 6 and 12

333. Claims 6 and 12 are similar to claims 5 and 11, except that claims 6 and 12 require comparison against a patient's pre-existing model rather than against a commercially available model. As noted above, such comparisons were known in the prior art. My analysis as to claims 5 and 11 is equally applicable to claims 6 and 12. It is, therefore, my opinion that Pelc renders claims 6 and 12 obvious (in combination with Rothman or in combination with Cann and Rothman, as discussed above with respect to claim 1) and in further combination with Xu and/or Milestone, which disclose these limitations. *See* § XI.B.6.

8. Claims 13 and 21

334. As I note above, claims 13 and 21 are similar to each other and to claim 1. In my opinion, Pelc renders claims 13 and 21 obvious, in combination with Rothman or with Cann and Rothman, and in further combination with Xu and/or Milestone. I address motivation to combine and reasonable expectation of success with respect to these references in Sections XI.B.1.a and XI.B.6.

335. With respect to claim 13 and claim 21, the only difference is that the preamble of claim 21 recites a "dental structure," whereas the preamble of claim 13 does not. I understand that there may be a legal dispute as to whether the preamble is limiting. I do not offer an opinion on the legal question of whether it is, or is not, limiting. To the extent it is limiting, Pelc discloses this limitation. I refer to my analysis of the preamble to claim 1 above, which applies equally here. *See* § XI.B.1.a.

336. Claims 13 and 21 differ from claim 1 in that they recite a controller "being adapted for creating, storing, and comparing 3D digital tomographic models of an object without the use of fiducial markers of said object." I address these limitations below.

a. Creating, storing, and comparing 3D digital tomographic models

337. I address the creation of tomographic models above in connection with my discussion of the preamble to claim 1. *See* § XI.B.1.a. I address the

storage of tomographic models in connection with my discussion of the "adapted for storing" limitation of claim 1. *See* § XI.B.1.b. I address the 3D aspect of this limitation in connection with my discussion of claims 3 and 9. *See* § XI.B.4 Finally, I address the comparison of tomographic models in connection with my discussion of claims 5, 6, 11, and 12. *See* §§ XI.B.6–7. That analysis applies equally here.

b. 3D digital tomographic models

338. As I explain in connection with my discussion of claims 3 and 9 above, *see* Section XI.B.4, a POSA would understand that the controller disclosed in Pelc is adapted to create 3D digital tomographic models, and if not that it would nevertheless be obvious to adapt it to do so. Osseo has admitted that "it was known at the time, fairly well known by those of ordinary skill in the art how to make 3D models out of image datasets." Ex. 1012 (SJ Hearing Transcript) at 21:21–22:4. This is consistent with my understanding, and the understanding of the POSA, that such technology had long been known as of the priority date. *See, e.g.*, Ex. 1016 (Rothman) at 7; *see above* § X.D (discussing Rothman). Even if Osseo had not acknowledged that using CT to generate a 3D tomographic model was not inventive as of the priority date, Pelc discloses the required 3D model. In particular, Pelc refers to "images obtained at any two gantry angles having sufficient separation to provide the necessary third dimensions of information."

Ex. 1015 at 25:35–26:3. Pelc's system, when used as described (*e.g.*, with the gantry translating while simultaneously rotating), will acquire multiple slices of information, comprising a three-dimensional digital model.

c. Without the use of fiducial markers

339. As explained above, fiducial markers are X-ray attenuating objects placed on or within the structure to be imaged to serve as a reference point. Pelc, like the '374 patent, does not discuss the use of fiducial markers. Accordingly, a POSA would understand that the CT system disclosed in Pelc does not need to use fiducial markers. A POSA would further recognize that fiducial markers are not required in order for the system of Pelc to create, store, and compare 3D digital tomographic models, thus it would be obvious to use the CT system in Pelc without fiducial markers. Fiducial markers themselves add another component and layer of complexity to the imaging protocols that is not necessary for many medical imaging purposes.

9. Claims 17 and 23

340. Claims 17 and 23 recite: "wherein said X-ray source emits an X-ray beam comprising a cone configuration." As I explain above in connection with claim 7, Pelc discloses an X-ray source emitting an X-ray beam comprising a cone configuration. *See* § XI.B.2. My opinions regarding claims 13 and 21 are incorporated by reference. It is, therefore, my opinion that Pelc renders claims 17

and 23 obvious (in combination with Rothman or in combination with Cann and Rothman, and in further combination with Xu and/or Milestone, as discussed above with respect to claims 13 and 21).

10. Claims 14, 18, 22, and 24

341. Claims 14, 18, 22, and 24 are dependent claims that recite an additional element: "wherein said restricted beam device comprises a dual-energy level restricted beam device." As discussed above in connection with my analysis of claims 2 and 8, Pelc discloses that the "restricted beam device comprises a dual-energy level restricted beam device." *See* § XI.B.3. My opinions regarding claims 13, 17, 21, and 23 are incorporated by reference. It is therefore my opinion that Pelc renders claims 14, 18, 22, and 24 obvious (in combination with Rothman or in combination with Cann and Rothman, and in further combination with Xu and/or Milestone, as discussed above with respect to claims 13 and 21). I address motivation to combine and reasonable expectation of success with respect to these references in Sections XI.B.1.a and XI.B.6.

11. Claims 15 and 19

342. Claims 15 and 19 recite: "wherein said controller is adapted to compare a pre-existing tomographic model with a current tomographic model." Consistent with my analysis of claims 5, 6, 11, and 12, *see* Sections XI.B.6–7, it is my opinion that Pelc renders claims 15 and 19 obvious (in combination with

Rothman or in combination with Cann and Rothman, and in further combination with Xu and/or Milestone, as discussed above with respect to claim 13). I address motivation to combine and reasonable expectation of success with respect to these references in Sections XI.B.1.a and XI.B.6.

12. Claims 16 and 20

343. Claims 16 and 20 recite the system wherein "said x-ray source travels along a single axis and said x-ray source simultaneously rotates around said single axis." I address this limitation above in connection with my analysis of claims 4 and 10, which applies equally here. *See* § XI.B.B.5. My opinions regarding claims 13 and 17 are incorporated by reference. It is my opinion that Pelc renders claims 16 and 20 obvious (in combination with Rothman or in combination with Cann and Rothman, and in further combination with Xu and/or Milestone, as discussed above with respect to claim 13). I address motivation to combine and reasonable expectation of success with respect to these references in Sections XI.B.1.a and XI.B.6.

XII. DETAILED OPINIONS REGARDING INVALIDITY GROUNDS OF THE '301 PATENT

A. Arai

1. Independent Claim 1

344. Independent claim 1 reads: A system for tomographically modeling dental and orthopedic structure densitometry, which includes:

a) A controller with a microprocessor and a memory device connected to the microprocessor, said controller including means for storing a pre-existing tomographical dental/orthopedic densitometry model;

b) an input device connected to the microprocessor;

c) a positioning motor connected to the microprocessor and movable in response to from said microprocessor;

d) X-ray equipment including an X-ray source and a detector array, and a restricted beam device;

e) conversion means for converting a signal from said detector array, said conversion means being connected to said detector array and to said microprocessor; and

f) an output device connected to said microprocessor and adapted for receiving a tomographical densitometry model from said microprocessor.

345. It is my opinion that Arai discloses each and every limitation of claim 1 and thus anticipates claim 1. It is further my opinion that Arai renders claim 1 obvious in combination with Cann.

a. Preamble

346. Claim 1 of the ’301 patent recites: “A system for tomographically modeling dental and orthopedic structure densitometry, which includes . . . .”

347. I understand that there may be a legal dispute as to whether the preamble is limiting. I do not offer an opinion on the legal question of whether it is, or is not, limiting. To the extent it is limiting, Arai discloses this limitation.

348. A system that tomographically models dental structure densitometry or orthopedic structure densitometry meets the requirements of the claim preamble. As I explain above with respect to the ’374 patent, a POSA would understand that Arai in view of Cann teaches a system for tomographically modeling dental structure densitometry. *See* § XI.A.1.a. That analysis applies equally to claim 1 of the ’301 patent, and I incorporate it here by reference.

b. Controller

349. Claim 1 of the ’301 patent recites “a controller with a microprocessor and a memory device connected to the microprocessor.” As I explain above, *see* Section XI.A.1.b, Arai teaches this aspect of the claimed system. I incorporate that analysis here by reference.

c. Storing tomographic models of dental structure

350. Claim 1 further recites: “said controller including means for storing a pre-existing tomographical dental/orthopedic densitometry model.” I have been informed that this limitation is known as a “means-plus-function” limitation, and

as a result requires a particular structure. The Court held that the structure required by this element is a computer memory. *See* Ex. 1010 (Markman Memorandum) at 12.

351. Arai discloses a computer memory as part of its controller(s). Arai teaches that "signal processing means 236" stores CT models of dental structure in the "memory for arithmetic 241," which is a component of the "image signal processing means 236." Ex. 1013 at 17:42–44 (emphasis added). Arai also describes "external storing means 246," which can be a hard disk or magnetooptical disk, which is similarly connected to the controller. *Id.* at 18:11–15. These features are depicted in Figure 9 of Arai.

d. Input device

352. Claim 1 recites "an input device connected to the microprocessor." As I explained above, *see* Section XI.A.1.c, Arai teaches an input device. *See also* Ex. 1013 at 14:51–56; Figs. 7-9.

e. Positioning motor

353. Claim 1 recites " a positioning motor connected to the microprocessor and movable in response to [signals] from said microprocessor." As I explained above, *see* Section XI.A.1.d, Arai teaches a positioning motor connected to the microprocessor. *See* Ex. 1013 at 3:23–34; 15:62–16:6; Fig. 7.

f. X-ray equipment

354. Claim 1 recites: "X-ray equipment including an X-ray source and a detector array." The Arai system includes "X-ray source 28" and "image sensor 38." *Id*. at 2:15–18; Fig. 2. A POSA would understand that an image sensor is a detector array.

g. Conversion means

355. Claim 1 recites "conversion means for converting a signal from said detector array, said conversion means being connected to said detector array and to said microprocessor." I have been informed that this limitation is known as a "means-plus-function" limitation, and as a result requires a particular structure. I understand that the Delaware Court held that the corresponding structure required by this limitation is an analog-to-digital convertor. Ex. 1010 (Markman Memorandum) at 10. As explained above, *see* Section XI.A.1.f, Arai teaches an analog-to-digital converter. *See* Ex. 1013 at 17:38–42, Fig. 9.

h. Output device

356. Claim 1 recites "an output device connected to said microprocessor and adapted for receiving a tomographical model from said microprocessor." The '301 patent describes an "output device" as follows: "Without limitation on the generality of output devices 26, it can comprise a monitor, a display, a printer, a communications link, and/or another computer." Ex. 1002 at 4:39–43.

357. As explained above, *see* Section XI.A.1.g, Arai teaches two output devices adapted for receiving a tomographic densitometry model from the microprocessor: "external storing means 246" and "displaying means 248." Ex. 1013 at 18:3–15.

2. Claim 2

358. Claim 2 of the '301 patent recites the system of claim 1 wherein "said positioning motor is adapted for positioning said X-ray equipment with respect to three axes of movement."

359. It is my opinion that Arai discloses this limitation and thus anticipates claim 2. It is further my opinion that Arai renders claim 2 obvious (in combination with Cann, as discussed above with respect to claim 1). I address the POSA's motivation to combine and reasonable expectation of success in combining Arai with Cann above in connection with claim 1 of the '374 patent. *See* § XI.A.1.a. That analysis applies equally here, and I incorporate it here by reference.

360. Arai teaches "X-axis control motor 42," "Y-axis control motor 44," and "rotation control motor 46" for positioning the imaging equipment. Ex. 1013 at 3:23–34, 11:2–27 15:62–16:1; Fig. 2. Accordingly, the positioning motor of Arai is adapted for positioning the X-ray equipment along three axes of movement (*i.e.*, X-axis, Y-axis, and rotation).

3. Claim 3

361. Dependent claim 3 further recites a system of claim 1 "wherein said conversion means comprises an analog-to-digital converter connected to said detector array."

362. It is my opinion that Arai discloses this limitation and thus anticipates claim 3. It is further my opinion that Arai renders claim 3 obvious (in combination with Cann, as discussed above with respect to claim 1). I address the POSA's motivation to combine and reasonable expectation of success in combining Arai with Cann above in connection with claim 1. *See* § XI.A.1.a. That analysis applies equally here, and I incorporate it here by reference.

363. As explained above with respect to the '374 patent, *see* Section XI.A.1.f, Arai teaches the required analog-to-digital converter: "The image signal supplied from the image sensor 38 to the image signal processing means 236 is converted into a digital signal by A/D converting means 238 . . . ." Ex. 1013 at 17:29–42. This aspect of the Arai system is also depicted in Figure 9 of Arai, reproduced below (annotated in yellow to identify analog-to-digital converter):

FIG. 9

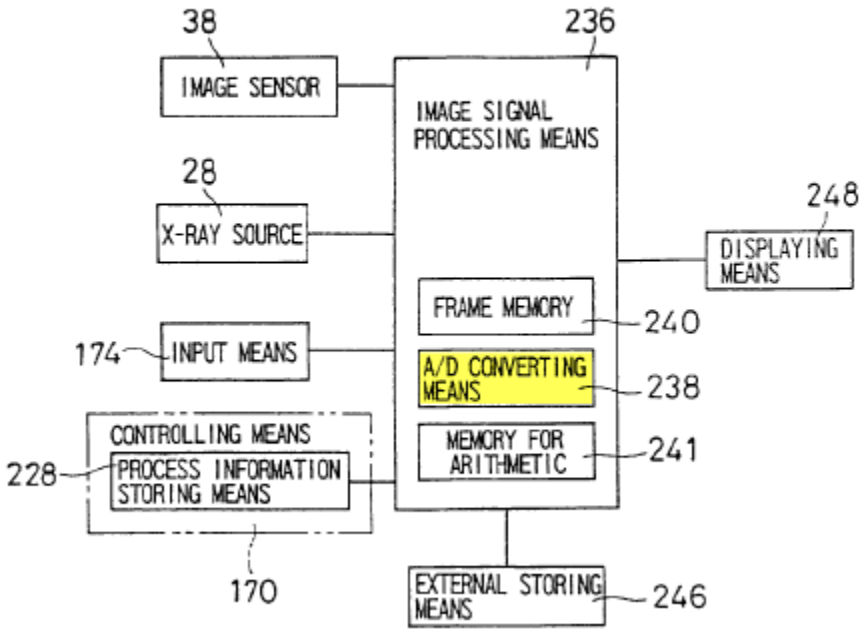

4. Claim 4

364. Claim 4 depends from claim 3 and recites the system of claim 3 "wherein said conversion means includes a merger device connected to said analog-to-digital converter and to said microprocessor."

365. It is my opinion that Arai discloses this limitation and thus anticipates claim 4. It is further my opinion that Arai renders claim 4 obvious (in combination with Cann, as discussed above with respect to claim 1). I address the POSA's motivation to combine and reasonable expectation of success in combining Arai with Cann above in connection with claim 1 of the '374 patent. *See* § XI.A.1.a. That analysis applies equally here, and I incorporate it here by reference.

366. The ’301 patent describes the concept of a “merger device” as follows:

> Analog signals from the detector array 16 are output to an analog-to-digital (A/D convertor 20, from which digitized signals are transmitted to a merger device 22 for merging into formats suitable for processing and analyzing by the microprocessor 6. The microprocessor 6, using data from the merger device 22, creates a tomographical densitometry model 24 which is transmitted to an output device or devices 26.

Ex. 1002 at 4:32–36. As I note above in Section VI.A.8, it is my understanding that the term “merger device” has been construed to mean “a device that merges digitized signals into a data output suitable for processing and analyzing by a microprocessor.”

367. Arai discloses a “merger device” as described by the ’301 patent:

> The image signal processing means 236 in the embodiment comprises A/D converting means 238 for converting an analog signal into a digital signal, a frame memory 240 which stores image information, and a memory for arithmetic 241. The image signal supplied from the image sensor 38 to the image signal processing means 236 is converted into a digital signal by the A/D converting means 238, and digital-converted image information is stored in the frame memory 240. Plural sets

> of image information stored in the frame memory 240 are stored in the image memory for arithmetic 241. A predetermined arithmetic process corresponding to the selected imaging mode is conducted on image information read out from the image memory for arithmetic 241, thereby generating a tomographic image of the selected mode.

Ex. 1013 at 17:33–48. Thus, a POSA would understand the "image processing means 236," which can be configured by a microprocessor, to be a merger device because it is programmed to receive, store, and perform calculations on data generated from multiple scans to generate a tomographic image.

368. Further, a POSA would understand that the aspect of CT devices that the '301 patent terms a "merger device" is inherent in any CT device. The very nature of CT is that the device must gather data from multiple scans and then "merge" that data to generate the resulting voxel values and, ultimately, the tomographic model. This was well understood before the priority date of the '301 patent. For example, Bushberg discloses that "[i]n a CT scanner, the computer orchestrates the acquisition of a large number of transmission measurements taken through the object being scanned and stored this raw data. The raw data, after some preliminary algebra, are reconstructed to produce the tomographic images." Ex. 1021 (Bushberg) at 244.

5. Claim 5

369. Claim 5 of the ’301 patent depends from claim 1 and further recites “wherein said X-ray equipment comprises a dual energy level, restricted beam device.”

370. It is my opinion that Arai renders claim 5 obvious (in combination with Cann, as discussed above with respect to claim 1). I address the POSA’s motivation to combine and reasonable expectation of success in combining Arai with Cann above in connection with claim 1 of the ’374 patent. *See* §§ XI.A.1.a and XI.A.3. That analysis applies equally here, and I incorporate it here by reference.

371. As an initial matter, the ’301 patent itself acknowledges that dual-energy scanning was known. It cites a patent to Bisek, U.S. Patent No. RE36,162 and notes that “as discussed therein, dual-energy densitometry can result in a more accurate patient model.” Ex. 1002 at 5:12–15.

372. I discuss the merits of dual-energy scanning above in Section V.E. Based on this knowledge in the art, and as admitted in the ’301 patent, a POSA would have been motivated to modify the system disclosed in Arai to take advantage of the greater accuracy afforded by dual-energy scanning. Moreover, Cann, as discussed above, discloses dual-energy CT and discusses its benefits. Ex. 1014 at 493–94. As discussed above, a POSA would have been motivated to

combine Arai and Cann to incorporate dual-energy imaging into the system disclosed in Arai. *See* § XI.A.3 (discussed in the context of the ’374 patent).

373. Arai further teaches that the X-ray equipment in its system includes a restricted beam device, as recited in claim 5 of the ’301 patent. As Arai explains, “[t]he primary slit means 30 restricts the width and height of X-rays emitted from the X-ray source 28, thereby preventing unnecessary X-rays from being emitted toward the object.” Ex. 1013 at 4:45–63. As explained above, this was a standard requirement for CT devices at the time and remains so today.

6. Claim 6

374. Claim 6 depends from claim 1 and further recites “a preprogrammed scan path for said X-ray equipment, said scan path being programmed into said microprocessor.”

375. It is my opinion that Arai discloses this limitation and thus anticipates claim 6. It is my further opinion that Arai renders claim 6 obvious (in combination with Cann, as discussed above with respect to claim 1). I address the POSA’s motivation to combine and reasonable expectation of success in combining Arai with Cann above in connection with claim 1 of the ’374 patent. *See* § XI.A.1.a. That analysis applies equally here, and I incorporate it here by reference.

376. Arai discloses that a preprogrammed scan path is programmed into its "process information storing means 228," which is a part of "controlling means 170." Ex. 1013 at 16:44–54; Figs. 7 and 9. As Arai explains:

> The controlling means 170 controls operations of various components such as the motors on the basis of the CT process information. That is, during the partial CT imaging process, the movement controlling means 173 of the operation controlling means 172 controls the operation of the rotation control motor 46 on the basis of the CT process information so that the X-ray source 28 and the image sensor 38 are moved along a CT image formation locus.

Id. This was a standard and necessary aspect of CT systems as of the priority date of the '301 patent. As Bushberg explains, "[i]n a CT scanner, the computer orchestrates the acquisition of a large number of transmission measurements taken through the object being scanned and stores this raw data." Ex. 1021 (Bushberg) at 244.

7. Claim 7

377. Claim 7 depends from claim 1 and further recites "wherein said output device include a color monitor adapted to receive said tomographical densitometry model output color-coded to represent densitometry."

378. It is my opinion that Arai renders claim 7 obvious (in combination with Cann, as discussed above with respect to claim 1). I address the POSA's motivation to combine and reasonable expectation of success in combining Arai with Cann above in connection with claim 1 of the '374 patent. *See* § XI.A.1.a. That analysis applies equally here, and I incorporate it here by reference.

379. The '301 patent acknowledges that use of color-coding to represent bone mineral density was known in the art, stating in the Background of the Invention that "BMD images use color to identify varying densities." Ex. 1002 at 2:12.

380. Arai discloses "displaying means 248 which may be realized by, for example, a display device, and the tomographic image signal is displayed on the displaying means 248 as tomographic image information," which receives the tomographic model from the microprocessor associated with the "image signal processing means 236." Ex. 1013 at 18:3–8.

381. A POSA as of the priority date of the '301 patent, would expect that the displaying means disclosed in Arai would be a color monitor (such as a CRT monitor). Alternatively, a POSA would understand that use of a color monitor to display color-coded results would be obvious in light of the state of the art in 1999, or at least obvious to try, given that the only options are grayscale and color. *See, e.g.*, Ex. 1016 (Rothman) at 43, 121–22, 131 (providing examples of color-coded

CT models); Ex. 1031 (Hosie) 32 (discussing a color monitor display and a printer for reproducing the result displayed on the color monitor). The ’301 patent itself discloses that the use of color images to provide densitometry information was known in the prior art as previously mentioned, and color monitors were ubiquitous as of the December 1999 priority date of the, thus a POSA would have had a reasonable expectation of success in using a color monitor with Arai’s CT system to disclose color-coded densitometry models. The POSA would have been motivated to do so as a color-coded densitometry model may be an easier visual representation of the patient structure for the medical professional to analyze.

8. Claim 8

382. Claim 8 depends from claim 1 and recites “[t]he system according to claim 1 wherein said output device includes a color printer adapted to print images color-coded to correspond to the densitometry of said model.”

383. It is my opinion that Arai renders claim 8 obvious (in combination with Cann, as discussed above with respect to claim 1). I address the POSA’s motivation to combine and reasonable expectation of success in combining Arai with Cann above in connection with claim 1 of the ’374 patent. *See* § XI.A.1.a. That analysis applies equally here, and I incorporate it here by reference.

384. As noted above with respect to claim 7, color-coding representation of densitometry information was known, as the ’301 patent admits. Like color

monitors, color printers were commonly in use as of the 1999 priority date of the ’301 patent. It would have been obvious to a POSA to use a color printer to print color-coded representations of the densitometry of the models generated by Arai’s CT device.

9. Claim 10

385. Independent claim 10 of the ’301 patent is directed to a method of tomographically modeling dental and orthopedic densitometry using system components that generally overlap with those recited in claim 1. It is my opinion that Arai renders claim 10 obvious (in combination with Cann, as discussed above with respect to claim 1). I address the POSA’s motivation to combine and reasonable expectation of success in combining Arai with Cann above in connection with claim 1 of the ’374 patent. *See* § XII.A.1.a. That analysis applies equally here, and I incorporate it here by reference.

a. Preamble

386. The preamble to claim 10 of the ’301 patent recites: “A method of tomographically modeling dental and orthopedic densitometry, which includes the steps of . . . .”

387. I understand that there may be a legal dispute as to whether the preamble to claim 10 is limiting. I do not offer an opinion on the legal question of whether it is, or is not, limiting.

388. To the extent it is limiting, Arai or Arai in view of Cann, teach a system and method for tomographically modeling dental structure densitometry, for the same reasons discussed above in connection with claim 1 of the ’301 patent. *See* §§ XII.A.1, XI.A.1.a (discussing the motivation to combine Arai and Cann in the context of the ’374 patent). As I explain in greater detail below, each of the structural elements recited in claim 10 are disclosed by or obvious over Arai, and Arai in view of Cann, and the claimed steps are consistent with the manner in which a POSA would expect the Arai system to be used for the purposes disclosed in the reference.

b. Common structural elements with claim 1

389. Claim 10 refers to the following steps calling for certain equipment:

> (a) “providing a controller with a microprocessor and a memory device connected to said microprocessor”;
> (b) “providing an input device connected to said microprocessor”; (e) “providing X-ray equipment with an X-ray source and an X-ray detector; and
> (j) “providing an output device connected to said microprocessor.”

The components to be “provid[ed]” in these steps are equivalent to the corresponding system components recited in claim 1 of the ’301. *See* §§ XII.A.1.b (controller), XII.A.1.d (input device), XII.A.1.f (X-ray equipment), XII.A.1.h (output device). I incorporate my analysis of those claim elements here by reference.

c. Inputting and storing a patient densitometry model

390. Steps (c) and (d) of claim 10 recite, respectively, "inputting patient diagnostic parameters with said input device," and "storing said diagnostic parameters in memory."

391. Arai discloses inputting patient diagnostic parameters. For example, Arai discloses inputting diagnostic parameters such as tooth position and storing that information in computer memory. *See* Ex. 1013 at 15:16–33. Arai also discloses storing the patient diagnostics. As discussed for claim 18 below (Section XII.A.17), a POSA would be motivated to use Arai's CT system to perform comparisons of a patient's current scan with a preexisting scan. In order to perform this comparison, the prior model would need to be input and stored in the microprocessor of Arai. Arai teaches "image processing means 236," which comprises of "frame memory 240" and "memory for arithmetic 241," as well as "external storing means 246" for storing patient diagnostic parameters. Ex. 1013 at 17:42–44; 18:11–12.

d. Use of the X-ray equipment

392. Steps 10(f)–(g), respectively, recite "(f) positioning said X-ray equipment and a patient's dental/orthopedic structure between said source and said detector array"; and "emitting an X-ray beam from said source through said dental structure and to said detector array." A POSA would recognize that this is the

expected use of the X-ray equipment disclosed in Arai (and the expected use of CT equipment generally). Arai discloses the placement of the patient between the X-ray source and detector in, for example, Figure 2, reproduced below with yellow highlighting to reflect the relevant aspect of the figure:

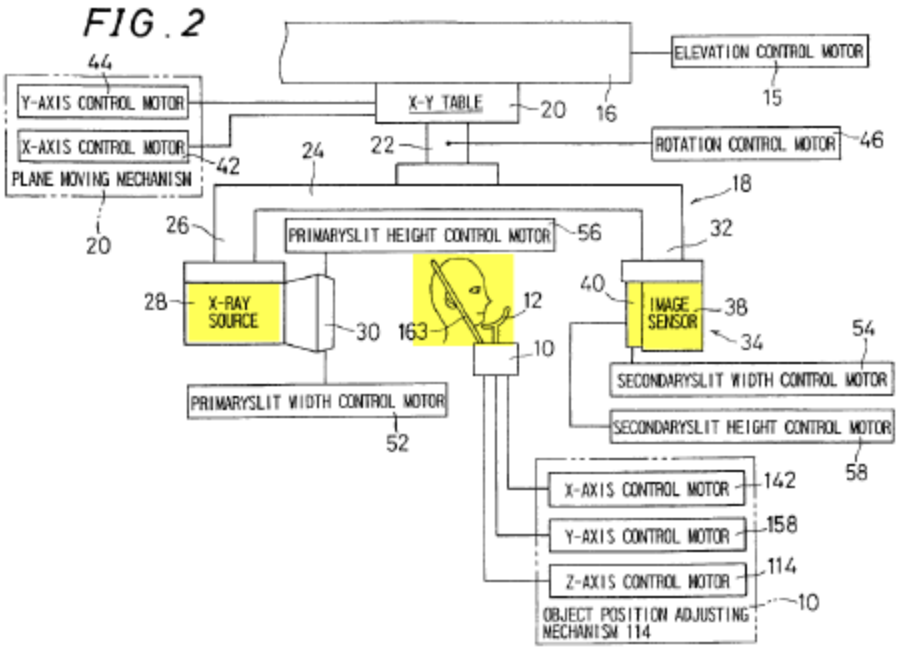

e. Forming and outputting a densitometrical model

393. Step 10(i) recites "forming with said microprocessor a tomographical densitometry model of said dental/orthopedic structure." Step 10(k) recites "outputting said densitometry model to said output device." A POSA would understand that the purpose and intended use of the Arai system is to generate such models and output them to a display or other output media. Arai discloses:

> Plural sets of image information stored in the frame memory 240 are stored in the image memory for

> arithmetic 241. A predetermined arithmetic process corresponding to the selecting imaging mode is conducted on image information read out from the image memory for arithmetic 241, thereby generating a tomographic image of the selected mode.

Ex. 1013 at 17:42–48.

10. Claim 11

394. Claim 11 depends from claim 10 and recites "the additional steps of emitting, detecting, digitizing, and storing signals corresponding to first and second energy levels from said energy source."

395. It is my opinion that Arai renders claim 11 obvious in combination with Cann. I address the POSA's motivation to combine and reasonable expectation of success in combining Arai with Cann above in connection with claims 1 (quantitative densitometry) and 2 (dual-energy CT) of the '374 patent. *See* §§ XI.A.1.a, XI.A.3. That analysis applies equally here, and I incorporate that analysis here by reference.

396. Each of the recited steps—emitting, detecting, digitizing, and storing signals—are standard (and indeed required) in the process of performing a CT scan, including a CT scan using the system disclosed in Arai. And as discussed above in connection with my analysis of claim 1 of the '301 patent, Arai discloses all of the equipment necessary to carry out these steps. *See* § XII.A.1.

397. Similarly, as discussed above in connection with my analysis of claim 5, it would have been obvious to modify the system of Arai (either based on the state of the art, as admitted in the patent, or in view of Cann) to use dual-energy scanning. Ex. 1014 at 493–94; Ex. 1037 (Lindh) at 146–48; § XII.A.5; *see also* § XI.A.3. (discussing the motivation to combine Arai and Cann in the context of the ’374 patent).

11. Claim 12

398. Claim 12 depends from claim 10 and recites the additional steps of “inputting to said controller a predetermined scan path for said X-ray equipment” and “traversing said X-ray equipment along said scan path.”

399. It is my opinion that Arai discloses these limitations. It is my opinion that Arai renders claim 12 obvious (in combination with Cann, as discussed above with respect to claim 10). I address the POSA’s motivation to combine and reasonable expectation of success in combining Arai with Cann above in connection with claim 1 of the ’374 patent. *See* § XI.A.1.a. That analysis applies equally here, and I incorporate it here by reference.

400. As discussed above in my analysis of claim 6, Arai discloses a predetermined scan path programmed into the controller. *See* § XII.A.6. For that predetermined scan path to have been programmed into the controller, it must

necessarily have been "input." And during the normal use of the Arai system, the X-ray equipment would follow the scan path.

12. Claim 13

401. Claim 13 depends from claim 12 (which in turn depends from claim 10) and recites the additional step of "providing a positioning motor connected to said microprocessor and to said X-ray equipment for moving same through three axes of movement along said scan path."

402. It is my opinion that Arai renders claim 13 obvious (in combination with Cann, as discussed above with respect to claim 10), and in further combination with Pelc '080, which discloses this limitation. I address the POSA's motivation to combine and reasonable expectation of success in combining Arai with Cann above in connection with claim 1 of the '374 patent. *See* § XI.A.1.a. That analysis applies equally here, and I incorporate that analysis here by reference.

403. As I explain above in connection with my analysis of claim 2, Section XII.A.2, the positioning motor in Arai's system positions the X-ray equipment along the X-, Y-, and Z-axes of movement along the scan path.

404. Alternatively, it would have been obvious to a POSA to modify the Arai system to use three axes of movement, for instance, by using the Arai apparatus in such a way as described in Pelc '080 for three axes of movement.

Doing so would allow a healthcare provider to use Arai to image a greater portion of the object—for example the entire head instead of just the jaw. Making this modification would have been well within the skill of a POSA, particularly since all the equipment to make this modification is already taught in Arai. The CT systems in Arai and Pelc ’080 share many similar features—radiation source and sensor, collimated beam, microprocessor, and reconstruction software—as was common to CT systems at the time. *See, e.g.*, § V.D. And a POSA would have been aware of software available at the time to process the information gathered from a scan conducted as described in Pelc ’080 (where the x-ray source travels along a single axis and simultaneously rotates around that axis) with the cone beam equipment described in Arai’s CT system. *See* Ex. 1036 (Noo) at 541–42 (describing the algorithm for reconstructing the data acquired from circle-plus-line orbits in cone beam CT); *see also* Ex. 1021 (Bushberg) at 260–62 (describing a helical CT).

13. Claim 14

405. Claim 14 depends from claim 1 and recites the step of “detecting incipient caries with said tomographical densitometry model.”

406. It is my opinion that Arai renders claim 14 obvious (in combination with Cann, as discussed above with respect to claim 10), and in further combination with Rothman. I address the POSA’s motivation to combine and

reasonable expectation of success in combining Arai with Cann above in connection with claim 1 of the ’374 patent. *See* § XII.A.1.a. That analysis applies equally here, and I incorporate that analysis here by reference.

407. The result of using Arai’s system in the manner envisioned by Arai is a tomographical densitometry model, as explained above. *See* §§ X.A, XII.A.1. Accordingly, one could determine from the resulting model a variety of information relating to the density of the patient’s teeth. A POSA would understand that incipient caries (i.e., cavities) would be detectable as differences in density in a tooth.

408. I have previously discussed why a POSA would be motivated to combine Arai and Cann. *See* § XI.A.1.a. A POSA would also have been motivated to combine Arai with Rothman. Both references cover the use of CT for dental diagnosis, and more specifically, provide examples where CT can be used in the dental implant context. Ex. 1013 at 1:9–46; Ex. 1016 (Rothman) at 113–22. It would have been obvious to a POSA, in view of Arai’s disclosure of dental diagnosis and the ability to scan particular teeth, to use Arai’s CT system for other dental diagnostic purposes, such as those disclosed in Rothman. Both systems effectively produce tomographic images of the teeth and jaw, thus a POSA would have been able to do so with a reasonable expectation of success.

14. Claim 15

409. Claim 15 depends from claim 10 and recited the additional step of "detecting dental fractures with said tomographical densitometry model."

410. It is my opinion that Arai renders claim 15 obvious (in combination with Cann, as discussed above with respect to claim 10) and in further combination with Rothman, which discloses this limitation. I explain in Section XII.A.13 why a POSA would have been motivated to combine these references and would have had a reasonable expectation of success in doing so.

411. The result of using Arai's system in the manner envisioned by Arai is a tomographical densitometry model, as explained above. *See* §§ X.A, XII.A.1. A POSA would understand that one could use such information to detect dental fractures.

412. Rothman, for example, discloses a "CT scan demonstrate[ing] a fracture through the distal [dental] implant." Ex. 1016 (Rothman) at 128. Rothman further discloses that while "[t]he development of a stress fracture is rare," "use of CT should be considered if the cause of persistent pain is not found on routine dental radiographs." *Id.*

15. Claim 16

413. Claim 16 depends from claim 10 and recites the additional step of "detecting apical abscesses with said tomographical densitometry model

414. It is my opinion that Arai renders claim 16 obvious (in combination with Cann, as discussed above with respect to claim 10) and in further combination with Rothman, which discloses this limitation. I explain in Section XII.A.13 why a POSA would have been motivated to combine these references and would have had a reasonable expectation of success in doing so.

415. The result of using Arai's system in the manner envisioned by Arai is a tomographical densitometry model, as explained above. *See* §§ X.A, XII.A.1. A POSA would understand that one could use such information to detect apical abscesses.

416. Rothman, for example, discloses using CT scanning to detect and assess "apical periodontal abscesses," and notes that CT offers benefits over conventional radiographs in this regard because "[t]he full extent of the cavity is difficult to assess on conventional radiographs." Ex. 1016 (Rothman) at 54.

16. Claim 17

417. Claim 17 depends from claim 10 and further recites "the additional step of analyzing the extent of osseointegration of a dental or orthopedic prostheses with respect to a patient's dental or orthopedic structure with said tomographical densitometry model."

418. It is my opinion that Arai renders claim 17 obvious in combination with Cann (as discussed above with respect to claim 10), and in further

combination with Rothman, which discloses this limitation. I explain in Section XII.A.13 why a POSA would have been motivated to combine these references and would have had a reasonable expectation of success in doing so.

419. The result of using Arai's system in the manner envisioned by Arai is a tomographical densitometry model, as explained above. *See* §§ X.A, XII.A.1. A POSA would understand that one could use such information to analyze osseointegration of a prosthesis.

420. Rothman provides a lengthy discussion of assessing osseointegration using dental CT. Ex. 1016 (Rothman) at 113–22. Rothman explains:

> The osseointegrated implant demonstrates intimate contact with the host bone (Fig 6-1c). The space between the implant fills in, except for the most superficial portion of the implant. Depending on implant design, several millimeters of the implant may not be osseointegrated at the mucosal border. A faint halo can be seen on those axial CT slices near the mucosal border. Determination of the presence of osseointegration should be made on the axial views, because they are the images with the highest resolution.

Id. at 114.

17. Claim 18

421. Claim 18 depends from claim 10 and recites the additional step of "comparing said patient's densitometry model to pre-existing densitometry model."

422. It is my opinion that Arai renders claim 18 obvious in combination with Cann (as discussed above with respect to claim 10), and in further combination with Xu and/or Milestone, which disclose this limitation. I discuss in detail above in Sections XI.A.1.a and XI.A.6 (with respect to the '374 patent) why a POSA would have been motivated to, and had a reasonable expectation of success, in combining these references. That analysis applies equally here, and I incorporate it here by reference.

423. As an initial matter, I note that the '301 patent admits that means for comparing tomographic models were known in the prior art. Ex. 1002 at 2:13–15. Moreover, I am informed that Osseo admitted in the Delaware Court proceedings that "one of skill in the art would know how to compare two sets of data in a computer," and that before the priority date there was commercially available software capable of producing the claimed comparisons. Ex. 1012 (SJ Hearing Transcript) at 17:23–18:15.

424. As I explain above, a POSA would understand that comparing patient data over time (including CT data) is a routine aspect of diagnosis and treatment.

See § V.I. Moreover, it was well known by the priority date that a microprocessor could be programmed with software to compare these comparisons, as I explain in greater detail above. *See* §§ X.E. and X.F (discussing Xu and Milestone).

425. Arai includes memory for storing CT data, including "image signal processing means 236," which includes "frame memory 240" and "memory for arithmetic 241," as well as "external storing means 246" as explained above. *See* § XIII.A.1.c. A POSA would have been motivated to modify the microprocessor of Arai to perform comparisons between a pre-existing model and a patient's current model with a reasonable expectation of success because Arai's microprocessor infrastructure already has the necessarily memory for storing CT data, a key aspect of performing a comparison. *See* § XI.A.6.

18. Claim 19

426. Claim 19 depends from claim 10 and recites the addition steps of "providing a color output device connected to said microprocessor" and "color coding said densitometry model in colors corresponding to the patient's or orthopedic structure density and outputting said densitometry model to said output device."

427. It is my opinion that Arai renders claim 19 obvious (in combination with Cann, as discussed above with respect to claim 10). I address the POSA's motivation to combine and reasonable expectation of success in combining Arai

with Cann above in connection with claim 1 of the ’374 patent. *See* § XI.A.1.a. I incorporate that analysis here by reference.

428. Arai discloses a monitor and a computer capable of performing these steps. The signal of the tomographic image . . . generated by signal processing means 236 is supplied to displaying means 248 which may be realized by, for example, a display device, and the tomographic image signal is displayed on the displaying means as tomographic image information.” Ex. 1013 at 18:3–8. As explained above, these were steps that were known and common with respect to medical and dental CT. *See* § XII.A.7.

19. Claim 20

429. Independent claim 20 of the ’301 patent recites: “A method of tomographically modeling dental and orthopedic densitometry, which includes the steps of:

a) providing a controller with a microprocessor and a memory device connected to said microprocessor;

b) providing an input device connected to said microprocessor;

c) inputting with said input device dental or orthopedic patient diagnostic parameters, including a pre-existing densitometry model;

d) storing said diagnostic parameters in said memory device;

e) providing X-ray equipment connected to said microprocessor, said equipment including an X-ray source and an X-ray detector array;

f) positioning said X-ray equipment and a patients' dental or orthopedic structure relative to each other with said patient's dental or orthopedic structure between said source and said detector array;

g) emitting an X-ray beam from said source at a first –ray beam energy level, passing same through said dental or orthopedic structure, and detecting same with said detector array;

h) outputting a signal corresponding to said detected X-ray beam from said detector array;

i) digitizing said detector array output signal;

j) storing said digitized output signal in said memory device;

k) storing said digitized output signal in said memory device;

l) merging said stored output signals to form a present tomographical densitometry model of said dental or orthopedic structure;

m) comparing said present densitometry model with said pre-existing densitometry model;

n) adjusting said present densitometry model to account for patient parameters including age and gender;

o) providing an output device connected to said microprocessor;

p) color coding said present tomographical densitometry model with colors corresponding to dental or orthopedic structure density; and

q) outputting said color-coded model to said output device."

430. It is my opinion that Arai renders claim 20 obvious in combination with Cann, and in further combination with Xu and/or Milestone. I discuss in detail in Sections XI.A.1.a and XI.A.6 why a POSA would have been motivated to, and had a reasonable expectation of success in, combining these references. That analysis applies equally here, and I incorporate it by reference.

431. Because claim 20 recites a method that combines the steps and expected use of the apparatus previously discussed, the following table provides a reference to where I have already addressed each of the claim elements of claim 20.

Claim 20	**Prior Reference in § XII.A**	**Prior Claim(s)**
Preamble	A.1.a, A.9.a	1, 10
(a) controller	A.1.b, A.9.b	1, 10
(b) input device	A.1.d, A.9.b	1, 10
(c) inputting parameters	A.9.c	10
(d) storing parameters	A.9.c	10
(e) X-ray equipment	A.l.f, A.9.b	1, 10
(f) positioning X-ray equipment	A.9.d	10
(g) emitting and detecting X-ray	A.9.d	10
(h) outputting signal	A.1.g, A.3, A.9.d	1, 3, 10
(i) digitizing signal	A.1.g, A.3, A.9.d	1, 3, 10
(j) storing digitized signal	A.1.c, A.9.e	1, 10

Claim 20	Prior Reference in § XII.A	Prior Claim(s)
(k) dual-energy	A.5, B.11	5, 11
(1) merging signals to create model	A.1.a, A.4, A.9.i	1, 4, 11
(m) comparing model to pre-existing model	A.17	18
(o) output device	A.1.h, A.9.b	1, 10
(p) color-coding model	A.7, A.8, A.18	7, 8, 19
(q) outputting color-coded model	A.7, A.8, A.18	7, 8, 19

432. The only step of independent claim 20 not previously addressed is step (n), which recites: "adjusting said present densitometry model to account for patient parameters including age and gender." The specification of the '301 patent states that "tomographical densitometry models can be corrected and/or adjusted to account for patients' age, gender, physical characteristics, etc." Ex. 1002 at 14:12-16.

433. It was well known as of the priority date of the '301 patent that densitometry models were corrected and/or adjusted to account for a patient's parameters, as with the case of osteoporosis. *See* Ex. 1032 (WHO 1994) at Fig. 1; *see also* § V.I. Thus, a POSA would have had a reasonable expectation of success in adapting the microprocessor of Arai's CT system— "image processing means 236"—to adjust any generated densitometry model to account for a patient's parameters because these adjustments were routinely made in medical imaging.

B. Pelc

1. Claim 1

434. It is my opinion that Pelc anticipates claim 1. It is further my opinion that Pelc renders claim 1 obvious in combination with Cann.

a. Preamble

435. The preamble to claim 1 of the ’301 patent recites “A system for tomographically modeling dental and orthopedic structure densitometry, which includes . . . .”

436. I understand that there may be a legal dispute as to whether the preamble of claim 1 of the ’301 patent is limiting. I do not offer an opinion on the legal question of whether it is, or is not, limiting. To the extent it is limiting, Pelc in combination with Cann teaches a system and method for tomographic densitometry modeling of dental structures, as I explain above in connection with the ’374 patent, *see* Section XI.B.1.a. I address motivation to combine and reasonable expectation of success with respect to these references in Section XI.B.1.a. That analysis applies equally here, and I incorporate it by reference.

437. As explained above, *see* Sections X.C–D, XI.B.1.a, Pelc teaches “[a]n X-ray imaging system” that “provides both scanning radiography and computed tomography . . . .” Ex. 1015, Abstract, 1:13–17. Moreover, Pelc teaches quantitative densitometric modeling, and refers to scanning a patient “for evaluation of bone density and bone morphology.” Thus, as with all digital CT systems, Pelc’s CT system provides quantitative information.

b. Controller

438. Claim 1 recites "a controller with a microprocessor and a memory device connected to the microprocessor." The specification of the '301 patent notes that "[t]he hardware components of the controller 4, i.e., the microprocessor 6 and the memory device 7, can comprise any number of suitable hardware devices which are commercially available and are suitable for this application. In addition to various programmable logic devices (PLDs) and special-purpose microprocessors, general purpose, commercially available personal computers can be utilized in the controller 4." Ex. 1002 at 3:62–4:2.

c. Storing Tomographic Models of Dental Structure

439. Claim 1 further recites that the controller includes "means for storing a pre-existing tomographical dental/orthopedic densitometry model." I have been informed that this limitation is known as a "means-plus-function" limitation, and as a result requires a particular structure. The Court held that the structure corresponding to this limitation is a computer memory. *See* Ex. 1010 (Markman Memorandum) at 12; *see* § VI.A.9. As I discuss above, Pelc discloses a controller with memory, and that is thus a controller capable of storing a pre-existing CT model. Pelc's system specifically includes "[a] mass storage device" connected to the computed that "provides **means for storing . . . image data** for future reference by the user." Ex. 1015 at 36:13 (emphasis added). A POSA would

understand that "image data" refers not only to the image itself, but also to the data underlying the image (such as CT numbers for each voxel), and thus comprises a tomographical densitometry model.

d. Input device

440. Claim 1 further recites "an input device connected to the microprocessor." Pelc discloses an input device connected to a microprocessor. Pelc discloses a "computer 56 having a display terminal 58 and a **keyboard** 60 such as are well known in the art." *Id*. at 16:8–10.

e. Positioning motor

441. Claim 1 further recites "a positioning motor connected to the microprocessor and movable in response to commands from said microprocessor."

442. Pelc discloses this component. Pelc's system "includes a track for moving a pallet with respect to a patient along a first and second perpendicular axis. A collar is attached to the pallet and holds a C-arm which may slide through the collar so that its ends rotate to one of a plurality of angles about the patient." Ex. 1015 at 5:34–27. The C-arm is positioned by "actuator 63," which is "driven by a **stepper motor** . . . under the control of computer 56 . . . ." *Id.* at 18:7–14 (emphasis added). Pelc further discloses that "[t]he speed and position of table 12 . . . is communicated to and controlled by computer 56 by means of table motor controller 250." *Id.* at 35:28–31.

443. Moreover, a POSA would understand that because CT requires acquisition of data from a plurality of angles and positions, CT systems necessarily include motors for positioning the X-ray equipment with respect to the patient (whether by moving the X-ray equipment or by moving the patient, or both).

f. X-ray equipment

444. Claim 1 further recites "X-ray equipment including an X-ray source and a detector array." Pelc discloses "a radiation source and a detector" that are "affixed to the ends of the C-arm to provide energy attenuation measurement . . . ." *Id*. at 5:27–31; *see also id.* at 16:23–36 (further describing X-ray source and detector).

g. Conversion means

445. Claim 1 further recites "conversion means for converting a signal from said detector array, said conversion means being connected to said detector array and to said microprocessor." I have been informed that this limitation is known as a "means-plus-function" limitation, and as a result requires a particular structure. The Court held that the structure corresponding to this limitation is "an analog-to-digital converter." *See* Ex. 1010 (Memorandum Memorandum) at 10; § VI.A.6.

446. Pelc teaches an analog-to-digital converter. "The detector elements receiving the transmitted radiation produce electrical signals which may be

converted to digital values by an analog to digital converter for the later development of an image or for other processing by computer equipment." Ex. 1015 at 2:1–5. I address Pelc's disclosure of an analog-to-digital converter in greater detail above. *See, e.g.*, § XI.A.1.f.

h. Output device

447. Finally, claim 1 recites "an output device connected to said microprocessor and adapted for receiving a tomographical densitometry model from said microprocessor." The '301 patent describes an "output device" as follows: "Without limitation on the generality of output devices 26, it can comprise a monitor, a display, a printer, a communications link, and/or another computer." Ex. 1002 at 4:39–43.

448. Pelc discloses "a CRT display . . . to display the reconstructed image and other information . . . ." Ex. 1015 at 35:31–36. Pelc further discloses that the "reconstructed slice images" generated by the Pelc system's computer "may be displayed on a conventional CRT tube or may be converted to a film record by means of a computer controlled camera." *Id.* at 4:17–20.

2. Claim 2

449. Claim 2 depends from claim 1 and further recites "wherein said positioning motor is adapted for positioning said X-ray equipment with respect to three axes of movement."

450. It is my opinion that Pelc discloses this limitation and thus anticipates claim 2. It is further my opinion that Pelc renders claim 2 obvious (in combination with Cann, as discussed above with respect to claim 1). I address the motivation to combine and reasonable expectation of success with respect to these references in Section XI.B.1.a in the context of the ’374 patent. That analysis applies equally here, and I incorporate it by reference.

451. At the outset, I note that the ’301 patent acknowledges that positioning with respect to three axes of movement was not novel. Ex. 1002 at 4:17–23 (“The microprocessor 6 controls a positioning motor 10 which is operably connected to X-ray equipment 12 and is adapted for moving same through three axes of movement. Examples of X-ray equipment adaptable for use with the present invention are disclosed in U.S. Pat. No. 5,533,080; U.S. Pat. No. 5,838,765; and U.S. Pat. No. Re. 36,162, which are incorporated herein by reference.”). In fact, it was a standard feature of CT systems from the relevant period. Pelc describes such systems as follows: “The fan beam and detector array may be mounted to the c-arm so that the fan beam and the detector array may rotate about a fan beam axis connecting the radiation source and the detector array.” Ex. 1015 at 7:9–12. Pelc further teaches that this system can simultaneously move along that axis of rotation (via “longitudinal rails . . . which

allow the gantry pallet . . . to be positioned longitudinally . . . .”). *Id.* at 13:34–14:2; *see also* Figs. 1, 6, 9, 15, 18, 19.

3. Claim 3

452. Claim 3 depends from claim 1 and further recites the system “wherein said conversion means comprises an analog-to-digital converter connected to said detector array.

453. It is my opinion that Pelc discloses this limitation and thus anticipates claim 3. It is further my opinion that Pelc renders claim 3 obvious (in combination with Cann, as discussed above with respect to claim 1). I address motivation to combine and reasonable expectation of success with respect to these references in Section XI.B.1.a with respect to the ’374 patent. That analysis applies equally here, and I incorporate it by reference.

454. As explained above, *see* Section XI.B.1.f, Pelc discloses an analog-to-digital converter. Ex. 1015 at 2:1–5; *see also id.* at 33:34–34:16; Fig. 19.

4. Claim 4

455. Claim 4 depends from claim 3 and further recites the system “wherein said conversion means conversion means includes a merger device connected to said analog-to-digital converter and to said microprocessor.”

456. It is my opinion that Pelc discloses this limitation and thus anticipates claim 4. It is further my opinion that Pelc renders claim 4 obvious (in combination

with Cann, as discussed above with respect to claim 1). I address motivation to combine and reasonable expectation of success with respect to these references in Section XI.B.1.a with respect to the ’374 patent. That analysis applies equally here, and I incorporate it by reference.

457. The ’301 patent describes the concept of a “merger device” as follows:

> Analog signals from the detector array 16 are output to an analog-to-digital (A/D convertor 20, from which digitized signals are transmitted to a merger device 22 for merging into formats suitable for processing and analyzing by the microprocessor 6. The microprocessor 6, using data from the merger device 22, creates a tomographical densitometry model 24 which is transmitted to an output device or devices 26.

Ex. 1002 at 4:32–36. As I note above, *see* Section VI.A.8, it is my understanding that the term “merger device” has been construed to mean “a device that merges digitized signals into a data output suitable for processing and analyzing by a microprocessor.”

458. As explained above, Pelc’s CT system generates densitometrical tomographic models. These models incorporate the data collected at various positions of the X-ray source and detector. Thus a POSA would understand the “computer 56” in Pelc to be a merger device because it is programmed to receive,

store, and perform calculations on image data received from multiple scans to generate a tomographic model.

459. A POSA would understand that the aspect of CT devices that the ’301 patent terms a “merger device” is inherent in any CT device. The very nature of CT is that the device must gather data from multiple scans and then “merge” that data to generate the resulting voxel values and, ultimately, the tomographic model. This was well understood before the priority date of the ’301 patent. For example, Bushberg discloses that “[i]n a CT scanner, the computer orchestrates the acquisition of a large number of transmission measurements taken through the object being scanned and stored this raw data. The raw data, after some preliminary algebra, are reconstructed to produce the tomographic images.” Ex. 1021 (Bushberg) at 244.

5. Claim 5

460. Claim 5 depends from claim 1 and further recites the system “wherein said X-ray equipment comprises a dual energy level, restricted beam device.”

461. It is my opinion that Pelc discloses this limitation and thus anticipates claim 5. It is further my opinion that Pelc renders claim 5 obvious (in combination with Cann, as discussed above with respect to claim 1). I address motivation to combine and reasonable expectation of success with respect to these references in

Section XI.B.1.a with respect to the ’374 patent. That analysis applies equally here, and I incorporate it by reference.

462. Pelc teaches dual-energy scanning, as explained above. Ex. 1015 at 2:14–17, 6:25–29. Moreover, as explained above, Pelc discloses that the X-ray source of the Pelc system “includes an x-ray tube together with filter and collimator . . . .” Ex. 1015 at 14:24–25, 22:10–11, Fig. 8. As explained above, a POSA would understand that the collimator is a “restricted beam device” as recited in claim 5 of the ’301 patent. Finally, I note that a POSA would understand that, as of the priority date, CT devices were required to use restricted beams to avoid exposing patients to unnecessary radiation, and Pelc thus inherently includes a restricted beam device. Ex. 1025 (21 C.F.R. § 1020.31, April 1998) at 566.

6. Claim 6

463. Claim 6 depends from claim 1 and further recites the system “which includes . . . a preprogrammed scan path for said X-ray equipment, said scan path being programmed into said microprocessor.”

464. It is my opinion that Pelc discloses this limitation and thus anticipates claim 6. It is further my opinion that Pelc renders claim 6 obvious (in combination with Cann, as discussed above with respect to claim 1). I address motivation to combine and reasonable expectation of success with respect to these references in

Section XI.B.1.a with respect to the ’374 patent. That analysis applies equally here, and I incorporate it by reference.

465. Pelc teaches a preprogrammed scan path for the X-ray equipment. “The control system of a CT imaging system suitable for use with the present invention has gantry motor controller 242 which controls the rotational speed and position of the C-arm 40 and provides information to computer 56 regarding gantry position . . . .” *Id*. at 35:9–13. “The speed and position of table 12 with respect to the image plane 218 and field-of-view 224, is communicated to and controlled by the computer 56 by means of table motor controller 250. The computer 56 receives commands and scanning parameters via operator console 58 which is generally a CRT display and keyboard which allows the user to enter parameters for the scan and to display the reconstructed image and other information from the computer 56.” *Id.* at 35:28–36.

466. Preprogrammed scan paths were standard in CT equipment of the time. For example, Bushberg explains that “[i]n a CT scanner, the computer orchestrates the acquisition of a large number of transmission measurements taken through the object being scanned and stores this raw data.” Ex. 1021 (Bushberg) at 244.

7. Claim 7

467. Claim 7 depends from claim 1 and further recites the system "wherein said output device includes a color monitor adapted to receive said tomographical densitometry model output color-coded to represent densitometry."

468. It is my opinion that Pelc renders claim 7 obvious (in combination with Cann, as discussed above with respect to claim 1), and in further view of the state of the art. I address motivation to combine and reasonable expectation of success with respect to these references in Section XI.B.1.a with respect to the '374 patent. That analysis applies equally here, and I incorporate it by reference.

469. The '301 patent acknowledges that use of color-coding to represent bone mineral density was known in the art, stating in the Background of the Invention that "BMD images use color to identify varying densities." Ex. 1002 at 2:12.

470. Pelc describes "a CRT display . . . to display the reconstructed image and other information . . . ." Ex. 1015 at 35:31–36. This display is "adapted for receiving a tomographic model" from the computer. Pelc explains that "reconstructed slice images" generated by the computer "may be displayed on a conventional CRT tube or may be converted to a film record by means of a computer controlled camera." *Id.*at 4:17–20; *see also* Fig. 19 (referring to an "operator console" 60 connected to the computer); Fig. 1 (depicting the operator console 60 with a display).

471. A POSA as of the priority date of the ’301 patent, would understand that the displaying means disclosed in Pelc would be a color monitor. Alternatively, a POSA would understand that use of a color monitor to display color-coded results would be obvious in light of the state of the art in 1999. *See, e.g.*, Ex. 1016 (Rothman) at 43, 121–22, 131 (providing examples of color-coded CT models); Ex. 1031 (Hosie) at 32 (discussing a color monitor display and a printer for reproducing the result displayed on the color monitor). The ’301 patent itself discloses that the use of color images to provide densitometry information was known in the prior art as previously mentioned, and color monitors were ubiquitous as of the December 1999 priority date of the, thus a POSA would have had a reasonable expectation of success in using a color monitor with Pelc’s CT system to disclose color-coded densitometry models. The POSA would have been motivated to do so as a color-coded densitometry model may be an easier visual representation of the patient structure for the medical professional to analyze.

8. Claim 8

472. Claim 8 depends from claim 1 and recites “[t]he system according to claim 1 wherein said output device includes a color printer adapted to print images color-coded to correspond to the densitometry of said model.”

473. It is my opinion renders claim 8 obvious (in combination with Cann, as discussed above with respect to claim 1), and in further view of the state of the

art. I address motivation to combine and reasonable expectation of success with respect to these references in Section XI.B.1.a with respect to the ’374 patent. That analysis applies equally here, and I incorporate it by reference.

474. As noted above with respect to claim 7, color-coding representation of densitometry information was known, as the ’301 patent admits. Like color monitors, color printers were commonly in use as of the 1999 priority date of the ’301 patent. It would have been obvious to a POSA to use a color printer to print color-coded representations of the densitometry of the models generated by Pelc’s CT device.

9. Claim 10

475. Independent claim 10 of the ’301 patent is directed to a method of tomographically modeling dental and orthopedic densitometry using system components that generally overlap with those recited in claim 1. As with claim 1, it is my opinion that Pelc renders claim 10 obvious (in combination with Rothman or in combination with Cann and Rothman). I address motivation to combine and reasonable expectation of success with respect to these references in Section XI.B.1.a with respect to the ’374 patent. That analysis applies equally here, and I incorporate it by reference.

a. Preamble

476. The preamble to claim 10 of the ’301 patent recites: “A method of tomographically modeling dental and orthopedic densitometry, which includes the steps of . . . .”

477. I understand that there may be a legal dispute as to whether the preamble to claim 10 is limiting. I do not offer an opinion on the legal question of whether it is, or is not, limiting.

478. To the extent the preamble is limiting, Pelc in combination with Cann and/or Rothman teaches a system and method for tomographically modeling dental structure densitometry, for the same reasons discussed above in connection with claim 1 of the ’301 patent. *See* § XI.B.1. As I explain in greater detail below, each of the structural elements recited in claim 10 is disclosed by or obvious over Pelc in combination with Cann and/or Rothman, and the claimed steps are consistent with the manner in which a POSA would expect the Pelc system to be used for the purposes disclosed in the reference.

b. The “providing” steps – common structural elements with claim 1

479. Claim 10 refers to the following steps calling for the “providing” of certain equipment:

> (a) “providing a controller with a microprocessor and a memory device connected to said microprocessor”;

(b) "providing an input device connected to said microprocessor"; (e) "providing X-ray equipment with an X-ray source and an X-ray detector; and

(j) "providing an output device connected to said microprocessor."

The components to be "provid[ed]" in these steps are equivalent to the corresponding system components recited in claim 1 of the '301 patent. *See* §§ XII.B.1.b (controller), XII.B.1.d (input device), XII.B.1.f (X-ray equipment), XII.B.1.h (output device). I incorporate my analysis of those claim elements here by reference.

c. Inputting and storing a patient densitometry model

480. Steps (c) and (d) of claim 10 recite, respectively, "inputting patient diagnostic parameters with said input device," and "storing said diagnostic parameters in memory."

481. Pelc discloses inputting patient diagnostic parameters. For example, Pelc discloses: "The computer 56 receives commands and scanning parameters via operator console 58 which is generally a CRT display and keyboard which allows the user to enter parameters for the scan . . . ." Ex. 1015 at 35:31–36. A POSA would understand that this information could be input in a variety of ways, such as from another computer or memory device or through a communications link. Pelc also discloses storing patient diagnostics in memory. *See id.* at 36:1–3 ("A mass storage device 57 provides a means for storing operating programs for the CT

imaging system, as well as image data for future reference by the user.") As discussed for claim 18 below (Section XII.B.17), a POSA would have been motivated to use Pelc's system to perform comparisons of a patient's current scan with a preexisting scan and would have had a reasonable expectation of success in doing so. In order to perform this comparison, the prior model would need to be input and stored in the microprocessor disclosed by Pelc.

d. Use of the X-ray Equipment

482. Steps 10(f)–(g), respectively, recite "positioning said X-ray equipment and a patient's dental/orthopedic structure between said source and said detector array" and "emitting an X-ray beam from said source through said dental structure to said detector array." A POSA would recognize that this is the expected use of the X-ray equipment disclosed in Pelc (and the expected use of CT equipment generally). Pelc discloses the placement of the target tissue between the X-ray source and detector. For example, in Figure 18 reproduced below, Pelc shows the patient (highlighted in red) positioned between radiation source 44 (highlighted in green) and detector array 50 (highlighted in yellow):

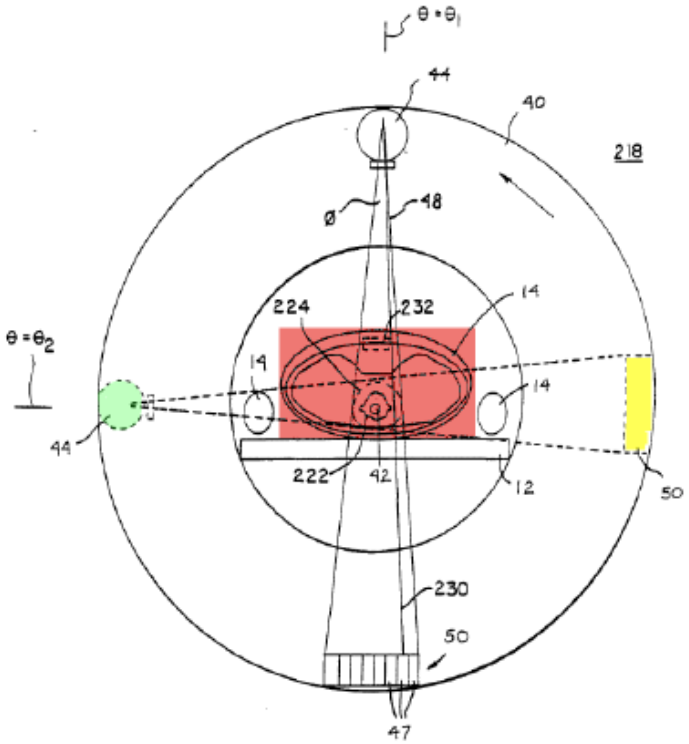

FIG. 18

Rothman discloses that the target tissue may be a dental structure.

e. Forming and outputting a densitometrical model

483. Step 10(i) recites "forming with said microprocessor a tomographical densitometry model of said dental/orthopedic structure." Step 10(k) recites "outputting said densitometry model to said output device." A POSA would understand that the purpose and intended use of the Pelc system is to generate such models and output them to a display or other output media.

10. Claim 11

484. Claim 11 depends from claim 10 and recites the additional steps of "emitting, detecting, digitizing, and storing signals corresponding to first and second energy levels from said X-ray source."

485. It is my opinion that Pelc discloses this limitation. It is also my opinion that Pelc renders claim 11 obvious (in combination with Rothman or in combination with Cann and Rothman, as discussed above with respect to claim 10). I address motivation to combine and reasonable expectation of success with respect to these references in Section XI.B.1.a with respect to the '374 patent. That analysis applies equally here, and I incorporate it by reference.

486. As explained above in connection with claim 5 of the '301 patent, these are standard aspects of CT scanning using the system disclosed by Pelc, which includes dual-energy scanning. *See* § XII.B.5. I incorporate that analysis here by reference.

11. Claim 12

487. Claim 12 depends from claim 10 and recites the additional steps of "inputting to said controller a predetermined scan path for said X-ray equipment" and "traversing said X-ray equipment along said scan path."

488. It is my opinion that Pelc discloses this limitation. It is also my opinion that Pelc renders claim 12 obvious (in combination with Rothman or in combination with Cann and Rothman, as discussed above with respect to claim

10). I address motivation to combine and reasonable expectation of success with respect to these references in Section XI.B.1.a with respect to the ’374 patent. That analysis applies equally here, and I incorporate it by reference.

489. As I explain above in connection with claim 6 of the ’301 patent, Pelc discloses a preprogrammed scan path. *See* § XII.B.6. I incorporate that analysis here by reference.

12. Claim 13

490. Claim 13 depends from claim 12 and recites the additional step of “providing a positioning motor connected to said microprocessor and to said X-ray equipment for moving through three axes of movement along said scan path.” It is my opinion that Pelc renders claim 13 obvious (in combination with Rothman or in combination with Cann and Rothman, as discussed above with respect to claim 10). I address motivation to combine and reasonable expectation of success with respect to these references in Section XI.B.1.a with respect to the ’374 patent. That analysis applies equally here, and I incorporate it by reference. As I explain above, the Pelc system has a positioning motor connected to the processor that positions the X-ray equipment through three axes of movement along the scan path. *See* § XII.B.12. I incorporate that analysis here by reference. I also incorporate my analysis with respect to claim 12 by reference here. *See* § XII.B.11.

13. Claim 14

491. Claim 14 depends from claim 10 and recites the step of "detecting incipient caries with said tomographical densitometry model."

492. It is my opinion that Pelc renders claim 14 obvious (in combination with Rothman or in combination with Cann and Rothman, as discussed above with respect to claim 10). I address motivation to combine and reasonable expectation of success with respect to these references in Section XI.B.1.a with respect to the '374 patent. That analysis applies equally here, and I incorporate it by reference.

493. The result of using Pelc's system in the manner envisioned by Pelc is a tomographical densitometry model, as explained above. Accordingly, one could determine from the resulting model a variety of information relating to the density of the patient's teeth. A POSA would understand that incipient caries (i.e., cavities) would be detectable as differences in density in a tooth, just as Rothman discloses a series of dental conditions that may be evaluated using CT. Radiographs, which provide less information than a tomographical densitometry model, had long been used to detect incipient caries, and it would have been obvious to a POSA to use the a CT densitometry model for that purpose.

14. Claim 15

494. Claim 15 depends from claim 10 and recites the additional step of "detecting dental fractures with said tomographical densitometry model."

495. It is my opinion that Pelc renders claim 15 obvious (in combination with Rothman or in combination with Cann and Rothman, as discussed above with respect to claim 10). I address motivation to combine and reasonable expectation of success with respect to these references in Section XI.B.1.a with respect to the ’374 patent. That analysis applies equally here, and I incorporate it by reference.

496. The result of using Pelc’s system in the manner envisioned by Pelc is a tomographical densitometry model, as explained above. A POSA would understand that one could use such information to detect dental fractures.

497. Rothman, for example, discloses a “CT scan demonstrate[ing] a fracture through the distal [dental] implant.” Ex. 1016 (Rothman) at 128. Rothman further discloses that while “[t]he development of a stress fracture is rare,” “use of CT should be considered if the cause of persistent pain is not found on routine dental radiographs.” *Id.*

15. Claim 16

498. Claim 16 depends from claim 10 and recites the additional step of “detecting apical abscesses with said tomographical densitometry model.”

499. It is my opinion that Pelc renders claim 16 obvious (in combination with Rothman or in combination with Cann and Rothman, as discussed above with respect to claim 10). I address motivation to combine and reasonable expectation

of success with respect to these references in Section XI.B.1.a with respect to the ’374 patent. That analysis applies equally here, and I incorporate it by reference.

500. The result of using Pelc’s system in the manner envisioned by Pelc is a tomographical densitometry model, as explained above. A POSA would understand that one could use such information to detect apical abscesses.

501. Rothman, for example, discloses using CT scanning to detect and assess “apical periodontal abscesses,” and notes that CT offers benefits over conventional radiographs in this regard because “[t]he full extent of the cavity is difficult to assess on conventional radiographs.” Ex. 1016 (Rothman) at 54.

16. Claim 17

502. Claim 17 depends from claim 10 and further recites “the additional step of analyzing the extent of osseointegration of a dental or orthopedic prostheses with respect to a patient’s dental or orthopedic structure with said tomographical densitometry model.”

503. It is my opinion that Pelc renders claim 17 obvious (in combination with Rothman or in combination with Cann and Rothman, as discussed above with respect to claim 10). I address motivation to combine and reasonable expectation of success with respect to these references in Section XI.B.1.a with respect to the ’374 patent. That analysis applies equally here, and I incorporate it by reference.

504. The result of using Pelc's system in the manner envisioned by Pelc is a tomographical densitometry model, as explained above. A POSA would understand that one could use such information to analyze osseointegration of a prosthesis.

505. Rothman provides a lengthy discussion of assessing osseointegration using dental CT. Ex. 1016 (Rothman) at 113–22. Rothman explains:

> The osseointegrated implant demonstrates intimate contact with the host bone (Fig 6-1c). The space between the implant fills in, except for the most superficial portion of the implant. Depending on implant design, several millimeters of the implant may not be osseointegrated at the mucosal border. A faint halo can be seen on those axial CT slices near the mucosal border. Determination of the presence of osseointegration should be made on the axial views, because they are the images with the highest resolution.

Id. at 114.

17. Claim 18

506. Claim 18 depends from claim 10 and recites the additional step of "comparing said patient's densitometry model to pre-existing densitometry model."

507. It is my opinion that Pelc renders claim 18 obvious (in combination with Rothman or in combination with Cann and Rothman, as discussed above with respect to claim 10) and in further combination with Xu and/or Milestone. I address motivation to combine and reasonable expectation of success with respect to these references in Sections XI.B.1.a and XI.B.6 with respect to the ’374 patent. That analysis applies equally here, and I incorporate it by reference.

508. As noted above, the ’301 patent admits that means for comparing tomographic models were known in the prior art. Ex. 1002 at 2:13–15. Moreover, I am informed that Osseo admitted in the Delaware Court proceedings that “one of skill in the art would know how to compare two sets of data in a computer,” and that before the priority date there was commercially available software capable of producing the claimed comparisons. Ex. 1012 (SJ Hearing Transcript) at 17:23–18:15.

509. As I explain above, *see* Section V.I, a POSA would understand that comparing patient data over time (including CT data) is a routine aspect of diagnosis and treatment. Moreover, it was well known by the priority date that a microprocessor could be programmed with software to compare these comparisons, as I explain in greater detail above. *See* §§ X.E–F.

510. Pelc includes memory for storing CT data, as explained above. A POSA would have understood that that computer and memory of Pelc could be

readily adapted to perform comparisons between a pre-existing model and a patient's current model using known software, such as that disclosed by Xu and/or Milestone, as addressed above in greater detail. *See* § XI.B.6; *see also* §§ V.I., X.E, X.F.

18. Claim 19

511. Claim 19 depends from claim 10 and recites the addition steps of "providing a color output device connected to said microprocessor" and "color coding said densitometry model in colors corresponding to the patient's or orthopedic structure density and outputting said densitometry model to said output device."

512. It is my opinion that Pelc renders claim 19 obvious (in combination with Rothman or in combination with Cann and Rothman, as discussed above with respect to claim 10), and in further view of the state of the art. I address motivation to combine and reasonable expectation of success with respect to these references in Section XI.B.1.a with respect to the '374 patent. That analysis applies equally here, and I incorporate it by reference.

513. Pelc discloses a monitor and a computer capable of performing these steps. "The acquired tomographic projection set is typically stored in numerical form for computer processing to 'reconstruct' a slice image according [to] reconstruction algorithms known in the art. The reconstructed slice images may be

displayed on a conventional CRT tube or may be converted to a film record by means of a computer controlled camera." Ex. 1015 at 4:14–20. As explained above, these were steps that were known and common with respect to medical and dental CT.

19. Claim 20

514. Independent claim 20 of the '301 patent recites: "A method of tomographically modeling dental and orthopedic densitometry, which includes the steps of:

a) providing a controller with a microprocessor and a memory device connected to said microprocessor;

b) providing an input device connected to said microprocessor;

c) inputting with said input device dental or orthopedic patient diagnostic parameters, including a pre-existing densitometry model;

d) storing said diagnostic parameters in said memory device;

e) providing X-ray equipment connected to said microprocessor, said equipment including an X-ray source and an X-ray detector array;

f) positioning said X-ray equipment and a patients' dental or orthopedic structure relative to each other with said patient's dental

or orthopedic structure between said source and said detector array;

g) emitting an X-ray beam from said source at a first –ray beam energy level, passing same through said dental or orthopedic structure, and detecting same with said detector array;

h) outputting a signal corresponding to said detected X-ray beam from said detector array;

i) digitizing said detector array output signal;

j) storing said digitized output signal in said memory device;

k) storing said digitized output signal in said memory device;

l) merging said stored output signals to form a present tomographical densitometry model of said dental or orthopedic structure;

m) comparing said present densitometry model with said pre-existing densitometry model;

n) adjusting said present densitometry model to account for patient parameters including age and gender;

o) providing an output device connected to said microprocessor;

p) color coding said present tomographical densitometry model with colors corresponding to dental or orthopedic structure density; and

q) outputting said color-coded model to said output device.”

515. It is my opinion that Pelc renders claim 20 obvious in combination with Rothman or with Cann and Rothman, and in further combination with Xu and/or Milestone, and in view of the state of the art. I address motivation to combine and reasonable expectation of success with respect to these references in Sections XI.B.1.a and XI.B.6.

516. Because claim 20 recites a method that combines the steps and expected use of the apparatus previously discussed, the following table provides a reference to where I have already addressed each of the claim elements of claim 20.

Claim 20	Prior Reference in § XII.B	Prior Claim(s)
Preamble	B.1.a, B.9.a	1, 10
(a) controller	B.1.b, B.9.b	1, 10
(b) input device	B.1.d, B.9.b	1, 10
(c) inputting parameters	B.9.c	10
(d) storing parameters	B.9.c	10
(e) X-ray equipment	B.1.f, B.9.b	1, 10
(f) positioning X-ray equipment	B.9.d	10
(g) emitting and detecting X-ray	B.9.d	10
(h) outputting signal	B.1.g, B.3, B.9.d	1, 3, 10
(i) digitizing signal	B.1.g, B.3, B.9.d	1, 3, 10
(j) storing digitized signal	B.1.c, B.9.e	1, 10
(k) dual-energy	B.5	5, 11
(l) merging signals to create model	B.1.a, B.4, B.9.i	1, 4, 11
(m) comparing model to pre-existing model	B.17	18
(o) output device	B.1.h, B.9.b	1, 10
(p) color-coding model	B.7, A.8, B.18	7, 8, 19
(q) outputting color-coded model	B.7, B.8, B.18	7, 8, 19

517. The only step of independent claim 20 not previously addressed is step (n), which recites: "adjusting said present densitometry model to account of patient parameters including age and gender." The specification of the '301 patent states that "tomographical densitometry models can be corrected and/or adjusted to account for patients' age, gender, physical characteristics, etc." Ex. 1002 at 14:12–16. However, I note that the '301 patent does not claim to have invented the concept of performing such adjustments. To the contrary, the POSA would have been motivated to make such adjustments, and it was well known in the prior art how to do so. For example, as of the priority date, it was well known that densitometry models were corrected and/or adjusted to account for a patient's parameters, as with the case of osteoporosis. *See* Ex. 1032 (WHO 1994) at Fig. 1; *see also* § V.I. Thus, a POSA would have had a reasonable expectation of success in adapting "computer 56" of Pelc to adjust any generated densitometry model to account for a patient's parameters because these adjustments were routinely made in medical imaging.

XIII. DETAILED OPINIONS REGARDING INVALIDITY GROUNDS OF THE '262 PATENT

A. The Addition of Electron Beam Sources/Sensors to the '262 Patent

518. Claim 1 of the '262 patent recites, among other limitations, "a dental or orthopedic input device including an energy source and an energy sensor." As I

discussed above, the claim should be construed to cover an X-ray source and sensor as well as an electron beam source and sensor. *See* § VI.B.4.

519. The ’262 patent describes the electron beam source and sensor in a newly added section the patent, titled “IV. Modified Embodiment Densitometry Modeling Systems.” Ex. 1003 at 5:56–7:17. This section is not present in the specification of the Dec. 1, 1999 patent application (U.S. Patent Application No/452,348 Application) that led to the ’301 and ’374 patents, or any patent or application prior to the one leading to the ’262 patent. The ’348 application’s specification, as reflected in the ’301 and ’374 patents, discloses only X-ray sources and sensors. It does not mention electron beam sources or sensors.

520. I have been asked whether a POSA, reading the ’348 application, would have recognized that the inventor invented a system that could be implemented by electron beam sources and sensors as an alternative to X-ray sources and sensors. My answer to that is no—a POSA would not have understood from the ’348 application that the inventor possessed the idea of using electron beam sources and sensors on the basis of that text. The ’348 application discusses only X-ray equipment, as was well known in the imaging field and had long been used for densitometrical and tomographical purposes. As of the priority date, a POSA would not understand electron beam sources and sensors, as described in the ’262 patent, to be interchangeable with X-ray sources and sensors. The electron

beam sources described in the patent emits a collimated electron beam as the source of energy. Ex. 1003 at 6:10–28. A POSA would understand that electron beams are very different from X-ray beams, including in the type of radiation delivered to the patient, the interactions of the radiation with the patient, and the equipment required to supply and detect the radiation. Even today, particle beam imaging (such as energetic electrons, positrons and protons) has seen only limited use within radiation oncology.

B. Massie Publication

1. Claim 1

521. It is my opinion that the Massie Publication discloses each and every limitation of claim 1 and thus anticipates claim 1. It is my opinion that the Massie Publication also renders obvious claim 1, assuming that it is prior art (*i.e.*, assuming the ’262 patent’s priority date is January 24, 2003).

a. “A digital modeling system for creating dental or orthopedic models of patients, which system comprises”

522. I understand that there may be a legal dispute as to whether the preamble is limiting. I do not offer an opinion on the legal question of whether it is, or is not, limiting.

523. To the extent it is limiting, the Massie Publication discloses a modeling system for creating dental or orthopedic densitometry models of patients. *See* Ex. 1017 at 1:7–8 (“The present invention relates generally to dental and

orthopedic diagnosis and treatment, and in particular to a densitometry modeling system and method."); 5:6–9 ("The principle objects and advantages of the present invention include: providing a dental and orthopedic diagnostic application for densitometry; providing such an application which includes a method for modeling dental and orthopedic structure using densitometry . . ."); 7:4-9:7; Fig. 1. Further, the Massie Publication teaches that this system is digital: "The system 2 includes a controller 4 with a microprocessor 6 connected to a digital memory device 7." *Id.* at 7:6–7; *see also id.* at 9:19–21 ("The scanning procedure is commenced by collimating a first energy band beam, detecting emissions from same with a detector array, and converting the analog output of the detector array to a digital signal.").

524. The system disclosed in the Massie Publication is quantitative because it provides information regarding bone density, which is a quantitative value. *Id.* at 5:10–11 ("providing a color-coded output model showing dental density"); 9:2–6 ("The topographical densitometry model 24 can also be useful for monitoring osseointegration, since the density of the dental/orthopedic structure 18 (tissue and bone) in the vicinity of an implant 28 or other prostheses can provide an important diagnostic tool for the use of the dental or medical practitioner in assessing the effectiveness of an implant or prosthetic procedure."). Further, densitometry models themselves are quantitative.

b. “a computer including a digital memory storing patient densitometry information, an input and an output”

525. The Massie Publication teaches a “controller 4 with a microprocessor 6 connected to a digital memory device 7.” *Id*. 7:6–7. The Massie Publication further teaches that “microprocessor 6” and “memory device 7” can comprise a number of suitable hardware devices that are commercially available, such as commercially available personal computers. *Id*. 7:7–12.

526. The Massie Publication further teaches that “microprocessor 6 is adapted to receive input from one or more input devices 8, such as a keyboard, a pointing device (*e.g.*, a mouse), a communications link, or another computer,” *id.* at 7:15–17, and that the generated “tomographical densitometry model 24” is “transmitted to an output device or devices 26,” which can “comprise a monitor, a display, a printer, a communications link, and/or another computer.” *Id*. at 8:15–19.

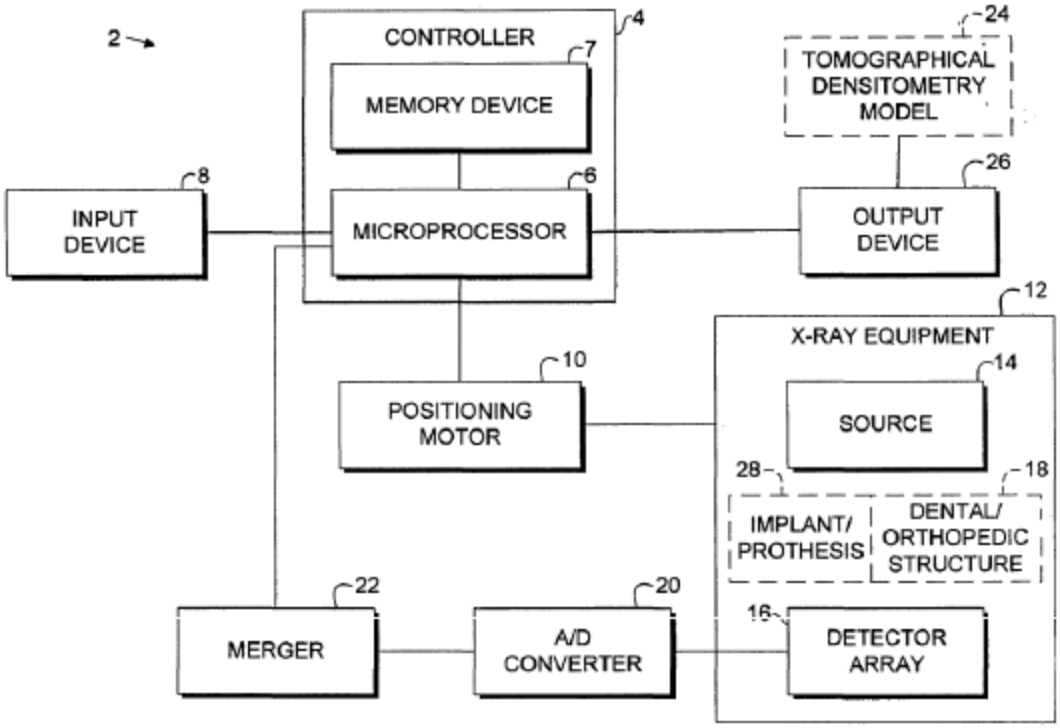

Fig. 1

527. I have been informed by counsel that the claim element "storing patient densitometry information" is not limiting because it is a statement of intended use. Nonetheless, if it is limiting, the Massie Publication discloses "storing patient densitometry information." *Id.* at Claim 9a (reciting a "means for storing a pre-existing tomographical dental/orthopedic densitometry model"); 7:17–19 ("Without limitation on the generality of useful data which can be input via the input device(s) 8, such data can include: 1) a patient's dental and orthopedic records, including previous tomographical densitometry models . . ."); 9:13–14 ("Diagnostic parameters are input to the system and can comprise, for example, the patient's prior tomographical densitometry models and standardized models.").

c. "a dental or orthopedic input device including an energy source and an energy sensor; said source and said sensor being placed with at least a portion of the patient's dental or orthopedic structure therebetween"

528. The Massie Publication discloses a dental or orthopedic input device including an energy source, "X-ray beam source 14," and an energy sensor, "detector array 16." *Id*. at 8:7–8 ("The X-ray equipment 12 includes an X-ray beam source 14 and a detect array 16."). It further discloses that the "source and the detector array 14, 16 are adapted for positioning on either side of a patient's dental/orthopedic structure 18." *Id*. at 8:10–12.

d. "said sensor transferring signals to the computer input"

529. The Massie Publication teaches that signals from the sensor, "detector array 16," are transferred to the computer input via "analog-to-digital (A/D) converter 20" and "merger device 22." *Id*. at 8:13–15 ("Analog signals from the detector array 16 are output to an analog-to-digital (A/D) converter 20, from which digitized signals are transmitted to a merger device 22 for merging into formats suitable for processing and analyzing by the microprocessor 6."); Fig. 1.

e. "said signals representing densitometry of the patient's dental or orthopedic structure"

530. The Massie Publication further discloses that said signals represent a densitometry model of a patient's dental or orthopedic structure: "The microprocessor 6, using data from the merger device 22, creates a tomographical

densitometry model 24 which is transmitted to an output device or devices 26." *Id.* at 8:15–17. A POSA would understand that "densitometry model 24" is that of a dental or orthopedic structure because the Massie Publication goes on to state the "tomographical densitometry model 24 can also be useful for monitoring osseointegration, since the density of the dental/orthopedic structure 18 (tissue and bone) in the vicinity of an implant 28 or other prostheses can provide an important diagnostic tool for the use of a dental or medical practitioner . . ." *Id*. at 9:2–5.

f. "said computer creating, storing and comparing three-dimensional digital densitometry models without the use of fiducial markers of patient dental or orthopedic structure"

531. This claim element recites five different limitations: (1) creating, (2) storing, (3) comparing (4) three-dimensional digital densitometry models (5) without the use of fiducial markers, which I address separately below.

532. **Creating:** The Massie Publication discloses creating a densitometry model: "The X-ray output is processed by the microprocessor for creating a densitometry model." *Id*. at 4:15–16; 5:6–9.

533. **Storing:** The Massie Publication discloses storing patient densitometry models. *Id*. at Claim 9a (reciting a "means for storing a pre-existing tomographical dental/orthopedic densitometry model").

534. **Comparing:** The Massie Publication discloses comparing densitometry models. *Id*. at Claim 18 ("inputting to said microprocessor a pre-

exiting tomographical densitometry model; and comparing said patient's current densitometry model to said pre-existing densitometry model"); 4:20–5:1 ("The densitometry output is digitized and merged to provide a tomographical model, which can be compared to predetermined parameters unique to the patient."); 10:7–9 ("The digitized detector array output is merged and compared to the diagnostic parameters which are stored in the computer's memory.").

535. Further, the use of the Massie Publication system to perform comparisons would have been obvious. The '262 patent itself admits that comparing tomographic models was known in the prior art. Ex. 1003 at 2:23–25. And I understand Osseo has admitted at a hearing in the Delaware litigation that there existed commercially available software capable of performing comparisons of tomographic models as of the priority dates of the '262, '301, and '374 patents. Ex. 1012 (SJ Hearing Transcript) at 17:23–18:21.

536. Additionally, as I previously described in Section V.I, a POSA would understand that comparisons of medical images are routinely performed for diagnostic and care purposes. As of the priority date of the '262 patent, it was well-known that a computer could be programmed with comparison software, as evident from my discussion of Xu in Section X.E and Milestone in Section X.F. And it was also evident that some of the advantages to programming a computer with comparison software was to help medical professionals identify and quantify

small changes over time or abnormalities that they may otherwise miss as well as to save medical professionals time on examining images. Thus it would have been obvious to a POSA to program the microprocessor of the Massie Publication to perform comparisons, and a POSA would have had a reasonable expectation of success in view of the state of the art.

537. **Three-dimensional digital densitometry models:** The Massie Publication discloses that the tomographic densitometry models created, stored, and compared are three-dimensional models. First, I understand that Osseo, in the Delaware litigation, has admitted that the U.S. patent applications for the ’301 and ’374 patents corresponding to the Massie Publication contain specific disclosure to the use of 3D models in the Delaware litigation. Ex. 1012 (SJ Transcript), 21:21–22:4 (“There is disclosure, specific disclosure of the use of 3D models.”).

538. Second, the Massie Publication incorporates by reference prior art CT systems, including Pelc ’080, Ex. 1007 at 8:5–7, and discusses that the “X-ray beam can [be] suitably collimated to assume any suitable configuration, such as fan, pencil, cone, etc.” Ex. 1017 at 8:8–9. As previously discussed, the use of a cone beam CT system facilitates generating a three-dimensional dataset, which can then be used to create a three-dimensional model. *See* § V.F. This three-dimensional model can be stored and compared as described in the Massie Publication.

539. Moreover, the creation, storage, and comparison of three-dimensional models was obvious as of the priority date of the ’262 patent. Osseo’s counsel stated at a hearing in the Delaware litigation:

> One of ordinary skill in the art would know, at the time of the invention, how to take datasets and make 3D models out of them. It was known. We’re not professing that that’s the invention. It was known at the time, fairly well known by those of ordinary skill in the art how to make 3D models out of image datasets.

Ex. 1012 (SJ Hearing Transcript) at 21:21–22:4. Furthermore, prior art such as Milestone disclosed the creation, storing, and comparison of three-dimensional models well before the priority date of the ’262 patent. *See* § X.F. Three-dimensional models, as I previously discussed, can provide medical professionals more information into a patient’s condition and thus would have been desirable to implement in the medical context. Thus, a POSA would have been motivated to use the imaging system described in the Massie Publication to create, store, and compare three-dimensional models and had a reasonable expectation of success in doing so, as of the priority date of the ’262 patent because such functions of a CT imaging system were commonplace.

540. **Without the use of fiducial markers:** As with the ’262 patent, the Massie Publication does not disclose the use of a fiducial marker. As discussed in

Section VI.B.5, fiducial markers are X-ray attenuating markers placed on or within the structure to be imaged to serve as a reference point. They can be used to help align individual slices in a tomographic model but are not necessary for the creation, storage, or comparison of tomographic models with CT systems. And as previously discussed with Arai and Arai '439, *see* Section XI.A.8, absent any affirmative teaching regarding the use of fiducial markers, a POSA would not read a reference as disclosing the use of fiducial markers.

541. Alternatively, it would be obvious to a POSA to use the system disclosed in the Massie Publication without a fiducial marker. A POSA would be motivated to not use fiducial markers in imaging systems such as that in the Massie Publication because the use of these markers add complexity and cost to the imaging studies and may not be needed in terms of the accuracy of the resulting model.

g. "an output device connected to said computer output and communicating densitometry model comparison information"

542. The Massie Publication discloses "output devices 26" including a monitor, a display, a printer, a communications link, and/or another computer. Ex. 1017 at 8:15–19 ("The microprocessor 6, using data from the merger device 22, creates a tomographical densitometry model 24 which is transmitted to an output device or devices 26. Without limitation on the generality of useful output

devices 26, it can comprise a monitor, a display, a printer, a communications link, and/or another computer.”). Further, the Massie Publication discloses that these output devices are adapted to communicate densitometry information: “For example, a color printer can be utilized to provide a color-coded graphical representation of the tomographic densitometry model 24. The color coding can correspond to densities, thus identifying potential problem areas where decalcification has occurred and resulted in lower density.” *Id*. at 8:19–1:2; 10:9–12 (“The dental/orthopedic densitometry is tomographically modeled and output, for example to a monitor or printer for converting the model to a visual image. The visual image is output in a visible form for use by dental and medical practitioners.”); *see also id.* at 8:15–19.

543. I understand that there may be a legal dispute as to whether the claim element “communicating densitometry model comparison information” is a non-limiting statement of intended use. I do not offer an opinion on the legal question of whether it is, or is not, limiting. In the event that this claim element is limiting, I have been asked to evaluate whether the Massie Publication discloses this limitation in the event that it is limiting. I conclude that the Massie Publication does disclose this limitation, and in the alternative, that it would have been obvious to a POSA to use the same output devices that Massie teaches communicates densitometry models to communicate model comparison information. As I

explained above in Section XIII.B.1.f, Massie discloses the comparison of densitometry models, and such comparison would have been commonplace in medicine. For such information to be of use to a medical professional, it has to be communicated to them via some type of output device. The Massie Publication discloses a number of output devices for this purpose. *See above* § XIII.B.1.g. In the alternative, it would be obvious to a POSA to use the same output devices that communicate densitometry models as described above to also communicate model comparison information because these sets of information are similar, and Massie clearly teaches a system that performs comparison between densitometry models.

h. "imaging software associated with said computer; and"

544. The Massie Publication discloses that the "controller 4 can be programmed in any suitable manner utilizing any of a variety of commercially available programming languages and software development systems." Ex. 1017 at 7:12–14.

i. "a display associated with said output device and displaying information pertaining to said densitometry model"

545. The Massie Publication discloses a display associated with said output device that displays information pertaining to a densitometry model. *See* § XIII.B.1.i.

2. Dependent Claim 2

546. Claim 2, which depends from claim 1, further recites "wherein said source is external."

547. It is my opinion that Massie discloses this limitation, and thus anticipates claim 2. It is also my opinion that Massie renders obvious claim 2.

548. The Massie Publication discloses that the "source [referring to X-ray source 14] and the detect array 14, 16 are adapted for positioning on either side of a patient's dental/orthopedic structure 18". Ex. 1017 at 8:10–12. Further, the Massie Publication states: "The method steps include positioning a patient and positioning the X-ray equipment relative to the patient, *i.e.*, with the patient's dental/orthopedic structure to be examined located between the X-ray source 14 and the detector array 16." *Id*. at 9:10–12. The Massie Publication further references X-ray systems, such as Pelc '080, that it claims are adaptable for use with the present invention. *Id*. at 8:5–7; Ex. 1018 (Pelc '080) (disclosing a CT system where the X-ray source is external to the patient in Figures 1 and 5). In light of these disclosures, a POSA would understand that the "X-ray source 14" of the Massie Publication is external to the patient.

549. Further, there are only a finite number of possible placements for the X-ray source—external or internal to the patient. An external X-ray source placement was well-known and accepted as of the priority date of the '262 patent.

It would have thus been obvious to use an external X-ray source in the system described in the Massie Publication.

3. Dependent Claim 4

550. Claim 4, which depends from claim 1, further recites "wherein said sensor is external."

551. It is my opinion that Massie discloses this limitation and thus anticipates claim 4. It is also my opinion that Massie renders obvious claim 4.

552. For the same reasons discussed for claim 2, the Massie Publication discloses an imaging system with an X-ray sensor that is external to the patient. *See* § XIII.B.2. Further, as with the X-ray source, there is only a finite number of possible placements for the X-ray sensor—external or internal to the patient. An external X-ray sensor placement was well-known and accepted as of the priority date of the '262 patent. It would have thus been obvious to use an external X-ray sensor in the system described in the Massie Publication.

4. Dependent Claim 6

553. Claim 6, which depends from claim 1, further recites a system "which includes: said energy being collimated."

554. It is my opinion that Massie discloses this limitation and thus anticipates claim 6. It is also my opinion that Massie renders obvious claim 6.

555. The Massie Publication discloses the "X-ray beam can suitably [be] collimated to assume any suitable configuration, such as fan, pencil, cone, etc. With the scanning technique disclosed, a restricted (i.e. collimated) beam is preferred." Ex. 1017 at 8:8–10.

C. Arai

1. Claim 1

556. It is my opinion that Arai in combination with Cann, and in further combination with Xu and/or Milestone, renders obvious claim 1. I discuss in detail in Sections XI.A.1.a and XI.A.6 (with respect to the '374 patent) why a POSA would have been motivated to, and had a reasonable expectation of success, in combining these references. That analysis applies equally here, and I incorporate it by reference.

a. "A digital modeling system for creating dental or orthopedic models of patients, which system comprises"

557. I understand that there may be a legal dispute as to whether the preamble is limiting. I do not offer an opinion on the legal question of whether it is, or is not, limiting. To the extent it is limiting, Arai in combination with Cann teaches a digital modeling system for creating dental models of patients. *See* §§ X.A–B, XI.A.1.a (in the context of the '374 patent).

558. Arai discloses a CT system. "An object of the invention is to provide a dual-purpose X-ray imaging apparatus capable of partial CT imaging in addition

to panoramic tomographic imaging." Ex. 1013 at Abstract; 2:3–5. "It is another object of the invention to provide an X-ray imaging apparatus which can conduct a local CT imaging." *Id*. at 2:6–7. "The X-ray imaging apparatus in FIG. 1 can conduct an X-ray panoramic imaging, in addition to an X-ray CT imaging for a local site." *Id*. at 9:49–51.

559. Arai's CT system generates tomographic images. The CT system in Arai takes plural sets of image information and merges them to generate a tomographic image: "Plural sets of image information stored in the frame memory 240 are stored in the image memory for arithmetic 241. A predetermined arithmetic process corresponding to the selected imaging mode is conducted on image information read out from the image memory for arithmetic 241, ***thereby generating a tomographic image*** of the selected mode." *Id*. at 17:42–48 (emphasis added); *see also* 2:1–7 ("panoramic tomographic imaging"); 3:44–54 ("forming a tomographic image"); 3:55–67 ("a tomographic image corresponding to the selected imaging mode can be automatically obtained."); claims 2, 5–7, and 10–11.

560. These tomographic models generated by the CT system disclosed in Arai are of dental structures. *See id.*, Figs. 18, 19, and 24. Arai teaches that "[a]s compared with the prior art, therefore, the range of the imaging region is smaller and the apparatus is suitable as a partial X-ray CT imaging apparatus which

conducts local CT imaging in the dental field." *Id*. at 7:32–36; *see also* 23:8–11 ("For example, an implant operation in the dental treatment can be easily performed while observing the partial CT image displayed on the displaying means 248."). And these models are digital. *Id*. 17:37–48 ("The image signal supplied from the image sensor 38 to the image signal processing means 236 is converted into a digital signal by the A/D converting means 238, and digital-converted image information is stored in the frame memory 240. Plural sets of image information stored in the frame memory 240 are stored in the image memory for arithmetic 241. A predetermined arithmetic process corresponding to the selected imaging mode is conducted on image information read out from the image memory for arithmetic 241, thereby generating a tomographic image of the selected mode.").

561. Further, Arai's CT system is quantitative. As previously described in the background section on Computed Tomography, CT scanners such as the one disclosed in Arai take information from multiple scans to generate a CT number in Hounsfield units that provides information regarding the relative density of material being scanned. *See* § V.D. Bone, for example, has a value of 1000, water 0, and air -1000. Accordingly, while Arai may not explicitly mention densitometry or measuring bone density, a POSA would understand Arai to generate quantitative information regarding density. Further, as evident from the '262 patent's reference to Pelc '080, a POSA would understand a CT system to be quantitative even if it

does not explicitly disclose any calculating of bone density. Ex. 1003 at 4:52–55. The underlying data disclosed in Pelc ’080, like Arai, is quantitative in nature because each voxel forming each tomographic slice has an integer, and thus quantitative, value.

562. Additionally, Cann teaches the use of CT imaging for quantitatively measuring bone mineral content. Ex. 1014 at 493 (“The usefulness of CT for measuring bone mineral in the vertebrae lies in its ability to quantitatively image a thin transverse slice through the abdomen. With this technique, one has the ability to spatially separate cortical and cancellous bone in the spine. Thus, one can measure changes in bone mineral content (a) noninvasively, (b) in cancellous bone, where measurement of changes is more sensitive than in cortical bone, and (c) at the site of the clinical involvement, in the vertebrae.”).

563. It would have been obvious to a POSA to use the quantitative CT system taught in Arai for the densitometry measurements disclosed in Cann. Arai and Cann are both CT imaging systems. A POSA would want a system that is capable of delivering accurate and precise measurements of bone density, as disclosed in Cann. To that end, Cann discloses the use of a phantom for calibrating CT numbers to quantitative bone mineral density. A POSA would thus be motivated to use such a phantom in connection with the system of Arai. Arai itself further discloses that its system could be used in the field of dental diagnosis to

determine the thickness of the jawbone prior to an implant operation. Ex. 1013 at 1:34–36. In addition to the thickness of the jaw, a POSA would recognize that knowledge of the density of the jawbone would also be helpful pre-implantation to assess whether the jaw can adequately support the implant as well as post-implantation to monitor osseointegration, and for that reason would be motivated to combine Arai with Cann as well. Moreover, one stated purpose in Arai of a dual-purpose X-ray imaging apparatus capable of partial CT imaging in addition to panoramic tomographic imaging is to save medical professionals money and space. *See id.* at 1:39–51. Adding a quantitative densitometrical function as described in Cann would additionally save medical professionals money and space, providing further motivation to combine Arai and Cann. Finally, the features of Arai are suited to performing quantitative densitometry. Cann discloses a CT system similar in many respects to that Arai but with the addition of a phantom to more precisely calculate bone mineral density. Accordingly, a POSA would have had a reasonable expectation of success in using CT system in Arai to obtain the quantitative density measurements described in Cann by December 1, 1999 because any modification of the CT system to use a phantom would be minimal, i.e., inclusion of a phantom in the scan to correlate the CT numbers to a known value. For the same reasons, incorporation of the quantitative CT system taught by Cann would not impact any of the combinations discussed below.

b. “a computer including a digital memory storing patient densitometry information, an input and an output”

564. Arai discloses “controlling means 170” and “image signal processing means 236,” which can both be configured by, for example, a microprocessor. *Id*. at 14:51–53; 17:32–34.

565. Arai further discloses that both “controlling means 170” and “image signal processing means 236” are connected to memory devices. Figure 7 depicts “controlling means 170” (outlined in red) having a memory device, *i.e.*, “process information storing means 228” (outlined in blue). *Id*. at 16:6-10; 16:41–44. Moreover, a microprocessor such as “controlling means 170” that has the functions described in Arai would necessary have a memory device associated with it because the microprocessor has to store a series of commands for moving the X-ray equipment depending on the imaging mode selected.

FIG. 7

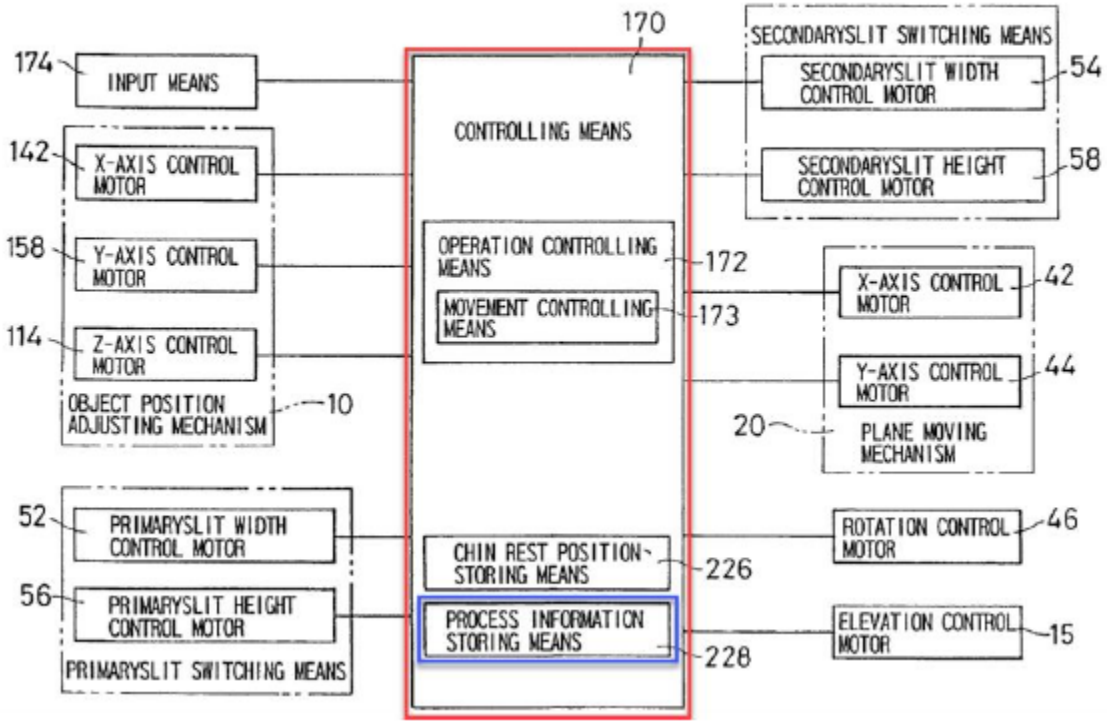

566. Figure 9 depicts “image signal processing means 236” (outlined in red) having memory devices in the forms of “frame memory 240,” “image memory for arithmetic 241,” and “external storing means 246” for storing tomographic images (all outlined in blue). Again, a microprocessor such as “image signal processing means 236” that has the functions described in Arai would necessary have a memory device associated with it because the microprocessor has to store and process sets of image information to generate a tomographic image.

FIG. 9

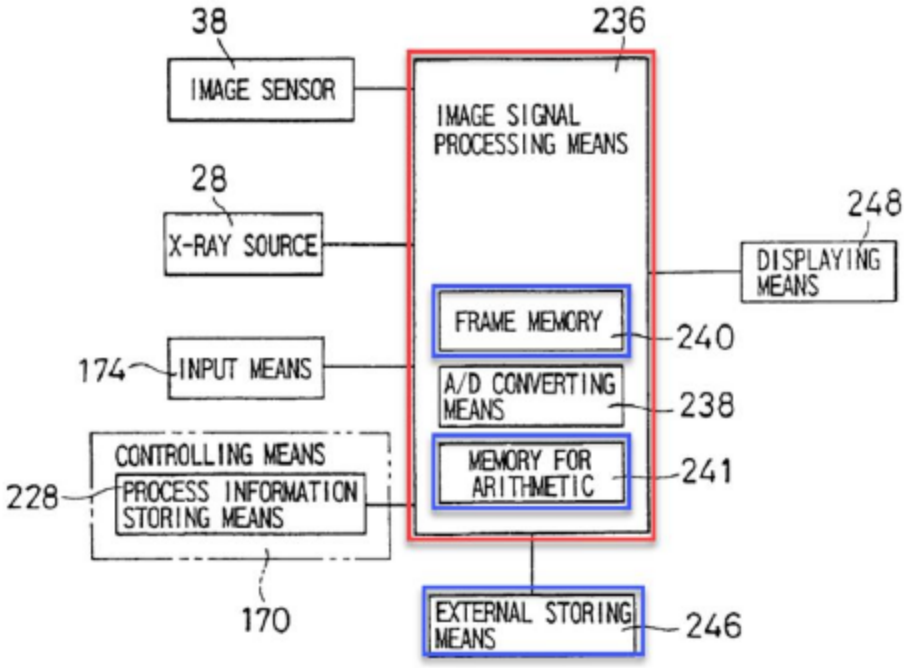

567. I have been informed by counsel that the claim element "storing patient densitometry information" is not limiting because it is a statement of intended use. Nonetheless, if it is limiting, Arai's "image signal processing means 236" stores patient information: "Plural sets of image information stored in the frame memory 240 are stored in the image memory for arithmetic 241. A predetermined arithmetic process corresponding to the selected imaging mode is conducted on image information read out from the image memory for arithmetic 241, thereby generating a tomographic image of the selected mode." *Id*. A POSA reading this disclosure would understand that both the "frame memory 240" and "memory for arithmetic 241" stores patient information, because said information

has to be stored in the microprocessor in order for it to be used to generate a tomographic model. Further, Arai discloses "external storing means 246" for storing a tomographic image, which a POSA would understand to be patient information. *Id*. at 18:11–12.

568. A POSA would further understand that this information is densitometry information. Arai's CT system involves "image sensor 38" receiving X-rays that pass through the target tissue. *Id*. at 10:47–49 ("X-rays having passed through the object are detected by the image sensor 38"). As previously discussed in Section V.H, X-ray attenuation is dependent on density, among other things. Thus, the attenuated X-rays detected by "image sensor 38" represent densitometry of the patient's dental structure. These signals are then passed from "image sensor 38" to the "A/D converting means 238," which turns them into digital signals. *Id*. at 17:38–41. These digital signals are then stored in "frame memory 240," and plural sets of the information in "frame memory 240" are stored in "memory for arithmetic 241" which runs a predetermined arithmetic process to generate a tomographic model of the selected mode. *Id*. at 17:42–48.

569. Alternatively, as discussed for the preamble, Cann teaches the use of CT imaging for quantitatively measuring bone mineral content, and it would have been obvious to a POSA to use the CT system of Arai to conduct the quantitative densitometry measurements disclosed in Cann. *See* § XIII.C.1.a. In using the CT

system in Arai to conduct the quantitative densitometry measurements in Cann, it would have been obvious to a POSA that the patient information stored in Arai's "frame memory 240" and "memory for arithmetic 241" would be densitometry information.

570. Arai discloses "input means 174" and "operation panel 176," which can be used by the operator to choose the imaging mode and input information relating to the object to be imaged. *Id*. at 14:51–56 ("The controlling means 170 may be configured by, for example, a microprocessor, and controls the motors on the basis of a signal supplied from input means 174, as described later. In the embodiment, the input means 174 comprises an operation panel 176 which is shown in FIG.8."); *see also* 16:10–14 ("The imaging position is determined in accordance with the imaging mode which is selected by the switches 180 and 182 which are disposed on the operation panel 176 (FIG. 8) and used for selecting the imaging mode."); 20:63–21:6 ("As described above, the positioning of the chin rest 12 is conducted by pressing the switches 186 to 210 of the operation panel 176, and by, if necessary, further pressing the switches 212 to 222. When the switches 186 to 210 are pressed to input information relating to the size of the object and the imaging site of the partial CT imaging, position information corresponding to the input information is read out from the object position information stored in the chin rest position storing means 226 of the controlling means 170."); FIG. 7 (depicting

"input means 174"); FIG. 8 (depicting "operational panel 176"); FIG. 9 (depicting "input means 174").

571. Arai teaches that "external storing means 246" and "displaying means 248" are output devices adapted for receiving a tomographic model from the microprocessor of "image signal processing means 236." *See id.* at 18:3–15; Figures 8 and 9.

c. "a dental or orthopedic input device including an energy source and an energy sensor; said source and said sensor being placed with at least a portion of the patient's dental or orthopedic structure therebetween"

572. The system in Arai includes an "X-ray source 28" and "image sensor 38." *Id*. at 2:15–18. A POSA understands that an "image sensor" is the same thing as an energy sensor, as the "image sensor" detects the X-rays that pass through the object of interest. *Id*. at 10:47–49. Arai also teaches that a portion of the patient's dental or orthopedic structure is placed in between "X-ray source 28" and "image sensor 38" as is evident from Figure 2 (illustrating the patient structure outlined in blue between the X-ray equipment outlined in red).

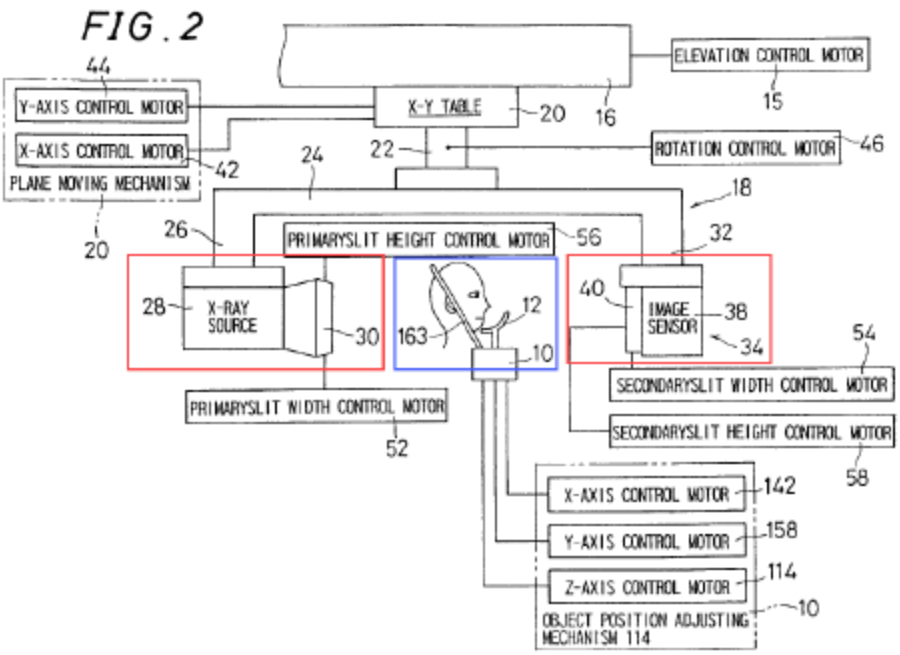

d. "said sensor transferring signals to the computer input"

573. Arai teaches that "image sensor 38" transfers signals to the "image signal processing means 236," which can be configured by a microprocessor. *Id.* at 17:30–34 ("Referring to FIG. 9, the image signal output from the image sensor 38 is supplied to image signal processing means 236. The image signal processing means 236 may be configured by, for example, a microprocessor for image processing."). Thus Arai teaches transferring signals to the computer input.

FIG. 9

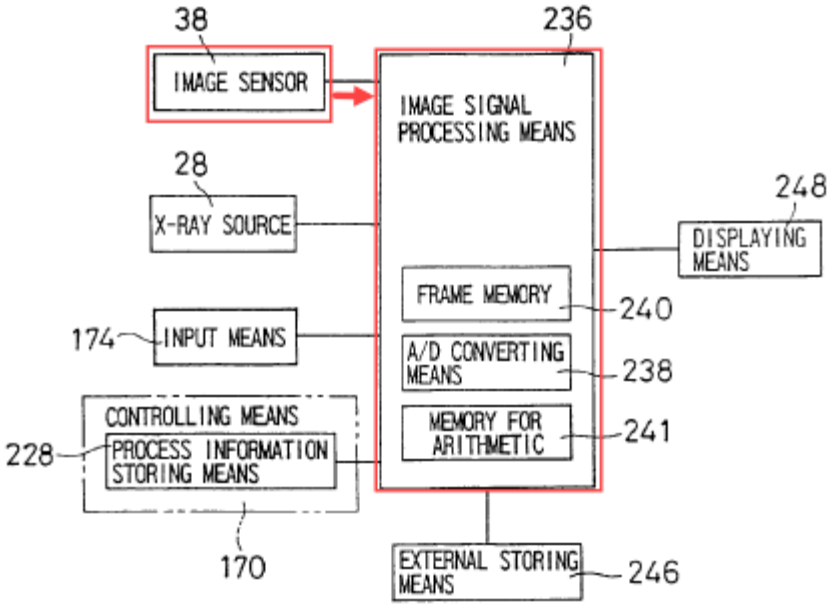

e. "said signals representing densitometry of the patient's dental or orthopedic structure"

574. Arai teaches that these signals are those of the "densitometry of the patient's dental or orthopedic structure." As discussed for the preamble of claim 1, Arai's CT system is quantitative and generates density information because X-ray attenuation is dependent upon, among other things, density. *See* § XIII.C.1.a. Arai's CT system takes multiple scans to generate a CT number, which a POSA understands contains information regarding density. *Id.*

575. In the alternative, Cann teaches the use of CT imaging for quantitatively measuring bone mineral content. Ex. 1014 at 493. It would have been obvious for a POSA to use Arai's CT system to perform the densitometry measurements disclosed in Cann for the reasons previously discussed in the

preamble. *See* § XIII.C.1.a. And in doing so, a POSA would recognize that the signals transferred from the "image sensor 38" of Arai into "image signal processing means 236" contains densitometry information of a patient's dental structure.

f. "said computer creating, storing and comparing three-dimensional digital densitometry models without the use of fiducial markers of patient dental or orthopedic structure"

576. This claim element recites five different limitations: (1) creating, (2) storing, (3) comparing (4) three-dimensional digital densitometry models (5) without the use of fiducial markers, which I address separately below.

577. **Creating:** Arai in view of Cann discloses the creation of densitometry models: "A predetermined arithmetic process corresponding to the selected imaging mode is conducted on image information read out from the image memory for arithmetic 241, thereby generating a tomographic image of the selected mode." *Id*. at 17:44–48; *see* § XIII.C.1.a.

578. **Storing:** Arai in view of Cann, discloses storing the densitometry models in "frame memory 240," "memory for arithmetic 241," and "external storing means 246." Ex. 1013 at 17:42–44 ("Plural sets of image information stored in the frame memory 240 are stored in the image memory for arithmetic 241"); 18:11–12 ("Furthermore, external storing means 246 for storing a tomographic image is disposed.").

579. **Comparing:** Arai and Cann in view of Xu and/or Milestone discloses the comparison of densitometry models. As an initial matter, the ’262 patent itself admits that comparing tomographic models was known in the prior art. Ex. 1003 at 2:23–25. And I understand Osseo has admitted at a hearing in the Delaware litigation that there existed commercially-available software capable of performing comparisons of tomographic models as of the priority dates of the ’262, ’301, and ’374 patents. Ex. 1012 (SJ Hearing Transcript) at 17:23–18:21.

580. Thus, it would have been obvious to use Arai to perform comparisons. *See* §§ XI.A.1.a, XI.A.6–7 (I discussed this in the analysis of the ’374 patent, and that analysis applies equally here. Therefore, I incorporate it by reference.) Arai teaches memory for storing CT tomographic model data, including “external storing means 246,” “frame memory 240,” and “memory for arithmetic 241” as discussed in the previous paragraph as well as a microprocessor—“image signal processing means 236”—for generating tomographic images.

581. Additionally, as I previously described in Section V.I, a POSA would understand that comparisons of medical image are routinely performed for diagnostic and care purposes. As of the priority date of the ’262 patent, it was well-known that a computer could be programmed with comparison software, as evident from my discussion of Xu in Section X.E and Milestone in Section X.F and for reasons discussed in Xu and Milestone. A POSA would thus be motivated

to and have had a reasonable expectation of success in adapting the microprocessor in Arai to perform comparisons between the tomographic models already stored in Arai.

582. **Three-dimensional digital densitometry models:** Arai discloses that the tomographic densitometry models created, stored, and compared are three-dimensional models. As previously discussed, I understand that this claim was construed consistent with its plain meaning. *See* §§ VI.A.4 and 5. Applying this construction, a POSA would understand that the tomographic images generated by the CT mode in Arai is 3D because Arai uses cone beam CT technology. Additionally, Arai discusses generating multiple datasets or "plural sets of image information" corresponding to multiple focal planes. These "plural sets of image information" are tomographic slices of the imaged region, which Arai further teaches are combined by "arithmetic 241," (software) to generate a tomographic model. And as previously discussed, combining tomographic slices to generate a 3D model is a routine aspect of CT imaging. Thus, a POSA reading Arai would understand that it generates 3D models or has the capacity to generate 3D models.

583. Moreover, the creation, storage, and comparison of three-dimensional models was obvious as of the priority date of the '262 patent. Osseo's counsel stated at a hearing in the Delaware litigation: "one of ordinary skill in the art would know, at the time of the invention, how to take datasets and make 3D models out

of them. It was known. We're not professing that that's the invention. It was known at the time, fairly well known by those of ordinary skill in the art how to make 3D models out of image datasets." Ex. 1012 (SJ Hearing Transcript) at 21:21–22:4. Furthermore, prior art such as Milestone disclosed the creation, storing, and comparison of three-dimensional models well before the priority date of the '262 patent. *See* § X.F. A POSA would have recognized that an advantage of a 3D model is the additional information it can provide medical professionals more information over a 2D model. Thus, a POSA would have been motivated to use the imaging system described in the Arai to create, store, and compare three-dimensional models, and had a reasonable expectation of success in doing so, as of the priority date of the '262 patent because such functions of a CT imaging system were commonplace.

584. **Without the use of fiducial markers:** As with the '262 patent, Arai does not disclose the use of fiducial markers. As discussed in Section VI.B.5, fiducial markers are X-ray attenuating markers placed on or within the structure to be imaged to serve as a reference point. They can be used to help align individual slices in a tomographic model but are not necessary for the creation, storage, or comparison of tomographic models with CT systems. And as previously discussed with Arai and Arai '439, *see* Section XI.A.8 (in the context of the '374 patent), absent any affirmative teaching regarding the use of fiducial markers, a POSA

would not read a reference as disclosing the use of fiducial markers. This analysis applies equally here, and I incorporate it by reference.

585. Alternatively, it would be obvious to a POSA to use the system disclosed in the Arai without a fiducial marker. A POSA would be motivated not to use fiducial markers in imaging systems such as that in Arai because the use of these markers add complexity and cost to the imaging studies and may not be needed in terms of the accuracy of the resulting model.

g. "an output device connected to said computer output and communicating densitometry model comparison information"

586. Arai teaches an output device in the form of "displaying means 248" that communicates densitometry model comparison information. Ex. 1013 at 18:3–8 ("The signal of the tomographic image (the partial CT image or panoramic tomographic image) generated by the image signal processing means 236 is supplied to displaying means 248 as tomographic image information."). Arai further teaches that "displaying means 248" is connected to "image signal processing means 236," which can be configured by a microprocessor. *Id*. at 17:32–33.

587. I have been informed by counsel that the claim element "communicating densitometry model comparison information" is a non-limiting statement of intended use. Nevertheless, I have been asked to evaluate whether the

Arai discloses this limitation in the event that it is limiting. I conclude that the Arai does disclose this limitation, and in the alternative, that it would have been obvious to a POSA to use the same output devices that Arai teaches communicates densitometry models to communicate model comparison information. As I explained above in Section XIII.C.f, Arai and Cann in view of Xu and/or Milestone, discloses the comparison of densitometry models, and such comparison would have been commonplace in medicine. For such information to be of use to a medical professional, it has to be communicated to them via some type of output device. Arai discloses "display means 248." In the alternative, it would be obvious to a POSA to use the same output devices that communicate densitometry models as described above to also communicate model comparison information because these sets of information are similar.

h. "imaging software associated with said computer; and"

588. Arai discloses the use of imaging software associated with "image signal processing means 236," which can be configured by a microprocessor. Arai teaches that a "predetermined arithmetic process corresponding to the selected imaging mode is conducted on image information read out from the image memory for arithmetic 241, thereby generating a tomographic image of the selected mode." *Id*. at 17:44–48. A POSA would understand this "predetermined arithmetic process" to be software.

i. "a display associated with said output device and displaying information pertaining to said densitometry model"

589. Arai discloses a display associated with said output device that displays information pertaining to a densitometry model. *See* § XI.A.1.g.

2. Claim 2

590. Claim 2, which depends from claim 1, further recites: "wherein said source is external."

591. It is my opinion that Arai discloses this limitation. My opinions regarding claim 1 are incorporated by reference. It is also my opinion that Arai in combination with Cann, and in further combination with Xu and/or Milestone, renders obvious claim 2. I discuss with respect to claim 1 why a POSA would be motivated to combine and with a reasonable expectation of success Arai and Cann as well as Arai and Xu and/or Milestone. *See* XIII.C.1; *see also* §§ XI.A.1.a, XI.A.6 (in the context of the '374 patent).

592. As evident from Figure 2 of Arai, "X-ray source 28" (outlined in blue) is external to the patient (outlined in red).

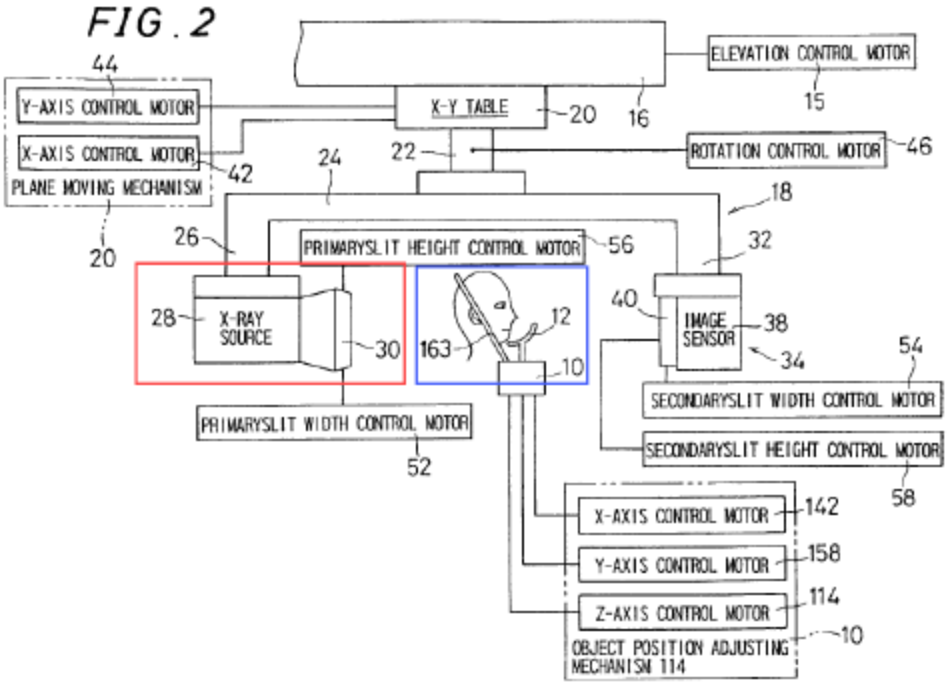

See also Figs. 1 and 26.

3. Claim 4

593. Claim 4, which depends from claim 1, further recites: "wherein said sensor is external."

594. It is my opinion that Arai discloses this limitation. My opinions about claim 1 are incorporated by reference. It is also my opinion that Arai in combination with Cann, and in further combination with Xu and/or Milestone, renders obvious claim 4. I discuss with respect to claim 1 why a POSA would be motivated to combine and with a reasonable expectation of success Arai and Cann as well as Arai and Xu and/or Milestone. *See* XIII.C.1; *see also* §§ XI.A.1.a, XI.A.6 (in the context of the '374 patent).

595. As evident from Figure 2 of Arai, “image sensor 38” (outlined in red) is external to the patient (outlined in blue).

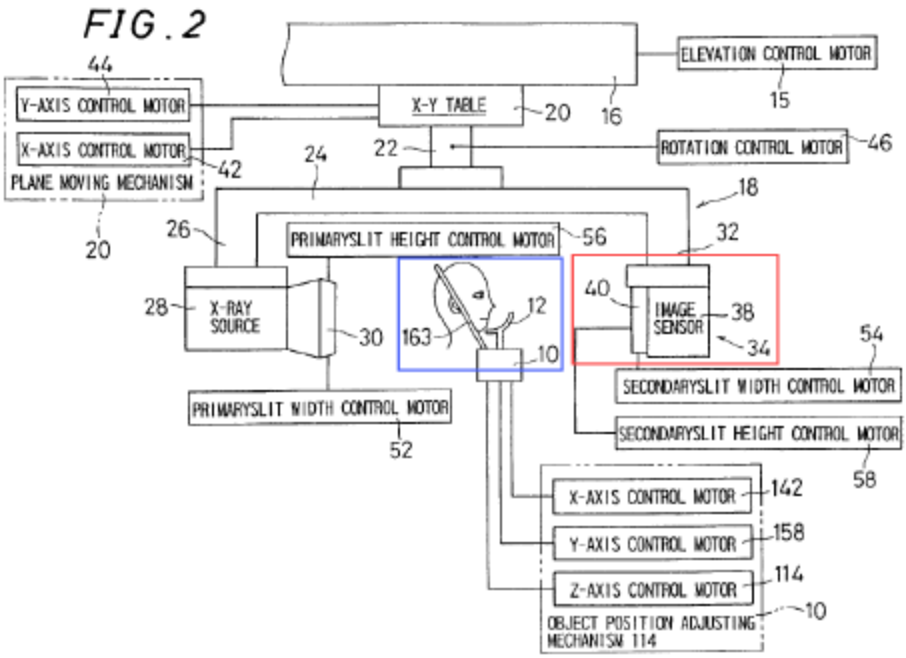

See also Figs. 1 and 26.

4. Claim 6

596. Claim 6, which depends from claim 1, further recites the imaging system “which includes: said energy being collimated.”

597. It is my opinion that Arai discloses this limitation. My opinions regarding claim 1 are incorporated by reference. It is also my opinion that Arai in combination with Cann, and in further combination with Xu and/or Milestone, renders obvious claim 6. I discuss with respect to claim 1 why a POSA would be motivated to combine and with a reasonable expectation of success Arai and Cann

as well as Arai Xu and/or Milestone. *See* XIII.C.1; *see also* §§ XI.A.1.a, XI.A.6 (in the context of the ’374 patent).

598. Arai discloses a collimated X-ray source: “The primary slit means 30 restricts the width and height of X-rays emitted from the X-ray source 28, thereby preventing unnecessary X-rays from being emitted toward the object.” Ex. 1013 at 10:44–47; 4:45–48 (“A seventh aspect of the invention is characterized in that, the apparatus further comprises primary slit means for restricting a range of X-rays emitted from the X-ray source toward the object . . .”).

599. Moreover, the U.S. Food and Drug Administration (FDA) required all imaging devices to use restricted beams well before the priority date. Ex. 1025 (21 C.F.R. § 1020.31, April 1998) at 566.

D. Pelc

600. It is my opinion that Pelc in combination with Cann, and in further combination with Xu and/or Milestone, renders obvious claim 1.

2. Claim 1

a. “A digital modeling system for creating dental or orthopedic models of patients, which system comprises”

601. I understand that there may be a legal dispute as to whether the preamble is limiting. I do not offer an opinion on the legal question of whether it is, or is not, limiting. To the extent it is limiting, Pelc in view of Cann, in further view of Xu and/or Milestone teach a digital modeling system for creating

orthopedic models of patients. *See* § X.B, C, E, F. I address motivation to combine and reasonable expectation of success with respect to these references in Sections XI.B.1.a and XI.B.6 (with respect to the ’374 patent). That analysis applies equally here, and I incorporate it by reference.

602. Pelc teaches “[a]n X-ray imaging system” that “provides both scanning radiography and computed tomography . . . .” Ex. 1015, Abstract. As Pelc describes his invention, it “relates generally to radiographic instruments and more particularly to a versatile instrument for either radiographic scanning or tomographic scanning of a patient for evaluation of bone density and bone morphology.” And Pelc further teaches that its CT modeling system is digital because an electronic computer is used to “reconstruct the stored attenuation measurements into a tomographic image.” *Id*. at claim 1(c).

603. Consistent with CT systems, which inherently provide quantitative information as previous described, Section V.H, the Pelc system teaches tomographic densitometry modeling. Pelc refers to “tomographic scanning of a patient for evaluation of bone density and bone morphology,” which the POSA would understand to refer to using CT to generate a quantitative densitometric model of the desired structure. Ex. 1015 at 1:15–17. Because CT systems assign a numerical value to each voxel within the image, and because that numerical value

is necessarily correlated to the density of the object, CT inherently provides quantitative densitometry information. *See* §§ V.H and I.

604. Alternatively, it would have been obvious to the POSA to combine Pelc's disclosure of a CT system with Cann's disclosure of quantitative densitometry. Cann teaches the use of CT imaging for quantitatively measuring bone mineral content. Ex. 1014 at 493. Both references relate to CT modeling and discuss densitometry. To the extent it is not already disclosed in Pelc, a POSA would therefore have been motivated to apply the quantitative densitometry measurements disclosed in Cann to the system of Pelc and would have had a reasonable expectation of success in doing so. *See* § XI.B.1.a. For the same reasons, incorporation of the quantitative CT system taught by Cann would not impact any of the combinations discussed below.

b. "a computer including a digital memory storing patient densitometry information, an input and an output"

605. Pelc discloses an "electronic computer" that "controls the C-arm, the radiation source, and the detector," Ex. 1015 at 5:31–32; *see also* Fig. 1; 9:34–10:2 ("Fig. 1 is a perspective view of the present invention showing a C-arm, having an x-ray source and a detector, and a table positioned for access by the patient and a controlling computer."); 16:18–22 ("The computer 56 also turns the radiation source 44 on and off and importantly collects digitized attenuation data from the

individual elements of the linear detector array 50 to generate an array of measured points (pixels) over the patient 14."); 18:10–12 (motor operated "under the control of computer"); 18:22–24 (same).

606. Pelc further discloses a memory device in the form of a "mass storage device" connected to the computer that "provides a means for storing . . . image data for future reference by the user." *Id.* at 36:1–3; *see* Fig. 19 (illustrating the connection between the computer and the mass storage device in red).

FIG. 19

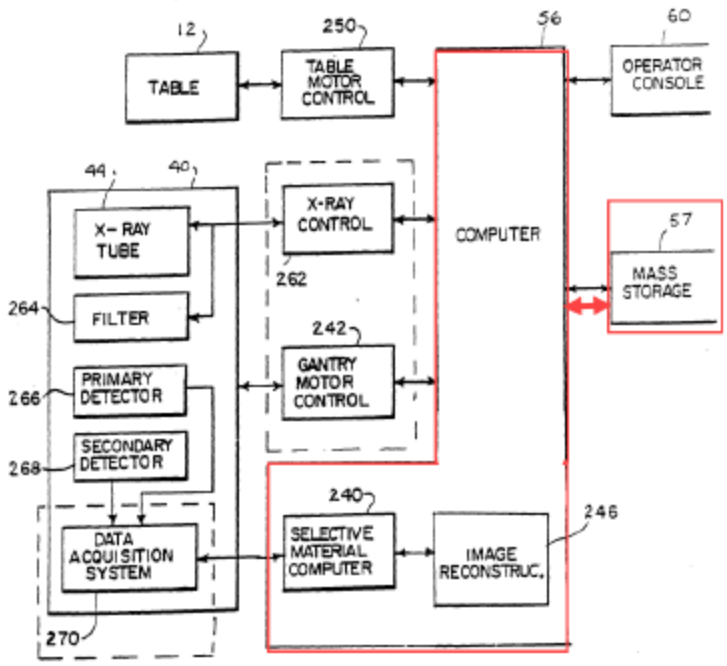

607. I understand that there may be a legal dispute as to whether the claim element "storing patient densitometry information" is limiting or is instead a non-limiting statement of intended purpose. To the extent that it is limiting, Pelc's "mass storage device 57" stores patient information. A POSA would understand

that the "attenuation measurements," *id*. at 3:32, and "image data," *id.* at 3, are patient densitometry information because (1) Pelc is a CT system, and CT systems are inherently quantitative, and (2) Pelc explicitly discloses densitometry.

608. Alternatively, as discussed for the preamble, Cann teaches the use of CT imaging for quantitatively measuring bone mineral content, and it would have been obvious to a POSA to use the CT system of Pelc to conduct the quantitative densitometry measurements disclosed in Cann. *See* §§ XI.B.1.a, XIII.D.1.a. In using the CT system in Pelc to conduct the quantitative densitometry measurements in Cann, it would have been obvious to a POSA that the patient information stored in "mass storage 57" would be densitometry information.

609. Pelc further teaches an input device ("keyboard 60") as well as an output device ("display terminal 58"): "Each of these actions of the C-arm 40, the slider 36 and the pallet 34 may be controlled by a computer 56 having a display terminal 58 and a keyboard 60 such as are well known in the art." Ex. 1015 at 16:7–10; *see also* 35:31–36 ("The computer 56 receives commands and scanning parameters via operator console 58 which is generally a CRT display and keyboard which allows the user to enter parameters for the scan and to display the reconstructed image and other information from the computer 56"); *Id*. at 4:17–20.

c. "a dental or orthopedic input device including an energy source and an energy sensor; said source and said sensor being placed with at least a portion of the patient's dental or orthopedic structure therebetween"

610. Pelc discloses "a radiation source and a detector" that are "affixed to the ends of the C-arm to provide energy attenuation measurements . . . ." *Id.* at 5:27–31. Additionally, Pelc discloses that this radiation source and sensor are positioned such that a portion of the patient's structure to be imaged is in between. This is depicted in Figure 18 of Pelc, reproduced below (radiation source highlights in green; detector highlighted in yellow; patient highlighted in red"):

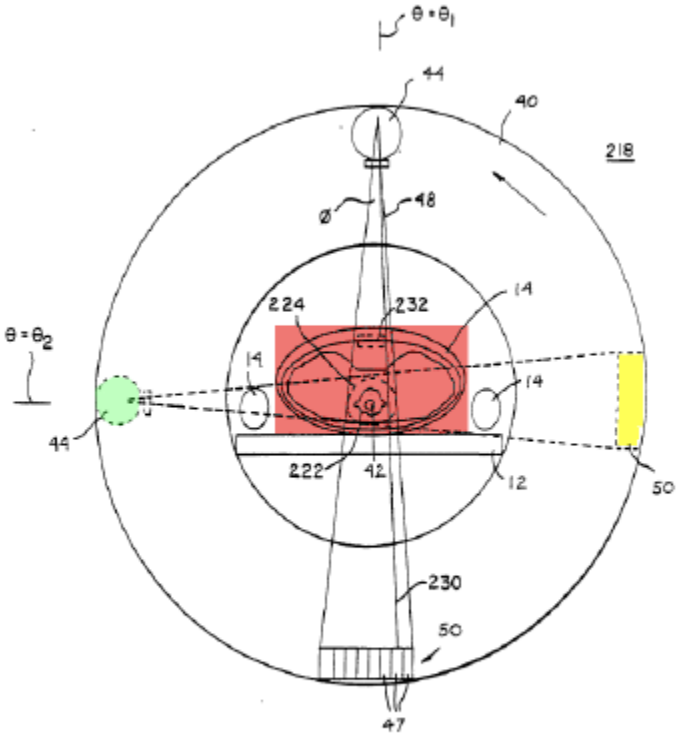

FIG. 18

See also id. at Figs. 1, 6, 15.

d. "said sensor transferring signals to the computer input"

611. Pelc discloses that "[a] radiation source and a detector are affixed to the ends of the C-arm to provide energy attenuation measurements along an axis between those ends at the plurality of angles, such measurements being received by an electronic computer. *Id*. at 5:27-31; *see also id*. at 35:3–8. ("After passing through the patient 14, the radiation is received by detector array 50 comprised of a number of detector elements 47 which together receive and detect radiation . . . to produce separate signals . . . for each detector element and for each energy of radiation.").

e. "said signals representing densitometry of the patient's dental or orthopedic structure"

612. Pelc teaches that these signals are those of the "densitometry of the patient's dental or orthopedic structure." As discussed for the preamble of claim 1, Pelc's CT system is quantitative and generates density information because X-ray attenuation is dependent upon, among other things, density, and because Pelc specifically discloses densitometry. *See* §§ XI.B.1.a, XIII.D.1.a. Pelc's CT system takes multiple scans to generate a CT number, which a POSA understands contains information regarding density. *Id*.

613. In the alternative Cann teaches the use of CT imaging for quantitatively measuring bone mineral content. Ex. 1014 at 493. It would have

been obvious for a POSA to use Pelc's CT system to perform the quantitative densitometry measurements disclosed in Cann for the reasons previously discussed in the preamble. *See* §§ XI.B.1.a, XIII.D.1.a. And in doing so, a POSA would recognize that the signals transferred from the radiation detector to the computer in Pelc necessarily contain densitometry information of a patient's dental structure.

f. "said computer creating, storing and comparing three-dimensional digital densitometry models without the use of fiducial markers of patient dental or orthopedic structure"

614. This claim element recites five different limitations: (1) creating, (2) storing, (3) comparing (4) three-dimensional digital densitometry models (5) without the use of fiducial markers, which I address separately below.

615. **Creating:** Pelc in view of Cann discloses the creation of densitometry models: "The present invention relates generally to radiographic instruments and more particularly to a versatile instrument for either radiographic scanning or tomographic scanning of a patient for evaluation of bone density and bone morphology." Ex. 1015 at 1:13–17; *see also* 5:34–6:1 ("The computer then reconstructs the stored attenuation measurements into a tomographic model"); *see* §§ XI.B.1.a, XIII.D.1.a.

616. **Storing:** Pelc in view of Cann discloses storing the densitometry models: "A mass storage device 57 provides a means for storing operating

programs for the CT imaging system, as well as image data for future reference by the user." Ex. 1015 at 36:1–3.

617. **Comparing:** Pelc and Cann in view of Xu and/or Milestone discloses the comparison of densitometry models. As an initial matter, the '262 patent itself admits that comparing tomographic models was known in the prior art. Ex. 1003 at 2:23–25. And I understand Osseo has admitted at a hearing in the Delaware litigation that there existed commercially available software capable of performing comparisons of tomographic models as of the priority dates of the '262, '301, and '374 patents. Ex. 1012 (SJ Hearing Transcript) at 17:23–18:21.

618. Thus, it would have been obvious to use Pelc to perform comparisons. Pelc teaches "mass storage device 57" for storing CT tomographic model data as discussed in the previous paragraph. Ex. 1015 at 36:1–3. Pelc also teaches this storage device provides a means of storing image data for future reference by the user. *Id*. A POSA would read Pelc's disclosure of storing image data for future reference to imply that one use of the image data is for comparison purposes. Moreover, a POSA would have had a reasonable expectation of success in adapting "computer 56" in Pelc to perform comparisons between the tomographic models already stored in Pelc. *See* §§ XI.B.6–7 (in the context of the '374 patent).

619. Additionally, as I previously described in Section V.I, a POSA would understand that comparisons of medical image are routinely performed for

diagnostic and care purposes. As of the priority date of the ’262 patent, it was well-known that a computer could be programmed with comparison software, as evident from my discussion of Xu in Section X.E and Milestone in Section X.F and for reasons discussed in Xu and Milestone.

620. **Three-dimensional digital densitometry models:** Pelc discloses that the tomographic densitometry models created, stored, and compared are three-dimensional models. Pelc discloses that “images obtained at any two gantry angles having sufficient separation to provide the necessary third dimensions of information.” *Id.* at 25:35–26:3. A POSA would understand this to disclose obtaining a dataset for creating 3D tomographic images.

621. Moreover, the creation, storage, and comparison of three-dimensional models was obvious as of the priority date of the ’262 patent. Osseo’s counsel stated at a hearing in the Delaware litigation:

> one of ordinary skill in the art would know, at the time of the invention, how to take datasets and make 3D models out of them. It was known. We’re not professing that that’s the invention. It was known at the time, fairly well known by those of ordinary skill in the art how to make 3D models out of image datasets.”

Ex. 1012 (SJ Hearing Transcript) at 21:21–22:4. Furthermore, prior art such as Milestone disclosed the creation, storing, and comparison of three-dimensional

models well before the priority date of the ’262 patent. *See* § X.F. A POSA would have recognized that an advantage of a 3D model is the additional information it can provide medical professionals over a 2D model.

622. Thus, a POSA would have been motivated to use the imaging system described in the Pelc to create, store, and compare three-dimensional models, and had a reasonable expectation of success in doing so, as of the priority date of the ’262 patent because such functions of a CT imaging system were commonplace.

623. **Without the use of fiducial markers:** As with the ’262 patent, Pelc does not disclose the use of fiducial markers. As discussed in Section VI.B.5, fiducial markers are X-ray attenuating markers placed on or within the structure to be imaged to serve as a reference point. They can be used to help align individual slices in a tomographic model but are not necessary for the creation, storage, or comparison of tomographic models with CT systems. And as previously discussed with Arai and Arai ’439, *see* Section VI.A.8, absent any affirmative teaching regarding the use of fiducial markers, a POSA would not read a reference as disclosing the use of fiducial markers.

624. Alternatively, it would be obvious to a POSA to use the system disclosed in the Pelc without a fiducial marker. A POSA would be motivated to not use fiducial markers in imaging systems such as that in Pelc because the use of

these markers add complexity and cost to the imaging studies and may not be needed in terms of the accuracy of the resulting model.

g. "an output device connected to said computer output and communicating densitometry model comparison information"

625. Pelc discloses a "display terminal 58," also called an "operator console 58," that communicates densitometry model comparison information. Ex. 1015 at 16:8–10; 35:31–36 ("The computer 56 receives commands and scanning parameters via operator console 58 which is generally a CRT display and keyboard which allows the user to enter parameters for the scan and to display the reconstructed image and other information from the computer 56.").

626. I understand that there may be a legal dispute as to whether the claim element "communicating densitometry model comparison information" is a non-limiting statement of intended use. I do not offer an opinion on the legal question of whether it is, or is not, limiting. To the extent that it is limiting, I have been asked to evaluate whether the Pelc discloses this limitation in the event that it is limiting. I conclude that the Pelc does disclose this limitation, and in the alternative, that it would have been obvious to a POSA to use the same output devices that Pelc teaches communicates densitometry models to communicate model comparison information. As I explained above in Section XIII.D.1.f, Pelc and Cann in view of Xu and/or Milestone, discloses the comparison of

densitometry models, and such comparison would have been commonplace in medicine. For such information to be of use to a medical professional, it has to be communicated to them via some type of output device. Pelc discloses "display terminal 58." In the alternative, it would be obvious to a POSA to use the same output device that communicate densitometry models as described above to also communicate model comparison information because these sets of information are similar.

h. "imaging software associated with said computer; and"

627. Pelc discloses that the "computer then reconstructs the stored attenuation measurements into a tomographic image." *Id*. at 5:35–6:1. A POSA would understand this disclosure to mean that there is software associated with Pelc's computer to allow it to perform this reconstruction, particularly in view of disclosure of known reconstruction algorithms in Pelc's background section. *Id*. at 4:14–17 ("The acquired tomographic projection set is typically stored in numerical form for computer processing to "reconstruct" a slice image according reconstruction algorithms known in the art.").

i. "a display associated with said output device and displaying information pertaining to said densitometry model"

628. Pelc discloses a display associated with said output device that displays information pertaining to a densitometry model. *See* § XII.B.1.h (in the context of the '301 patent).

3. Claim 2

629. Claim 2, which depends from claim 1, further recites: "wherein said source is external."

630. It is my opinion that Pelc discloses this limitation. My opinions regarding claim 1 are incorporated by reference. Accordingly, Pelc renders claim 2 obvious in combination with Cann, and in further combination with Xu and/or Milestone. I address motivation to combine and reasonable expectation of success with respect to these references in Sections XI.B.1.a and XI.B.6 (in the context of the '374 patent). That analysis applies equally here, and I incorporate it by reference.

631. As evident from Figure 15, the radiation source disclosed in Pelc is external to the patient. Ex. 1015 at Figure 15 (depicting an external radiation source 44, in red, in relation to the patient, in blue); *see also* Figures 1, 6, and 18.

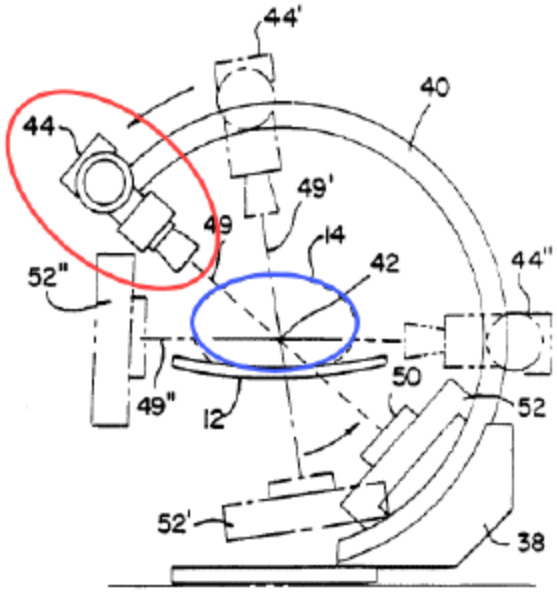

FIG. 15

4. Claim 4

632. Claim 4, which depends from claim 1, further recites: "wherein said sensor is external."

633. It is my opinion that Pelc discloses this limitation. My opinions regarding claim 1 are incorporated by reference. It is my opinion that Pelc in combination with Cann, and in further combination with Xu and/or Milestone, renders obvious claim 4. I address motivation to combine and reasonable expectation of success with respect to these references in Sections XI.B.1.a and XI.B.6 (in connection with the '374). That analysis applies equally here, and I incorporate it by reference.

634. As evident from Figure 15, the radiation sensor disclosed in Pelc is external to the patient. Ex. 1015 at Figure 15 (depicting linear detector array 50 in red in relation to the patient, in blue); *see also* Figs. 1, 6, and 18.

FIG. 15

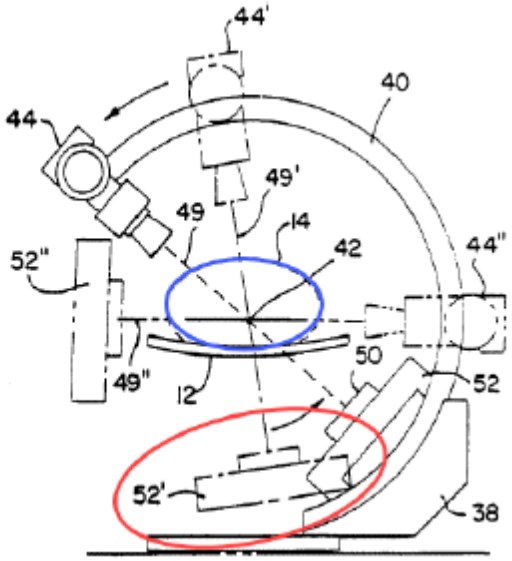

5. Claim 6

635. Claim 6, which depends from claim 1, further recites the imaging system "which includes: said energy being collimated."

636. It is my opinion that Pelc discloses this limitation. My opinions regarding claim 1 are incorporated by reference. It is my opinion that Pelc in combination with Cann, and in further combination with Xu and/or Milestone, renders obvious claim 6. I address motivation to combine and reasonable expectation of success with respect to these references in Sections XI.B.1.a and XI.B.6 (with respect to the '374 patent). That analysis applies equally here, and I incorporate it by reference.

637. Pelc teaches the use of a collimated radiation source. *Id*. at 14:24–26 ("The radiation source 44, which includes an x-ray tube together with filter and collimator as will be described in detail below . . ."); *see also id.* at 22:10-11 ("The slot collimator 68 incorporates a slot 71 defining the width and thickness of the fan beam 48 . . ."). Moreover, the U.S. Food and Drug Administration (FDA) required all imaging devices to use restricted beams well before the priority date. Ex. 1025 (21 C.F.R. § 1020.31, April 1998) at 566.

* * *

I hereby declare that all statements made herein of my own knowledge true and that all statements made on information and belief are believed to be true; and further that these statements were made with the knowledge that willful false statements and the like so made are punishable by fine or imprisonment, or both, under Section 1001 of Title 18 of the United States Code.

Dated: 3/24/2025

Dr.