UNITED STATES DISTRICT COURT
FOR THE DISTRICT OF DELAWARE

OSSEO IMAGING, LLC Plaintiff, v. PLANMECA USA, INC., Defendant.	§ § § § § § § § § § § §	C.A. No. 17-1386-LPS-CJB PATENT CASE JURY DEMAND

OPENING INVALIDITY EXPERT REPORT OF DR. NORBERT PELC

CONTAINS HIGHLY CONFIDENTIAL INFORMATION

Osseo 2008
U.S. Patent No. 6,944,262

TABLE OF CONTENTS

I. Introduction 1
II. Background/ Qualifications 1
III. Documents & Materials Considered 4
IV. Legal Principles 5
A. Invalidity 5
B. Anticipation and Obviousness 6
C. Presumption of Validity 11
D. Written Description and Enablement 12
E. Invalidity Under 35 U.S.C. § 101 13
F. Ensnarement 14
G. Inventorship 15
H. Claim Construction 15
I. Person of Ordinary Skill in the Art 18
V. Overview of The Patents-in-Suit 19
A. Asserted Claims of the ’301 Patent 22
B. Asserted Claims of the ’262 Patent 24
C. Asserted Claims of the ’374 Patent 25
VI. Admitted Prior Art 33
A. Admissions in the Specifications of the Patents-in-Suit 33
B. Admissions by the Inventor Ronald E. Massie 40
C. Admissions During Claim Construction 42
VII. X-rays, Densitometry and the State of the Art at the Priority Date of the Asserted Patents 42
VIII. Anticipation and/or Obviousness of the Asserted Claims Based on Specific Prior Art References 55
A. Webber 686 in Combination with Other Prior Art 55
1. Webber 686 55
2. Webber 686 and Other Prior Art Applied to the Asserted Claims of the Patents-in-Suit 55

CONTAINS HIGHLY CONFIDENTIAL INFORMATION

a) X-ray Equipment 56
b) Intraoral Source 58
c) Single Axis Rotation 58
d) Restricted Beam Device 59
e) Dual Energy 59
f) Cone Configuration 61
g) Input Device 63
h) Dental Input Device 65
i) Positioning Motor 65
j) Three Axes 66
k) Preprogrammed Scan Path 66
l) Convertor 67
m) Conversion Means 68
n) Merger Device 68
o) Controller 69
p) Computer 70
q) Imaging Software 70
r) Output Device 71
s) Display 71
t) Color Monitor 72
u) Color Printer 75
v) Densitometry 76
w) Tomographic Models 80
x) 3D 83
y) Controller Storing Preexisting/Current Models 83
z) Comparing Models 84
3. Summary Regarding Webber 686 84
B. Guenther 884 in Combination with Other Prior Art 85
1. Guenther 884 85

CONTAINS HIGHLY CONFIDENTIAL INFORMATION

2. Guenther 884 and Other Prior Art Applied to the Asserted Claims of the Patents-in-Suit 86
a) X-ray Equipment 86
b) Intraoral Source 87
c) Single Axis Rotation 88
d) Restricted Beam Device 88
e) Dual Energy 89
f) Cone Configuration 91
g) Input Device 92
h) Dental Input Device 94
i) Positioning Motor 96
j) Three Axes 97
k) Preprogrammed Scan Path 97
l) Convertor 98
m) Conversion Means 98
n) Merger Device 99
o) Controller 99
p) Computer 100
q) Imaging Software 101
r) Output Device 101
s) Display 103
t) Color Monitor 103
u) Color Printer 105
v) Densitometry 106
w) Tomographic Models 111
x) 3D 113
y) Controller Storing Preexisting/Current Models 115
z) Comparing Models 116
3. Summary Regarding Guenther 884 117
C. Mazess 445 in Combination with Other Prior Art 119

CONTAINS HIGHLY CONFIDENTIAL INFORMATION

1. Mazess 445 119
2. Mazess 445 and Other Prior Art Applied to the Asserted Claims of the Patents-in-Suit 120
a) X-ray Equipment 121
b) Intraoral Source 122
c) Single Axis Rotation 122
d) Restricted Beam Device 124
e) Dual Energy 125
f) Cone Configuration 125
g) Input Device 125
h) Dental Input Device 126
i) Positioning Motor 127
j) Three Axes 129
k) Preprogrammed Scan Path 131
l) Convertor 133
m) Conversion Means 134
n) Merger Device 134
o) Controller 135
p) Computer 136
q) Imaging Software 137
r) Output Device 137
s) Display 139
t) Color Monitor 139
u) Color Printer 141
v) Densitometry 142
w) Tomographic Models 142
x) 3D 145
y) Controller Storing Preexisting/Current Models 147
z) Comparing Models 148
3. Summary Regarding Mazess 445 148

CONTAINS HIGHLY CONFIDENTIAL INFORMATION

D. Brummer 302 in Combination with Other Prior Art 150
1. Brummer 302 150
2. Brummer 302 and Other Prior Art Applied to the Asserted Claims of the Patents-in-Suit 151
a) X-ray Equipment 151
b) Intraoral Source 153
c) Single Axis Rotation 153
d) Restricted Beam Device 155
e) Dual Energy 157
f) Cone Configuration 157
g) Input Device 159
h) Dental Input Device 160
i) Positioning Motor 160
j) Three Axes 162
k) Preprogrammed Scan Path 165
l) Convertor 166
m) Conversion Means 167
n) Merger Device 167
o) Controller 168
p) Computer 169
q) Imaging Software 170
r) Output Device 171
s) Display 171
t) Color Monitor 172
u) Color Printer 173
v) Densitometry 174
w) Tomographic Models 178
x) 3D 179
y) Controller Storing Preexisting/Current Models 179
z) Comparing Models 180

CONTAINS HIGHLY CONFIDENTIAL INFORMATION

3. Summary Regarding Brummer 302 181
E. Bisek 162 in Combination with Other Prior Art 183
1. Bisek 162 183
2. Bisek 162 and Other Prior Art Applied to the Asserted Claims of the Patents-in-Suit 184
a) X-ray Equipment 184
b) Single Axis Rotation 185
c) Restricted Beam Device 186
d) Dual Energy 186
e) Cone Configuration 186
f) Input Device 188
g) Positioning Motor 188
h) Three Axes 189
i) Preprogrammed Scan Path 190
j) Convertor 191
k) Conversion Means 191
l) Merger Device 192
m) Controller 194
n) Output Device 194
o) Color Monitor 195
p) Color Printer 196
q) Densitometry 197
r) Tomographic Models 198
s) 3D 201
t) Controller Storing Preexisting/Current Models 202
u) Comparing Models 203
3. Summary Regarding Bisek 162 203
F. Secondary Considerations 204
IX. Lack of Evidence in the Specification to Convey Possession of the Claimed Invention or Provide Enablement 204

CONTAINS HIGHLY CONFIDENTIAL INFORMATION

X. Inventorship 212
XI. Invalidity Under 35 U.S.C. § 101 215
XII. Ensnarement 219
A. "Densitometry" and "Tomographic Modeling" Claim Constructions.....220
B. Capture of Admitted Prior Art.....223
C. Assertion of the Doctrine of Equivalents Would Ensnare the Admitted Prior Art 224
XIII. Trial Exhibits 224
XIV. Supplementation 225
XV. Conclusion 225

CONTAINS HIGHLY CONFIDENTIAL INFORMATION

I. Introduction

1. I have been engaged as an expert witness on behalf of Defendant Planmeca USA, Inc. ("Planmeca") in the above-titled case to render opinions and/or expert testimony, including regarding the validity of U.S. Patent No. 6,381,301 ("the '301 patent"), U.S. Patent No. 6,944,262 ("the '262 patent"), and U.S. Patent No. 8,498,374 ("the '374 patent") (collectively, the "Patents-in-Suit").

2. With respect to this engagement I am being compensated for my time at my usual rate of $575 per hour for my study and testimony in this case. I am also being reimbursed for reasonable and customary expenses associated with my work and testimony in this case. My compensation is not contingent upon my opinions or the outcome of the case.

II. Background/ Qualifications

3. My Curriculum Vitae ("CV") is submitted herewith as **Exhibit 1.** Attached to my CV is a list of total publications I've authored, including those I've authored within the past ten years. Also attached to my CV is a list of cases in which I've testified either at trial, through written testimony, or by deposition, including those I've been involved with in the past four years.

4. I am a Professor of Bioengineering and Radiology at Stanford University in Stanford, California.

CONTAINS HIGHLY CONFIDENTIAL INFORMATION

5. In 1974, I received my B.S. in Applied Mathematics, Engineering and Physics from the University of Wisconsin and I started my graduate studies at Harvard University. While a student at Harvard, I was a research assistant at the Massachusetts General Hospital ("MGH"). I received my S.M. in Medical Radiological Physics in 1976 and my Sc.D. in Medical Radiological Physics in 1979, both from Harvard University.

6. I have worked in diagnostic imaging for more than 40 years. From 1978 until 1990 I worked at GE Medical Systems as a Senior Physicist in the Radiological Sciences Laboratory, and as the manager of that group. While at GE, I contributed to the development of Computed Tomography (CT), Digital Radiography, including dual energy x-ray imaging, Magnetic Resonance Imaging (MRI), and other advanced diagnostic imaging devices, and I collaborated with radiologists at leading medical centers on the development of new applications of these technologies.

7. I joined Stanford University as an Associate Professor of Radiology in 1990 and became a Professor of Radiology in 1997, a position I still hold. In 2002, I was named the Associate Chair for Research in the Department of Radiology. In 2004, I was appointed Professor of Bioengineering, a position I still hold. In 2012, I was named the Chair of the Department of Bioengineering and gave up the position of Associate Chair of the Department of Radiology. I completed my term as Chair of Bioengineering in 2017.

CONTAINS HIGHLY CONFIDENTIAL INFORMATION

8. I am named as an author on more than 210 published peer-reviewed journal articles and over 350 research papers presented at scientific conferences. I am also named as an inventor on 95 issued US Patents. Among these are contributions related to dual energy imaging, tomographic imaging, and bone densitometry. I was elected to the National Academy of Engineering in 2012. In 2016, I received an Honorary Doctor of Medicine from Friedrich Alexander University of Erlangen-Nuremberg. I received the Edith H. Quimby Award from the AAPM and the Outstanding Researcher Award from the Radiological Society of North America (RSNA), both in 2013. I am a Fellow of the American Association of Physicists in Medicine (AAPM), the International Society for Magnetic Resonance in Medicine, the Institute for Medical and Biological Engineering, and of the SPIE-The International Society for Optical Engineering.

9. My experience in technology related to the present case began while I was an undergraduate student at the University of Wisconsin. I was a research assistant in the Bone Mineral Laboratory under the supervision of Professor Richard Mazess (inventor of multiple patents discussed below) and worked on dual energy absorptiometry for the measurement of bone mineral density and tissue composition (*see* book chapter #1 in my CV). Later, as a scientist at GE, I worked on dual energy imaging with x-ray sources. Among the outcomes of this work was the construction of a dual energy imaging system (*see*, for example, papers #8, 14 and 15 and patent

CONTAINS HIGHLY CONFIDENTIAL INFORMATION

#1 in my CV). The system was used for many research studies, including bone densitometry (*see* Sartoris *et al.*, AJR, vol. 144, pp 605–611, 1985). In recognition of my expertise in bone densitometry I was asked by the American Association of Physicists in Medicine to participate in the Task Group on Bone Mineral Measurement. Three-dimensional, or tomographic imaging, especially with x-rays (Computed Tomography), and dual energy or spectral imaging have been a central focus of my career. Relevant publications and patents appear throughout my CV.

III. Documents & Materials Considered

10. I have considered the materials cited in this report. **Exhibit 2** contains a list of additional materials I have considered in rendering my opinions expressed herein. In forming my opinions, I have also relied on my experience and education.

11. It is my understanding that the case is on-going and that new material may be discovered and/or presented to me during the remainder of this case. It is my further understanding that I may review such new material and provide supplemental analysis and/or opinions. Therefore, I reserve the right to update, revise, supplement, and/or amend the opinions stated herein as new material is discovered and/or presented to me. I further reserve the right to respond in rebuttal to any position taken by Osseo or its experts, including the right to opine that any claim limitation that Osseo may argue is not expressly disclosed in a prior art reference is necessarily present therein, would have been obvious to one of ordinary skill in the

CONTAINS HIGHLY CONFIDENTIAL INFORMATION

art, or is provided in combination with another prior art reference or references, including but not limited to those cited herein.

12. I also understand that Osseo has not yet submitted an expert report applying the Court's claim constructions on infringement in this case. I reserve the right to supplement this report to address any issues arising from Osseo's interpretation of the Court's claim constructions or Osseo's interpretation of any other claim terms in its analysis of how the asserted claims read on any accused products. This includes issues related to validity, including failure to comply with the written description or enablement requirements of 35 U.S.C. § 112.

IV. Legal Principles

13. I am not a patent attorney, and therefore I offer no opinions on patent law. However, I have been apprised of the legal standards for invalidity, including anticipation, obviousness, lack of written description, lack of enablement, ensnarement, and inventorship, and have applied those standards in reaching my conclusions.

A. Invalidity

14. I understand that an issued United States patent is presumed valid, and that a party challenging the validity of an issued United States patent bears the burden of proving invalidity by clear and convincing evidence. I further understand that each

CONTAINS HIGHLY CONFIDENTIAL INFORMATION

claim of a patent is considered separately and apart from the other claims when determining whether the claim is valid or infringed.

15. As explained to me, a determination of patent validity involves a two-step process. First, the claim language must be construed to determine its scope and meaning. I understand that the Court has issued constructions for certain claim terms and that I must apply the Court's constructions as to those terms. The second step requires comparing the construed claim language with the prior art to determine whether the claim is valid.

B. Anticipation and Obviousness

16. I further understand that a patent claim may be found invalid as anticipated if a single prior art reference discloses or includes all of the limitations of that claim, and does so in a way that enables one of ordinary skill in the art to make and use the invention. I understand that, in this context, a prior art reference may be a printed publication, including a patent, a product, or a service that predates the critical date of the patent, which is the earliest of the filing date of the patent or the date that the patent owner can prove conception and reduction to practice. I also understand that each claim limitation may be expressly or inherently present in a prior art reference and that, if the prior art necessarily functions in accordance with or includes a claim's limitation, then that prior art reference inherently discloses that limitation. I have relied on these understandings in expressing the opinions set forth herein.

CONTAINS HIGHLY CONFIDENTIAL INFORMATION

17. I understand that a single prior art reference anticipates a claimed invention only if it either expressly or inherently describes each and every element or limitation set forth in the claim. I further understand that, in determining whether a single prior art reference anticipates a patent claim, one should take into consideration not only what is expressly disclosed in the prior art reference, but what is also inherently present as a result of the practice of the system or method disclosed in the reference.

18. I understand that a claim element or limitation is inherently disclosed in a prior art reference when evidence makes clear that the missing descriptive matter is necessarily present in the prior art reference as would be recognized by persons of ordinary skill in the art. I also understand that accidental, unrecognized, or unappreciated prior art use of a claimed invention still renders the claimed invention invalid.

19. It is further my understanding that multiple prior art references may not be combined to show anticipation. However, one or more additional prior art references may be used to interpret an anticipating prior art reference to help explain what that reference teaches or discloses to one of ordinary skill in the art at the time of the invention. Anticipation may still be found from the anticipating prior art reference if these additional references make it clear that the missing descriptive matter in the patent claim is necessarily present in the allegedly anticipating reference.

CONTAINS HIGHLY CONFIDENTIAL INFORMATION

20. I also understand that a patent may be invalid even though the invention is not identically disclosed or described in a single prior art reference, as long as the differences between the subject matter sought to be patented and the prior art are such that the subject matter as a whole would have been obvious to a person having ordinary skill in the art. I understand the following factors should be considered to determine if the subject matter as a whole would have been obvious to a person of ordinary skill in the art: (1) the level of ordinary skill in the art at the time the invention was made; (2) the scope and content of the prior art; (3) the differences between the claimed invention and the prior art; and (4) so-called secondary considerations, including evidence of commercial success, long-felt but unsolved need, unsuccessful attempts by others in the field, copying of the claimed invention, unexpected and superior results, acceptance and praise by others, independent invention by others, and similar considerations.

21. I also understand that a claim that combines familiar elements according to known methods in the art is likely to be found obvious when it does nothing more than yield predictable results. One example of this is when a technique has been used to improve one product and a person of ordinary skill in the art would have recognized that the technique would improve similar products in the same way.

CONTAINS HIGHLY CONFIDENTIAL INFORMATION

22. I understand that "a person of ordinary skill in the art" is a hypothetical person of a particular level of skill in the art that will ultimately be determined in the case, who has full knowledge of all the pertinent prior art.

23. I understand that, for a claim to be rendered invalid based on obviousness, a person of ordinary skill in the art must naturally be led to the solution adopted in the claimed invention, or would naturally view that solution as an available alternative. I understand that obviousness may be based on a combination of prior art and the knowledge of one of ordinary skill in the art, and that an obviousness analysis may take into account the inferences and/or creative steps that a person of ordinary skill in the art would be expected to make when solving problems in the field.

24. I also understand that, whether a piece of prior art may be combined with other prior art or other information within the knowledge of one of ordinary skill, the following rationales may be used: (1) combining prior art elements according to known methods to yield predictable results; (2) simple substitution of one known element for another to obtain predictable results; (3) use of known techniques to improve similar devices, methods, or products in the same way; (4) applying a known technique to a known product, method, or device ready for improvement to yield predictable results; (5) it would have been obvious to try the combination of the prior art references (e.g., choosing from a finite number of identified, predictable solutions with a reasonable expectation of success); (6) known work in one field of

CONTAINS HIGHLY CONFIDENTIAL INFORMATION

endeavor that may prompt variations of it for use in either the same field or a different field based on design incentives or other market forces, if the variations would have been predictable to one of ordinary skill in the art; or (7) some teaching, suggestion, or motivation in the prior art that would have led one of ordinary skill in the art to modify the prior art reference or to combine teachings of prior art references to arrive at the claimed invention.

25. I further understand that, when a work is available in one field of endeavor, design incentives and/or other market forces may prompt variations of it in the same or other fields of endeavor. Moreover, if a person of ordinary skill can implement a predictable variation of the work, it is likely the claim is obvious.

26. I understand common sense is another factor that may be considered. For example, it is common sense that familiar items may have obvious uses beyond their primary purposes, and that a person of ordinary skill in the art would understand this and be able to fit the teachings of multiple patents or multiple prior art references together, like pieces of a puzzle.

27. I understand that the test for obviousness is what the combined teachings of the prior art references would have suggested, disclosed, or taught to one of ordinary skill in the art at the time the invention was made.

CONTAINS HIGHLY CONFIDENTIAL INFORMATION

28. I further understand that merely applying old technology in a new field without more is not sufficient for the novelty and non-obviousness requirements of patentability.

C. Presumption of Validity

29. I understand that an issued United States patent is presumed valid but that this presumption of validity is rebuttable and based, at least in part, on the presumption that the patent examiner adequately performed his or her role in determining whether the patent met all of the necessary requirements for patentability. One aspect of that examiner's role is to ensure that the patent claims are not anticipated or obvious. I also understand that prior art considered by the patent examiner is listed on the face of the patent.

30. I understand that crowded areas of art may make it difficult for an examiner to locate the most relevant art and that examiners have large workloads.

31. I understand that even when a prior art reference is cited on the face of a patent as being considered during prosecution that the examiner may not have relied on such reference in his or her analysis.

32. I likewise understand that, when a prior art reference is cited on the face of a patent as being considered during prosecution, such reference may still be used in litigation or subsequent administrative proceedings to invalidate a patent on

CONTAINS HIGHLY CONFIDENTIAL INFORMATION

anticipatory or obviousness grounds and that such prior art is not deemed to have any heightened presumption that it is not useful in such analyses.

D. Written Description and Enablement

33. I understand that in order to satisfy the written description requirement of 35 U.S.C. § 112, the specification must clearly allow persons of ordinary skill in the art to recognize that the inventor invented what is claimed. This fact-based inquiry depends on the nature of the claimed invention and the knowledge of one skilled in the art at the time an invention is made and a patent application filed. A description that merely renders the invention obvious does not satisfy the requirement.

34. I understand that in order to satisfy the enablement requirement of 35 U.S.C. § 112, the patent's specification must teach those skilled in the art how to make and use the full scope of the claimed invention without "undue experimentation." I understand that courts may take into account several factors when deciding whether undue experimentation is required, including: (1) the quantity of experimentation necessary; (2) the amount of direction or guidance presented in the specification; (3) the presence or absence of working examples; (4) the nature of the invention; (5) the state of the prior art; (6) the relative skill of those in the art; (7) the predictability or unpredictability of the art; and (8) the breadth of the claims.

CONTAINS HIGHLY CONFIDENTIAL INFORMATION

E. Invalidity Under 35 U.S.C. § 101

35. It is my understanding that the Patent Act at 35 U.S.C. § 101 broadly defines patent-eligible subject matter as "any new and useful process, machine, manufacture, or composition of matter, or any new and useful improvement thereof . . . ." It is further my understanding that the Supreme Court had identified three exclusions from the scope of § 101: laws of nature, physical phenomena, and abstract ideas.

36. I understand that these exceptions to patent eligibility are based in the Constitutional mandate to promote the progress of science and its objective of promoting innovation while ensuring that the basic tools of scientific and technological development—such as laws of nature, physical phenomena, and abstract ideas, remain open for all to use. It is my understanding that only new and inventive applications of laws of nature, physical phenomena, and abstract ideas are patent-eligible.

37. It is my understanding that in *Alice*, the Supreme Court outlined the difference between the exceptions to patent eligibility and patent-eligible subject matter:

> [I]n applying the § 101 exception, we must distinguish between patents that claim the 'buildin[g] block[s]' of human ingenuity and those that integrate the building blocks into something more, thereby 'transform[ing]' them into a patent-eligible invention. The former 'would risk disproportionately tying up the use of the underlying' ideas, and are therefore ineligible for patent protection. The latter pose no

CONTAINS HIGHLY CONFIDENTIAL INFORMATION

> comparable risk of pre-emption, and therefore remain eligible for the monopoly granted under out patent laws.

Alice Corp. v. CLS Bank Int'l, 134 S.Ct. 2347, 2354–55 (2014) (emphasis added).

38. I understand that following *Alice*, the courts have used a two-step analysis to determine whether patent claims are invalid under 35 U.S.C. § 101. First, one must determine whether the claims at issue are directed to one of the patent-ineligible concepts. Second, if the claims are directed to a patent-ineligible concept, it is my understanding that one then considers whether the claims include an element or combination of elements—an "inventive concept"—that ensures that the patent in practice amounts to "significantly more" than a patent on the ineligible idea itself. I understand that inquiry involves looking at claim limitations both individually and as a combination to determine whether the limitations transform the nature of the claim into a patent-eligible application of the concept. It is further my understanding that there must be additional features that are more than well-understood, routine conventional activity in order to satisfy the second step of the *Alice* inquiry.

F. Ensnarement

39. I understand that ensnarement is a legal limitation that bars a patentee from asserting the Doctrine of Equivalence to encompass, or "ensnare," the prior art. I further understand that the ensnarement inquiry is a separate and distinct inquiry

CONTAINS HIGHLY CONFIDENTIAL INFORMATION

from the jury's element-by-element analysis, and it has no bearing on the validity of an actual claim.

36. I also understand that the district court may consider other extrinsic evidence regarding: (1) the scope and content of the prior art; (2) the differences between the prior art and the claimed invention; (3) the level of ordinary skill in the art; and (4) any relevant secondary considerations in evaluating ensnarement.

37. I further understand that when conducting an ensnarement analysis, the Court will evaluate a hypothetical claim that encompasses the scope of the patentee's equivalency argument for the accused device to determine if it reads on the prior art, thereby, making the hypothetical claim invalid as anticipated or obvious.

G. Inventorship

40. It is my understanding that an inventor must contribute to the conception of the invention of at least one claim.

41. I understand that an inventor is one who actually conceived of the new and original means for accomplishing the overall desired goal that is the invention. I understand that inventorship is determined on a claim-by-claim basis.

H. Claim Construction

42. I understand that the Court had a claim construction hearing and issued a claim construction order (D.I. 46) construing certain claim terms. I will apply the Court's construction of the following claim terms:

CONTAINS HIGHLY CONFIDENTIAL INFORMATION

Claim Term(s)	Court's Construction	Applicable Asserted Claims
tomographically modeling/ tomographic model(s)/ tomographical model(s)	merging information from multiple tomographic scans of an object to produce a representation of the subject/ said representation depicting quantitative density differences of the object scanned, which is created by the microprocessor in the controller using densitometry from at least one focal plane	claims 1, 3, 6, 9, 12, 13, 15, 19 and 21 of the '374 patent; claim 1 of the '301 patent
tomographic dental/orthopedic densitometry model/ tomographical densitometry model	merging information from multiple tomographic scans of an object to produce a representation of the subject/ said representation depicting quantitative density differences of the object scanned, which is created by the microprocessor in the controller using densitometry from at least one focal plane	claims 1, 7, 9 of the '301 patent
densitometry	quantitatively calculated bone density	claims 1, 7, 8, and 9 of the '301 patent and claim 1 of the '262 patent
3D (digital) tomographic model(s)	no construction necessary	claims 3, 9, 13, and 21 of the '374 patent
three dimensional digital densitometry model	no construction necessary	claim 1 of the '262 patent
conversion means	Means-plus-function limitation Function: converting a signal from the detector array Structure: an analog-to-digital convertor	claim 1 of the '301 patent

CONTAINS HIGHLY CONFIDENTIAL INFORMATION

Claim Term(s)	Court's Construction	Applicable Asserted Claims
a controller	one or more controllers, no construction necessary for the term controller	claims 1, 6, 11, 12, 13, 15, 19, and 21 of the '374 patent, and claim 1 of the '301 patent
merger device	a device that merges digitized signals into a data output suitable for processing and analyzing by a microprocessor	claim 4 of the '301 patent
means for storing a preexisting tomographical dental/orthopedic densitometry model	Means-plus-function limitation Function: storing a pre-existing tomographical dental/orthopedic densitometry model Structure: computer memory	claim 1 of the '301 patent
An output device connected to said microprocessor and adapted for receiving a tomographic model/ tomographical densitometry model from said microprocessor	one or more output devices connected to said microprocessor and adapted for receiving a tomographic model/ tomographical densitometry model from said microprocessor	claim 1 of the '301 patent
comparing terms	No construction necessary	claims 13 and 21 of the '374 patent; claims 15 and 19 of the '374 patent; claim 1 of the '262 patent

CONTAINS HIGHLY CONFIDENTIAL INFORMATION

Claim Term(s)	Court's Construction	Applicable Asserted Claims
means for comparing said pre-existing tomographical densitometry model to a current tomographical densitometry model	indefinite means-plus-function limitation	claim 9 of the '301 patent
preexisting patient model/ current patient model	a pair of tomographic models obtained during different imaging sessions, the earlier or preexisting model for use as a baseline for comparing with a later or then current patient model	claims 6, 12, 15, and 19 of the '374 patent; claim 9 of the '301 patent
movable in response to from said microprocessor	movable in response to signals from said microprocessor	claim 1 of the '301 patent

43. For any other claim term for which the Court did not provide a construction, I have applied the plain meaning of such term in my analysis. I understand that the Court has not held any preamble limiting.

I. Person of Ordinary Skill in the Art

44. I understand that the following considerations are useful in determining the level of ordinary skill in the art with respect to a given patent: (a) the inventor's educational level; (b) the type of problems encountered in the art; (c) prior art solutions to those problems; (d) how rapidly innovations are made in the art; (e) the

CONTAINS HIGHLY CONFIDENTIAL INFORMATION

sophistication of the technology in the art; and (f) the educational level of those actively working in the field. A person of ordinary skill in the art with respect to the Patents-in-Suit would have a graduate degree in engineering or a physical science with experience in densitometry and/or tomographic imaging, or an undergraduate degree in engineering of a physical science with at least five years of combined experience in densitometry and/or tomographic imaging.

45. Specifically, such a person would be familiar with x-ray generation and detection, computed tomography or x-ray tomosynthesis, and quantitative bone densitometry using x-rays.

46. By the claimed priority date of December 1999, I was at least a person of ordinary skill in the art, and regularly worked with and supervised others at that level of skill.

V. Overview of The Patents-in-Suit

47. The Patents-in-Suit include U.S. Patent No. 6,381,301 ("the '301 patent," D.I. 1-1), U.S. Patent No. 6,944,262 ("the '262 patent," D.I. 1-2), and U.S. Patent No. 8,498,374 ("the '374 patent," D.I. 1-3). The Patents-in-Suit are related to each other and Ronald E. Massie is the sole listed inventor on each one.

48. The application that led to the '301 patent was filed December 1, 1999 as U.S. Patent Application No. 09/452,348. The '301 patent is titled "Dental and Orthopedic Densitometry Modeling System and Method" and issued April 30, 2002.

CONTAINS HIGHLY CONFIDENTIAL INFORMATION

49. The application that led to the ’262 patent was filed January 24, 2003 as U.S. Patent Application No. 10/351,567. The ’262 patent is titled “Dental and Orthopedic Densitometry Modeling System and Method” and issued September 13, 2005. The ’262 patent claims priority as a continuation-in-part of application number 10/134,153, filed on April 27, 1992, which is a continuation of application number 09/452,348, filed December 1, 1999, which issued as the ’301 patent.

50. The application that led to the ’374 patent was filed September 14, 2012 as U.S. Patent Application No. 13/619,356. The ’374 patent is titled “Dental and Orthopedic Densitometry Modeling System and Method” and issued July 30, 2013. The ’374 patent claims priority as a continuation of application number 13/367,150, filed on February 6, 2012, and a continuation of application number 12/250,423, filed on October 13, 2008, which issued as U.S. Patent No. 8,126,112, which is a continuation-in-part of application number 11/932,809, filed on October 31, 2007 and issued as U.S. Patent No. 8,073,101, which is a continuation-in-part of application number 11/224,472, filed on September 12, 2005 and issued as U.S. Patent No. 7,839,970, which is a continuation of application number 10/134,153 filed on April 27, 2002 which was abandoned, which was a continuation of application number 09/452,348 filed December 1, 1999, which issued as the ’301 patent.

CONTAINS HIGHLY CONFIDENTIAL INFORMATION

51. The ’301 patent and the ’374 patent contain nearly identical specifications. The ’262 patent contains the same disclosure and the addition of material concerning using electron beam sources. Unless specifically indicated, all references to the specification of one of the Patents-in-Suit is intended to encompass the same disclosure from the other Patents-in-Suit.

52. The Abstract of the ’301 patent states:

> A dental and orthopedic densitometry modeling system includes a controller with a microprocessor and a memory device connected to the microprocessor. An input device is also connected to the microprocessor for inputting diagnostic procedure parameters and patient information, which may include a pre-existing densitometry model. X-ray equipment including an X-ray source and an X-ray detector array are connected to a positioning motor for movement relative to a patient's dental or orthopedic structure in response to signals from the microprocessor. The output consists of a tomographical densitometry model. A dental/orthopedic densitometry modeling method involves moving the X-ray equipment across a predetermined scan path, emitting dual-energy X-ray beams, and outputting an image color-coded to correspond to a patient's dental or orthopedic density.

53. The Abstract of the ’262 patent states:

> A dental or orthopedic densitometry modeling system includes a computer with a digital memory adapted for storing patient densitometry information, an input and an output. A dental or orthopedic input device includes energy source and an energy sensor, both of which can be either external or intraoral to the patient. The sensor transfers densitometry signals to the computer, which creates, stores and compares digital densitometry models. A densitometry modeling method includes the steps of creating a densitometry database consisting of dental or orthopedic information and obtaining current dental or orthopedic densitometry information from a patient. The

CONTAINS HIGHLY CONFIDENTIAL INFORMATION

current information is compared to the database, which can include the patient's previous densitometry models, and an updated patient densitometry model is created.

54. The Abstract of the ’374 patent states:

> A dental and orthopedic densitometry modeling system includes a controller with a microprocessor and a memory device connected to the microprocessor. An input device is also connected to the microprocessor for inputting diagnostic procedure parameters and patient information. X-ray equipment including an X-ray source and an X-ray detector array are connected to a positioning motor for movement relative to a patient's dental or orthopedic structure in response to signals from the microprocessor. The output consists of a tomographical densitometry model. A dental/orthopedic densitometry modeling method involves moving the X-ray equipment across a predetermined scan path, emitting dual-energy X-ray beams, and outputting an image color-coded to correspond to a patient’s dental or orthopedic density.

A. Asserted Claims of the ’301 Patent

55. I understand that Osseo has asserted infringement of claims 1–8 of the ’301 patent.

56. I further understand that in Osseo’s Final Infringement Contentions served January 22, 2019, Osseo withdrew its infringement allegation with respect to claim 9 of the ’301 patent based on the Court’s construction that the “means for comparing . . .” limitation is indefinite.

57. Asserted independent claim 1 of the ’301 patent claims (indicators added/replaced for reference):

CONTAINS HIGHLY CONFIDENTIAL INFORMATION

1. (a) A system for tomographically modeling dental and orthopedic structure densitometry, which includes:
(b) a controller with a microprocessor and a memory device connected to the microprocessor, said controller including means for storing a pre-existing tomographical dental/orthopedic densitometry model;
(c) an input device connected to the microprocessor;
(d) a positioning motor connected to the microprocessor and movable in response to [*signals*] from said microprocessor;
(e) X-ray equipment including an X-ray source and a detector array;
(f) conversion means for converting a signal from said detector array, said conversion means being connected to said detector array and to said microprocessor; and
(g) an output device connected to said microprocessor and adapted for receiving a tomographical densitometry model from said microprocessor.

58. Asserted dependent claim 2 of the ’301 patent claims:

2. The system according to claim 1 wherein said positioning motor is adapted for positioning said X-ray equipment with respect to three axes of movement.

59. Asserted dependent claim 3 of the ’301 patent claims:

3. The system according to claim 1 wherein said conversion means comprises an analog-to-digital convertor connected to said detector array.

60. Asserted dependent claim 4 of the ’301 patent claims:

4. The system according to claim 3 wherein said conversion means includes a merger device connected to said analog-to-digital converter and to said microprocessor.

61. Asserted dependent claim 5 of the ’301 patent claims:

5. The system according to claim 1 wherein said X-ray equipment comprises a dual energy level, restricted beam device.

62. Asserted dependent claim 6 of the ’301 patent claims:

CONTAINS HIGHLY CONFIDENTIAL INFORMATION

6. The system according to claim 1 which includes:
a) a preprogrammed scan path for said X-ray equipment, said scan path being programmed into said microprocessor.

63. Asserted dependent claim 7 of the ’301 patent claims:

7. The system according to claim 1 wherein said output device includes a color monitor adapted to receive said tomographical densitometry model output color-coded to represent densitometry.

64. Asserted dependent claim 8 of the ’301 patent claims:

8. The system according to claim 1 wherein said output device includes a color printer adapted to print images color-coded to correspond to the densitometry of said model.

B. Asserted Claims of the ’262 Patent

65. I understand that Osseo has asserted infringement of claims 1–4 and 6 of the ’262 patent.

66. Asserted independent claim 1 of the ’262 patent claims (indicators added for reference):

1. (a) A digital modeling system for creating dental or orthopedic models of patients, which system comprises:
(b) a computer including a digital memory storing patient densitometry information, an input and an output;
(c) a dental or orthopedic input device including an energy source and an energy sensor; said source and said sensor being placed with at least a portion of the patient’s dental or orthopedic structure therebetween;
(d) said sensor transferring signals to the computer input;
(e) said signals representing densitometry of the patient’s dental or orthopedic structure;
(f) said computer creating, storing and comparing three-dimensional digital densitometry models without the use of fiducial markers of patient dental or orthopedic structure;

CONTAINS HIGHLY CONFIDENTIAL INFORMATION

(g) an output device connected to said computer output and communicating densitometry model comparison information;
(h) imaging software associated with said computer; and
(i) a display associated with said output device and displaying information pertaining to said densitometry model.

67. Asserted dependent claim 2 of the ’262 patent claims:

2. The system according to claim 1 wherein said source is external.

68. Asserted dependent claim 3 of the ’262 patent[1] claims:

3. The system according to claim 1 wherein said source is intraoral.

69. Asserted dependent claim 4 of the ’262 patent claims:

4. The system according to claim 1 wherein said sensor is external.

70. Asserted dependent claim 6 of the ’262 patent claims:

6. The system according to claim 1, which includes: said energy being collimated.

C. Asserted Claims of the ’374 Patent

71. I understand that Osseo has claimed infringement of claims 1–4, 6–10, and 12–24 of the ’374 patent.

72. Asserted independent claim 1 of the ’374 patent claims (indicators added for reference):

1. (a) A system for tomographically modeling a dental structure, the system comprising:

[1] Although Osseo’s cover pleading alleges infringement of claim 3 of the ’262 patent, its infringement chart does not include claim 3. I include claim 3 here for purposes of completeness.

CONTAINS HIGHLY CONFIDENTIAL INFORMATION

(b) a controller with a microprocessor and a memory device connected to the microprocessor, said controller being adapted for storing computed tomographic models of a dental structure;
(c) an input device connected to the microprocessor;
(d) a positioning motor connected to the microprocessor and responsive to commands from said microprocessor;
(e) X-ray equipment including an X-ray source, a detector array, and a restricted beam device;
(f) a convertor for converting a signal from said detector array, said convertor being connected to said detector array and to said microprocessor; and
(g) an output device connected to said microprocessor and adapted for receiving a tomographic model from said microprocessor.

73. Asserted dependent claim 2 of the ’374 patent claims:

2. The system according to claim 1, wherein said restricted beam device comprises a dual-energy level restricted beam device.

74. Asserted dependent claim 3 of the ’ 374 patent claims:

3. The system according to claim 1, wherein said tomographic model received by said output device is a 3D tomographic model.

75. Asserted dependent claim 4 of the ’ 374 patent claims (indicators added for reference):

4. The system according to claim 1 wherein:
(a) said x-ray source travels along a single axis; and
(b) said x-ray source simultaneously rotates around said single axis.

76. Asserted dependent claim 6 of the ’374 patent claims (indicators added for reference):

6. The system according to claim 1, wherein:
(a) said controller is adapted for storing a first tomographic model and a second tomographic model;

CONTAINS HIGHLY CONFIDENTIAL INFORMATION

(b) said first tomographic model is a preexisting patient model;
(c) said second tomographic model is a current patient model;
and
(d) said controller is further adapted to compare said first tomographic model with said second tomographic model.

77. Asserted dependent claim 7 of the ’374 patent claims:

7. The system according to claim 1, wherein said X-ray source emits an X-ray beam comprising a cone configuration.

78. Asserted dependent claim 8 of the ’374 patent claims:

8. The system according to claim 7, wherein said restricted beam device comprises a dual-energy level restricted beam device.

79. Asserted dependent claim 9 of the ’374 patent claims:

9. The system according to claim 7, wherein said tomographic model received by said output device is a 3D tomographic model.

80. Asserted dependent claim 10 of the ’374 patent claims (indicators added for reference):

10. The system according to claim 7 wherein:
(a) said x-ray source travels along a single axis; and
(b) said x-ray source simultaneously rotates around said single axis.

81. Asserted dependent claim 12 of the ’374 patent claims (indicators added for reference):

12. The system according to claim 7, wherein:
(a) said controller is adapted for storing a first tomographic model and a second tomographic model;
(b) said first tomographic model is a preexisting patient model;
(c) said second tomographic model is a current patient model; and
(d) said controller is further adapted to compare said first tomographic model with said second tomographic model.

CONTAINS HIGHLY CONFIDENTIAL INFORMATION

82. Asserted independent claim 13 of the ’374 patent claims (indicators added for reference):

> 13. (a) A tomographic modeling system comprising:
> (b) a controller with a microprocessor and a memory device connected to the microprocessor, said controller being adapted for creating, storing, and comparing 3D digital tomographic models of an object without the use of fiducial markers of said object;
> (c) an input device connected to the microprocessor;
> (d) a positioning motor connected to the microprocessor and responsive to commands from said microprocessor;
> (e) x-ray equipment including an X-ray source, a detector array, and a restricted beam device;
> (f) a convertor for converting a signal from said detector array, said convertor being connected to said detector array and to said microprocessor; and
> (g) an output device connected to said microprocessor and adapted for receiving a tomographic model from said microprocessor.

83. Asserted dependent claim 14 of the ’374 patent claims:

> 14. The system according to claim 13, wherein said restricted beam device comprises a dual-energy level restricted beam device.

84. Asserted dependent claim 15 of the ’374 patent claims:

> 15. The system according to claim 13, wherein said controller is adapted to compare a pre-existing tomographic model with a current tomographic model.

85. Asserted dependent claim 16 of the ’374 patent claims (indicators added for reference):

> 16. The system according to claim 13, wherein:
> (a) said x-ray source travels along a single axis; and
> (b) said x-ray source simultaneously rotates around said single axis.

86. Asserted dependent claim 17 of the ’374 patent claims:

CONTAINS HIGHLY CONFIDENTIAL INFORMATION

17. The system according to claim 13, wherein said X-ray source emits an X-ray beam comprising a cone configuration.

87. Asserted dependent claim 18 of the ’374 patent claims:

18. The system according to claim 17, wherein said restricted beam device comprises a dual-energy level restricted beam device.

88. Asserted dependent claim 19 of the ’374 patent claims:

19. The system according to claim 17, wherein said controller is adapted to compare a pre-existing tomographic model with a current tomographic model.

89. Asserted dependent claim 20 of the ’374 patent claims (indicators added for reference):

20. The system according to claim 17, wherein:
(a) said x-ray source travels along a single axis; and
(b) said x-ray source simultaneously rotates around said single axis.

90. Asserted independent claim 21 of the ’374 patent claims (indicators added for reference):

21. (a) A system for tomographically modeling a dental structure, which system comprises:
(b) a controller with a microprocessor and a memory device connected to the microprocessor, said controller being adapted for creating, storing, and comparing 3D digital tomographic models of a dental structure without the use of fiducial markers of said dental structure;
(c) an input device connected to the microprocessor;
(d) a positioning motor connected to the microprocessor and responsive to commands from said microprocessor;
(e) x-ray equipment including an X-ray source, a detector array, and a restricted beam device;
(f) a convertor for converting a signal from said detector array, said convertor being connected to said detector array and to said microprocessor; and

CONTAINS HIGHLY CONFIDENTIAL INFORMATION

(g) an output device connected to said microprocessor and adapted for receiving a tomographic model from said microprocessor.

91. Asserted dependent claim 22 of the ’374 patent claims:

22. The system according to claim 21, wherein said restricted beam device comprises a dual-energy level restricted beam device.

92. Asserted dependent claim 23 of the ’374 patent claims:

23. The system according to claim 21, wherein said X-ray source emits an X-ray beam comprising a cone configuration.

93. Asserted dependent claim 24 of the ’262 patent claims:

24. The system according to claim 23, wherein said restricted beam device comprises a dual-energy level restricted beam device.

94. Several claim elements across the Patents-in-Suit are identical or nearly identical. For reference purposes, the following terms will be used to refer to each of the listed claim elements:

- X-ray Equipment (“x-ray equipment including an x-ray source and a detector array”): ’301 patent, claim element 1(e); ’374 patent, claim elements 1(e)(in part), 13(e)(in part), 21(e)(in part)
- Single Axis Rotation (“wherein the x-ray source travels along a single axis; and said x-ray source simultaneously rotates around said single axis”): ’374 patent, claim elements 4(a)–4(b), 10(a)–10(b), 16(a)–16(b), 20(a)–20(b)
- Restricted Beam Device (“restricted beam device”): ’301 patent, claim element 5 (in part); ’374 patent, claim elements 1(e)(in part), 13(e)(in part), 21(e)(in part)
- Dual Energy (“dual energy level, restricted beam device”): ’301 patent, claim element 5; ’374 patent, claim elements 2, 8, 14, 18, 22, 24

CONTAINS HIGHLY CONFIDENTIAL INFORMATION

- Cone Configuration ("wherein said x-ray source emits an x-ray beam comprising a cone configuration"): '374 patent, claim elements 7, 17, 23
- Input Device ("an input device connected to the microprocessor"): '301 patent claim element 1(c); '374 patent, claim elements 1(c), 13(c), 21(c)
- Dental Input Device ("a dental or orthopedic input device including an energy source and an energy sensor; said source and said sensor being placed with at least a portion of the patient's dental or orthopedic structure therebetween"): '262 patent, claim element 1(c)
- Positioning Motor ("a positioning motor connected to the microprocessor and movable in response to [*signals*/commands] from said microprocessor," "a positioning motor connected to the microprocessor and responsive to commands from said microprocessor"): '301 patent, claim element 1(d); '374 patent, claim elements 1(d), 13(d), 21(d)
- Three Axes ("wherein said positioning motor is adapted for positioning said x-ray equipment with respect to three axes of movement"): '301 patent, claim element 2
- Preprogrammed Scan Path ("a preprogrammed scan path for said X-ray equipment, said scan path being programmed into said microprocessor"): '301 patent, claim element 6
- Convertor ("convertor," "a convertor for converting a signal from said detector array, said convertor being connected to said detector array and to said microprocessor"): '301 patent, claim element 3 (in part); '374 patent, claim elements 1(f), 13(f), 21(f)
- Conversion Means ("conversion means for converting a signal from said detector array, said conversion means being connected to said detector array and to said microprocessor," "wherein said conversion means includes a merger device connected to said analog-to-digital converter and to said microprocessor"): '301 patent, claim elements 1, 4
- Merger Device ("merger device"): '301 patent, claim element 4 (in part)
- Controller ("a controller with a microprocessor and a memory device connected to the microprocessor . . ."): '301 patent, claim element 1(b); '374 patent, claim elements 1(b), 13(b), 21(b)

CONTAINS HIGHLY CONFIDENTIAL INFORMATION

- Computer ("a computer including a digital memory storing patient densitometry information, an input and an output"): '262 patent, claim element 1(b)(in part)
- Imaging Software ("imaging software associated with said computer"): '262 patent, claim element 1(h)
- Output Device ("an output device connected to said microprocessor and adapted for receiving a tomographic model from said microprocessor," "an output device connected to said computer output and communicating densitometry model comparison information"): '301 patent at claim element 1(g) (in part); '262 patent, claim element 1(g); '374 patent, claim elements 1(g), 13(g), 21(g)
- Display ("a display associated with said output device and displaying information pertaining to the densitometry model"): '262 patent, claim element 1(i)
- Color Monitor ("said output device includes a color monitor adapted to receive said tomographical densitometry model output color-coded to represent densitometry"): '301 patent, claim element 7
- Color Printer ("said output device includes a color printer adapted to print images color-coded to correspond to the densitometry of said model"): '301 patent, claim element 8
- Densitometry ("densitometry"): '301 patent, claim elements 1, 7, 8, 9; '262 patent, claim elements 1(f)(in part), 1(g)(in part), 1(i)(in part), and as it relates to Tomographic Models in the '374 patent
- Tomographic Models ("tomographically modeling," "tomographic model(s)," "tomographical model(s)," "tomographic dental/orthopedic densitometry model," "tomographical densitometry model"): '301 patent, claim elements 1(a)(in part), 1(b)(in part), 1(g)(in part), 7(in part); '374 patent, claim elements 1(b)(in part), 1(g)(in part), 3 (in part), 6(a)–6(d) (in part), 9 (in part), 12(a)–12(d)(in part), 13(b)(in part), 13(g)(in part), 15(in part), 19(in part), 21(b)(in part), 21(g)(in part)
- 3D ("3D," "three dimensional"): '262 patent, claim element 1(f)(in part); '374 patent, claim elements 3(in part), 9(in part), 13(b)(in part), 21(b)(in part)

CONTAINS HIGHLY CONFIDENTIAL INFORMATION

- Controller Storing Preexisting/Current Models ("said controller is adapted for storing a first tomographic model and a second tomographic model; said first tomographic model is a preexisting patient model; said second tomographic model is a current patient model; and said controller is further adapted to compare said first tomographic model with said second tomographic model") : '374 patent, claim elements 6(a)–6(d), 12(a)–12(d)
- Comparing Models ("adapted to compare a pre-existing tomographic model with a current tomographic model"): '374 patent, claim elements 15, 19

VI. Admitted Prior Art

A. Admissions in the Specifications of the Patents-in-Suit

95. In the Background of the Invention section, the Patents-in-Suit discuss the prior art technical concepts of tomography and densitometry.

96. With respect to tomography, the Patents-in-Suit admit "[t]omography or sectional radiography techniques using scanning X-ray beams have previously been employed for dental applications." '301 patent at 1:61–63. The Patents-in-Suit then incorporate five patents that "all relate to dental X-ray diagnosis utilizing scanning techniques," specifically, U.S. Patent Nos. 4,188,537 (PlanmecaPA000160–165); 4,259,583 (PlanmecaPA000148–159); 4,823,369 (PlanmecaPA000143–147); 4,856,038 (PlanmecaPA000135–142); and 5,214,686 (PlanmecaPA000120–134). '301 patent at 1:63–67.

97. With respect to densitometry, the Patents-in-Suit admit:

> In the medical field, densitometry procedures are used for measuring bone morphology density (BMD) by utilizing scanning X-ray beam

CONTAINS HIGHLY CONFIDENTIAL INFORMATION

> techniques. Examples are shown in U.S. Pat. No. 5,533,080; U.S. Pat. No. 5,838,765; and U.S. Pat. No. Re. 36,162, which are incorporated herein by reference. Medical applications of densitometry include the diagnosis and treatment of such bone diseases as osteoporosis.

'301 patent at 2:1–7.

98. The Patents-in-Suit also admit that the availability of fast computers with large memories had been adopted for use with x-ray images for mapping BMD models. '301 patent at 2:9–11. Specifically, the Patents-in-Suit note:

> . . . BMD images use color to identify varying densities. Digital BMD patient models are also used for comparison purposes with standard models and with the patient's own prior BMD histories. Age correction factors can be applied to patients' models for diagnosing and monitoring the onset and progress of such medical conditions such as osteoporosis and the like. The present invention utilizes such densitometry modeling and mapping techniques for dental applications.

'301 patent at 2:12–20.

99. Consistent with my understanding and experience, the Patents-in-Suit also make clear that certain equipment and techniques were well-known or conventional before the claimed priority date:

- Tomography equipment (*see* '301 patent at 3:10–11 (referring to commercially available tomography equipment));
- Densitometry equipment (*see* '301 patent at 3:18–20 ("providing such a method which can be practiced with relatively minor changes to existing densitometry equipment"));
- Dental x-ray equipment including fixed beam and scanning beam devices ('301 patent at 1:21–24, 4:20–23 (including incorporation by reference of the x-ray equipment disclosed in my '080 patent));

CONTAINS HIGHLY CONFIDENTIAL INFORMATION

- Controllers, microprocessors, and memory devices ('301 patent at 3:62–65);
- computer program-logic devices ('301 patent at 3:66–4:2);
- computer programming ('301 patent at 4:2–5);
- use of dual-energy x-ray beams ('301 patent at 5:12–15 (noting that the Bisek patent discloses the use of dual-energy densitometry);
- intraoral sensors such as CCD & CMOS devices, which output digital data (*see* '262 patent at 6:30–36);
- panoramic tomography (*see* '262 patent at 6:41–50); and
- electron beam sources including hand-held CRT devices (*see* '262 patent at 6:56–58).

100. I am the inventor on U.S. Patent No. 5,533,080 ("Pelc 080," PlanmecaPA000237–248), which is incorporated by reference into the specification of the Patents-in-Suit. Pelc 080 issued July 2, 1996 and, among other things, discloses that in CT systems, "an x-ray source is collimated to form a fan beam" that is transmitted through the object being imaged and detected with a detector array. Pelc 080 at 1:22–35. It also discloses that the x-ray source and detector array may be rotated on a gantry. Pelc 080 at 1:43–49. The rotation is accomplished using one or more positioning motors. After detection, the tomographic projection set is "typically stored in numerical form for computer processing to "reconstruct" a slice image according to reconstruction algorithms known in the art. The reconstructed slice images may be displayed on a conventional CRT tube or may be converted to a film record by means of a computer-controlled camera." Pelc 080 at 1:62–67.

CONTAINS HIGHLY CONFIDENTIAL INFORMATION

101. In Pelc 080, I described modifying a conventional CT machine to perform "a method for reducing the effect of external volumes on the reconstructed image and thus allowing the construction of a reduced field-of-view CT machine, in cases where the goal is to form an image of a compact structure whose attenuation properties differ from those of the rest of the section." Pelc 080 at 2:60–64. This method involves using dual-energy measurements. Pelc 080 at 4:62–6:51.

102. Pelc 080 further describes embodiments of dual-energy machines to perform such a method, including that such a machine may include control of the positioning motor(s), an x-ray tube as the external radiation source that produces a radiation beam whose spectral content can be altered by switching of the operating voltage of the tube and/or switching filtration and thereby enables dual energy measurements, an array of x-ray detectors that may comprise dual layer dual energy detectors, restricted beam, and a mass storage device that stores both the operating programs for the CT system and image data. Pelc 080 at 7:10–8:40; Figs. 2–5. Pelc 080 further describes that an embodiment might use a c-arm such that there is a plane of rotation enabling rotation of the detector array and x-ray source along a single axis. Pelc 080 at 10:3–9.

103. Because it is incorporated by reference into the specification of the Patents-in-Suit, the disclosures of Pelc 080 are further admissions that the Controller (e.g., computer 44), Computer (e.g., computer 44), Input Device (e.g., keyboard associated

CONTAINS HIGHLY CONFIDENTIAL INFORMATION

with operator console 52), Positioning Motor (e.g., table motor, which is responsible to commands by computer 44 by means of table motor controller 50), X-ray Equipment (e.g., radiation source 10 or x-ray tube 56, detector array 26), Restricted Beam Device (e.g., x-ray tube 56 with filter wheel 58 and x-ray control 62), Convertor (e.g., inherent where the acquired tomographic projection set is stored in numerical form for computer processing, data acquisition system 60), Output Device (e.g., display associated with operator console 52), Merger Device (inherent in data sets from dual energies in the data acquisition system 70), Dual Energy (e.g., measuring intensities at two different energies), Preprogrammed Scan Path (e.g., program of what gantry angles to acquire the projection sets at during gantry rotation), Display (e.g., display associated with operator console 52), and Single Axis Rotation (e.g., movement of the c-arm) limitations were known prior to the claimed priority date.

104. Pelc 080 further discloses use of a CRT display, which was known in the art to include a color display or color monitor. Pelc 080 at 8:5–10.

105. Another patent incorporated by reference into the specification of the Patents-in-Suit and therefore containing admissions of the state of the art at the time of the claimed priority date is U.S. Patent No. 5,838,765 to Gershman ("Gershman 765," PlanmecaPA000196–236), which issued November 17, 1998. While the Appendix

CONTAINS HIGHLY CONFIDENTIAL INFORMATION

listed in **Exhibit 3** specifically details the claim element disclosures of Gershman 765 (as well as other prior art references), I note certain claim elements below.

106. Gershman 765 specifically discusses that "[t]he system can use a merger responsive to outputs of the detector for scans of the first and second regions to merge detector outputs for positions of the fan beam which are spatially adjacent along the x-axis but are obtained at different times, into resulting merged detector outputs corresponding to detector outputs obtainable from a single fan beam having substantially twice the width of the fan beam emitted from the source." Gershman 765 at 2:48–55.

107. Gershman 765 also specifically describes using an analog-to-digital converter to digitize the signals from the detector so that the computer can process those signals into density representations and/or images. Gershman 765 at 8:41–49.

108. Gershman 765 further describes that one potential shape of the x-ray beam known in the prior art is a cone configuration. Gershman 765 at 1:44–46.

109. A number of the other patents incorporated by reference into the specification of the Patents-in-Suit are discussed in further detail below. Many of these demonstrate the same admissions regarding the state of the art of tomography and densitometry, including machines built to perform the same, as Pelc 080 and Gershman 765.

CONTAINS HIGHLY CONFIDENTIAL INFORMATION

110. One such reference, which is discussed in detail in section VII.A, is U.S. Patent No. 5,214,686 to Webber ("Webber 686," PlanmecaPA000120–134). For example, Webber discusses positioning the x-ray equipment in both the horizontal and vertical planes meaning that the x-ray equipment may be positioned with multiple axes of movement. Webber 686 at 7:33–48.

111. It is unclear from the Patents-in-Suit what, if any, hardware changes were made to conventional tomography and densitometry equipment to implement the claimed system. It is therefore my opinion that the following limitations of the Asserted Claims do not impart any novelty to the claims and were admittedly part of the prior art:

- '301 patent, claim elements 1(b) ("a controller with a microprocessor and a memory device"), 1(c), 1(d), 1(e), 1(f), 1(g) ("an output device connected to said microprocessor"), 2, 3, 4, 5, 6, 7, and 8;
- '262 patent, claim elements 1(b), 1(c), 1(d), 1(e), 1(g), 1(h), 1(i), 2, 3, 4, and 6; and
- '374 patent, claim elements 1(b) ("a controller with a microprocessor and a memory device connected to the microprocessor"), 1(c), 1(d), 1(e), 1(f), 1(g) ("an output device connected to said microprocessor"), 2, 4, 7, 8, 10(a)–10(b), 13(b) ("a controller with a microprocessor and a memory device connected to the microprocessor"), 13(c), 13(d), 13(e), 13(f), 13(d) "an output device connected to said microprocessor"), 14, 16(a)–16(b), 17, 18, 20(a)–20(b), 21(b) ("a controller with a microprocessor and a memory device"), 21(c), 21(d), 21(e), 21(f), and 21(g) ("an output device connected to said microprocessor").

CONTAINS HIGHLY CONFIDENTIAL INFORMATION

B. Admissions by the Inventor Ronald E. Massie

112. The sole named inventor of the Patents-in-Suit, Dr. Ronald E. Massie was deposed in this case and gave testimony regarding the state of the art and his knowledge prior to and at the time he filed the initial patent application, which ultimately led to the Patents-in-Suit. I have attached as **Exhibit 4** the transcript of Dr. Massie's deposition testimony in this case.

113. Dr. Massie made prior art admissions during his testimony, including specifically:

- Densitometry existed prior to his idea and was used at least for detecting the density and breakdown of bone, including in the medical field (Massie Tr. at 20:22–21:7; 22:15–23, 66:16–67:6);
- Tomography methods and computerized tomographic scans were known, including those that created 3D models, when he filed his 1999 patent application (Massie Tr. at 36:20–37:15);
- Comparison of a patient's past and present x-ray films was frequently done to look visually for changes (Massie Tr. at 68:10–21); and
- Panoramic radiographs existed prior to 1999 (Massie Tr. at 103:24–104:2);

114. Dr. Massie further admitted that at the time of his original idea, he had limited knowledge of densitometry and did not how to apply it in a dental application. Massie Tr. at 19:20–21:7; 22:15–25:11. Indeed, when questioned about how a dental application was different, Dr. Massie could not explain how his invention addressed the size of images and decalcification in a dental application. Massie Tr. at 25:12–26:11. Dr. Massie could not point to any discussion in the Patents-in-Suit

CONTAINS HIGHLY CONFIDENTIAL INFORMATION

regarding comparing differences in changing of bone density, Massie Tr. at 85:22–86:8, nor could Dr. Massie explain details regarding what "dual energy" meant in densitometry. Massie Tr. at 53:10–19.

115. Dr. Massie also admitted he did not and does not understand how computed tomography works, Massie Tr. at 61:8–62:5, 63:19–25, nor could Dr. Massie explain if there was any difference between computed tomographic models and tomographic models. Massie Tr. at 85:1–6. When questioned about his awareness regarding Hounsfield Units ("HUs"), which are scaled values of estimated linear attenuation coefficients in computed tomography, Dr. Massie said "I'm not an engineer so I would defer that to an expert." Massie Tr. at 89:11–14.

116. Dr. Massie further admitted that he was not familiar with digital imaging systems in 1999. Massie Tr. at 62:20–22.

117. Dr. Massie also could not answer the question "how does your invention describe looking for those changes" in relation to the required comparison. Massie Tr. at 71:3–16.

118. Dr. Massie could not explain what he meant by tomographical densitometry model or three-dimensional digital densitometry model at the time he filed his patent application, or whether there was anything different about storing a pre-existing tomographical dental/orthopedic densitometry model from storing a tomographic image. Massie Tr. at 73:13–74:10; 80:17–22.

CONTAINS HIGHLY CONFIDENTIAL INFORMATION

119. Dr. Massie further admitted that he draws no distinction between a 3D image and a 3D model. Massie Tr. at 83:10–14.

120. Dr. Massie also admitted that he had no knowledge of the Webber 686 patent, which was incorporated by reference into the specification of the Patents-in-Suit. Massie Tr. at 86:21–23.

121. Dr. Massie further admitted that he had a limited understanding of cone beam computed tomography ("CBCT") based on his use of a CBCT machine years after his patent was filed. Massie Tr. at 95:6–9.

C. Admissions During Claim Construction

122. During the claim construction hearing, counsel for Osseo made certain admissions regarding the scope of what Dr. Massie invented, or rather, did not invent. Specifically, counsel stated: "So Dr. Massie did not invent tomographic scanning. He did not invent densitometry. Those were preexisting technologies." August 27, 2018 Hearing Tr. at 7:13–15.

VII. X-rays, Densitometry and the State of the Art at the Priority Date of the Asserted Patents

123. In this Section, I provide an overview of the state of the art and technology background as of the priority date of the Asserted Patents. This is based on my personal knowledge. Where appropriate, I have made reference to articles or patents

CONTAINS HIGHLY CONFIDENTIAL INFORMATION

that evidence what technology was readily known to those of skill in the art at the time.

124. Bone densitometry is a specialized area of imaging that existed well before the priority date of the Patents-in-Suit. The main area of application motivating the development of quantitative bone densitometry was osteoporosis. Osteoporosis, affecting primarily the elderly, leads to weakening of bones and can eventually lead to bone fractures. It can cause severe problems to patients, including severe pain and loss of mobility. Bone tissue is in a balance between resorption of existing bone and deposition of new bone tissue. Osteoporosis may be due to overall loss of bone slowly over time leading to reduced bone density. Because the changes in bone mass over a finite period of time are very small and subtle, detection, monitoring, and prognosis of changes in bone density requires very high accuracy and precision not obtained by conventional x-ray imaging. As is explained below, measurements of bone density with x-rays can be inaccurate because of beam hardening, scatter, and other physical imperfections. This led to the development of specialized tools that circumvent these problems, as discussed below.

125. X-rays and gamma rays are a form of electromagnetic radiation, like visible light but with much shorter wavelength. For the purposes of our discussion, they behave like particles, called photons, and are characterized by their photon energy, which is inversely related to their wavelength. As they travel through materials, like

CONTAINS HIGHLY CONFIDENTIAL INFORMATION

human tissues, they can be absorbed, scattered (discussed below), or they penetrate (are transmitted) through the material. The rate at which they are removed from the beam by the material is characterized by the linear attenuation coefficient, which depends on the material and the photon energy. Generally, denser tissues, such as bone, attenuate photons more easily. The difference in transmission through different tissues also allows x-rays to be used for diagnostic imaging. Since fewer photons are transmitted through dense bone than through soft tissues we can see breaks in the bones or caries in teeth. The most commonly used imaging method using photons is radiography, the formal name for the technique that produces the images colloquially called "x-rays".

126. Photon transmission ("absorptiometry") was also recognized decades ago as providing the possibility that photons could be used to quantify bone density. Complicating the potential for bone densitometry based on x-rays or gamma rays is the fact that the attenuation by tissues depends on the photon energy. In order to calculate the mass or density of the bone from the measured transmission we need to know the attenuation coefficient, which depends on the photon energy. X-ray tubes produce photons with a wide range of energies. While one can characterize the x-ray beam by its average or effective energy, this may not be sufficient for accurate densitometry. Generally, lower energy photons are absorbed more easily. Because of this, as the beam penetrates through tissue the average energy of an x-ray beam

CONTAINS HIGHLY CONFIDENTIAL INFORMATION

changes as does the incremental attenuation by the tissue. This is called "beam hardening" and it causes the attenuation from the same bone tissue to vary depending on position within the patient and from one patient to another. Clearly, this is not consistent with accurate and precise measurements. Another complication is the fact that some x-ray photons are scattered by tissue. Scattering does not cause the photon to disappear from the beam but rather change direction. An ideal accurate measurement relies on sensing only photons that were unaffected by the tissue, but scattered photons could reach our detector, bias the measurement, and cause under-estimation of the bone mineral. Yet another complicating problem is the fact that the beam is attenuated not only by bone but also by any soft tissue surrounding (or inside of) the bone. We need to separate the effect of bone from that of soft tissues. Accurately quantifying bone mineral density with photons must avoid all these problems.

127. One solution, developed in the early 1960s by John Cameron and colleagues, used low-energy photons from a radioactive source that emits photons of the same energy (monoenergetic). The measurement used a very narrow pencil beam to avoid detecting scatter and a combined total thickness of soft tissue and bone that was uniform (*e.g.*, with a water bath), allowing correction for the effect of the soft tissue and accurately measuring the effect of the bone, which is converted to the bone

CONTAINS HIGHLY CONFIDENTIAL INFORMATION

mineral density. *See*, *e.g.*, "Accuracy of Bone Mineral Measurement" by Mazess, Cameron, et al., Science, Vol, 145, 388–89, 1964 (PLANMECA063002–63004).

128. This "single-energy" method, while accurate, is inconvenient because it requires ensuring a constant total thickness to remove the effect of soft tissue. To avoid this, an extension used photons of two well-defined energies, again from radioactive sources. Measurement of the transmission at each of the two energies allows calculation of the mass of two materials, for example soft tissue and bone. The calculated bone density is thereby corrected for the presence of the soft tissue. As an undergraduate in Dr. Mazess's laboratory, I built such a two-energy photon source and developed analysis software to implement this dual-energy method to measure bone mineral density and soft tissue composition in the forearm. *See* "The progress in dual photon absorptiometry of bone" by Mazess, Hanson, Kan, Madsen, Pelc, Wilson, and Witt. In Proceedings of the Symposium on Bone Mineral Determination, P. Schmelling, ed., Aktiebolaget Atom Energi, Studsvick, Sweden, 1974 (PLANMECA063009–63021). Systems were later built for bone densitometry of the lumbar spine.

129. While radioisotope sources have the advantage of delivering monoenergetic photon beams to avoid beam-hardening errors, they also have disadvantages. Radioisotope sources are not as intense as we would like to achieve short imaging times, so scan times with them may be too long. Also, in order to have a radioisotope

CONTAINS HIGHLY CONFIDENTIAL INFORMATION

source, the user needs a license from the Nuclear Regulatory Commission (NRC) so this agency can ensure safe handling of radioactive sources and control of the whereabouts of these materials. For these reasons, later devices used an x-ray tube instead of a radioisotope source. As mentioned above, x-ray tubes produce beams with a broad spectrum of photon energies, so these x-ray-tube-based densitometers need specific mathematics methods to correct for beam hardening (for example, as disclosed in Pelc 080 at 5:50–6:37). Beam collimation prevents excessive detection of scattered radiation. The resulting technique is called Dual Energy X-ray Absoptiometry (DEXA) and has become a popular technique for bone densitometry. Examples include the DEXA device described in U.S. Patent No. RE 36,162 to Bisek *et al*. ("Bisek 162," PlanmecaPA000184–195) and that described in Gershman 765. The fluoroscopy technique described in U.S. Patent No. 6,315,445 to Mazess *et al*. ("Mazess 445," PlanmecaPA000312–337) also uses a dual energy x-ray technique but it uses a cone beam, which is much more likely to have problems with scattered radiation. Therefore, in addition to correction for beam-hardening, Mazess 445 also describes a scatter correction technique that it explains is needed to achieve quantitative accuracy with such cone-beams.

130. Radiography and the DEXA and fluoroscopy techniques described above produce 2-dimensional (2D) projection images of the 3-dimensional object. One limitation of this mode of imaging is that all the tissues in the same line of x-ray

CONTAINS HIGHLY CONFIDENTIAL INFORMATION

travel are superimposed. This overlap of tissues can make visualization of subtle features hard to perceive. To address this limitation, a variety of "tomography" methods have been developed. In the oldest method, the x-ray source and detector move in a particularly defined way as the image is collected. The motion is designed so that tissues in a focal region appear sharply focused while tissues in front of or behind the focal region are blurred. Panoramic dental images are an example of tomography in which the focal region is curved and includes all the teeth. In these classical tomography methods, the focal region is defined by the relative motion of the source and detector and a single image is produced per exposure. An example of panoramic tomographic imaging is disclosed in U.S. Patent No. 5,500,884 to Guenther *et al*. ("Guenther 884," PlanmecaPA000034–44)).

131. In a variant of tomography called "tomosynthesis", multiple projections are measured by the detector during the motion, and computer algorithms are used to produce tomographic images. An important advantage of tomosynthesis compared to classical tomography is that the same measured data can be used to compute multiple tomograms, each with its own focal region. An example of tomosynthesis is described in Webber 686. With both classical tomography and tomosynthesis, tissues in the focal region are sharp while tissues outside the focal region are blurred. This residual signal is a source of error if one wants to use the images for quantitative densitometry. The blurring makes the tissues outside the focal region less distracting

CONTAINS HIGHLY CONFIDENTIAL INFORMATION

when one is interested in the focal region; however, the signal from the tissues outside the focal region is not removed but only blurred.

132. By contrast, in Computed Tomography (CT), projection measurements are made in all directions and a computer algorithm is used to compute a value related to the attenuation coefficient at each point with, ideally, complete suppression of signals from surrounding tissues. The amount of x-ray attenuation at each point is reported in Hounsfield Units (HUs, in honor of Godfrey Hounsfield, key in the development of CT and co-recipient of a Nobel Prize for his work). HU values are sometimes referred to as "CT numbers".

133. In one type of CT scanner, the x-ray beam is collimated to a thin fan beam that defines a slice through the patient, the beam is rotated about the normal to that plane while a row of detector elements measures x-ray transmission to collect projections, and the computer algorithm calculates an image of that plane. Multiple scans can be used to produce a 3D volume of data. In multi-detector CT (MDCT), the beam is made thicker, there are multiple rows of detectors, and multiple slices can be produced in one rotation. In cone-beam CT, a cone-beam of radiation and a 2D array of detectors are used, and an entire volume can be reconstructed from the data from a single rotation. As with other x-ray techniques, x-ray transmission is subject to beam-hardening and, as the beam is widened to a cone-beam, scatter becomes more of a problem.

CONTAINS HIGHLY CONFIDENTIAL INFORMATION

134. The ability of CT to estimate the attenuation coefficient at each point in the image while suppressing the signal from surrounding tissues makes it attractive for use in bone densitometry. However, CT images, like other x-ray imaging methods, are subject to errors from beam hardening, scatter, and other system imperfections. These can reduce the accuracy and precision of bone density estimates. Also, while the attenuation coefficient at a point depends on the bone mineral density, it also depends on other things. Thus, for multiple reasons, a person of skill in the art in 1999 would not consider CT image values as being quantitative bone densitometry. For example, "Methodologies for the Measurement of Bone Density and Their Precision and Accuracy" is a review paper written by Paul Goodwin and published in Seminars in Nuclear Medicine, Vol. XVII, No. 4, 293–304, 1987 ("Goodwin 1987," PLANMECA062984–62995). In its discussion on CT, Goodwin 1987 states "CT numbers are thus related to linear attenuation coefficients, but the latter cannot be used to accurately determine density, since the x-ray beam contains a wide spectrum of photon energies, each having different attenuation values. Furthermore, the transmission spectrum is changed as the beam passes through the patient, an effect known as beam hardening." Goodwin 1987 at 298, col. 2. These problems were well-recognized at that time, and even earlier, and led to efforts to overcome them.

CONTAINS HIGHLY CONFIDENTIAL INFORMATION

135. The article "Precise Measurement of Vertebral Mineral Content Using Computed Tomography" by Christopher E. Cann and Harry K. Genant published in the Journal of Computer Assisted Tomography in 1980 (hereinafter, "Cann 1980," PLANMECA009416–9423) explains this and describes specialized corrections that improve the situation. One key difference between their technique and conventional CT is that the former includes a reference standard next to the patient and is imaged in the scan along with the patient. The image values of the standard are used to correct for errors from beam hardening, scatter, and other imperfections. The resulting technique is called Quantitative Computed Tomography (QCT). Prior to 1999 there were also systems for dual energy CT for bone densitometry. One system was described in "Evaluation of a dual-energy computed tomography apparatus. II Determination of vertebral bone mineral content", published by Vetter *et al*. in Medical Physics, vol. 13, No. 3, pp 340–343, 1986 (PLANMECA063048–63051).

136. To a person of skill in the art in 1999, DEXA and QCT would be viewed as techniques capable of quantitative bone densitometry. Conventional and cone-beam CT would not be unless modified through special efforts (*e.g.,* as in QCT) to accurately measure bone density. This view is supported by a report from the Consensus Development Panel on Osteoporosis Prevention, Diagnosis, and Therapy. The Panel was convened in 2000 to present the then most recent information available in these areas. They searched the literature from 1995 to 1999.

CONTAINS HIGHLY CONFIDENTIAL INFORMATION

The report, published in JAMA, vol. 285, No. 6, pp. 785–795, 2001 (PLANMECA063029–63039), discussed the measurement of bone mineral density (BMD) with dual energy x-ray absorptiometry. Conventional CT and cone beam CT are never mentioned as tools for measuring BMD.

137. This view is supported by Goodwin 1987. The introduction, in the context of the history of bone densitometry, mentions attempts to measure bone density with radiography (conventional "x-rays") but states "Although fairly accurate for excised or appendicular bones, all methods of radiographic photodensitometry are sensitive to changes in soft tissue cover, which may cause errors of 20% or greater. Thus, radiographic absorptiometry for other than the hands has been largely abandoned in favor of methods considered either simpler or more accurate: single or dual photon absorptiometry and quantitative computerized tomography (QCT)." Goodwin 1987 at 293, col. 1. The paper presents information about the accuracy and precision of bone densitometry with these three methods and no others, supporting my statement that a person of skill in the art would not have considered cone-beam CT, conventional CT, tomography or tomosynthesis, and radiography as methods capable of producing BMD data.

138. Dr. Massie testified that his concept, the idea behind his patent, was to adapt the bone densitometry tools "used in medicine at the time to diagnose decalcification of bone and bring it into the dental field for the sake of decalcification of teeth and

CONTAINS HIGHLY CONFIDENTIAL INFORMATION

bone in the oral and maxillofacial complex." Massie Tr at 22:19–22. Consistent with this, in a letter to Dr. Christensen, he stated that he was motivated to improve dentistry using densitometry, "that the field of dentistry could benefit from the ability to diagnose decalcification of H.A. in teeth as is already presently being done in the field of medicine, more specifically orthopedic/bone work." OI001143. However, the tools of bone densitometry which were developed for use in what Dr. Massie described as "orthopedic/bone work" had already been applied to dentistry. For example, Klemetti, *et al*. used QCT to study bone density in the mandible (Klemetti *et al*., "Trabecular bone mineral density of mandible and alveolar height in postmenopausal women", Scand. J. Dent Res, vol. 101, pp. 166–170, 1993 (PLANMECA062996–63001). Devlin and Horner used dental panoramic tomograms (including a reference standard to correct for biases) to study mandibular bone mineral content (Devlin and Horner, "Measurement of mandibular bone mineral content using the dental panoramic tomogram", J. Dent., vol. 19, pp 116–120, 1991 (PLANMECA062979–62983)). Corten et al. reported on the use of DEXA to study mandibular bone density (Corten et al., "Measurement of mandibular bone density ex vivo and in vivo by dual-energy x-ray absorptiometry", Arch Oral Biol., vol. 38, no. 3, pp. 215–219, 1993 (PLANMECA062974–62978)). There was even a cone-beam CT scanner designed and built specifically for dental applications. "A new volumetric CT machine for dental imaging based on the cone-

CONTAINS HIGHLY CONFIDENTIAL INFORMATION

beam technique: preliminary results", published by Mozzo et al. in European Radiology, vol. 8, 1558–1564, 1998 (PLANMECA063022–63028), states that their system was a "commercial CBCT system devoted to dento-maxillo-facial imaging. The system did not incorporate the aspects I discuss above that are necessary for quantitative bone mineral densitometry. However, if the Asserted Claims are interpreted to include conventional cone-beam CT imaging as the data source, then this reference is especially relevant. It is clear, then, that while Dr. Massie might have thought that the idea of applying bone densitometry methods, including tomographic ones, to dentistry was originally his, it was clearly not.

CONTAINS HIGHLY CONFIDENTIAL INFORMATION

VIII. Anticipation and/or Obviousness of the Asserted Claims Based on Specific Prior Art References

A. Webber 686 in Combination with Other Prior Art

1. Webber 686

139. U.S. Patent No. 5,214,686 to Webber ("Webber 686," PlanmecaPA000120–134) was filed on December 13, 1991, by Richard L. Webber, issued on May 25, 1993, and is titled "Three-Dimensional Panoramic Dental Radiography Method and Apparatus Which Avoids the Subject's Spine." Webber 686 issued as a patent many years before the claimed priority date of December 1, 1999 and therefore is prior art to the Patents-in-Suit.

2. Webber 686 and Other Prior Art Applied to the Asserted Claims of the Patents-in-Suit

140. Below I describe in summary how Webber 686 anticipates and/or in combination with other specified prior art renders obvious the limitations of each asserted claim. I have reviewed the invalidity contentions served by Planmeca, including the chart identifying disclosures of Webber 686 and, as necessary, other prior art against the claim limitations. I agree with that chart and attach it as **Exhibit 5** as further evidence in support of my opinion that Webber 686 either alone, or in combination with the other identified references, anticipates or renders obvious each asserted claim. I reserve the right to rely on disclosures identified in **Exhibit 5** in addition to those listed below.

CONTAINS HIGHLY CONFIDENTIAL INFORMATION

a) X-ray Equipment

141. Webber 686 discloses the use of x-ray equipment, including both an external x-ray source, for example, x-ray source 32, and an external detector array/sensor, for example, detector array 33. Figures 3, 5, and 11 of Webber 686 depict the positioning of the x-ray source and the detector array:

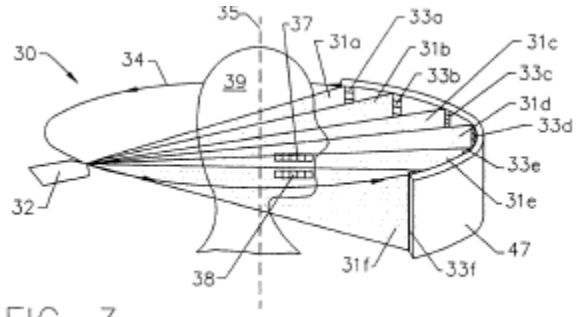

FIG. 3.

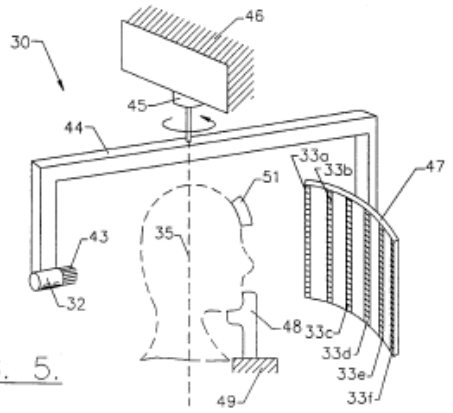

FIG. 5.

CONTAINS HIGHLY CONFIDENTIAL INFORMATION

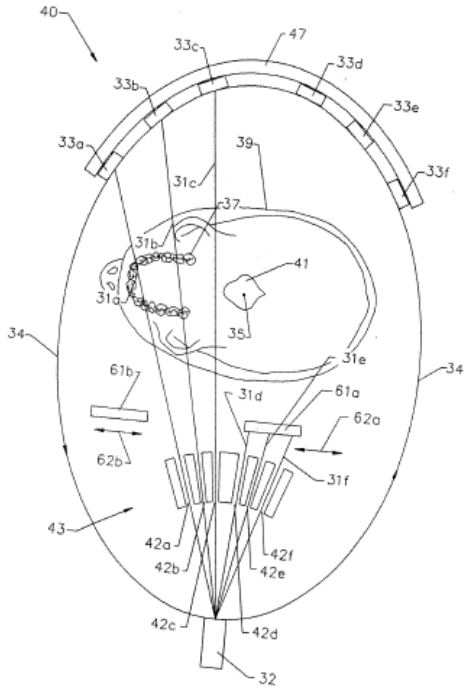

FIG. 11.

142. Webber 686 further discloses that the detector array could be a linear radiation detector, such as a vertical, linear Charge Coupled Device (CCD) array. Webber 686 at 5:24–30; 6:42–48.

143. Figures 6A and 6B of Webber 686 depict alternate embodiments for the detector array with Figure 6A illustrating four detector arrays labeled 33a′ to 33d′ and Figure 6B showing a "single, large two-dimensional matrix of detector elements 53." Webber 686 at 9:59–10:9. Below are Figures 6A and 6B:

CONTAINS HIGHLY CONFIDENTIAL INFORMATION

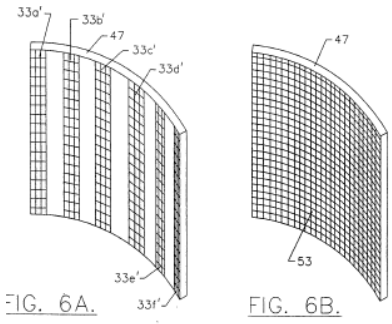

144. Figures 7 and 8 further show in block diagram form the x-ray source and detector array and their connection to other components of the Webber system. Webber 686 at Figs. 7–8.

b) Intraoral Source

145. Claim 3 of the ’262 patent requires an intraoral source. Webber 686 does not disclose the use of an intraoral source, but such sources were known in the prior art. For example, U.S. Patent No. 4,188,537 to Franke (“Franke 537,” filed September 19, 1977 and issued February 12, 1980 (PlanmecaPA000160–165)) discusses such prior art intraoral sources. Franke 537 at 1:16–21.

c) Single Axis Rotation

146. As shown in the Figures 4 and 5 above, Webber 686 discloses that the x-ray source, for example, x-ray source 32, travels along a single axis and simultaneously rotates around the single axis. Webber 686 further specifies that the “radiographic source and radiographic detectors are rotated about a vertical axis.” Webber 686 at Abstract. Webber 686 also notes that it was known to “synchronously rotat[e] the fan-shaped beams, and the corresponding detectors, about an axis orthogonal to the

CONTAINS HIGHLY CONFIDENTIAL INFORMATION

plane of the teeth." Webber 686 at 4:40–45; *see also* Webber 686 at 5:6–10, 6:45–50, 7:12–19, 7:63–66.

d) Restricted Beam Device

147. As further required by certain Asserted Claims, Webber 686 also discloses the use of a Restricted Beam Device, for example collimator 43 (which could be a six-way collimator or a multi-slit collimator) attached to x-ray source 32, which creates fan-shaped x-ray beams. Webber 686 at Figs. 4, 5, & 11, 5:24–30, 7:51–61, 9:13–21, 9:38–42. The energy in the Webber 686 system is therefore collimated. In addition, Webber 686 notes that in prior art panoramic radiography systems, a slit collimator 26 could be used. Webber 686 at 7:8–11.

e) Dual Energy

148. Webber 686 discloses that the X-ray Equipment may comprise a Restricted Beam Device as discussed above. The x-ray source 32 in Webber 686 is described as being electronically controlled:

> As shown [in Figure 7], an electronic controller such as a stored program microcomputer may be electrically connected to x-ray source 32, motor 45 and detector array 33, for electronically controlling x-ray generation by x-ray source 32, and the rotation of motor 45.

Webber 686 at 10:12–17. That disclosure demonstrates that the Webber 686 X-ray Equipment could be programmed to generate x-rays at various energy levels, which could include dual energies.

CONTAINS HIGHLY CONFIDENTIAL INFORMATION

149. Webber 686 also describes that it was known to use "at least two fan-shaped beams having different energy spectra which are obtained from a single x-ray source. . . ." Webber 686 at 4:33–39. That is a discussion of dual energy. Webber 686 therefore discloses that a dual energy restricted beam device could be used.

150. In addition, one of skill in the art would have recognized that the basic teachings of Webber 686 could be augmented by using dual energy, restricted beam devices as described in other prior art references. For example, U.S. Patent No. 6,315,445 to Mazess *et al*. ("Mazess 445," filed December 21, 2000 claiming priority to a divisional application filed March 30, 1999 and other applications dating back to February 21, 1996, issued November 13, 2001 (PlanmecaPA000312–337)) describes that quantitative bone density could be determined by using dual energies with similar equipment to that used in Webber 686. Specifically, Mazess discloses:

> Referring now to FIG. 1, the image produced by the present invention may be used for quantitative analysis including, for example, that of making a bone density measurement. It is known to make bone density analyses from x-ray images through the use of dual energy techniques in which the voltage across the x-ray tube is changed or a filter is periodically placed within the x-ray beam to change the spectrum of the x-ray energy between two images. The two images may be mathematically processed to yield information about different basis materials within the image object (e.g. bone and soft tissue). For these quantitative measurements, it is desirable to eliminate the effect of scatter.

Mazess 445 at 14:13–24; *see also* Mazess 445 at 1:59–2:3, 17:30–36.

CONTAINS HIGHLY CONFIDENTIAL INFORMATION

151. Similarly, one of ordinary skill in the art may have looked to U.S. Patent No. Re 36,162 ("Bisek 162," filed August 26, 1996 and issued March 23, 1999 (PlanmecaPA000184–195)) to add a quantitative determination to the method disclosed in Webber 686. Bisek 162 describes using a dual energy restricted beam device to measure bone mass using similar x-ray equipment to that used in Webber 686. Bisek 162 at 1:48–51, 10:55–62. Specifically, Bisek describes the dual energy restricted beam device as follows:

> Each detector element 47 of the detector array 50 incorporates two side-by-side scintillators and photodetectors to measure the x-rays fluence of the polychromatic fan beam 48. in one of two energy bands and thus to provide during scanning. a dual energy measurement at each point in the scan. As noted above, such dual energy measurements allow the tissue of the patient 14 being measured at a given point associated with a detector element 47 to be characterized as to its composition. for example, into bone or soft tissue.

Bisek 162 at 6:9–8.

f) Cone Configuration

152. Webber 686 describes a method using fan-shaped radiation beams. The fan shape is a narrow cone configuration. Webber 686 at Abstract, Figs. 3–4. In addition, the multiple fan-shaped radiation beams form a cone configuration.

153. At the time of the claimed priority date, it was known to use x-ray beams of alternative geometries to accomplish computed tomography and related radiographic techniques. Therefore even if the fan-shaped radiation beams of

CONTAINS HIGHLY CONFIDENTIAL INFORMATION

Webber 686 are not considered to be of a cone configuration, one of ordinary skill in the art would have known that an x-ray source designed to emit an x-ray beam in a cone configuration could be substituted for the described source that emits fan-shaped x-ray beams of Webber 686 and not yield unpredictable results. It would have been obvious to combine prior art disclosing such an x-ray source with the teachings of Webber 686 because the references all teach imaging systems that utilize similar equipment and x-ray sources.

154. For example, Bisek 162 recognizes that both fan-shaped beams and broad cone-shaped beams were known in the art. Bisek 162 at 1:25–28, 1:66–2:1. While Bisek 162 acknowledges that fan-shaped beams may have some advantages over broad area cone beams, one of skill in the art would understand that the fan-shaped beams of Webber 686 could be replaced by narrow cone-shaped beams and the difference accounted for in the computer processing.

155. Similarly, Mazess 445 describes using equipment similar to that disclosed in Webber 686 to emit an x-ray beam in a cone configuration. Mazess 445 at 15:64–16:9 (". . . the x-ray source 322 projects a cone-beam of x-ray radiation . . .").

156. U.S. Patent No. 4,188,537 to Franke ("Franke 537," filed September 19, 1977 and issued February 12, 1980 (PlanmecaPA000160–165)) further exemplifies the cone configuration used in prior art systems. The shape is typically created by passing the x-ray beam through an aperture as shown in Figure 1:

CONTAINS HIGHLY CONFIDENTIAL INFORMATION

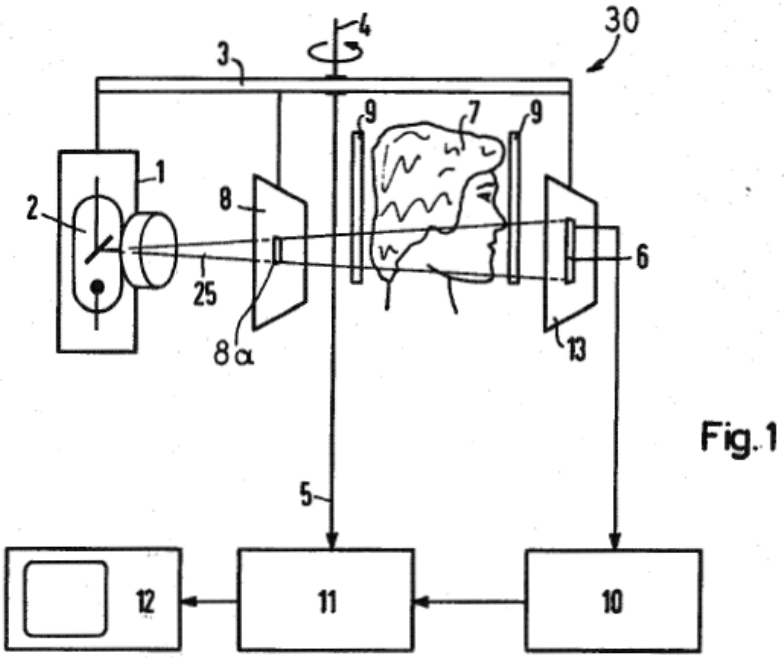

Franke 537 at Fig. 1; *see also* Franke 537 at Figs. 2–3, 3:61–64.

g) Input Device

157. Webber 686 discloses an input device, for example, imaging equipment such as the detector array 33, that is connected to the microprocessor of the disclosed system. Figure 7 shows the connection between the detector array 33 and the controller 50/computer 52 and Figure 8 shows the processing occurring in the controller:

CONTAINS HIGHLY CONFIDENTIAL INFORMATION

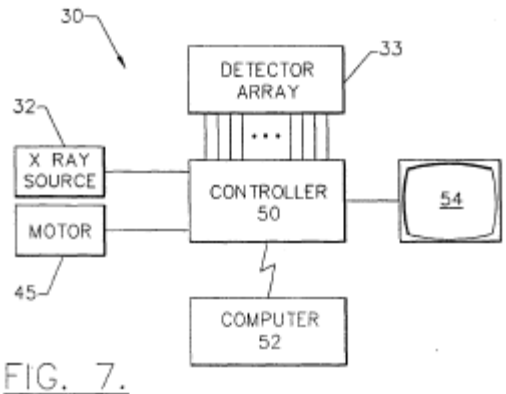

FIG. 7.

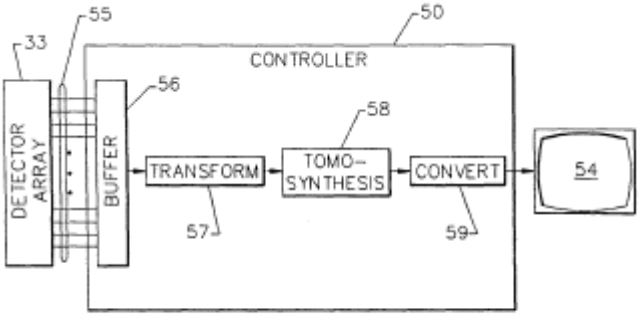

FIG. 8.

158. Webber 686 specifically notes that:

> The signals from the detectors 33 may be processed using conventional tomographic processing steps, so that new processing algorithms need not be developed, and known tomosynthetic enhancement techniques may be used.

Webber 686 at 9:25–29.

159. Webber 686 also describes:

> Referring now to FIG. 7, a general hardware block diagram of the apparatus 30 of the present invention will now be described. As shown, an electronic controller such as a stored program microcomputer may be electrically connected to x-ray source 32, motor 45 and detector array 33, for electronically controlling x-ray generation by x-ray source 32, and the rotation of motor 45. The signals from the detector array 33

CONTAINS HIGHLY CONFIDENTIAL INFORMATION

> may be stored in controller 50 and may be processed therein as described below in connection with FIG. 8.

Webber 686 at 10:10–19; *see also* Webber 686 at 10:27–31.

h) Dental Input Device

160. Webber 686 discloses a dental or orthopedic input device including an energy source and an energy sensor; said source and said sensor being placed with at least a portion of the patient's dental or orthopedic structure therebetween. Specifically, Webber 686 discloses a dental input device that includes an energy source (e.g., x-ray source 32) and an energy sensor (e.g., detector array 33) wherein the patient's dental structure being imaged is placed between the source and sensor. Figure 3 of Webber 686 illustrates that configuration:

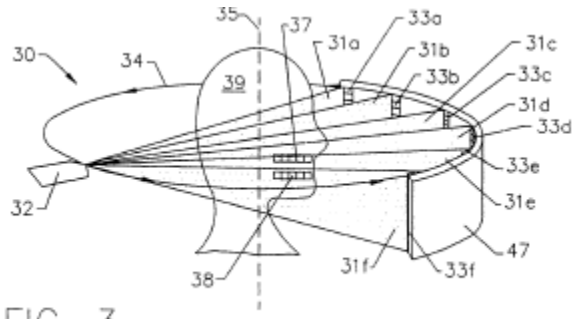

FIG. 3.

161. As explained above regarding the Input Device, the radiation detected at the detector array 33 is used as an input to the controller.

i) Positioning Motor

162. Webber 686 also discloses the use of a positioning motor connected to the microprocessor of the system that moves in response to signals or commands from

CONTAINS HIGHLY CONFIDENTIAL INFORMATION

the microprocessor. Specifically, Webber 686 discloses motor 45, which is used to position the x-ray source 32 and detector array 33. Webber 686 at Figs. 5 & 7, 9:42–45, 10:10–17. Webber 686 also notes that motor 45 is responsive to commands sent from the controller, which inherently contains a microprocessor to enable control of the motor. Webber 686 at 10:10–17.

j) Three Axes

163. As discussed above with respect to the Positioning Motor, Webber 686 discloses that it is possible to position the X-ray Equipment with respect to three axes of movement. Specifically, Webber 686 discloses positioning the X-ray Equipment in the horizontal plane and around a vertical axis. Webber 686 at Figs. 3–5, 11, 7:12–19, 8:33–41, 9:42–45. Thus, the positioning includes the x, y, and z directions.

k) Preprogrammed Scan Path

164. Webber 686 also discloses that there is a preprogrammed scan path programmed into the microprocessor as required by claim 6 of the ’301 patent, specifically the horizontal rotation path 34 of the x-ray source and detector array around the vertical axis that is controlled by the described electronic controller. Webber 686 at Abstract, Figs. 3–4, 7, & 11, 7:63–66, 10:12–17.

CONTAINS HIGHLY CONFIDENTIAL INFORMATION

l) Convertor

165. Webber 686 further discloses a convertor, for example, transforming means 57, that is connected to the microprocessor and detector array and converts a signal from the detector array:

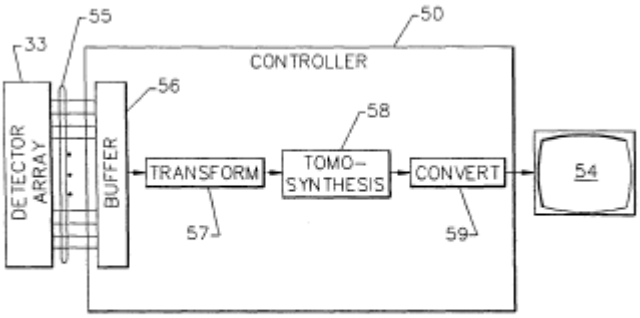

FIG. 8.

Webber 686 at Fig. 8. Specifically, Webber 686 describes that:

> After appropriate storage of the signals in the buffer 56, a nonlinear transformation may be applied by transforming means 57 in order to convert the curved detector geometry of FIG. 3 into the equivalent of the flat detector geometry of FIG. 1.

Webber 686 at 10:39–43; *see also* Webber 686 at 10:17–21.

166. The conversion of the signals from the detector array in transforming means 57 of Webber 686 further indicates that it is an analog-to-digital convertor as further required by claim 3 of the ’301 patent. In other words, the detected radiation received at the detector array sends signals to transforming means 57, which converts those analog signals into digital signals that enable the tomosynthetic processing contemplated by Webber 686.

CONTAINS HIGHLY CONFIDENTIAL INFORMATION

m) Conversion Means

167. Webber 686 as disclosed above discloses a Convertor, which is sufficient to also disclose the conversion means requirements of claim 1 of the ’301 patent. Webber 686 further discloses the use of a Merger Device as discussed below, which is connected to an analog-to-digital convertor and the microprocessor and thus sufficient to meet the requirements of claim 4 of the ’301 patent.

n) Merger Device

168. Webber 686 discloses a Merger Device as required by claim 4 of the ’301 patent, specifically, Webber discloses buffer 56 that is connected to the analog-to-digital convertor (as discussed above with respect to Convertor) and to the microprocessor (Controller) as shown in Figure 8:

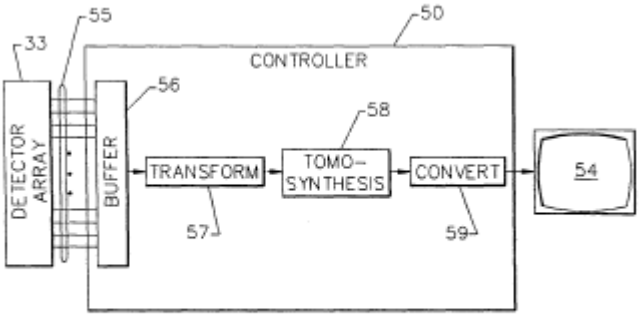

FIG. 8.

169. Webber describes buffer 56 as follows:

> After appropriate storage of the signals in the buffer 56, a nonlinear transformation may be applied by transforming means 57 in order to convert the curved detector geometry of FIG. 3 into the equivalent of the flat detector geometry of FIG. 1. Alternatively, this transformation

CONTAINS HIGHLY CONFIDENTIAL INFORMATION

> need not be performed, and the data processed tomosynthetically, as described below. Conventional tomosynthetic processing means 58 may be used to synthesize tomosynthetic slices.

Webber 686 at 10:39–48.

o) Controller

170. Webber discloses a Controller, specifically, controller 50, which includes a microprocessor (tomosynthesis processing means 58 or the described stored program microcomputer) and a memory device connected to the microprocessor. Webber 686 describes:

> The signals from the detector array 33 may be stored in controller 50 and may be processed therein as described below in connection with FIG. 8. The processed signals may be transferred to a remote computer 52 for remote analysis or viewing.

Webber 686 at 10:17–21; *see also* Webber 686 at Figs. 7–8, 10:27–31. Webber further specifies that the signals from the detector array 33 are stored in controller 50 where they may be processed. Webber 686 at 10:10–19. Therefore the controller inherently contains a memory device connected to the microprocessor in order to store the signals prior to processing. In addition, Webber 686 discusses the use of a stored program microcomputer, which includes a memory device.

171. The Controller disclosed further includes means for storing and/or is adapted for storing Tomographic Models as required by claim 1 of the ’301 patent and the independent claims of the ’374 patent. Specifically, Webber 686 discloses that the

CONTAINS HIGHLY CONFIDENTIAL INFORMATION

Tomographic Models (*see* below) resulting from the tomosynthetic processing illustrated in Figure 8 are stored. Webber 686 at 10:10–19.

172. Further, Webber 686 does not contemplate or require the use of fiducial markers, which is a negative limitation of certain Asserted Claims.

p) Computer

173. Webber 686 discloses that the Controller could be a Computer which includes a digital memory storing patient densitometry information, specifically, Webber 686 discloses that controller 50 could be a stored program microcomputer, which stores patient radiographic intensity data. Webber 686 at Figs. 7–8, 10:10–23. Webber 686 further discloses that the Computer includes an input, specifically the detector array which provides signals as an input from the X-ray Equipment to the Controller, and output, specifically the Tomographic Models output to display 54, as required by claim element 1(b) of the ’262 patent. Webber 686 at Fig. 7, 10:27–31, 10:48–50, claim 9. Webber 686 further notes that a remote computer 52 may also be a part of the system for remote analysis or viewing. Webber 686 at Fig. 7, 10:19–21.

q) Imaging Software

174. Webber 686 discloses Imaging Software associated with the Computer as required by claim element 1(h) of the ’262 patent. Specifically, Webber 686 contemplates stored programs that carry out the imaging functions disclosed that are associated with the Computer (for which Controller is a stored program

CONTAINS HIGHLY CONFIDENTIAL INFORMATION

microcomputer as described above). Webber 686 at Abstract, Fig. 8, 2:14–21, 5:58–59, 6:58–67, 7:4–6 (discussing deconvoluting algorithms), 8:9–14, 8:32–37, 9:25–35, 10:38–50.

r) Output Device

175. Webber 686 discloses an Output Device, specifically, display 54. Webber 686 at 10:21–23, 10:48–50. That Output Device is connected to the microprocessor and the computer output (e.g., output from controller 50 (when a stored program microcomputer) or the remote computer 52). Webber 686 at Figs. 7–8. The Output Device disclosed is further adapted for receiving a Tomographic Model from the microprocessor. Webber 686 at Abstract, Figs. 7–8.

176. As further required by claim 1 of the ’262 patent, the Output Device disclosed in Webber 686 communicates densitometry model comparison information. Specifically, Webber 686 indicates that the three-dimensional images generated by the tomosynthetic process disclosed in Webber 686 may be projected onto visual display 54. Webber 686 at Abstract, 9:5–10, 10:21–23, 10:48–50.

s) Display

177. Webber 686 further discloses the use of a Display as part of the Output Device. Specifically, as discussed above display 54 is part of the Output Device. Webber 686 at Figs. 7–8. That Display displays information pertaining to the

CONTAINS HIGHLY CONFIDENTIAL INFORMATION

Densitometry model (e.g., three-dimensional image or representation relying on radiographic intensity data). Webber 686 at 2:14–18, 9:5–10, 10:21–23, 10:48–50.

t) Color Monitor

178. Webber 686, either alone or in combination with other prior art references specified below or the knowledge of one skilled in the art, discloses a Color Monitor—a color monitor adapted to receive the Tomographical Model output color-coded to represent Densitometry. Specifically, Webber 686 discloses that the image (as discussed above the Tomographical Model) "may also be projected onto a visual display 54 such as a cathode ray tube (CRT) screen." Webber 686 at 10:21–23. As of the claimed priority date, it was known that CRT screens could display color images. Moreover, it was known in the art that images/models could be color-coded. For example, the Planmeca DIMAXIS User Manual dated November 1998 ("DIMAXIS 1998," PlanmecaPA000000506–565) discusses pseudo-coloring of images. DIMAXIS 1998 at 18, 51.

179. It further would have been obvious to combine the Webber 686 disclosures with other references disclosing similar imaging systems and/or use displays to show images that were color-coded to represent Densitometry and thus meet the Color Monitor requirement.

180. For example, Mazess 445 describes a video monitor on which images are processed and displayed to show bone mineral density values, including using image

CONTAINS HIGHLY CONFIDENTIAL INFORMATION

recognition type techniques and other techniques such as texture analysis. It was known in the art that these techniques included color-coding and the images of Mazess 445 contain Densitometry information, which could be color-coded. Mazess 445 at Figs. 1–3, 20, 25; 1:36–43; 4:22–34; 16:1–4; 20:46–63.

181. As another example, the article "In Vivo Reproducibility of Three-Dimensional Structural Properties of Noninvasive Bone Biopsies Using 3D-pQCT" published in the Journal of Bone and Mineral Research in 1996 to Muller *et al*. ("Muller 1996," PlanmecaPA000171–176) discusses using Gouraud shading to create a realistic representation of the bone being imaged. Gouraud shading was known in the art as a method to simulate the differing effects of light and color across the surface of an object. Muller 1996 at 1746; Fig. 1. Muller 1996 used three-dimensional peripheral quantitative computed tomography (3D-pQCT) and an analysis of bone density to create the images shown and described. Muller 1996 at Abstract.

182. U.S. Patent No. 6,081,739 to Lemchen ("Lemchen 739," filed May 21, 1998, issued June 27, 2000 (PlanmecaPA000001–10)) relates to the field of orthodontics and oral surgery. It describes a prior art combined CSPECT display terminal 26 that displays a color-shaded image of combined CT and Single Photon Emission Computed Tomographic ("SPECT") data that may be printed to a color laser printer 28. Lemchen 739 at 2:19–26. The invention described in Lemchen 739 builds on

CONTAINS HIGHLY CONFIDENTIAL INFORMATION

this prior art and incorporates color-coding of images (including those generated from an x-ray exposure and detection system, three dimensional contours scanning system, and a surface image scanning system and composite images from all of the systems) and display on monitor 16. Lemchen 739 at 4:43–52; 6:28–32, 6:58–7:4, 7:13–24, 8:28–34, 8:62–9:9. Lemchen therefore discloses a Color Monitor.

183. Similarly, U.S. Patent No. 6,898,302 to Brummer ("Brummer 302," PlanmecaPA000294–311) was filed by Marijn E. Brummer on May 22, 2000 claiming priority to a provisional application filed May 21, 1999 and thus is prior art to the Patents-in-Suit, which claim priority to a December 1, 1999 application. Brummer 302 describes an apparatus that "includes an imaging device for acquiring one or more plane images of the subject, a 3-D model device, in communication with the imaging device, for generating a 3-D model based upon the one or more plane images acquired from the imaging device." Brummer 302 at 3:52-56. It describes 3-D visualization techniques to take images from object scans and create 3D images while retaining the "color-coded intensity values." Brummer 302 at 3:30–35, 3:39–42. Brummer 302 describes an image display which could either be a CRT or a liquid crystal display (LCD) screen and notes that a "sophisticated implementation may modulate the color of each point in the objects visualized." Brummer 302 at 8:28–34, 11:6–11, 15:5–17. Although Brummer 302 preferentially discusses applying such 3D visualization techniques to MRI images, Brummer 302 also

CONTAINS HIGHLY CONFIDENTIAL INFORMATION

mentions x-ray computed tomography from which the Brummer 302 techniques could be similarly applied. Brummer 302 at 2:38–44.

u) Color Printer

184. Webber 686, in combination with one of the references below, discloses a Color Printer—one adapted to print images color-coded to correspond to the Densitometry of the Tomographic Models. As discussed above, Webber 686, either alone or in combination, discloses a Color Monitor to display Tomographic Models color-coded to correspond to the Densitometry of the Tomographic Models. It would have been natural for one of skill in the art to include a color printer with such a system to enable printing of the color-coded Tomographic Models.

185. In addition, other prior art makes clear that printers were routine parts of imaging systems in order to record on paper the images created. For example, U.S. Patent Number 4,856,038 to Guenther *et al*. ("Guenther 038," PlanmecaPA000135–142) acknowledges that a printer could be added to the described imaging system. Guenther 038 at 2:52–56. Mazess 445 also discusses using compact digital printers in imaging systems. Mazess 445 at 1:45–51.

186. Likewise, as discussed above, Lemchen 739 acknowledges that a color laser printer could be used to print the color-coded images. Lemchen 739 at 2:19–26.

187. The Planmeca DIMAXIS Imaging Software User's Manual also contemplated printing pseudo-colored images using a printer. DIMAXIS 1998 at 4, 18, 51.

CONTAINS HIGHLY CONFIDENTIAL INFORMATION

v) Densitometry

188. The Court construed "densitometry" to mean "quantitatively calculated bone density."

189. Webber 686, alone, does not disclose quantitatively calculating bone density under my interpretation of that requirement. However, Osseo appears to be alleging that any calculation to convert analog signals representing the linear attenuation of x-rays through an object is sufficient to satisfy the Densitometry requirement under the Court's construction. I strongly disagree with Osseo's position. Nevertheless, under Osseo's interpretation, Webber 686 discloses Densitometry because it discloses calculations to quantify the attenuation of radiation through the object being scanned. Webber 686 at Abstract, 7:49–8:14, 10:10–23. Likewise, the three-dimensional image produced by the Webber 686 disclosed tomosynthetic process would meet the Densitometry model limitations of the Asserted Claims under Osseo's interpretation.

190. However, it would have been obvious to one of skill in the art to combine the tomosynthetic process described in Webber 686 with densitometry methods disclosed by other prior art references to generate densitometry models or obtain patient densitometry information. Prior art describing densitometry methods use the same or similar x-ray equipment to that used in Webber 686. Further, both densitometry methods and the tomosynthetic process of Webber 686 use

CONTAINS HIGHLY CONFIDENTIAL INFORMATION

radiographic intensity data to gain information or generate an image about the object scanned.

191. The Patents-in-Suit themselves acknowledge prior art densitometry methods were exemplified in U.S. Patent No. 5,838,765; Pelc 080; and Bisek 162. '301 patent at 2:1–6. Bisek 162 and its application to the Asserted Claims is described in detail below. Further, the inventor, Dr. Massie, admitted in deposition that his "idea" was merely to use prior art densitometry methods and apply them in a dental application. Massie Tr. at 20:22–21:7; 22:15–23, 66:16–67:6.

192. As another example, the Webber 686 disclosures could be combined with the densitometry disclosures of Mazess 445 to generate Densitometry models, provide Densitometry model comparison information, and obtain patient Densitometry information. Mazess 445 is titled "Densitometry Adapter for Compact X-ray Fluoroscopy Machine" and discusses how to perform the "necessary correction of images for the quantitative accuracy needed for bone densitometry." Mazess 445 at Abstract; *see also* Figs. 1–3, 20, 25 (showing the X-ray Equipment used and, in Figure 20, how the data is processed to generate and display an image). Specifically, Mazess 445 describes how to quantitatively calculate bone density:

> The images are then processed according to well understood techniques to produce a bone mineral density value at process block 428. This bone mineral density value indicates the amount of bone material at each pixel of the image largely independent of surrounding soft tissue. The pixel image may be analyzed in a number of methods but most

CONTAINS HIGHLY CONFIDENTIAL INFORMATION

> simply, as indicated by process block 430, by defining either automatically or manually a desired region of interest within the image and making a measurement of total bone density within that region. Automated techniques may look for a local maximum or minimum of bone density or may use image recognition type techniques to locate reproducibly a particular region of the forearm or os calcis. Morphometric analysis may be applied to the image to detect bone fracture and other techniques such as texture analysis may be performed according to methods well known in the art. The results of the analyses and images so processed may be displayed by the computer 314.

Mazess 445 at 20:46–63.

193. Muller 1996 further uses similar X-ray Equipment to that of Webber 686 and also discloses imaging using 3D-pQCT to determine bone density in vivo. Muller 1996 at 1746, Fig. 1.

194. Cann 1980 also discloses Densitometry as required by the claims of the Patents-in-Suit and one of ordinary skill in the art would have been motivated to combine those disclosures with Webber 686 because both discuss x-ray imaging using similar equipment and Cann 1980 adds a quantitative aspect. Cann 1980 discloses measuring vertebral mineral content using computed tomography to generate quantitative bone mass measurements, including density. Cann 1980 at 493. Cann 1980 acknowledges that Dual Energy techniques could be employed as discussed above. Cann 1980 at 493–494. Cann 1980 also presents a method for quantitatively determining bone density using phantoms to adjust the CT number. Cann 1980 at 494–496, 499.

CONTAINS HIGHLY CONFIDENTIAL INFORMATION

195. 180. The Fourth International Workshop on Bone and Soft Tissue Densitometry Using Computed Tomography was held in Fontevraud, France in 1984 and the Proceedings from the workshop were published in the Journal of Computer Assisted Tomography, vol. 9, pp. 602–645, 1985 ("Fontevraud 1984," PLANMECA009424–9426). As with Cann 1980, Fontevraud 1984 discloses using a quantitative computed tomography ("QCT") method for spinal mineral assessment specifically to determine bone mineral content, including direct density measurements (e.g., mineral equivalents of K_2HPO_4 in mg/cm^3). Fontevraud 1984 at 602. Fontevraud 1984 specifically contemplates that many of the advanced CT scanners in existence then could be modified for QCT measurements at very little cost and that the approach had already been implemented at 150 sites. Fontevraud 1984 at 602. That itself provides a motivation to one of skill in the art to modify the Webber 686 disclosures to include the Fontevraud 1984 method for quantitatively calculating bone density and to use such calculations in the display of digital images and for comparison.

196. "Quantitative CT Applications: Comparison of Current Scanners" published by Cann in Radiology, vol. 162, pp. 257-261, 1987 ("Cann 1987," PLANMECA009427–9431) further discloses that QCT could be used to measure bone density and describes several corrections to apply to increase the accuracy of such measurements. Cann 1987 at 257, 259–262. Both Cann 1987 and Webber 686

CONTAINS HIGHLY CONFIDENTIAL INFORMATION

describe imaging based on similar X-ray Equipment. Thus, one of ordinary skill in the art may have been motivated to modify the CT method described in Guenther 884 with the QCT methods disclosed in Cann 1987 to provide measurements and representations of quantitatively calculated bone density.

w) Tomographic Models

197. As discussed above, the Court construed Tomographic Models to require "merging information from multiple tomographic scans of an object to produce a representation of the subject/ said representation depicting quantitative density differences of the object scanned, which is created by the microprocessor in the controller using densitometry from at least one focal plane."

198. As discussed above with respect to Densitometry, it is my opinion that Osseo's interpretation of the Court's construction of densitometry is wrong. Nevertheless, under Osseo's interpretation, Webber 686 discloses Densitometry in the form of measurements of the radiographic intensity resulting from an x-ray scan of an object. Under the proper interpretation, use of Densitometry with the method of Webber 686 would be obvious in light of prior art densitometry methods and admissions by the inventor. Further, in my opinion, the Court's construction of Tomographic Model requires that the microprocessor combine densitometry information from multiple tomographic scans of the same region of an object. However, Osseo appears to be alleging that merging information from scans of

CONTAINS HIGHLY CONFIDENTIAL INFORMATION

different regions is sufficient to meet this claim element. I believe Osseo's interpretation is incorrect.

199. Webber 686 discloses merging information from multiple tomographic scans. For example, Webber's system obtains "simultaneous acquisition of multiple panoramic projections, each produced at a different angle," which are then merged via tomosynthetic processing to "obtain three-dimensional information." Webber 686 at 5:52–59.

200. Further, Webber 686 explains:

> Referring now to FIG. 3, the panoramic dental radiography system of the present invention will now be described. As shown in FIG. 3, panoramic radiography system 30 includes a plurality, here six, of vertical (orthogonal to the plane of the teeth) fan-shaped diverging beams 31a-31/, produced by a source 32. The beams 31 may be produced from a single source 32 using a six-way collimator, as is well known to those having skill in the art. As also shown in FIG. 3, a vertical detector array having a plurality, here six, of linear detectors 33a-33/, is positioned so that a respective one of the beams 31 impinges on a respective one of the detectors 33 after passing through the subject 39. For reference purposes, upper and lower rows of teeth 37 and 38 are also shown. As also shown, source 32 and detector 33 are rotated in a horizontal rotation path 34, about a vertical axis 35 which may run through the subject's spine. The system of FIG. 3 may be viewed as having a very narrow fan beam, resulting in a relatively wide region of sharp focus, so as to preclude significant blurring of malpositioned structures of diagnostic interest. Multiple exposures are taken at carefully selected angles, so that all areas of diagnostic interest are seen, and not obscured by superimposed images of irrelevant tissues in at least one projection. This results in a system that is characterized by multiple panoramic scans, each involving a different projection angle, to yield multiple, discrete, asymmetrical panoramic projections. By keeping track of the angles responsible for the resulting projections

CONTAINS HIGHLY CONFIDENTIAL INFORMATION

> relative to the position of the subject, it is possible to tomosynthetically synthesize the resulting two-dimensional projections into a true three-dimensional representation of the tissues.

Webber 686 at 7:49–8:14. After the tomosynthetic process described in Webber 686, the resulting three-dimensional image is a representation of the radiation attenuation by the object. Webber 686 at 5:52–59. That three-dimensional image is created by the microprocessor in the Controller. Webber 686 at Figs. 7–8, 10:10–23.

201. To the extent that Webber 686 does not disclose the claimed Tomographic Models, it would have been obvious to one of skill in the art to combine the disclosures of Webber 686 with prior art disclosing such Tomographic Models. Such prior art similarly deals with image processing and storage of models like Webber 686 and it would have been within the skill of one in the art to modify the equipment of Webber 686 to have the capability of storing Tomographic Models. As an example, Bisek 162 similarly uses an x-ray source and detector to send radiation through a patient and measure the attenuated radiation, which is further processed by a computer. Bisek 162 at 3:49–52. Bisek 162, however, describes sending radiation through an object at multiple energy levels so as to be able to calculate bone density and construct broad area images. Bisek 162 at Title, Abstract, 1:38–43; *see also* discussion below regarding Tomographic Models in the Bisek 162 Section.

CONTAINS HIGHLY CONFIDENTIAL INFORMATION

x) 3D

202. Certain claims require that the claimed models be three-dimensional. Webber 686 teaches three-dimensional models (i.e., the three-dimensional image generated by the disclosed tomosynthetic process). Specifically, Webber 686 teaches:

> The resulting multiple projections can be tomosynthetically processed to produce a three-dimensional image of tissues of diagnostic interest, free of image artifacts produced by irradiation of the spine.

Webber 686 at Abstract; *see also* Webber 686 at 5:58–59, 8:9–14.

y) Controller Storing Preexisting/Current Models

203. Webber 686 discloses that the Controller is adapted for storing multiple Tomographic Models including preexisting and current Tomographic Models that may be compared with the Controller. Specifically, Webber 686 acknowledges the diagnostic value of comparing pre-existing to current Tomographic Models:

> Finally, since theory and existing software have demonstrated that tomosynthetic data can be processed into any desired two-dimensional projection, tissue changes can be quantitatively obtained from careful comparison of existing panoramic radiographs and those produced according to the present invention.

Webber 686 at 9:5–10. *See also* Webber 686 at 9:29–35.

204. As discussed above, the Tomographic Models are stored in the Controller disclosed in Webber 686. *See* Webber 686 at 10:10–19.

CONTAINS HIGHLY CONFIDENTIAL INFORMATION

z) Comparing Models

205. As discussed above, the Controller disclosed in Webber 686 is adapted to compare a preexisting Tomographic Model and a current Tomographic Model.

3. Summary Regarding Webber 686

206. Below I summarize my opinions with respect to Webber 686.

207. With respect to the ’301 patent:

- Under Osseo’s interpretation of Densitometry and Tomographic Models, Webber 686 anticipates Asserted Claims 1–8 of the ’301 patent;
- Webber 686 renders obvious Asserted Claims 1–8 of the ’301 patent in view of Bisek 162, Mazess 445, Muller 1996, Cann 1980, Fontevraud 1984, and/or Cann 1987 with respect to Densitometry;
- Webber 686 also renders obvious asserted claim 5 of the ’301 patent in view of Mazess 445 and/or Bisek 162 with respect to Dual Energy;
- Webber 686 also renders obvious asserted claim 7 of the ’301 patent in view of DIMAXIS 1998, Mazess 445, Muller 1996, Lemchen 739, and/or Brummer 302 with respect to the Color Monitor; and
- Webber 686 also renders obvious asserted claim 8 of the ’301 patent in view of DIMAXIS 1998, Mazess 445, Muller 1996, Lemchen 739, and/or Brummer 302 with respect to the Color Printer.

208. With respect to the ’262 patent:

- Under Osseo’s interpretation of Densitometry and Tomographic Models, Webber 686 anticipates Asserted Claims 1, 2, 4 and 6 of the ’262 patent;
- Webber 686 renders obvious Asserted Claims 1, 2, 4, and 6 of the ’262 patent in view of Bisek 162, Mazess 445, Muller 1996,

CONTAINS HIGHLY CONFIDENTIAL INFORMATION

Cann 1980, Fontevraud 1984, and/or Cann 1987 with respect to Densitometry; and

- Webber 686 also renders obvious claim 3 of the ’262 patent (not charted by Osseo) in view of Franke 537 with respect to Intraoral Source.

209. With respect to the ’374 patent:

- Under Osseo’s interpretation of Densitometry and Tomographic Models, Webber 686 anticipates Asserted Claims 1–4, 6–10 and 12–24 of the ’374 patent;
- Webber 686 renders obvious Asserted Claims 1, 2, 4, and 6 of the ’374 patent in view of Bisek 162, Mazess 445, Muller 1996, Cann 1980, Fontevraud 1984, and/or Cann 1987 with respect to Densitometry;
- Webber 686 also renders obvious Asserted Claims 7, 17, 23 and 24 of the ’374 patent in view of Bisek 162, Mazess 445, and/or Franke 537 with respect to Cone Configuration; and
- Webber 686 also renders obvious Asserted Claims 8, 18, 22 and 24 of the ’374 patent in view of Bisek 162, Mazess 445, and/or Franke 537 with respect to Dual Energy.

B. Guenther 884 in Combination with Other Prior Art

1. Guenther 884

210. U.S. Patent No. 5,500,884 to Guenther *et al*. (“Guenther 884,” PlanmecaPA000034–044) was filed February 1, 1995, by Werner Guenther, Dieter Molitor, and Leonhard Werner, is assigned to Siemens Aktiengesellschaft, issued March 19, 1996, and is titled “Dental X-ray Diagnostic Installation for Producing Panorama X-ray Exposures of the Skull of a Patient.” Guenther 884 issued several years before the claimed priority date of December 1, 1999 and therefore is prior art to the Patents-in-Suit.

CONTAINS HIGHLY CONFIDENTIAL INFORMATION

2. Guenther 884 and Other Prior Art Applied to the Asserted Claims of the Patents-in-Suit

211. Below I describe how Guenther 884 anticipates and/or in combination with other specified prior art renders obvious the limitations of each asserted claim. I have reviewed the invalidity contentions served by Planmeca, including the chart identifying disclosures of Guenther 884 and, as necessary, other prior art against the claim limitations. I agree with that chart and attach it as **Exhibit 6** as further evidence in support of my opinion that Guenther 884 either alone, or in combination with the other identified references, anticipates or renders obvious each asserted claim. I reserve the right to rely on disclosures identified in **Exhibit 6** in addition to those listed below.

a) X-ray Equipment

212. Guenther 884 discloses the use of X-ray Equipment, including both an external x-ray source, for example, x-ray source 5 and an external detector array/sensor, for example, pick up unit 6 (which could be a CCD line sensor or other x-ray sensitive digital sensor and is also referred to as a digital image pick-up). Guenther 884 at 2:50–55; *see also* Guenther 884 at Abstract, Figs. 1–4, & 7–8, 1:9–12, 1:15–20, 5:15–21, claims 1–3, 13–14. Figure 1 illustrates the X-ray Equipment of Guenther 884:

CONTAINS HIGHLY CONFIDENTIAL INFORMATION

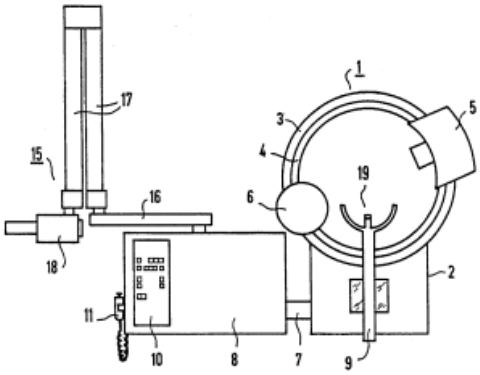

Guenther 884 at Fig. 1 (in part).

b) Intraoral Source

213. Claim 3 of the ’262 patent requires an intraoral source. Guenther 884 discloses the additional use of intra-oral exposures with an x-ray pick-up unit (film or sensor) to be placed intra-orally. Guenther 884 at 2:9–18, 3:38–41, claim 8. To one of ordinary skill in the art, that dynamic could be easily reversed with the source being placed intraorally, although that positioning would be less ideal due to the greater exposure of patient tissue to x-rays.

214. To the extent that Guenther 884 does not disclose the use of an intraoral source, such sources were known in the prior art. For example, Franke 537 discusses such prior art intraoral sources. Franke 537 at 1:16–21. To this end, Guenther states that the equipment in his basic installation can be augmented. Guenther 884 at 2:44-45, so the person of ordinary skill in the art could add the intraoral source of Franke 537 to the system of Guenther.

CONTAINS HIGHLY CONFIDENTIAL INFORMATION

c) Single Axis Rotation

215. Guenther 884 discloses that the x-ray source, for example, x-ray source 5, travels along a single axis and simultaneously rotates around the single axis. Guenther 884 characterizes its system as follows:

> A dental x-ray diagnostics installation for producing panorama x-ray exposures of the skull of a patient has a rotary unit and a positioning unit mounted so as to be pivotable boom-like around a horizontal axle shaft and are arranged so as to be fixable in individual swiveled positions. The individual swiveled positions thereby correspond to different physical sizes of a seated patient. For preparing an exposure, the positioning unit is first adjusted to the patient and the rotary unit is subsequently adjusted in a fixed allocation to the positioning unit.

Guenther 884 at Abstract, Fig. 1, 4:53–64. As described, the x-ray source travels along and can rotate around a single axis.

d) Restricted Beam Device

216. As further required by certain Asserted Claims, Guenther 884, in combination with other prior art, discloses the use of a Restricted Beam Device. The figures of Guenther 884 show that the sources 5 and 18 are collimated (restricted), as is standard in dental imaging systems. Guenther 884 Figures 1, 2, 3, 4, 7, and 8. To the extent that Guenther 884 does not disclose a restricted beam device, those of skill in the art would have found it obvious to adapt the X-ray Equipment disclosed in Guenther 884 to further include a restricted beam device. A restricted beam device enables more targeted x-ray radiation consistent with principles of reducing patient

CONTAINS HIGHLY CONFIDENTIAL INFORMATION

exposure to radiation. Adding a restricted beam device would not yield any unexpected or unpredictable results.

217. In addition, prior art disclosing such restricted beam devices use similar X-ray Equipment to that used in Guenther 884 with adaptations to restrict the beam originating from the x-ray source. For example, as discussed above, Webber 686 discloses the use of a Restricted Beam Device. *See* VIII.A.2.d).

218. As another example, Bisek 162 describes prior art restricted beam devices such as equipment that forms a narrowly collimated beam of radiation and/or fan beams. Bisek 162 at Fig. 1, 1:25–33, 5:59–65. Similarly, Muller 1996 describes a fan-beam collimation system, which is a Restricted Beam Device. Muller 1996 at Fig. 1, 1746.

e) Dual Energy

219. As discussed above, Guenther 884 in connection with other prior art discloses a Restricted Beam Device. The system of Guenther has a control unit 35 that has a microprocessor which controls, among other things, the x-ray sources. Guenther at 4:49–64. Given the goal of determining bone density, it would have been obvious for that Restricted Beam Device and computer-controlled x-ray system to further have been capable of dual energy levels. As demonstrated in the patents incorporated by reference into the Patents-in-Suit as exemplifying densitometry methods, it was known to use dual energy level devices to determine bone density.

CONTAINS HIGHLY CONFIDENTIAL INFORMATION

See, e.g., Bisek 162 at 1:34–43, 1:48–51, 6:9–18, 10:55–62; *see also* Mazess 445 at 1:59–2:3, 14:13–24; 17:30–60 (describing using dual energy devices in making bone density measurements).

220. Another example is found in prior art literature describing using computed tomography to make bone densitometry measurements. In Fontevraud 1984, Genant *et al*. describe using both single and dual energy computed tomography to quantity bone density using commercially available CT scanners, specifically referring to the GE CT/T 9800 scanner. I was a key contributor to the development of the GE CT/T 9800. When employing dual energy techniques, these commercially available CT scanners were equipped with Dual Energy Restricted Beam Devices. I personally used such devices in the 1980s.

221. Cann 1980 also exemplifies the use of dual energy techniques and equipment to measure bone density using computed tomography. Specifically, Cann 1980 describes a method for beam-hardening correction using dual-energy CT scans. Cann 1980 at 493. Such techniques rely on use of a Dual Energy Restricted Beam Device.

222. It was further known to those of skill in the art to use multiple beam computed tomography at multiple energy levels. *See, e.g.*, Webber 686 at 4:33–39.

223. Combining such prior art with Guenther 884 would therefore have been a natural design choice for one of skill in the art because all such art utilizes similar x-

CONTAINS HIGHLY CONFIDENTIAL INFORMATION

ray equipment and using a dual energy restricted beam device would incorporate known technology to quantify the attenuation of radiation through the object of interest.

f) Cone Configuration

224. Guenther 884, alone or in combination with one of the references discussed below, discloses that the x-ray source may emit an x-ray beam comprising a Cone Configuration. Guenther 884 uses an x-ray cone beam when the system makes an intra-oral exposure. Guenther 884 at 2:9–18, 3:34–40.

225. Bisek 162 recognizes that both fan-shaped beams and broad cone-shaped beams were known in the art. Bisek 162 at 1:25–28, 1:66–2:1.

226. Similarly, Mazess 445 describes using equipment similar to that disclosed in Guenther 884 to emit an x-ray beam in a cone configuration. Mazess 445 at 15:64–16:9 (". . . the x-ray source 322 projects a cone-beam of x-ray radiation . . .").

227. Franke 537 also exemplifies the cone configuration used in prior art systems. The shape is typically created by passing the x-ray beam through an aperture as shown in Figure 1:

CONTAINS HIGHLY CONFIDENTIAL INFORMATION

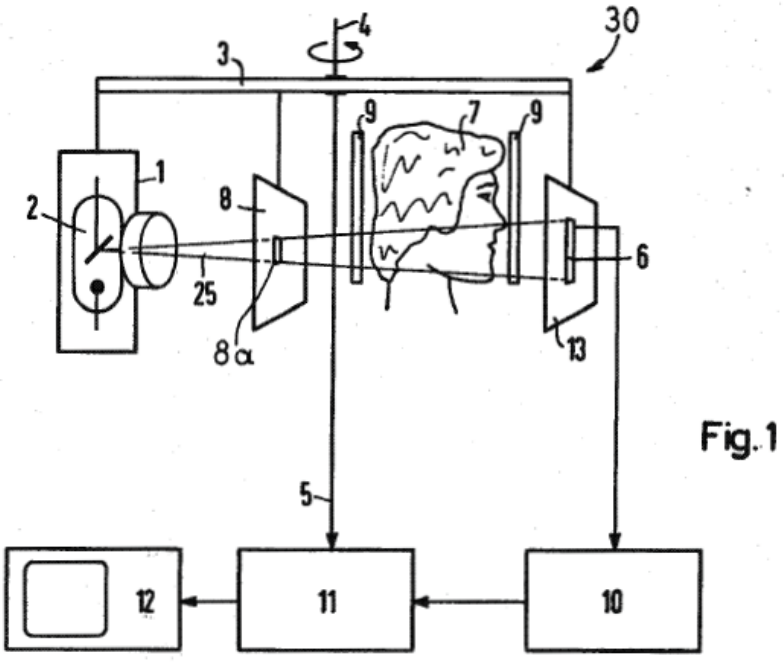

Franke 537 at Fig. 1; *see also* Franke 537 at Figs. 2–3, 3:61–64.

g) Input Device

228. Guenther 884 discloses an Input Device, for example, any one of keyboard 49, position sensors 41–45, or the disclosed x-ray sensitive sensor, that is connected to the microprocessor of the disclosed system. For example, Guenther 884 shows the inputs to the microprocessor in central control electronics 36 in Figure 7:

CONTAINS HIGHLY CONFIDENTIAL INFORMATION

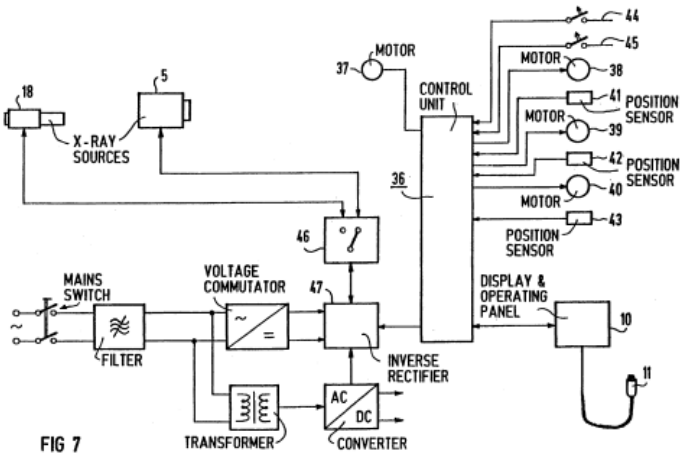

Guenther 884 at Fig. 7. Guenther 884 describes what is shown in Figure 7 as follows:

> FIG. 7 shows a block circuit diagram of the above described system. The control unit 35 contains central control electronics 36 having a ***microprocessor by means of which four adjustment motors 37-40 are controlled***. The first of these adjustment motors serves the purpose of tilting the overall rotary unit 1; the second initiates the rotation of the rotatable ring 4; the third effects the rotation of the film cassette; and the fourth serves for effecting the described swivel motion of the non-rotatable part of the ring in the horizontal plane. The adjustment motors are advantageously stepping motors. Position sensors 41-43 are provided, which obtain and supply information about the starting position, the rotary ring 4, the film cassette and the swiveled position of the rotary ring 4. These positional sensors can, for example, be formed as light barriers sensors. The non-use position as well as the user position of the rotary unit are acquired by sensors 44 and 45, which may be microswitches or light barriers; the different drive of the radiation sources 5 and 18 ensues with a switch-over unit 46 that connects the output of an inverse rectifier 47 to the radiation source 5 or 18, dependent on which x-ray apparatus is being utilized. The switching can ensue automatically based on signals from the sensors 44 and 45 or can be manually implemented.

Guenther 884 at 4:54–5:10 (emphasis added).

CONTAINS HIGHLY CONFIDENTIAL INFORMATION

229. Figure 8 of Guenther 884 shows the input keyboard 49:

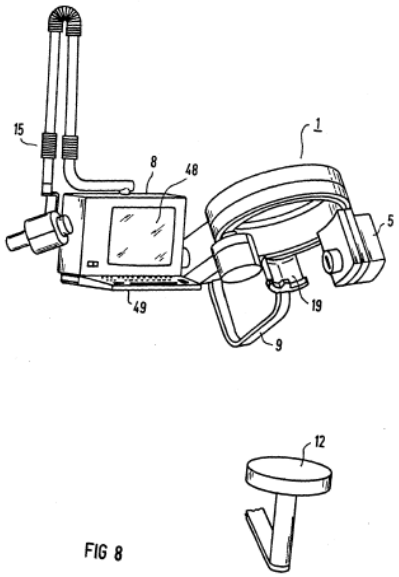

FIG 8

230. Guenther 884 describes Figure 8 as follows:

> FIG. 8 shows a further embodiment of the basic apparatus of the invention. In this version, the housing 8 contains a flat picture screen 48 at the front side and contains an input keyboard 49. Such a combination is advantageous particularly given an x-ray apparatus having digital image processing, wherein an x-ray-sensitive sensor having corresponding image processing is provided instead of a film cassette.

Guenther 884 at 5:15–21.

h) Dental Input Device

231. Guenther 884 also discloses a dental or orthopedic input device (e.g., x-ray apparatus) including an energy source (e.g., x-ray source 5) and an energy sensor (e.g., pick-up unit 6, which can be a CCD line sensor) where the sensor is placed with at least a portion of the patient's dental or orthopedic structure between. Guenther 884 describes how the patient is located between the equipment:

CONTAINS HIGHLY CONFIDENTIAL INFORMATION

> A dental x-ray diagnostics installation for producing panorama x-ray exposures of the skull of a patient has a rotary unit and a positioning unit mounted so as to be pivotable boom-like around a horizontal axle shaft and are arranged so as to be fixable in individual swiveled positions. The individual swiveled positions thereby correspond to different physical sizes of a seated patient. For preparing an exposure, the positioning unit is first adjusted to the patient and the rotary unit is subsequently adjusted in a fixed allocation to the positioning unit.

Guenther 884 at Abstract. Guenther 884 further shows this arrangement in Figures 1 (in part) and 2–4:

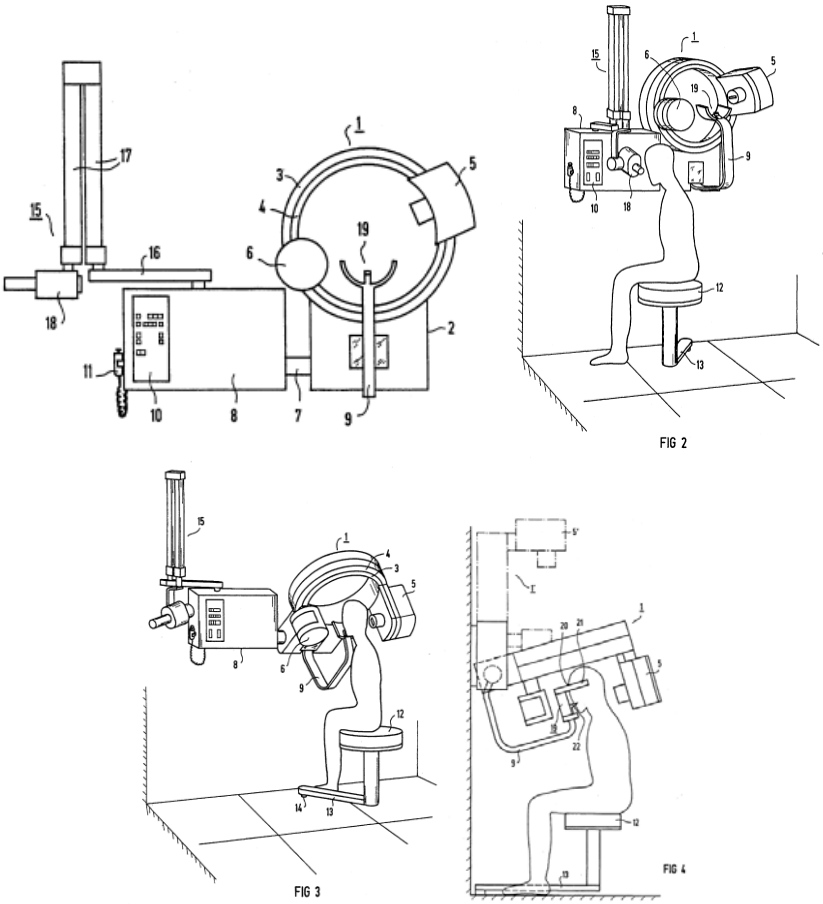

Guenther 884 at Figs. 1 (in part), and 2–4; *see also* Guenther 884 at Figure 8.

CONTAINS HIGHLY CONFIDENTIAL INFORMATION

232. As explained above with respect to the Input Device, the radiation detected at the pick-up unit 6 is used as an input to the microprocessor of the Controller. *See* Guenther 884 at 2:50–55 (discussing that the pick-up unit 6 may be a digital x-ray means such as a CCD sensor), 5:15–21 (discussing that the system may perform digital image processing "wherein an x-ray-sensitive sensor having corresponding image processing is provided instead of a film cassette").

i) Positioning Motor

233. Guenther 884 discloses the use of positioning motors connected to the microprocessor of the system that move in response to signals or commands from the microprocessor. Specifically, Guenther 884 describes motors 37–40 and drive 27, which together with control unit 35 control movement of the X-ray Equipment. *See* Guenther 884 at Figs. 5, 7, 4:7–20, 4:36–41, 4:48–5:10. Of particular note, Guenther 884 describes the drives and motors:

> A control unit 35 is also accommodated in the inside of the housing 8, this control unit 35 containing the electronics for driving the existing drives as well as for driving the two x-ray sources according to the block circuit diagram of FIG. 7. FIG. 7 shows a block circuit diagram of the above described system. The control unit 35 contains central control electronics 36 having a microprocessor by means of which four adjustment motors 37-40 are controlled. The first of these adjustment motors serves the purpose of tilting the overall rotary unit 1; the second initiates the rotation of the rotatable ring 4; the third effects the rotation of the film cassette; and the fourth serves for effecting the described swivel motion of the non-rotatable part of the ring in the horizontal plane. The adjustment motors are advantageously stepping motors. Position sensors 41-43 are provided, which obtain and supply

CONTAINS HIGHLY CONFIDENTIAL INFORMATION

> information about the starting position, the rotary ring 4, the film cassette and the swiveled position of the rotary ring 4. These positional sensors can, for example, be formed as light barriers sensors. The non-use position as well as the user position of the rotary unit are acquired by sensors 44 and 45, which may be microswitches or light barriers; the different drive of the radiation sources 5 and 18 ensues with a switch-over unit 46 that connects the output of an inverse rectifier 47 to the radiation source 5 or 18, dependent on which x-ray apparatus is being utilized. The switching can ensue automatically based on signals from the sensors 44 and 45 or can be manually implemented.

Guenther 884 at 4:48–5:10.

j) Three Axes

234. Guenther 884 discloses the claimed system with the Positioning Motor (e.g., motors 37–40 with drive 27) adapted for positioning the X-ray Equipment with respect to three axes of movement as required by claim 2 of the ’301 patent. As described and shown above, the X-ray Equipment of Guenther 884 is adapted to be positioned in each of the x, y, and z directions through use of control unit 35, which drives the Positioning Motors. Guenther 884 at Figs. 1–4, 7, 4:54–64.

k) Preprogrammed Scan Path

235. Guenther 884 further discloses that there is a Preprogrammed Scan Path programmed into the microprocessor as required by claim 6 of the ’301 patent. Specifically, Guenther 884 describes that central control electronics 36 have a microprocessor to control the four adjustment motors which control the rotation of the X-ray Equipment. Guenther 884 at 4:48–64. There is therefore equipment for a

CONTAINS HIGHLY CONFIDENTIAL INFORMATION

preprogrammed scan path in the Guenther 884 system, which will enable scanning around the patient's anatomy in a preprogrammed way to detect x-ray radiation through the portion of the anatomy being scanned.

l) Convertor

236. Guenther 884 discloses a Convertor, for example, the converter, that is connected to the microprocessor and converts a signal as shown in Figure 7. *See* Guenther 884 at Fig. 7. Guenther 884, as discussed above, further discloses that a digital x-ray detector could be used in the system such as a CCD line sensor, which is a detector array. Guenther 884 at 2:52–55, claim 13. This detector inherently has an analog-to-digital convertor.

237. Thus, Guenther 884 also discloses that the Convertor could be an analog-to-digital convertor as further required by claim 3 of the '301 patent.

m) Conversion Means

238. Guenther 884 as disclosed above discloses a Convertor, which is sufficient to also disclose the conversion means requirements of claim 1 of the '301 patent. Guenther 884 further discloses the use of a Merger Device as discussed below, which is connected to an analog-to-digital convertor and the microprocessor and thus sufficient to meet the requirements of claim 4 of the '301 patent.

CONTAINS HIGHLY CONFIDENTIAL INFORMATION

n) Merger Device

239. Guenther 884 inherently discloses a Merger Device connected to the analog-to-digital converter and to the microprocessor. As discussed above with respect to the Converter, Guenther 884 contemplates using a digital x-ray detector. Guenther 884 at 2:52–55. The system also has an "image evaluation means for digitally processing signals." Guenther 884 at claim 13. One of skill in the art would understand that a Merger Device is inherent in such a digital system, for example in a similar manner to how signals from multiple position sensors are merged in the control unit as shown in Figure 7 in order to merge signals received based on dual energy levels. *See also* Guenther 884 at 5:11–21.

o) Controller

240. Guenther 884 also discloses a Controller, specifically, control unit 35, central control electronics 36 or the computer, each which includes a microprocessor (e.g., microprocessor (part of central control electronics 36)) and a memory device (inherent to the Controller) connected to the microprocessor. *See* Guenther 884 at Fig. 7 (showing central control electronics 36 including the control unit), Fig. 8 (showing computer within housing 8). Guenther 884 describes it as follows:

> A control unit 35 is also accommodated in the inside of the housing 8, this control unit 35 containing the electronics for driving the existing drives as well as for driving the two x-ray sources according to the block circuit diagram of FIG. 7. FIG. 7 shows a block circuit diagram of the above described system. The control unit 35 contains central

CONTAINS HIGHLY CONFIDENTIAL INFORMATION

> control electronics 36 having a microprocessor by means of which four adjustment motors 37-40 are controlled.

Guenther 884 at 4:48–57. Guenther further describes that the housing 8 (which comprises the computer) could be combined with digital image processing, which inherently requires a microprocessor and memory to store the digital images. Guenther 884 at 5:11–21, claim 13.

241. The Controller disclosed further includes means for storing and/or is adapted for storing Tomographic Models as required by claim 1 of the ’301 patent and the independent claims of the ’374 patent. Specifically, Guenther 884 contemplates digital imaging processing where digital images would need to be stored in the Controller. *See, e.g.*, Guenther 884 at claim 13. As discussed below, the digital panoramic images either are Tomographic Models or it would be obvious to use the Guenther 884 system to store Tomographic Models in combination with other prior art disclosures. Guenther 884 does not contemplate or require the use of fiducial markers.

p) Computer

242. Guenther 884 discloses that the Controller could be a Computer which includes a digital memory storing patient densitometry information (inherent to the control unit 35 or computer), specifically, Guenther 884 discloses control unit 35, which could be a computer. Guenther 884 at 4:48–57, claim 13. Guenther 884

CONTAINS HIGHLY CONFIDENTIAL INFORMATION

further discloses that the Computer includes an input, specifically keyboard 49, position sensors 41–45, or an x-ray sensitive sensor), and output, specifically display 48 or the described image display, as required by claim element 1(b) of the ’262 patent. Guenther 884 at Figs. 7–8, claims 13–14.

q) Imaging Software

243. Guenther 884 discloses imaging software associated with the Computer as required by claim element 1(h) of the ’262 patent. Specifically, Guenther 884 discloses that the x-ray apparatus disclosed could be used with digital image processing, which inherently requires imaging software. Guenther 884 at 5:15–21, claim 13. One of skill in the art would have been familiar with imaging software to perform digital image processing as of the date that Guenther 884 was filed.

r) Output Device

244. Guenther 884 discloses an Output Device, specifically, display or flat picture screen 48 or image display. Guenther 884 at 5:15–21, claims 1, 13–14. That Output Device is connected to the microprocessor and the Computer output (as described above). *See, e.g.*, Fig. 8. The Output Device disclosed is further adapted for receiving a Tomographic Model (e.g., the panoramic tomogram or digital image) from the microprocessor. Guenther 884 at claim 13.

245. As further required by claim 1 of the ’262 patent, the Output Device disclosed in Guenther 884 communicates Densitometry model comparison information.

CONTAINS HIGHLY CONFIDENTIAL INFORMATION

Specifically, the Output Device disclosed in Guenther 884 displays the panoramic tomograms or digital images produced by the methods disclosed in Guenther 884. As discussed below, those tomograms or digital images may communicate Densitometry model comparison information or, such would be obvious in light of other prior art in existence before and at the time of the filing of the Patents-in-Suit.

246. For example, Bisek 162 uses similar X-ray Equipment to that used in Guenther 884 and a Display to show the images generated by the computer processing of the signals received from the imaging equipment. Bisek 162 at 1:34–43, 6:50–55, 6:59–63. As disclosed in Bisek 162, the images being shown on display terminal 58 are created using Densitometry methods and demonstrate Densitometry model comparison information (changes in density at various locations of the representations of the object scanned). Bisek 162 at Title, 3:49–51, 6:51–63.

247. As another example, Mazess 445 similarly describes using an Output Device to illustrate Densitometry model comparison information (changes in density at various locations of the representations of the object scanned). Mazess 445 at Figs. 1–3, 20, 25, 1:36–43, 4:22–34 (video monitor), 16:1–4, 20:46–63 (describing ability to produce a bone mineral density value at each pixel of the image(s) displayed on computer 314).

CONTAINS HIGHLY CONFIDENTIAL INFORMATION

s) Display

248. Guenther 884 further discloses the use of a Display (display 48, image display, flat picture screen 48) as part of the Output Device. Guenther 884 at Fig. 8, 5:15–21, claims 1, 13–14. That Display displays information pertaining to the Densitometry model as discussed above regarding the Output Device and below regarding Densitometry.

t) Color Monitor

249. Guenther 884, either alone or in combination with other prior art references specified below or the knowledge of one skilled in the art, discloses a Color Monitor—one adapted to receive the tomographical densitometry model output color-coded to represent densitometry. As discussed above, Guenther 884 discloses the use of a Display associated with a Computer to output the panoramic tomograms or digital images produced by the methods disclosed in Guenther 884. At the time of the filing of the Patents-in-Suit, it was known that such Displays could output images in color.

250. Moreover, it was known in the art that images/models could be color-coded. For example, the Planmeca DIMAXIS 1998 discusses pseudo-coloring of images. DIMAXIS 1998 at 18, 51.

251. It further would have been obvious to combine Guenther 884 disclosures with other references disclosing similar imaging systems and/or use displays to show

CONTAINS HIGHLY CONFIDENTIAL INFORMATION

images that were color-coded to represent Densitometry and thus meet the Color Monitor requirement.

252. For example, Mazess 445 describes a video monitor on which images are processed and displayed to show bone mineral density values, including using image recognition type techniques and other techniques such as texture analysis. It was known in the art that these techniques included color-coding and the images of Mazess 445 contain Densitometry information, which could be color-coded. Mazess 445 at Figs. 1–3, 20, 25; 1:36–43; 4:22–34; 16:1–4; 20:46–63.

253. As another example, the article Muller 1996 discusses using Gouraud shading to create a realistic representation of the bone being imaged. Gouraud shading was known in the art as a method to simulate the differing effects of light and color across the surface of an object. Muller 1996 at 1746; Fig. 1. Muller 1996 used three-dimensional peripheral quantitative computed tomography (3D-pQCT) and an analysis of bone density to create the images shown and described. Muller 1996 at Abstract.

254. Lemchen 739 describes a prior art CSPECT display terminal 26 that displays a color-shaded image of combined CT and Single Photon Emission Computed Tomographic ("SPECT") data that may be printed to a color laser printer 28. Lemchen 739 at 2:19–26. The invention described in Lemchen 739 builds on this prior art and incorporates color-coding of images (including those generated from

CONTAINS HIGHLY CONFIDENTIAL INFORMATION

an x-ray exposure and detection system, three dimensional contours scanning system, and a surface image scanning system and composite images from all of the systems) and display on monitor 16. Lemchen 739 at 4:43–52; 6:28–32, 6:58–7:4, 7:13–24, 8:28–34, 8:62–9:9. Lemchen therefore discloses a Color Monitor.

255. Brummer 302 describes 3-D visualization techniques to take 2-D images from object scans and create 3D images while retaining the "color-coded intensity values." Brummer 302 at 3:30–35, 3:39–42. Brummer 302 describes an image display which could either be a CRT or a liquid crystal display (LCD) screen and notes that a "sophisticated implementation may modulate the color of each point in the objects visualized." Brummer 302 at 8:28–34, 11:6–11, 15:5–17. Although Brummer 302 preferentially discusses applying such 3D visualization techniques to MRI images, Brummer 302 also mentions x-ray computed tomography from which the Brummer 302 techniques could be similarly applied. Brummer 302 at 2:38–44.

u) Color Printer

256. Guenther 884, in combination with one or more of the references discussed below, discloses a Color Printer—one adapted to print images color-coded to correspond to the Densitometry of the Tomographic Models. As discussed above, Guenther 884, either alone or in combination, discloses a Color Monitor to display Tomographic Models color-coded to correspond to the Densitometry of the Tomographic Models. It would have been natural for one of skill in the art to include

CONTAINS HIGHLY CONFIDENTIAL INFORMATION

a color printer with such a system to enable printing of the color-coded Tomographic Models.

257. In addition, other prior art makes clear that printers were routine parts of imaging systems in order to record on paper the images created. For example, Guenther 038 (issued with the same listed inventor) acknowledges that a printer could be added to the described imaging system. Guenther 038 at 2:52–56. Mazess 445 also discusses using compact digital printers in imaging systems. Mazess 445 at 1:45–51.

258. Likewise, as discussed above, Lemchen 739 acknowledges that a color laser printer could be used to print the color-coded images. Lemchen 739 at 2:19–26.

259. The Planmeca DIMAXIS Imaging Software User's Manual also contemplated printing pseudo-colored images using a printer. DIMAXIS 1998 at 4, 18, 51.

v) Densitometry

260. The Court construed "densitometry" to mean "quantitatively calculated bone density."

261. Guenther 884, alone, does not disclose quantitatively calculating bone density under my interpretation of that requirement. However, Osseo appears to be alleging that any calculation to convert analog signals representing the linear attenuation of x-rays through an object is sufficient to satisfy the Densitometry requirement under the Court's construction. I strongly disagree with Osseo's position. Nevertheless,

CONTAINS HIGHLY CONFIDENTIAL INFORMATION

under Osseo's interpretation, Guenther 884 discloses Densitometry because it discloses calculations to produce tomograms that, according to Osseo's interpretation, quantify the attenuation of radiation through the object being scanned. Guenther 884 at Figs. 7–8, 1:44–46, 4:48–57, 5:11–21, claims 1, 13–14 (discussing processing of information obtained using X-ray Equipment to produce images). Likewise, the image produced by the Guenther 884 method disclosed would meet the Densitometry model limitations of the Asserted Claims under Osseo's interpretation.

262. However, in combination with other prior art using similar X-ray Equipment to Guenther 884, Guenther 884 discloses quantitatively calculating bone density. *See* Guenther 884 at Figs. 7–8, 4:48–57, 5:11–21, claims 1, 13–14 (discussing processing of information obtained using X-ray Equipment to produce images). It would have been obvious to one of skill in the art to combine the image processing method described Guenther 884 with Densitometry methods disclosed by other prior art references to generate Densitometry models or obtain patient Densitometry information. Prior art describing Densitometry methods use the same or similar x-ray equipment to that used in Guenther 884. Also, both densitometry methods and the image processing method of Guenther 884 use radiographic intensity data to gain information or generate an image about the object scanned.

CONTAINS HIGHLY CONFIDENTIAL INFORMATION

263. The Patents-in-Suit themselves acknowledge prior art densitometry methods were exemplified in U.S. Patent No. 5,838,765; Pelc 080; and Bisek 162. '301 patent at 2:1–6. Bisek 162 and its application to the Asserted Claims is described in detail below. Further, the inventor, Dr. Massie, admitted in deposition that his "idea" was merely to use prior art densitometry methods and apply them in a dental application. Massie Tr. at 20:22–21:7; 22:15–23, 66:16–67:6.

264. As another example, the Guenther 884 disclosures could be combined with the densitometry disclosures of Mazess 445 to generate Densitometry models, provide Densitometry model comparison information, and obtain patient Densitometry information. Mazess 445 is titled "Densitometry Adapter for Compact X-ray Fluoroscopy Machine" and discusses how to perform the "necessary correction of images for the quantitative accuracy needed for bone densitometry." Mazess 445 at Abstract; *see also* Figs. 1–3, 20, 25 (showing the X-ray Equipment used and as to Figure 20, how the data is processed to generate an image), 16:1–4. Specifically, Mazess 445 describes how to quantitatively calculate bone density:

> The images are then processed according to well understood techniques to produce a bone mineral density value at process block 428. This bone mineral density value indicates the amount of bone material at each pixel of the image largely independent of surrounding soft tissue. The pixel image may be analyzed in a number of methods but most simply, as indicated by process block 430, by defining either automatically or manually a desired region of interest within the image and making a measurement of total bone density within that region. Automated techniques may look for a local maximum or minimum of

CONTAINS HIGHLY CONFIDENTIAL INFORMATION

> bone density or may use image recognition type techniques to locate reproducibly a particular region of the forearm or os calcis. Morphometric analysis may be applied to the image to detect bone fracture and other techniques such as texture analysis may be performed according to methods well known in the art. The results of the analyses and images so processed may be displayed by the computer 314.

Mazess 445 at 20:46–63. The combination with Guenther 884 would produce densitometric tomograms.

265. Muller 1996 further uses similar X-ray Equipment to that of Guenther 884 and also discloses imaging using 3D-pQCT to determine bone density in vivo. Muller 1996 at 1746, Fig. 1.

266. Cann 1980 also discloses Densitometry as required by the claims of the Patents-in-Suit and one of ordinary skill in the art would have been motivated to combine those disclosures with Guenther 884 because both discuss x-ray imaging using similar equipment, both are tomographic, and Cann 1980 adds a quantitative aspect. Cann 1980 discloses measuring vertebral mineral content using computed tomography to generate quantitative bone mass measurements, including density. Cann 1980 at 493. Cann 1980 acknowledges that Dual Energy techniques could be employed as discussed above. Cann 1980 at 493–494. Cann 1980 also presents a method for quantitatively determining bone density using phantoms to adjust the CT number to correct for "significant inaccuracies in the calculated CT numbers" that the conventional CT images suffer from. Cann 1980 at 494–496, 499. Cann 1980

CONTAINS HIGHLY CONFIDENTIAL INFORMATION

also discloses comparing multiple densitometry models. Specifically, Cann 1980 states that "Short-term variability in the calculated mineral content is obtained from scanning the excised spine repeatedly and analyzing the data using the techniques outlined" and "The results from the series of scans taken over a several month period are given in Table 1." Cann 1980 at 497.

267. Similarly, Fontevraud 1984 discloses using a quantitative computed tomography method for spinal mineral assessment specifically to determine bone mineral content, including direct density measurements (e.g., mineral equivalents of K_2HPO_4 in mg/cm^3). Fontevraud 1984 at 602. Fontevraud 1984 specifically contemplates that many of the advanced CT scanners in existence then could be modified for QCT measurements at very little cost and that the approach had already been implemented at 150 sites. Fontevraud 1984 at 602. That itself provides a motivation to one of skill in the art to modify the Guenther 884 disclosures to include the Fontevraud 1984 method for quantitatively calculating bone density and to use such calculations in the display of digital images and for comparison.

268. Cann 1987 further discloses that QCT could be used to measure bone density and describes several corrections to apply to increase the accuracy of such measurements. Cann 1987 at 257, 259–262. Both Cann 1987 and Guenther 884 describe imaging based on similar X-ray Equipment using computed tomography. Thus, one of ordinary skill in the art may have been motivated to modify the

CONTAINS HIGHLY CONFIDENTIAL INFORMATION

tomographic method described in Guenther 884 with the QCT methods disclosed in Cann 1987 to provide measurements and representations of quantitatively calculated bone density.

w) Tomographic Models

269. As discussed above, the Court construed Tomographic Models to require "merging information from multiple tomographic scans of an object to produce a representation of the subject/ said representation depicting quantitative density differences of the object scanned, which is created by the microprocessor in the controller using densitometry from at least one focal plane."

270. As discussed above with respect to Densitometry, it is my opinion that Osseo's interpretation of the Court's construction of Densitometry is wrong. Nevertheless, under Osseo's interpretation, Guenther 884 discloses Densitometry in the form of measurements of the radiographic intensity resulting from an x-ray scan of an object. Under the proper interpretation, use of Densitometry with the method of Guenther 884 would be obvious in light of prior art Densitometry methods and admissions by the inventor.

271. Guenther 884 discusses merging information to create a panoramic tomogram of the patient's dental structure from multiple focal planes, including through digital image processing, which inherently requires the storing of such digital images in for example, the attached Computer. Guenther 884 at 2:46–61 (turning the x-ray source

CONTAINS HIGHLY CONFIDENTIAL INFORMATION

and x-ray detector so that it orbits the patient's head), 5:15–21, claims 1, 13–14. Particularly, in combination with prior art disclosing Dual Energy Densitometry methods as described above, it would have been obvious to one of skill in the art to modify this Guenther 884 method to include merging information from multiple tomographic scans (e.g., at different energy levels) in order to produce a Tomographic Model that uses Densitometry information to construct the model.

272. Such prior art similarly deals with image processing and storage of models like those of Guenther 884 and it would have been within the skill of one in the art to modify the equipment of Guenther 884 to have the capability of storing Tomographic Models. As an example, Bisek 162 similarly uses an x-ray source and detector to send radiation through a patient and measure the attenuated radiation, which is further processed by a computer. Bisek 162 at 3:49–52. Bisek 162 further describes sending radiation through an object at multiple energy levels so as to be able to calculate bone density and construct broad area images that are inherently stored in computer 56. Bisek 162 at Title, Abstract, Fig. 1, 1:38–43, 6:51–63.

273. As another example, U.S. Patent No. 4,823,369 to Guenther *et al*. ("Guenther 369," filed December 31, 1987 and issued April 18, 1989 (PlanmecaPA000143–147)) lists the same inventor as Guenther 884 and therefore illustrates the state of the art prior to the issuance of Guenther 884. Guenther 369 discloses image memory designed to store images. *See* Guenther 369 at Abstract, Fig. 2 (image memory 10),

CONTAINS HIGHLY CONFIDENTIAL INFORMATION

1:35–42, 2:50–64, 3:15–22. As exemplified in Guenther 369, it was known in the art to store images or processed image data in memory devices and therefore it would have been a natural design choice to include memory devices within a system designed to generate Tomographic Models.

x) 3D

274. Certain claims require that the claimed models be three-dimensional. Guenther 884 teaches digital image processing but does not explicitly address three-dimensional models. It would have been obvious for one of skill in the art to combine the method disclosed in Guenther 884 with additional processes disclosed in the art to generate a three-dimensional model because it was known that computed tomography and tomosynthesis methods could be represented on a slice or single focal plane two-dimensional basis or combined to form a three-dimensional image or model. Other than additional software required to perform the additional computer processing to take two-dimensional data and combine to create a three-dimensional representation, no change to the equipment of Guenther 884 would have been required.

275. Webber 686 is an example of such prior art that discloses the 3D requirement of the Asserted Claims. Webber 686 teaches three-dimensional models (i.e., the three-dimensional image generated by the disclosed tomosynthetic process). Specifically, Webber 686 teaches:

CONTAINS HIGHLY CONFIDENTIAL INFORMATION

> The resulting multiple projections can be tomosynthetically processed to produce a three-dimensional image of tissues of diagnostic interest, free of image artifacts produced by irradiation of the spine.

Webber 686 at Abstract; *see also* Webber 686 at 5:58–59, 8:9–14.

276. As another example, Brummer 302 uses 3D computer graphics techniques to represent computed tomography information in three dimensions:

> Apparatuses, methods and computer program products for scan plane geometry definition in tomographic data acquisition via an interactive three-dimensional (3-D) graphical operator interface. The apparatuses, methods and computer program products are initially proposed for use in cardiac MRI, but have a much broader area of application. The apparatuses and methods utilize 3-D computer graphics aspect views of slice planes to show a new scan, represented as semi-transparent uniformly-colored planes. Intersections of these planes with opaque texture-mapped gray-level views of previously acquired images enable the orientation of a new scan to be viewed in a much more intuitive fashion. Advantageously, the apparatuses and methods of the present invention provide for more efficient elimination of positional ambiguity that is often associated with conventional 2-D intersection line views. In addition, any misregistration between localizer scans can be detected immediately in the integrated 3-D display by misalignment of anatomy in the previously acquires image planes.

Brummer 302 at Abstract; *see also* Brummer 302 at Figs. 2–4, 1:18–22, 3:30–64, 4:5–13. Although Brummer 302 focuses on use of such techniques with information derived from MRIs to generate 3D models, it acknowledges that the same techniques could be used with other imaging systems. Brummer 302 at 1:43–48. It would have been natural for one of skill in the art to take the two-dimensional digital image

CONTAINS HIGHLY CONFIDENTIAL INFORMATION

processing of Guenther 884 and augment to generate three-dimensional models as a way to represent more information to the user.

277. Brummer 302 is further discussed in greater detail below in Section VIII.D.

278. Muller 1996 also discloses the 3D requirement, specifically, use of 3D-pQCT to generate models of bone structure. Muller 1996 at Abstract, Fig. 1, 1746.

y) Controller Storing Preexisting/Current Models

279. Guenther 884, in combination with the prior art discussed above with respect to Tomographic Models or the prior art discussed in this section, discloses that the Controller is adapted for storing multiple Tomographic Models including preexisting and current Tomographic Models that may be compared with the Controller. Guenther 884 discloses that digital image processing could be used. Guenther 884 at 5:15–21. Such processing inherently requires storing the generated digital images, which either are or could be modified to be Tomographic Models. Further, the inventor readily admitted comparing preexisting and current models of dental structure was known in the art prior to the claimed invention. Massie Tr. at 68:10–21. While the inventor referenced x-ray films, it evidences the inherent need for a dentist to compare prior models of a patient's dental structure to current models and the need to store such models. Storage of such models was within the knowledge of one of skill in the art at the time of the claimed invention as evidenced by the art discussing generation of such Tomographic Models.

CONTAINS HIGHLY CONFIDENTIAL INFORMATION

280. For example, Brummer 302 discusses the ability to compare an image produced from a prior scan to a new scan, thus requiring storage of both pre-existing and current Tomographic Models. Brummer 302 at Abstract, Figs, 2–4 (indicating storage of images and image models), 4:25–38, 4:54–5:3, 11:49–65, claims 8, 14.

281. Mazess 445 also discloses the ability to compare a preexisting Tomographical Model (e.g., image 86) to a current Tomographical Model (e.g., image 86′). Mazess 445 at 7:16–27, 18:24–32 (discussing computer memory to process and store images), 20:46–63 (discussing density calculations).

282. Similarly, Guenther 369 describes image memory designed to store images, which could be modified to include the claimed Tomographic Models for the reasons discussed above. Guenther 369 at Fig. 2 (image memory 10 associated with computer 13), 1:39–42, 2:50–64. It would have been obvious to combine the disclosures of Guenther 884 with Guenther 369 because both use similar X-ray Equipment and list the same inventor.

z) Comparing Models

283. As discussed above for the Controller Storing Preexisting/Current Models, the Controller disclosed in Guenther 884, including as modified by other prior art such as Brummer 302 and Mazess 445, is adapted to compare a preexisting Tomographic Model and a current Tomographic Model. Cann 1980 also discloses comparing multiple Densitometry models. Specifically, Cann 1980 states that "Short-term

CONTAINS HIGHLY CONFIDENTIAL INFORMATION

variability in the calculated mineral content is obtained from scanning the excised spine repeatedly and analyzing the data using the techniques outlined" and "The results from the series of scans taken over a several month period are given in Table 1." Cann 1980 at 497.

284. In addition, Webber 686 contemplates diagnostic comparison of images, including preexisting images to current images created pursuant to the method disclosed in Webber 686. Webber 686 at 9:5–10, 9:29–35. As discussed above, it would have been obvious to modify the disclosures of Guenther 884 with those in Webber 686 because one of skill in the art would recognize that both references utilize similar X-ray equipment to achieve a similar purpose—imaging of a patient's dental structures for diagnostic purposes. *See* Guenther 884 at Abstract; Webber 686 at 4:59–61, 9:5–10.

3. Summary Regarding Guenther 884

285. Below I summarize my opinions with respect to Guenther 884.

286. With respect to the '301 patent:

- Under Osseo's interpretation of Densitometry and Tomographic Models, Guenther 884 anticipates Asserted Claims 1–8 of the '301 patent;
- Guenther 884 renders obvious Asserted Claims 1–8 of the '301 patent in view of Bisek 162, Mazess 445, Muller 1996, Cann 1980, Fontevraud 1984, and/or Cann 1987 with respect to Densitometry;

CONTAINS HIGHLY CONFIDENTIAL INFORMATION

- Guenther 884 also renders obvious Asserted Claims 1–8 of the ’301 patent in view of Brummer 302, Mazess 445, and/or Guenther 369 with respect to Storing Tomographic Models;
- Guenther 884 also renders obvious Asserted Claims 1–8 of the ’301 patent Bisek 162 and Mazess 445 with respect to Output Device;
- Guenther 884 also renders obvious asserted claim 5 of the ’301 patent in view of Webber 686, Mazess 445, Bisek 162, Cann 1980 and/or Fontevraud 1984 with respect to Restricted Beam and Dual Energy;
- Guenther 884 also renders obvious asserted claim 7 of the ’301 patent in view of DIMAXIS 1998, Mazess 445, Muller 1996, Lemchen 739, and/or Brummer 302 with respect to the Color Monitor; and
- Guenther 884 also renders obvious asserted claim 8 of the ’301 patent in view of DIMAXIS 1998, Mazess 445, Muller 1996, Lemchen 739, and/or Brummer 302 with respect to the Color Printer.

287. With respect to the ’262 patent:

- Under Osseo’s interpretation of Densitometry and Tomographic Models, Guenther 884 renders obvious Asserted Claims 1, 2, 4 and 6 of the ’262 patent in view of Brummer 302, Mazess 445, Cann 1980, and/or Webber 686 with respect to Comparing Models;
- Guenther 884 also renders obvious Asserted Claims 1, 2, 4, and 6 of the ’262 patent in view of Bisek 162, Mazess 445, Muller 1996, Cann 1980, Fontevraud 1984, and/or Cann 1987 with respect to Densitometry;
- Guenther 884 also renders obvious Asserted Claims 1, 2, 4 and 6 of the ’262 patent in view of Brummer 302, Mazess 445, and/or Guenther 369 with respect to Storing Densitometry Models;
- Guenther 884 also renders obvious Asserted Claims 1, 2, 4 and 6 of the ’262 patent in view of Bisek 162 and Mazess 445 with respect to Output Device; and

CONTAINS HIGHLY CONFIDENTIAL INFORMATION

- Guenther 884 also renders obvious Asserted Claim 3 of the ’262 patent (not charted by Osseo) in view of Franke 537 with respect to Intraoral Source.

288. With respect to the ’374 patent:

- Under Osseo’s interpretation of Densitometry and Tomographic Models, Guenther 884 anticipates asserted claims 1–4 and 7–10 of the ’374 patent;
- Guenther 884 renders obvious Asserted Claims 1–4 and 7–10 of the ’374 patent in view of Bisek 162, Mazess 445, Muller 1996, Cann 1980, Fontevraud 1984, and/or Cann 1987 with respect to Densitometry;
- Guenther 884 also renders obvious Asserted Claims 1–4 and 7–10 of the ’374 patent in view of Webber 686, Bisek 162 and/or Muller 1996 with respect to Restricted Beam;
- Guenther 884 also renders obvious Asserted Claims 6 and 12–24 in view of Brummer 302, Mazess 445, Cann 1980, and/or Webber 686 with respect to Comparing Models;
- Guenther 884 also renders obvious Asserted Claims 7, 17, 23 and 24 of the ’374 patent in view of Bisek 162, Mazess 445, and/or Franke 537 with respect to Cone Configuration; and
- Guenther 884 also renders obvious Asserted Claims 8, 18, 22 and 24 of the ’374 patent in view of Bisek 162, Mazess 445, Cann 1980, and/or Franke 537 with respect to Dual Energy; and
- Guenther 884 also renders obvious Asserted Claims 1–4, 6–10, and 12–24 of the ’374 patent in view of Brummer 302, Mazess 445, and/or Guenther 369 with respect to Storing Tomographic Models.

C. Mazess 445 in Combination with Other Prior Art

1. Mazess 445

289. U.S. Patent No. 6,315,445 to Mazess *et al.* (“Mazess 445,” PlanmecaPA000312–337) was filed December 21, 2000 claiming priority as a division of application No. 09/281,518 on March 30, 1999 and ultimately to a

CONTAINS HIGHLY CONFIDENTIAL INFORMATION

provisional application filed on February 21, 1996 by Richard B. Mazess, David L. Ergun, and Joseph P. Bisek. Both Richard B. Mazess and Joseph P. Bisek are also listed inventors on Bisek 162, which is referenced above and discussed in greater detail below. Mazess 445 was titled "Whole-Body Dual-Energy Bone Densitometry Using a Narrow Angle Fan Beam to Cover the Entire Body in Successive Scans" and issued March 23, 1999. Based on its earlier priority date(s), Mazess 445 is prior art to the Patents-in-Suit.

2. Mazess 445 and Other Prior Art Applied to the Asserted Claims of the Patents-in-Suit

290. Below I describe in summary how Mazess 445 anticipates and/or in combination with other specified prior art renders obvious the limitations of each asserted claim. I have reviewed the invalidity contentions served by Planmeca, including the chart identifying disclosures of Mazess 445 and, as necessary, other prior art against the claim limitations. I agree with that chart and attach it as **Exhibit 7** as further evidence in support of my opinion that Mazess 445 either alone, or in combination with the other identified references, anticipates or renders obvious each asserted claim. I reserve the right to rely on disclosures identified in **Exhibit 7** in addition to those listed below.

CONTAINS HIGHLY CONFIDENTIAL INFORMATION

a) X-ray Equipment

291. Mazess 445 generally describes modifying fluoroscopy equipment to support an x-ray source held in opposition to an electronic image detector to allow x-ray imaging and notes that the functionality of such X-ray Equipment was well known in the prior art. Mazess 445 at 1:28–31, 4:49–53.

292. Mazess 445 therefore discloses the use of X-ray Equipment, including specifically both an x-ray source, for example, x-ray tube 68 or x-ray source 322, and a detector array, for example, CCD camera 84, the image intensifier, or independent detector array 360.

293. Figure 6 depicts examples of such X-ray Equipment (x-ray tube 68, image intensifier 82, and CCD camera 84):

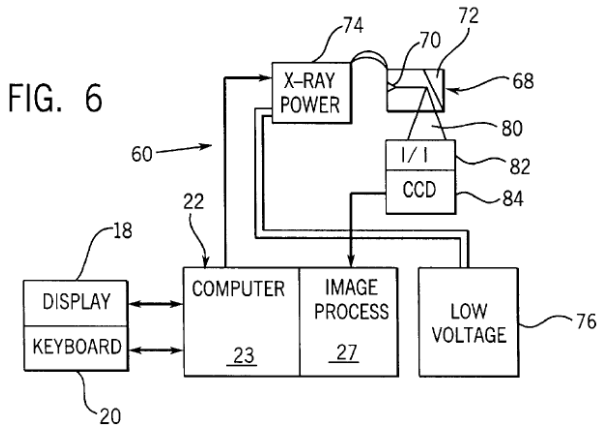

Mazess 445 at Fig. 6, 6:38–47 (discussing operation of equipment shown in Figure 6).

CONTAINS HIGHLY CONFIDENTIAL INFORMATION

294. Mazess 445 also discloses another embodiment wherein the X-ray Equipment includes an x-ray source 322 and the detector as image intensifier 320:

> The mobile fluoroscopy machine 310 includes a mobile car 312 supporting a computer 314 and monitor and keyboard 317 for receiving and processing digital x-ray image data. The cart 312 supports on one side an articulating arm assembly 316 terminating in a rotatable C-arm 318. The C-arm supports, at the ends of the C, an image intensifier 320 and an x-ray source 322 opposed along an axis 324 so that the x-ray source 322 projects a cone-beam of x-ray radiation toward the image intensifier 320 along axis 324.

Mazess 445 at 16:1–9.

295. Mazess 445 further specifies that an independent detector array 360 could be substituted for the image intensifier if the fluoroscopy equipment does not permit digital imaging or the necessary dual energy control required for densitometry. Mazess 445 at 17:13–59.

b) Intraoral Source

296. Claim 3 of the ’262 patent requires an intraoral source. Mazess 445 does not disclose the use of an intraoral source but such sources were known in the prior art. For example, Franke 537 discusses such prior art intraoral sources. Franke 537 at 1:16–21.

c) Single Axis Rotation

297. Mazess 445, either alone or in combination with other prior art discussed below, discloses that the x-ray source, for example, the x-ray tube, travels along a

CONTAINS HIGHLY CONFIDENTIAL INFORMATION

single axis and simultaneously rotates around the single axis—specifically, the x-ray tube is held by a C-arm and rotates in a vertical plane. Mazess 445 at Fig. 1, 2:11–16.

298. Other prior art further specifies that the x-ray source travels along a single axis and simultaneously rotates around the single axis. *See, e.g.*, Guenther 884 at Abstract, Fig. 1, 4:53–64. One of ordinary skill in the art would be motivated to modify Mazess 445 with such prior art because all such references utilize similar X-ray Equipment for the purpose of patient diagnostic imaging.

299. For example, Webber 686 discloses the Single Axis requirement. Figures 4 and 5 of Webber 686 disclose that the x-ray source, for example, x-ray source 32, travels along a single axis and simultaneously rotates around the single axis. Webber 686 further specifies that the "radiographic source and radiographic detectors are rotated about a vertical axis." Webber 686 at Abstract. Webber 686 also notes that it was known to "synchronously rotat[e] the fan-shaped beams, and the corresponding detectors, about an axis orthogonal to the plane of the teeth." Webber 686 at 4:40–45; *see also* Webber 686 at 5:6–10, 6:45–50, 7:12–19, 7:63–66. The CT scanners in Cann 1980 and Cann 1987 also rotate about a single axis.

300. As another example, Lemchen 739 discloses a scanning gantry whereby the x-ray source and x-ray detector are rotated around the patient's structure being imaged. Lemchen 739 at Figs. 1, 2, 7, 4:14–17, 5:49–52.

CONTAINS HIGHLY CONFIDENTIAL INFORMATION

301. Bisek 162 similarly describes a gantry that rotates around a vertically oriented axis of rotation that holds the x-ray source. Bisek 162 at Fig. 1, 5:36–47, 5:49–52, 6:21–26, 6:35–39.

302. U.S. Patent No. 4,783,793 to Virta ("Virta 793," filed September 9, 1986 and issued November 8, 1988) is another example of a rotatable source around a single axis and discloses:

> Referring to FIGS. 1 and 2, in the frontal area of the dental arch comprising the space defined between X-ray a_0 and a_2 and designated sector c, a rotatable arm 11 which carries the X-ray tube 10 on one of its ends and the film cartridge 20 on the other one of its ends rotates in a horizontal plane around a vertical axis O_2.

Virta 793 at 4:41–51; *see also* Virta 793 at Fig. 1.

d) Restricted Beam Device

303. As further required by certain Asserted Claims, Mazess 445 also discloses the use of a Restricted Beam Device. For example, Mazess 445 discloses the use of x-ray source 322 that projects a cone beam of radiation, which is a Restricted Beam Device. Mazess 445 at 16:1–9. Mazess 445 also shows collimators that are used to restrict the x-ray beam. Mazess 445 Figures 1, 5 and 6, 4:43–53, 18:16. Mazess 445 also describes the use of an occluder to facilitate measurement of the intensity of scattered x-rays. Mazess 445 at 14:34–55. This occluder restricts the x-ray beam.

CONTAINS HIGHLY CONFIDENTIAL INFORMATION

e) Dual Energy

304. Mazess 445 discloses that the X-ray Equipment may comprise a dual energy level, restricted beam device. The Restricted Beam Device described above may be Dual Energy as explained in Mazess 445. Specifically, Mazess 445 describes switched x-ray source 322 that may be used in Dual Energy imaging. Mazess 445 at 1:59–2:3 (discussing the quantitative dual energy mode to obtain densitometric data), 14:13–24 (discussing use of dual energy techniques), 17:30–36 (specifying that x-ray source 322 could be used for dual energy imaging). Mazess 445 also describes an independent dual layer detector for dual energy imaging. Mazes 445 at 17:14–23.

f) Cone Configuration

305. Mazess 445 further discloses that the x-ray source may emit an x-ray beam comprising a Cone Configuration. Specifically, Mazess 445 discloses the use of x-ray source 322 that projects a cone beam of radiation, which is an x-ray beam in a Cone Configuration. Mazess 445 at 16:1–9.

g) Input Device

306. Mazess 445 discloses numerous examples of Input Devices that are connected to the microprocessor of the disclosed system. Specifically, Mazess 445 discloses that the following Input Devices are connected to the microprocessor of the Mazess 445 systems: a CCD camera, detector, image intensifier/video camera, fluoroscopy

CONTAINS HIGHLY CONFIDENTIAL INFORMATION

machine 310, or a keyboard. Mazess 445 at Abstract (discussing use of a detector or image intensifier as an input to the associated computer), Figs. 1–3, 6 (showing image intensifier and CCD camera as inputs to the image processing unit of the computer), 2:35–40 (discussing image intensifier/video camera as an input to the microprocessor), 4:22–42 (discussing keyboard 20 as an input to computer 22), 6:38–47 (discussing CCD camera as an input to the computer), 16:1–4 (discussing keyboard 317 as an input to computer 314), and 18:24–65 (discussing fluoroscopy machine 310 as an input to computer 314 which includes processor 380 and memory 382).

h) Dental Input Device

307. Mazess 445 discloses a dental or orthopedic input device including an energy source and an energy sensor; said source and said sensor being placed with at least a portion of the patient's dental or orthopedic structure therebetween. Specifically, Mazess 445 discloses a Dental Input Device (specifically the X-ray Equipment) that includes an energy source (e.g., the x-ray tube or x-ray source) and an energy sensor (e.g., CCD camera 84, image intensifier, or independent detector array 360) wherein the patient's orthopedic structure (e.g., a patient spine or limb) being imaged is placed between the source and sensor. Mazess 445 at Abstract (discussing generally using the x-ray tube and a detector), Fig. 1 (showing the use of x-ray tube 68 and CCD camera 84), Fig. 6 (showing the x-ray tube 68 and image intensifier 82/CCD

CONTAINS HIGHLY CONFIDENTIAL INFORMATION

camera 84 as inputs to the image processing unit of computer 22 which contains both microprocessor 23 and image processor 27), 1:28–39 (describing the orientation of the x-ray source and image detector in relation to the patient structure being imaged), 1:59–62 (specifying that the patient's forearm or foot (orthopedic structures) could be placed between the x-ray source and detector), 2:10–24 (describing Figures 1–3), 2:30–40 (describing Figures 5–6), 3:37–41 (describing Figure 25), 4:34–53 (describing Figure 2 including that x-ray tube 68 and image intensifier 82/CCD camera 84 are held by a C-arm), 6:19–60 (describing operation of the X-ray Equipment including reception by the image intensifier 82/CCD camera 84 of signals that are then provided as data to the computer), 16:1–9 (discussing positioning of image intensifier 320 and x-ray source 322), 17:13–67 (discussing substitution of an independent detector array 360 in lieu of image intensifier 320).

i) Positioning Motor

308. Mazess 445 in combination with other prior art discloses the use of a positioning motor connected to the microprocessor of the system that moves in response to signals or commands from the microprocessor. Although Mazess 445 does not explicitly refer to a positioning motor connected to the microprocessor by which the X-ray Equipment may be automatically rotated, as discussed above, the X-ray Equipment was capable of rotation and it would have been within one of skill in the art to add a motor to the system to automatically position such X-ray

CONTAINS HIGHLY CONFIDENTIAL INFORMATION

Equipment. Such a modification to the repositioning mechanism to include a positioning motor controlled by a microprocessor would be obvious and not yield any unexpected or unpredictable results.

309. Prior art exemplifies the state of knowledge of one of ordinary skill in the art, including that the use of positioning motors in similar x-ray imaging systems was routine in the art. For example, as discussed above, Webber 686 discloses use of a Positioning Motor (e.g., motor 45). Webber 686 at Figs. 5 & 7, 9:42–45, 10:10–17.

310. As another example discussed above, Guenther 884 discloses use of a Positioning Motor (e.g., motors 37–40 with drive 27 connected to control unit 35, which sends commands to control positioning). Guenther 884 at Figs. 5, 7, 4:7–20, 4:36–41, 4:48–5:10.

311. Virta 793 similarly discloses a Positioning Motor (e.g., rotary motion motor, film transport motor, primary blind motor, each of which is connected and responsive to commands from microprocessor 108). Virta 793 at Figs. 2–3, 2:18–21 (discussing the motor for the film cartridge), 2:38–49 (discussing both the film transport motor and rotary motion motor), 5:28–47 (discussing all three motors and their control), 5:59–64 (discussing control of motor 31),

312. Figure 3 illustrates the connections between the motors and microprocessor of Virta 793:

CONTAINS HIGHLY CONFIDENTIAL INFORMATION

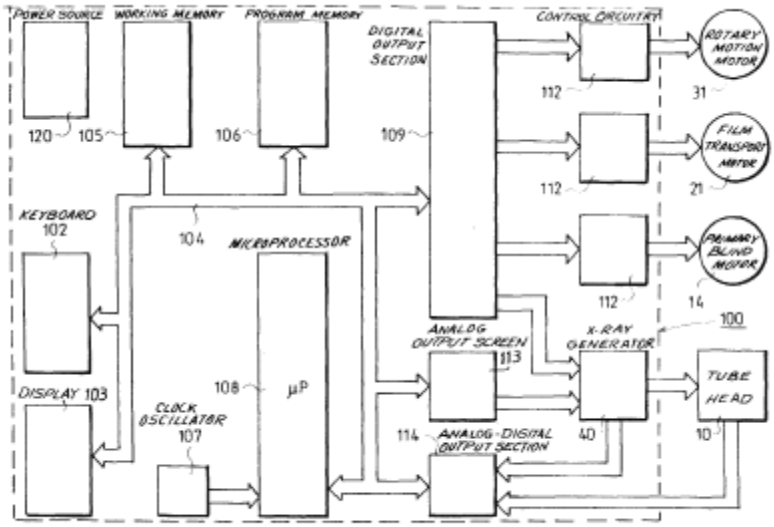

FIG. 3

313. Bisek 162 (described in greater detail below) also discloses Positioning Motors (e.g., stepper motors with stepper motor driving belts that are controlled by the microprocessor in the computer). Bisek 162 at 5:23–28, 5:44–48, 6:51–63 (specifying that the computer provides step commands to the motors associated with the various components to control their positioning). The CT scanners of Cann 1980 and Cann 1987 have single axis rotation.

j) Three Axes

314. Mazess 445 in combination with other prior art further discloses that the Positioning Motor(s) (described above) are adapted for positioning the X-ray Equipment (described above) with respect to three axes of movement as required by claim 2 of the ’301 patent. Mazess 445 discloses that the x-ray tube is held by a C-arm and rotates in a vertical plane. Mazess 445 at Fig. 1, 2:11–16. As shown in

CONTAINS HIGHLY CONFIDENTIAL INFORMATION

Figure 1, the Mazess 445 C-arm can swivel and be positioned in with respect to three axes of movement. It would have been a natural design choice to one of skill in the art to include motors with the Mazess 445 system to automate and control such positioning.

315. Further, other related prior art discloses Positioning Motors adapted for positioning the X-ray Equipment with respect to three axes of movement. For example, Webber 686 discloses Three Axes by disclosing positioning the X-ray Equipment in the horizontal plane and around a vertical axis, which therefore includes the x, y, and z directions. Webber 686 at Figs. 3–5, 11, 7:12–19, 8:33–41, 9:42–45.

316. Similarly, Guenther 884 discloses Three Axes. As described and shown above, the X-ray Equipment of Guenther 884 is adapted to be positioned in each of the x, y, and z directions through use of control unit 35, which drives the Positioning Motors. Guenther 884 at Figs. 1–4, 7, 4:54–64.

317. Bisek 162 also describes Three Axes and uses similar X-ray Equipment to that disclosed in Mazess 445. *See, e.g.*, Bisek 162 at Fig. 1, 5:23–28 (adjusting height), 5:36–47 (vertical axis of rotation), 5:49–52 (rotating the C-arm about an isocenter), 6:21–26 (angle of beam adjustable with translational movement of beam axis), 6:35–39 (rotate and move equipment along transverse axis), 6:51–63 (permitting any angle, adjusting height), 9:5–9 (discussing control of computer to components to

CONTAINS HIGHLY CONFIDENTIAL INFORMATION

control orientation of fan beams). The CT scanners of Cann 1980 and Cann 1987 have computer controlled motion in three axes.

k) Preprogrammed Scan Path

318. Mazess 445 in combination with the prior art discussed below also discloses that there is a Preprogrammed Scan Path programmed into the microprocessor as required by claim 6 of the ’301 patent. Mazess 445 describes that the computer 22 (including microprocessor 23) is used to control the x-ray power of the system in order to control the x-ray beam. Mazess 445 at Fig. 6, 2:35–40, 4:31–40, 6:29–32. As discussed above, it would have been a natural design choice to one of ordinary skill in the art to modify the Mazess 445 system to control the positioning of the X-ray Equipment. It similarly would have been natural to modify the Mazess 445 system beyond mere initial positioning to include a Preprogrammed Scan Path for the X-ray Equipment that is programmed into the microprocessor such as microprocessor 23.

319. Other prior art illustrates that the programming of a preprogrammed scan path for similar X-ray Equipment to that used in Mazess 445 into an associated microprocessor would have been within the skill set of one of ordinary skill and an obvious modification. For example, Webber 686 discloses a Preprogrammed Scan Path, specifically the horizontal rotation path 34 of the x-ray source and detector array around the vertical axis that is controlled by the described electronic controller.

CONTAINS HIGHLY CONFIDENTIAL INFORMATION

Webber 686 at Abstract, Figs. 3–4, 7, & 11, 7:63–66, 10:12–17. The CT scanners of Cann 1980 and Cann 1987 also have Preprogrammed Scan Paths.

320. As another example, Guenther 884 discloses a Preprogrammed Scan Path, specifically, the preprogrammed control of the rotation X-ray Equipment by commands sent to the four adjustment motors. Guenther 884 at 4:48–64.

321. Brummer 302 similarly describes programming a new scan path—new scan geometry that is parsed by a processor and stored in software—and sending commands using that geometry to control a new scan using the imaging device. Brummer 302 at Abstract, Figs. 2–4, 3:65–4:4 (discussing the scan geometry module), 8:35–44 (new scan geometry stored in software and used to drive imaging device), 12:34–51, 13:1–6, 16:8–19, claims 8–9, 14, 18.

322. Bisek 162 also discloses a Preprogrammed Scan Path. *See* Bisek 162 at Fig. 1, 6:48–63, 7:10–15 (discussing a second scan path), 9:5–9. Bisek 162 specifies that the computer may control the motion of the C-arm 40, slider 36, pallet 34, and table 12 "to permit the densitometer 10 to scan images not simply along the anterior/posterior and lateral directions, but at any angle of the C-arm 40." Bisek 162 at 6:48–55.

323. Virta 793 also discloses a Preprogrammed Scan Path, specifically the path of the X-ray Equipment around the patient's head including the speed of rotation, which is controlled by control system 100. Virta 793 at Figs. 2–3, 3:17–33, 3:43–

CONTAINS HIGHLY CONFIDENTIAL INFORMATION

47 (discussing preprogramming the control system means to only image a small area), claims 1, 10, 12–14.

l) Convertor

324. Mazess 445 further discloses a Convertor, for example, a CCD camera or the image intensifier/video camera, that is connected to the microprocessor and detector array and converts a signal from the detector array. As shown above, Figure 6 depicts the image intensifier and CCD camera that is connected to the special image microprocessor 27 of computer 22. *See also* Mazess 445 at 1:59–2:3, 2:35–40 (describing receipt of data from the image intensifier/ video camera by the microprocessor for image processing). Mazess 445 specifically discloses receipt of the analog signal from the x-ray beam by the image intensifier 82 and recorded by the CCD camera, which converts the signal into digital radiation values and provides them to the computer. Mazess 445 at 6:38–67; *see also* Mazess 445 at 18:24–40, 18:47–65 (discussing a similar embodiment using an independent detector array).

325. Mazess 445 also discloses that the Convertor could be an analog-to-digital convertor as further required by claim 3 of the ’301 patent. Specifically, Mazess 445 discloses that the CCD camera provides digital radiation values to the computer 22 inversely proportional to the x-ray absorption of the images object. *See, e.g.*, Mazess 445 at 6:38–67. That is a Convertor that takes the analog x-ray signal

CONTAINS HIGHLY CONFIDENTIAL INFORMATION

received and transmitted through the image intensifier and converts it into digital signals that can be processed by the computer.

m) Conversion Means

326. Mazess 445 as disclosed above discloses a Convertor, which is sufficient to also disclose the conversion means requirements of claim 1 of the ’301 patent. Mazess 445 further discloses the use of a Merger Device as discussed below, which is connected to an analog-to-digital convertor and the microprocessor and thus sufficient to meet the requirements of claim 4 of the ’301 patent.

n) Merger Device

327. Mazess 445 discloses a Merger Device as required by claim 4 of the ’301 patent, specifically, Mazess 445 discloses the CCD camera and image processor 27 connected to the analog-to-digital convertor. *See* Mazess 445 at Figs. 6, 32. As described in Mazess 445, additional functionality within the CCD camera merges data from a variety of points and provides that data to the processor in the computer. Mazess 445 at 6:38–67. There is therefore a Merger Device in the Convertor disclosed in Mazess 445.

328. Mazess 445 also discloses that the adapted fluoroscopy machine can be operated in a quantitative dual energy mode to obtain densitometric data. Mazess 445 at 1:59–2:3. Figure 32 shows a flow chart of how the software executed by the processing computer works including the merger at step 390. Mazess 445 at Fig.

CONTAINS HIGHLY CONFIDENTIAL INFORMATION

32, 3:65–67, 18:24–40; *see also* Fig. 9 (embodiment that merges current pixels with average by weights). Step 390 and later processing steps are described in Mazess 445 as follows with the data from high energy and low energy absorption merged in later steps within the image processor:

> At succeeding process block 390, data is collected for three distinct images 384 with: 1) no x-ray exposure, 2) high energy x-ray exposure, and 3) low energy x-ray exposure. Each of the exposures is preserved as a separate image file in the memory of the computer 314. The first exposure is used for correction routines to be described; the latter two exposures are used to deduce bone density according to methods well known in the art in which variations in high energy and low energy absorption are used to deduce the Compton scattering and atomic number of the material lying between the x-ray source 322 and the image intensifier 320. As is understood in the art, these two measurements allow the amount of bone as opposed to soft tissue located in that image region to be accurately measured. The data is acquired directly from the independent detector array 360 or in the event that stimulable plates are used, a reader may be attached to the computer 314 so as to acquire the necessary pixel data of an image 384. In the same way a conventional photographic film/filter plate arrangement may be used.

Mazess 445 at 18:47–65.

o) Controller

329. Mazess 445 also discloses a Controller, specifically, computer 314 or computer 22 or associated processing computer, each which includes a microprocessor (e.g., general microprocessor-type processor 23 or specialize image processor 27 or processor 380) and a memory device (e.g., memory 382) connected to the microprocessor. Mazess 445 at Figs. 1–3, 6, 1:62–2:3, 4:28–37, 7:16–27,

CONTAINS HIGHLY CONFIDENTIAL INFORMATION

18:24–32 (noting that "computer 314 includes a processor 380 and memory 382"), 20:46–63.

330. The Controller disclosed further includes means for storing and/or is adapted for storing Tomographic Models as required by claim 1 of the '301 patent and the independent claims of the '374 patent. Specifically, Mazess 445 describes storing images based on densitometric data—in other words processed images derived from bone mineral density values including of teeth. Mazess 445 at Fig. 6, 1:62–2:3, 18:24–32 (storing in memory 382), 20:46–43. Mazess 445 does not require the use of fiducial markers. Mazess 445 does not describe tomographic imaging. However other prior art illustrates that tomographic imaging with similar X-ray Equipment to that used in Mazess 445 would have been within the skill set of one of ordinary skill and an obvious modification. For example, Webber 686 discloses tomographic imaging, as described above.

p) Computer

331. As discussed above, Mazess 445 discloses that the Controller could be a Computer which includes a digital memory storing patient densitometry information, specifically, Mazess 445 discloses computer 314, computer 22, and associated processing computer. Figs. 1–3, 6, 4:28–37, 7:16–27, 18:24–32, 20:46–63. Mazess 445 further discloses that the Computer includes inputs, specifically a CCD camera, detector, image intensifier/video camera, fluoroscopy machine 310,

CONTAINS HIGHLY CONFIDENTIAL INFORMATION

and/or keyboard 20, and output, specifically the images as displayed on the video monitor, monitor, or display 18, as required by claim element 1(b) of the ’262 patent. Figs. 1–3, 6, 4:28–37, 7:16–27, 18:24–32, 20:46–63.

q) Imaging Software

332. Mazess 445 discloses imaging software, including for example, processing program 386, associated with the Computer as required by claim element 1(h) of the ’262 patent. Mazess 445 at Abstract (referring to software loaded onto the equipment to provide “correction of the images for the quantitative accuracy needed for bone densitometry”), Fig. 6 (showing the image processor 27 inside computer 22), Fig. 9 (flow chart of image processing), Fig. 32 (a “flow chart of software executed by a processing computer associated with the x-ray detector for providing quantitative densiometric data”), 1:62–66 (“Special software is loaded to the computer . . .”), 2:35–40 (describing Fig. 6), 3:65–67 (describing Fig. 32), 7:16–19 (describing Fig. 9), 8:20–29 (describing certain image processing), 14:11–15:61 (describing image processing), 18:24–40 (describing the processing program 386 on computer 314), 18:41–20:63 (describing image processing in program 386).

r) Output Device

333. Mazess 445 discloses an Output Device, specifically, video monitor/display 18 or the monitor or display of the computer. That Output Device is connected to the microprocessor and the computer output (the processed images). *See, e.g.*,

CONTAINS HIGHLY CONFIDENTIAL INFORMATION

Mazess 445 at Figs. 1–3, 20 (flow chart of steps performed by the computer to display image), 25, 1:36–43 (identifying the video monitor), 4:22–34 (video monitor 18 attached to computer 22), 16:1–4 (monitor), 20:46–63 (describing imaging processing and stating the resulting images may be displayed by computer 314). The Output Device disclosed is further adapted for receiving a Tomographic Model from the microprocessor. Specifically, Mazess 445 discloses processing images using bone density information and displaying those images. *See, e.g.*, Mazess 445 at 20:46–63.

334. As further required by claim 1 of the ’262 patent, the Output Device disclosed in Mazess 445, alone or in combination with other prior art, communicates densitometry model comparison information. *See, e.g.*, Mazess 445 at 20:46–63 (measurements of bone density). Mazess 445 specifically discloses:

> Referring now to FIG. 9, as data arrives at the computer 22, the computer 22 executes a stored program to compare current pixels of the image 86’ to the last pixels obtained from image 86 as indicated by the process block 94. This comparison is on a pixel by pixel basis with only corresponding pixels in the image 86 and 86’ compared. The difference between the values of the pixels 88, reflecting a difference in the amount of x-ray flux received at the CCD camera 84, is mapped to a weight between zero and one, with greater difference between pixels 88 in these two images corresponding to larger values of this weight w. This mapping to the weighting is shown at process block 96.

Mazess 445 at 7:16–27.

CONTAINS HIGHLY CONFIDENTIAL INFORMATION

s) Display

335. Mazess 445 further discloses the use of a Display as part of the Output Device. Specifically, video monitor/display 18 or the monitor or display of the computer is a Display that is part of the Output Device described above. That Display displays information pertaining to the densitometry model. Mazess 445 teaches that bone density information is used to process or create the images, which are then displayed by the computer. Mazess 445 at 20:46–63.

t) Color Monitor

336. As discussed above, Mazess 445 describes a video monitor on which images are processed and displayed to show bone mineral density values, including using image recognition type techniques and other techniques such as texture analysis. It was known in the art that these techniques included color-coding and the images of Mazess 445 contain Densitometry information, which could be color-coded. Mazess 445 at Figs. 1–3, 20, 25; 1:36–43; 4:22–34; 16:1–4; 20:46–63.

337. While there is no explicit disclosure of the ability of such monitors to receive output color-coded to represent densitometry, the state of the art of monitors at the time included the ability to display color images. Mazess 445 describes creating images using quantitatively calculated bone density information. It would have been a natural design choice for one of skill in the art to color-code such densitometry and to display such images on a Color Monitor.

CONTAINS HIGHLY CONFIDENTIAL INFORMATION

338. Moreover, it was known in the art that images/models could be color-coded. For example, the Planmeca DIMAXIS 1998 discusses pseudo-coloring of images. DIMAXIS 1998 at 18, 51.

339. It further would have been obvious to combine Mazess 445 disclosures with other references disclosing similar imaging systems and/or use displays to show images that were color-coded to represent Densitometry and thus meet the Color Monitor requirement.

340. As an example, the article Muller 1996 discusses using Gouraud shading to create a realistic representation of the bone being imaged. Gouraud shading was known in the art as a method to simulate the differing effects of light and color across the surface of an object. Muller 1996 at 1746; Fig. 1. Muller 1996 used three-dimensional peripheral quantitative computed tomography (3D-pQCT) and an analysis of bone density to create the images shown and described. Muller 1996 at Abstract.

341. In addition, Lemchen 739 describes a prior art combined CSPECT display terminal 26 that displays a color-shaded image of combined CT and Single Photon Emission Computed Tomographic ("SPECT") data that may be printed to a color laser printer 28. Lemchen 739 at 2:19–26. The invention described in Lemchen 739 builds on this prior art and incorporates color-coding of images (including those generated from an x-ray exposure and detection system, three dimensional contours

CONTAINS HIGHLY CONFIDENTIAL INFORMATION

scanning system, and a surface image scanning system and composite images from all of the systems) and display on monitor 16. Lemchen 739 at 4:43–52; 6:28–32, 6:58–7:4, 7:13–24, 8:28–34, 8:62–9:9. Lemchen therefore discloses a Color Monitor.

342. Brummer 302 describes 3-D visualization techniques to take 2-D images from object scans and create 3D images while retaining the "color-coded intensity values." Brummer 302 at 3:30–35, 3:39–42. Brummer 302 describes an image display which could either be a CRT or a liquid crystal display (LCD) screen and notes that a "sophisticated implementation may modulate the color of each point in the objects visualized." Brummer 302 at 8:28–34, 11:6–11, 15:5–17. Although Brummer 302 preferentially discusses applying such 3D visualization techniques to 2D MRI images, Brummer 302 also mentions x-ray computed tomography from which the Brummer 302 techniques could be similarly applied. Brummer 302 at 2:38–44.

u) Color Printer

343. Mazess 445, either alone or in combination with other prior art discloses a Color Printer—one adapted to print images color-coded to correspond to the Densitometry of the Tomographic Models. Mazess contemplates using compact digital printers for producing images. Mazess 445 at 1:45–51. Such printers were known to have the ability to print in color at the time of the claimed priority date.

CONTAINS HIGHLY CONFIDENTIAL INFORMATION

344. As described above, the disclosures of Mazess 445 could be combined with other prior art to arrive at images color-coded to correspond to the Densitometry of the Tomographic Models. It would have been a further natural modification to specifically add a Color Printer to the system.

345. Likewise, as discussed above, Lemchen 739 acknowledges that a color laser printer could be used to print color-coded images. Lemchen 739 at 2:19–26.

346. The Planmeca DIMAXIS Imaging Software User's Manual also contemplated printing pseudo-colored images using a printer. DIMAXIS 1998 at 4, 18, 51.

v) Densitometry

347. The Court construed "densitometry" to mean "quantitatively calculated bone density." Mazess 445 discloses quantitatively calculating bone density including through the use of dual energy techniques and using such density to create images (e.g., processed images of teeth derived from bone mineral density values). Mazess 445 at 18:24–32, 20:46–63.

w) Tomographic Models

348. As discussed above, the Court construed Tomographic Models to require "merging information from multiple tomographic scans of an object to produce a representation of the subject/ said representation depicting quantitative density differences of the object scanned, which is created by the microprocessor in the controller using densitometry from at least one focal plane."

CONTAINS HIGHLY CONFIDENTIAL INFORMATION

349. Mazess 445 teaches merging information from multiple images of an object—for example, merging images acquired at different energies, comparing pixels in a current image to pixels in a prior image, assigning weights by amount of change, and merging current pixels with the average by weights in order to produce and display the images. Mazess 445 at Fig. 9, 7:16–27. Mazess 445 further discloses that the ultimate images produced may be based on the processing of Densitometry data. Mazess 445 at 18:24–32, 20:46–63. These disclosures in Mazess 445 teach the merging of information, including Densitometry data, and one of skill in the art could additionally apply such teachings to decide to merge information from multiple tomographic scans and store the resulting models.

350. In addition, it would have been obvious to one of ordinary skill in the art that the adaptor for bone density measurements disclosed in Mazess 445 could have been modified to merge information from multiple tomographic scans and store the resulting Tomographic Models in light of other prior art that similarly teach imaging of bone and dental structures using similar X-ray Equipment.

351. For example, Webber 686 discloses merging information from multiple tomographic scans, specifically, merging signals received from different angles through the object in different focal planes ("simultaneous acquisition of multiple panoramic projections, each produced at a different angle"). Webber 686 at 1:64–67, 2:14–18, 5:52–59, 7:49–8:14. After the tomosynthetic process described in

CONTAINS HIGHLY CONFIDENTIAL INFORMATION

Webber 686, the resulting three-dimensional image is a representation of the amount of radiation attenuated by the object. Webber 686 at 5:52–59. That three-dimensional image is created by the microprocessor in the Controller. Webber 686 at Figs. 7–8, 10:10–23. Thus, one of ordinary skill in the art could have modified the system of Mazess 445, which creates images based on Densitometry data to additionally merge information from multiple tomographic scans as described in Webber 686.

352. As another example, the Densitometry teachings of Mazess 445 could be combined with the teachings of Guenther 884, which discusses merging information to create a panoramic tomogram of the patient's dental structure from multiple focal planes, including through digital image processing. Guenther 884 at 2:46–61 (turning the x-ray source and x-ray detector so that it orbits the patient's head), 5:15–21, claims 1, 13–14. Particularly, in combination with the Mazess 445 disclosures disclosing Dual Energy Densitometry methods as described above, it would have been obvious to one of skill in the art to modify these methods to include merging information from multiple tomographic scans (e.g., at different energy levels) in order to produce a Tomographic Model that uses Densitometry information to construct the model.

353. As another example, the Densitometry methods disclosed in Mazess 445 could be combined by one of ordinary skill in the art with the disclosures of

CONTAINS HIGHLY CONFIDENTIAL INFORMATION

Brummer 302 to generate the claimed Tomographic Models. Brummer 302 discloses that the microprocessor in the Controller merges information from multiple focal planes to depict a representation of the subject or object scanned. Specifically, Brummer 302 contemplates using image data from multiple tomographic planes to generate the 3-D model. Brummer 302 at Abstract (using "tomographic data acquisition"), Figs. 2–4 (showing processing), 1:18–19 ("The present invention generally relates to 3-dimensional tomographic imaging . . ."), 4:25–38 (discussing storing image planes as image data used to construct the 3-D model), 4:54–5:3 (". . . there is disclosed a computer program product for use with a data processing system for facilitating the display and visually driven definition of tomographic image planes in three-dimensional (3-D) space. . ."), 9:20–41 (describing 3-D model generation), claims 1, 8, 18 (each discussing generating the 3-D model with one or more plane images).

x) 3D

354. Certain claims require that the claimed models be three-dimensional. Mazess 445 teaches digital image processing but does not explicitly address three-dimensional models. It would have been obvious for one of skill in the art to combine the method disclosed in Mazess 445 with additional processes disclosed in the art to generate a three-dimensional model because it was known that three-dimensional models of patient's structures provided additional helpful diagnostic

CONTAINS HIGHLY CONFIDENTIAL INFORMATION

detail. Other than additional software required to perform the additional computer processing to take two-dimensional data and combine to create a three-dimensional representation, no change to the equipment of Mazess 445 would have been required.

355. Webber 686 is an example of such prior art that discloses the 3D requirement of the Asserted Claims. Webber 686 teaches three-dimensional models (i.e., the three-dimensional image generated by the disclosed tomosynthetic process). Specifically, Webber 686 teaches:

> The resulting multiple projections can be tomosynthetically processed to produce a three-dimensional image of tissues of diagnostic interest, free of image artifacts produced by irradiation of the spine.

Webber 686 at Abstract; *see also* Webber 686 at 5:58–59, 8:9–14.

356. As another example, Brummer 302 uses 3D computer graphics techniques to represent computed tomography information in three dimensions:

> Apparatuses, methods and computer program products for scan plane geometry definition in tomographic data acquisition via an interactive three-dimensional (3-D) graphical operator interface. The apparatuses, methods and computer program products are initially proposed for use in cardiac MRI, but have a much broader area of application. The apparatuses and methods utilize 3-D computer graphics aspect views of slice planes to show a new scan, represented as semi-transparent uniformly-colored planes. Intersections of these planes with opaque texture-mapped gray-level views of previously acquired images enable the orientation of a new scan to be viewed in a much more intuitive fashion. Advantageously, the apparatuses and methods of the present invention provide for more efficient elimination of positional ambiguity that is often associated with conventional 2-D intersection line views. In addition, any misregistration between localizer scans can be detected

CONTAINS HIGHLY CONFIDENTIAL INFORMATION

> immediately in the integrated 3-D display by misalignment of anatomy in the previously acquires image planes.

Brummer 302 at Abstract; *see also* Brummer 302 at Figs. 2–4, 1:18–22, 3:30–64, 4:5–13. Although Brummer 302 focuses on use of such techniques with information derived from MRIs to generate 3D models, it acknowledges that the same techniques could be used with other imaging systems. Brummer 302 at 1:43–48. It would have been natural for one of skill in the art to take the two-dimensional digital image processing of Mazess 445 and augment to generate three-dimensional models as a way to represent more information to the user.

357. Brummer 302 is further discussed in greater detail below in Section VIII.D.

358. Muller 1996 also discloses the 3D requirement, specifically, use of 3D-pQCT to generate models of bone structure. Muller 1996 at Abstract, Fig. 1, 1746.

y) Controller Storing Preexisting/Current Models

359. As discussed above, Mazess 445 describes comparing one image to another image, including a prior image to a current image thus requiring the Controller to store preexisting and current images. Mazess 445 at 7:16–27, 8:20–29, 18:24–33. Mazess 445, either alone or in combination with other prior art discussed above, also discloses storing and generating multiple Tomographic Models. Mazess 445 at 18:24–33, 20:46–63. Further, as discussed above, Mazess 445 discloses a Controller adapted for storing multiple Tomographic Models. The combination of these

CONTAINS HIGHLY CONFIDENTIAL INFORMATION

disclosures would lead one of ordinary skill in the art to understand that the Controller could be adapted for storing preexisting and current Tomographic Models that can be compared with the Controller.

360. In addition, one of ordinary skill would combine the Mazess 445 disclosures with those of other prior art as discussed below that utilize similar X-ray Equipment for diagnostic imaging. For example, Brummer 302 discusses the ability to compare an image produced from a prior scan to a new scan, thus requiring storage of both pre-existing and current Tomographic Models. Brummer 302 at Abstract, Figs, 2–4 (indicating storage of images and image models), 4:25–38, 4:54–5:3, 11:49–65, claims 8, 14.

z) Comparing Models

361. As discussed above, the Controller disclosed in Mazess 445 (or as modified by the prior art) is adapted to compare a preexisting Tomographic Model and a current Tomographic Model.

3. Summary Regarding Mazess 445

362. Below I summarize my opinions with respect to Mazess 445.

363. With respect to the ’301 patent:

- Mazess 445 renders obvious Asserted Claims 1–8 of the ’301 patent in view of Webber 686, Brummer 302, and/or Guenther 884 with respect to Tomographic Modeling;

CONTAINS HIGHLY CONFIDENTIAL INFORMATION

- Mazess 445 renders obvious Asserted Claims 1–8 of the ’301 patent in view of Webber 686, Virta 793, and/or Bisek 162 with respect to Positioning Motor;
- Mazess 445 renders obvious Asserted Claims 1–8 of the ’301 patent in view of Brummer 302 with respect to Storing Models;
- Mazess 445 renders obvious Asserted Claims 1–8 of the ’301 patent in view of Webber 686 with respect to Tomographic Models;
- Mazess 445 renders obvious Asserted Claim 2 of the ’301 patent in view of Webber 686, Guenther 884, Bisek 162, Cann 1980, and/or Cann 1987 with respect to Three Axes of movement;
- Mazess 445 renders obvious asserted claim 3 of the ’301 patent in view of Webber 686, Guenther 884, Bisek 162, Brummer 302, Virta 793 Cann 1980, and/or Cann 1987 with respect to a Preprogrammed Scan Path;
- Mazess 445 also renders obvious asserted claim 7 of the ’301 patent in view of DIMAXIS 1998, Muller 1996, Lemchen 739, and/or Brummer 302 with respect to the Color Monitor; and
- Mazess 445 also renders obvious asserted claim 8 of the ’301 patent in view of DIMAXIS 1998 and/or Lemchen 739 with respect to the Color Printer.

364. With respect to the ’262 patent:

- Mazess 445 renders obvious Asserted Claims 1, 2, 4 and 6 of the ’262 patent in view of Webber 686, Brummer 302, and/or Muller 1996 with respect to 3D Models;
- Mazess 445 renders obvious Asserted Claims 1, 2, 4 and 6 of the ’262 patent in view Brummer 302 with respect to Storing Models; and
- Mazess 445 also renders obvious Asserted Claim 3 of the ’262 patent (not charted by Osseo) in view of Franke 537 with respect to Intraoral Source.

CONTAINS HIGHLY CONFIDENTIAL INFORMATION

365. With respect to the ’374 patent:

- Mazess renders obvious Asserted Claims 1,2, 4, 6–8, 10 and 12 of the ’374 patent in view of Webber 686, Brummer 302, and/or Guenther 884 with respect to Tomographic Modeling;
- Mazess 445 renders obvious Asserted Claims 3, 9, and 13–24 of the ’374 patent in view of Webber 686, Brummer 302, and/or Muller 1996 with respect to 3D Models;
- Mazess 445 renders obvious Asserted Claims 1–4, 6–10 and 12–24 of the ’374 patent in view of Webber 686, Virta 793, and/or Bisek 162 with respect to Positioning Motor;
- Mazess 445 renders obvious Asserted Claims 1–4, 6–10 and 12–24 of the ’374 patent in view of Webber 686 with respect to Tomographic Models;
- Mazess 445 renders obvious Asserted Claims 4, 10, 16 and 20 of the ’374 patent in view of Guenther 884, Webber 686, Lemchen 739, Bisek 162, and/or Virta 793 with respect to a Single Axis; and
- Mazess 445 renders obvious Asserted Claims 6 and 12 of the ’374 patent in view of Brummer 302 with respect to Storing Models.

D. Brummer 302 in Combination with Other Prior Art

1. Brummer 302

366. U.S. Patent No. 6,898,302 (PlanmecaPA000294–311) was filed May 22, 2000 by Marijn E. Brummer claiming priority to a provisional application filed May 21, 1999 and thus is prior art to the Patents-in-Suit, which claim priority to a December 1, 1999 application. Brummer 302 issued May 24, 2005 and is titled “Systems, Methods and Computer Program Products for the Display and Visually Driven Definition of Tomographic Image Planes in Three-Dimensional Space.”

CONTAINS HIGHLY CONFIDENTIAL INFORMATION

2. Brummer 302 and Other Prior Art Applied to the Asserted Claims of the Patents-in-Suit

367. Below I describe in summary how Brummer 302 anticipates and/or in combination with other specified prior art renders obvious the limitations of each asserted claim. I have reviewed the invalidity contentions served by Planmeca, including the chart identifying disclosures of Brummer 302 and, as necessary, other prior art against the claim limitations. I agree with that chart and attach it as **Exhibit 8** as further evidence in support of my opinion that Brummer 302 either alone, or in combination with the other identified references, anticipates or renders obvious each asserted claim. I reserve the right to rely on disclosures identified in **Exhibit 8** in addition to those listed below.

a) X-ray Equipment

368. Brummer 302 discloses the use of X-ray Equipment. Brummer 302 contemplates use of the methods disclosed with conventional imaging equipment modified with additional computer processing. One example of such conventional imaging equipment is that used with X-ray Computed Tomography. Brummer 302 at 1:18–22, 1:25–31, 2:38–41, 3:51–59, 7:60–67. At the time of the claimed priority date, conventional X-ray Computed Tomography equipment as would be used in the referenced imaging device of Brummer 302 would have included an x-ray source and a detector array.

CONTAINS HIGHLY CONFIDENTIAL INFORMATION

369. The Patents-in-Suit readily admit that the claimed X-ray Equipment was conventional. ’301 patent at 1:21–24, 4:20–23 (including incorporation by reference of the x-ray equipment disclosed in my ’080 patent). I agree that a person of ordinary skill in the art at the time of the priority date of the Patents in Suit would know about the components of a CT scanner. Thus, it would have been within the skill of one in the art to incorporate such X-ray Equipment into an imaging device.

370. Further, to the extent that Brummer 302 does not explicitly disclose an x-ray source and detector array, other prior art similarly discussing diagnostic imaging devices, including prior art discussing the referenced X-ray Computed Tomography and multiple references cited in Brummer 302, disclose the use of an x-ray source and detector array. For example, Webber 686 discloses the use of X-ray Equipment, including both an external x-ray source, for example, x-ray source 32, and an external detector array/sensor, for example, detector array 33. *See, e.g.*, Webber 686 at Figs. 3, 5, and 11 (depicting the positioning of the x-ray source and the detector array), 5:24–30 (discussing x-ray source and linear radiation detectors such as a vertical, linear CCD array); 6:42–48 (discussing x-ray source and linear detector array).

371. As another example, Guenther 884 discloses the use of X-ray Equipment, including both an external x-ray source, for example, x-ray source 5 and an external detector array/sensor, for example, pick up unit 6 (which could be a CCD line sensor

CONTAINS HIGHLY CONFIDENTIAL INFORMATION

or other x-ray sensitive digital sensor and is also referred to as a digital image pick-up). Guenther 884 at 2:50–55; *see also* Guenther 884 at Abstract, Figs. 1–4, & 7–8, 1:9–12, 1:15–20, 5:15–21, claims 1–3, 13–14.

372. Mazess 445 further explicitly discloses X-ray Equipment, including specifically both an x-ray source, for example, x-ray tube 68 or x-ray source 322, and a detector array, for example, the image intensifier coupled to the CCD camera 84 or independent detector array 360. *See* Mazess 445 at Fig. 6, 6:38–47 (discussing operation of equipment shown in Figure 6), 16:1–9, 17:13–59.

b) Intraoral Source

373. Claim 3 of the '262 patent requires an intraoral source. Brummer 302 does not disclose the use of an intraoral source but such sources were known in the prior art. For example, Franke 537 discusses such prior art intraoral sources. Franke 537 at 1:16–21.

c) Single Axis Rotation

374. Brummer 302 discloses that the imaging device could be X-ray Computed Tomography equipment. Brummer 302 at 1:31–48, 2:34–41. CT scanners inherently have an x-ray source that rotates about an axis. The x-ray source also travels along that axis with respect to the patient to control the slice position. Brummer 302 therefore inherently discloses the Single Axis Rotation requirement. In addition, such equipment as described above with respect to the other references

CONTAINS HIGHLY CONFIDENTIAL INFORMATION

discussed, could include an x-ray source that travels along a single axis and simultaneously rotates around the single axis.

375. In addition, a natural design choice to one of ordinary skill in the art for an imaging system to implement the teachings of Brummer 302 would have been to include teachings from other prior art that disclose the x-ray source travels along a single axis and simultaneously rotates around the single axis. Such prior art similarly discloses imaging systems used for diagnostic purposes.

376. For example, Webber 686 discloses that the x-ray source, for example, x-ray source 32, travels along a single axis and simultaneously rotates around the single axis. Webber 686 at Figs. 4–5. Webber 686 further specifies that the "radiographic source and radiographic detectors are rotated about a vertical axis." Webber 686 at Abstract. Webber 686 also notes that it was known to "synchronously rotat[e] the fan-shaped beams, and the corresponding detectors, about an axis orthogonal to the plane of the teeth." Webber 686 at 4:40–45; *see also* Webber 686 at 5:6–10, 6:45–50, 7:12–19, 7:63–66.

377. As another example, Guenther 884 discloses that the x-ray source, for example, x-ray source 5, travels along a single axis and simultaneously rotates around the single axis. Guenther 884 characterizes its system as follows:

> A dental x-ray diagnostics installation for producing panorama x-ray exposures of the skull of a patient has a rotary unit and a positioning unit mounted so as to be pivotable boom-like around a horizontal axle

CONTAINS HIGHLY CONFIDENTIAL INFORMATION

> shaft and are arranged so as to be fixable in individual swiveled positions. The individual swiveled positions thereby correspond to different physical sizes of a seated patient. For preparing an exposure, the positioning unit is first adjusted to the patient and the rotary unit is subsequently adjusted in a fixed allocation to the positioning unit.

Guenther 884 at Abstract, Fig. 1, 4:53–64. As described, the x-ray source travels along and can rotate around a single axis.

378. As another example, Lemchen 739 discloses a scanning gantry whereby the x-ray source and x-ray detector are rotated around the patient's structure being imaged. Lemchen 739 at Figs. 1, 2, 7, 4:14–17, 5:49–52.

379. Bisek 162 similarly describes a gantry that holds the x-ray source that rotates around an axis of rotation; the gantry also travels along that axis. Bisek 162 at Fig. 1, 5:30–36, 5:49–52, 6:21–26, 6:35–39.

380. Virta 793 is another example of a rotatable source around a single axis and discloses:

> Referring to FIGS. 1 and 2, in the frontal area of the dental arch comprising the space defined between X-ray a_0 and a_2 and designated sector c, a rotatable arm 11 which carries the X-ray tube 10 on one of its ends and the film cartridge 20 on the other one of its ends rotates in a horizontal plane around a vertical axis O_2.

Virta 793 at 4:41–51; *see also* Virta 793 at Fig. 1.

d) Restricted Beam Device

381. Brummer 302 discloses that the methods disclosed could be used with imaging devices including X-ray Computed Tomography equipment. Conventional

CONTAINS HIGHLY CONFIDENTIAL INFORMATION

X-ray Computed Tomography equipment at the time included dual energy level, restricted beam devices where quantitative computed tomography methods were being used to determine bone density.

382. To those of skill in the art, it would have been obvious to adapt the disclosures of Brummer 302 to further include a restricted beam device with the imaging device. A restricted beam device enables more targeted x-ray radiation consistent with principles of reducing patient exposure to radiation. Adding a restricted beam device would not yield any unexpected or unpredictable results.

383. As an example of the conventional nature of using restricted beam devices in imaging devices such as those that could be used with the methods of Brummer 302, and as discussed above, Webber 686 discloses the use of a Restricted Beam Device. *See* VIII.A.2.d).

384. As another example, Bisek 162 describes prior art restricted beam devices such as equipment that forms a narrowly collimated beam of radiation and/or fan beams. Bisek 162 at Fig. 1, 1:25–33, 5:59–65. Similarly, Muller 1996 describes a fan-beam collimation system, which is a Restricted Beam Device. Muller 1996 at Fig. 1, 1746.

385. Mazess 445 also discloses the use of a Restricted Beam Device. Mazess 445 at 16:1–9.

CONTAINS HIGHLY CONFIDENTIAL INFORMATION

e) Dual Energy

386. Brummer 302 discloses methods that can be used to modify conventional imaging devices, including those that perform X-ray Computed Tomography. It was well known at the time that X-ray Equipment for Computed Tomography could include a dual energy level, restricted beam device, particularly where Quantitative Computed Tomography ("QCT") was employed. Thus, it would have been obvious for one of skill in the art to use an imaging device as called for in Brummer 302 that also included a dual energy level, restricted beam device.

387. Prior art discloses such dual energy level, restricted beam devices. For example, Mazess 445 describes Dual Energy used for the purpose of measuring bone density. Mazess 445 at 1:59–2:3, 14:13–24; 17:30–36.

388. Similarly, one of ordinary skill in the art may have looked to Bisek 162 to add Dual Energy to the X-ray Computed Tomography equipment used in accordance with the disclosures in Brummer 302. Bisek 162 describes using a dual energy restricted beam device to measure bone mass. Bisek 162 at 1:48–51, 6:9–18, 10:55–62.

f) Cone Configuration

389. It would have been further obvious to include with the imaging device of Brummer 302 an x-ray source that emits an x-ray beam comprising a Cone Configuration. It would have been obvious to combine prior art disclosing such an

CONTAINS HIGHLY CONFIDENTIAL INFORMATION

x-ray source with the teachings of Brummer 302 because the references all teach imaging systems that utilize similar equipment.

390. For example, Bisek 162 recognizes that broad cone-shaped beams were known in the art. Bisek 162 at 1:25–28, 1:66–2:1. One of skill in the art would understand that conventional x-ray sources equipped to emit the beam in a Cone Configuration could be used in the imaging device of Brummer 302.

391. Similarly, Mazess 445 describes using equipment to emit an x-ray beam in a Cone Configuration. Mazess 445 at 15:64–16:9 (". . . the x-ray source 322 projects a cone-beam of x-ray radiation . . .").

392. Franke 537 also exemplifies the Cone Configuration used in prior art systems. The shape is typically created by passing the x-ray beam through an aperture as shown in Figure 1:

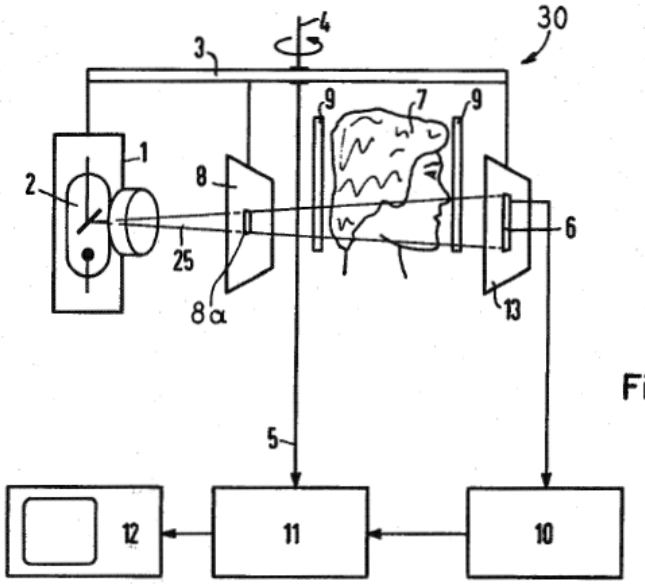

Fig. 1

CONTAINS HIGHLY CONFIDENTIAL INFORMATION

Franke 537 at Fig. 1; *see also* Franke 537 at Figs. 2–3, 3:61–64.

g) Input Device

393. Brummer 302 discloses input devices, for example, the imaging device or conventional input devices such as a mouse or keyboard, that are connected to the microprocessor of the disclosed system. Brummer 302 at Abstract (describing computer processing of tomographic data obtained from the imaging device), Fig. 2 (showing the imaging device as an input to the ISGD System 200), Fig. 3 (showing imaging data from the imaging device as an input to the 3D Model device), Fig. 4 (showing the imaging device and data originating therefrom as an input to the 3D graphics engine), 3:48–59 (discussing the imaging device as an input device to the 3D model device and an "input device for receiving operator input"), 8:35–46 (discussing operator-supplied inputs), 8:58–9:33 (explaining that a mouse or keyboard could be used or any other "conventional input device" to provide operator input), 9:57–63 (discussing a mouse as an input device), 11:49–65 (imaging device as an input to the 3D Model device, which further processes the image data), 12:5–37 (discussing operator inputs using input devices), 13:6–10 (discussing input devices such as a mouse or keyboard), 13:40–46 (discussing input devices such as "a keyboard, mouse pointer, trackball pointer, pen pointer device, keyboard, and the like"), 15:35–56 (discussing operator input device), claim 1. Each of these input

CONTAINS HIGHLY CONFIDENTIAL INFORMATION

devices is connected to a microprocessor as required for the further processing of image data discussed in Brummer 302.

h) Dental Input Device

394. Brummer 302, either alone or in combination with the prior art discussed above, discloses X-ray Equipment comprising an imaging device, which is an input to the computer for further processing to create 3D models. Specifically, as discussed above with respect to the X-ray Equipment, such includes an energy source (e.g., x-ray source) and an energy sensor (e.g., a detector array) wherein the patient's dental structure being imaged is placed between the source and sensor. Therefore, the imaging device of Brummer 302, including to the extent modified by prior art as discussed above, is a Dental Input Device.

i) Positioning Motor

395. Brummer 302 also inherently discloses the use of a Positioning Motor connected to the microprocessor of the system that moves in response to signals or commands from the microprocessor (e.g., commands regarding scan geometry) as part of the referenced imaging device. Brummer 302 at Abstract, Fig. 3 (showing scan geometry forwarded to the imaging device), Fig. 4 (same), 5:47–52 (discussing modifying plan orientation of a new scan), 12:14–40 (discussing sending the scan geometry parameters to the imaging device for a new scan), claim 1 (specifying the

CONTAINS HIGHLY CONFIDENTIAL INFORMATION

pre-acquisition scan model as an input to the imaging device that acquires the images).

396. Further, it would have been a natural design choice given the Brummer 302 disclosures noted above for one of skill in the art to employ a Positioning Motor to achieve the goal of the new scan using scan geometry defined at least in part based on operator input. One of skill in the art also could have looked to other prior art disclosing imaging devices appropriate for use with the Brummer 302 methods, many of which incorporate Positioning Motors to control scans using the X-ray Equipment.

397. For example, as discussed above, Webber 686 discloses use of a Positioning Motor (e.g., motor 45). Webber 686 at Figs. 5 & 7, 9:42–45, 10:10–17.

398. As another example discussed above, Guenther 884 discloses use of a Positioning Motor (e.g., motors 37–40 with drive 27 connected to control unit 35, which sends commands to control positioning). Guenther 884 at Figs. 5, 7, 4:7–20, 4:36–41, 4:48–5:10.

399. Virta 793 (PlanmecaPA000249–263) similarly discloses a Positioning Motor (e.g., rotary motion motor, film transport motor, primary blind motor, each of which is connected and responsive to commands from microprocessor 108). Virta 793 at Figs. 2–3, 2:18–21 (discussing the motor for the film cartridge), 2:38–49 (discussing

CONTAINS HIGHLY CONFIDENTIAL INFORMATION

both the film transport motor and rotary motion motor), 5:28–47 (discussing all three motors and their control), 5:59–64 (discussing control of motor 31).

400. Figure 3 illustrates the connections between the motors and microprocessor of Virta 793:

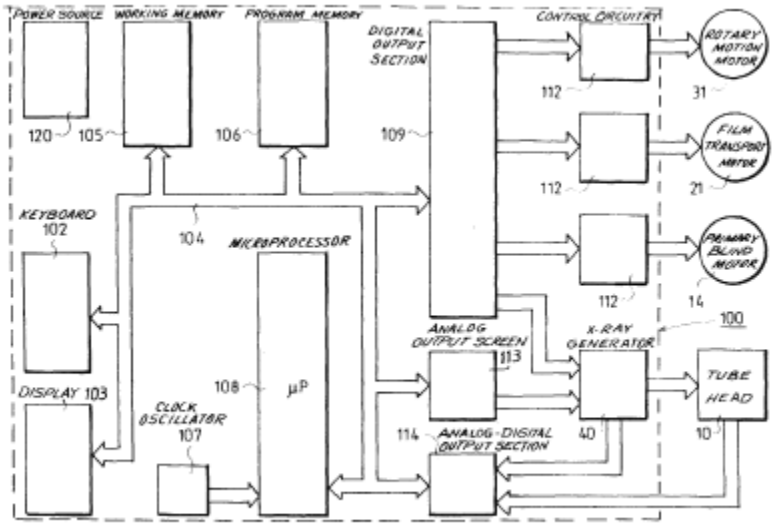

FIG. 3

401. Bisek 162 (described in greater detail below) also discloses Positioning Motors (e.g., stepper motors with stepper motor driving belts that are controlled by the microprocessor in the computer). Bisek 162 at 5:23–28, 5:44–48, 6:51–63 (specifying that the computer provides step commands to the motors associated with the various components to control their positioning).

j) Three Axes

402. Brummer 302 describes that the scan geometry parameters can ensure a scan in any plane:

CONTAINS HIGHLY CONFIDENTIAL INFORMATION

> The scan geometry parameters are received by the ISGD system 200 and forwarded to both the 3-D Model device (block 350) and imaging device (block 370) to identify the operator desired scan. The scan geometry parameters are transmitted to the scan model (block 350) located within the 3-D Model device to generate a 3-D model including both the image and scan objects produced by the 3-D graphics engine. The 3-D graphics engine represents the anatomy and scan geometry on a display (block 360) so that the operator can interactively modify the orientation of a desired scan geometry, which is typically a plane. Once this occurs, the operator is again queried to alter the scan geometry of the next scan (block 340). It should be appreciated that the imaging device simultaneously receives the scan geometry parameters when the parameters are transmitted to the scan model (block 370). The imaging device then utilizes these parameters to generate the operator-defined scan, and forwards the newly generated image data to the subject model of the 3-D Model device, thereby updating the 3-D model for display to the viewer (block 380). According to one aspect of the invention, the operator will be required to affirm that the scan geometry parameters are correct before the imaging device actually generates a desired scan. Additionally, there may be one or more delay devices located between the scan geometry, imaging device, and 3-D Model device, such that generation of the 3-D scan model and newly acquired image are synchronized.

Brummer 302 at 12:14–40; *see also* Brummer 302 at Abstract, 5:47–52, claims 1–2, 8, 14, 18. CT scanners inherently have motion in three axes.

403. The interaction between the imaging device and scan geometry inputs is shown in Figures 3 and 4:

CONTAINS HIGHLY CONFIDENTIAL INFORMATION

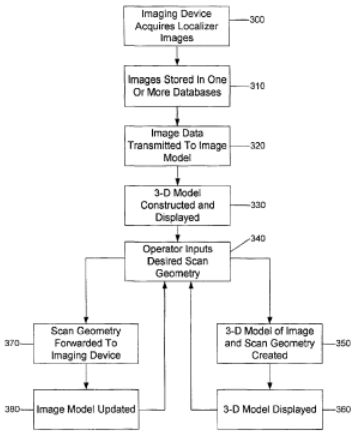

FIG. 3

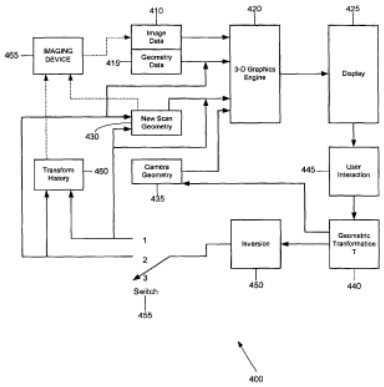

FIG. 4

Brummer 302 at Figs. 3–4. As can be seen from these disclosures, Brummer 302 contemplates scanning geometries at any angle and it would have made logical sense therefore for one of ordinary skill in the art to employ one or more Positioning Motors (as discussed above) in the Brummer 302 imaging device adapted to position the X-ray Equipment with respect to three axes of movement.

404. In addition, as noted above, other prior art discloses the Three Axes requirement. It would have been obvious to one of ordinary skill in the art to combine the disclosures of such prior art with those of Brummer 302 in order to accomplish the Brummer 302 goal of giving the operator the ability to define any scan geometry and take an image from any desired plane.

405. For example, Webber 686 discloses Three Axes by disclosing positioning the X-ray Equipment in the horizontal plane and around a vertical axis, which therefore

CONTAINS HIGHLY CONFIDENTIAL INFORMATION

includes the x, y, and z directions. Webber 686 at Figs. 3–5, 11, 7:12–19, 8:33–41, 9:42–45.

406. Similarly, Guenther 884 discloses Three Axes. As described and shown above, the X-ray Equipment of Guenther 884 is adapted to be positioned in each of the x, y, and z directions through use of control unit 35, which drives the Positioning Motors. Guenther 884 at Figs. 1–4, 7, 4:54–64.

407. Bisek 162 also describes the ability to position X-ray Equipment with respect to Three Axes. *See, e.g.*, Bisek 162 at Fig. 1, 5:23–28 (adjusting height), 5:36–47 (vertical axis of rotation), 5:49–52 (rotating the C-arm about an isocenter), 6:21–26 (angle of beam adjustable with translational movement of beam axis), 6:35–39 (rotate and move equipment along transverse axis), 6:51–63 (permitting any angle, adjusting height), 9:5–9 (discussing control of computer to components to control orientation of fan beams).

k) Preprogrammed Scan Path

408. Brummer 302 also discloses that there is a Preprogrammed Scan Path programmed into the microprocessor as required by claim 6 of the ’301 patent. Specifically, Brummer 302 discloses using the scan geometry parameters as an input to the imaging device to control image acquisition and therefore such scan geometry parameters are a preprogrammed scan path for the X-ray Equipment that are programmed into the microprocessor. For example, Figures 2 and 3 depict the scan

CONTAINS HIGHLY CONFIDENTIAL INFORMATION

geometry as an input to the imaging device and demonstrates that operator inputs can change that geometry:

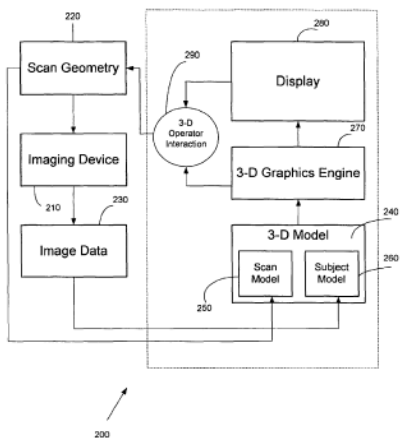

FIG. 2

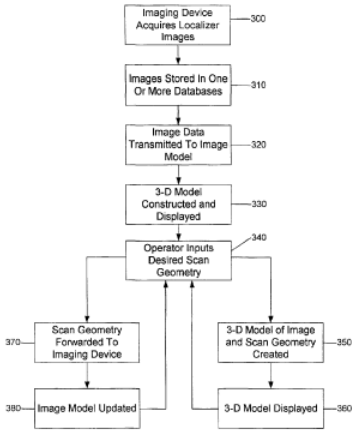

FIG. 3

Brummer 302 at Figs. 2–3; *see also* Brummer 302 at Abstract, Fig. 4, 3:65–4:4.

409. Brummer 302 specifies that the scan geometry parameters are stored in software, thus fulfilling the preprogrammed requirement:

> The imaging device 210 will typically rely on inputs from the operator to determine how the scan planes must be optimally positioned for any desired purpose. As will be described in detail below, operator-supplied inputs identifying the position of a desired scan geometry are received and parsed by one or more processors into a definition of a set of scan geometry parameters, stored in software. These parameters are stored within a scan geometry module 220 and define the geometry necessary to drive the imaging device 210 in the acquisition of image data.

Brummer 302 at 8:35–44; *see also* Brummer 302 at 12:34–51, 13:1–6, 16:8–19.

l) Convertor

410. Brummer 302 inherently discloses a Convertor, for example, as part of the referenced imaging device, that is connected to the microprocessor and detector

CONTAINS HIGHLY CONFIDENTIAL INFORMATION

array and converts a signal from the detector array. Brummer 302 at Figs. 2–4. Brummer 302 contemplates imaging using tomographic imaging and further computer processing techniques on the image data acquired. Brummer 302 at Abstract, 1:25–31, 3:51–59, 4:10–13, 4:27–38, 4:58–5:3, 8:18–24 ("to enable the interactive 3-D definition of imaging planes for a tomographic imaging device 210"), 8:27–30 (data from imaging device transferred to hardware and software of invention), 8:42–46, 11:49–65, 12:46–51, 12:57–63, claim 1. Tomographic imaging using computer processing inherently requires a Convertor to convert the analog x-ray radiation measurement obtained at the detector to a digital signal suitable for further processing. Such a Convertor would necessarily be an analog-to-digital convertor as further required by claim 3 of the '301 patent.

m) Conversion Means

411. Brummer 302, as discussed above, inherently discloses a Convertor, which is sufficient to also disclose the conversion means requirements of claim 1 of the '301 patent. Brummer 302 further discloses the use of a Merger Device as discussed below, which is connected to an analog-to-digital convertor and the microprocessor and thus sufficient to meet the requirements of claim 4 of the '301 patent.

n) Merger Device

412. Brummer 302 discloses a Merger Device as required by claim 4 of the '301 patent, specifically, Brummer 302 discloses a 3-D model device or specifically the

CONTAINS HIGHLY CONFIDENTIAL INFORMATION

subject model (block 320) of the 3-D model device, which is inherently connected to the analog-to-digital convertor (by which it gets the digital image data) and to the microprocessor. Brummer 302 at Figs. 2–4, 3:51–59 (discussing the interaction of the imaging device and 3-D model device), 4:10–13 (subject model is "for receiving image data from the imaging device"), 4:27–38 (discussing merging image data from multiple image planes), 4:58–5:3 (discussing the computer-readable code that processes the image data), 9:20–28 (discussing the 3-D model device). The 3-D model device merges image data from multiple image planes to generate the 3-D model. Brummer 302 at 4:27–38, 9:20–28, 11:49–65, claim 1. The CT scanner of Brummer 302 also inherently has a Merger Device, as all CT scanners do. The x-ray detectors in all CT scanners are connected to analog-to-digital converters, whose output goes to a Merger Device that merges data from the various detector elements before they are sent on for storage in a memory device and further processing.

o) Controller

413. Brummer 302 discloses a Controller, specifically, part of IGSD system 200 (e.g., the 3-D model device) or a computer, which includes a microprocessor (e.g., part of the controller that performs data processing, processor) and a memory device (e.g., computer readable memory such as hard disks, CD-ROMs, optical storage devices, or magnetic storage devices) connected to the microprocessor. Brummer 302 at Abstract, Figs. 2–4 (showing flow charts of processing to generate the 3-D

CONTAINS HIGHLY CONFIDENTIAL INFORMATION

model from tomographic image data, including storage of such image data), 4:25–38 (storing image data), 4:54–5:3 (storing and processing of image data), 7:7–13 (outlining memory devices), 7:21–43 (discussing computers and processors to carry out the functions described in Brummer 302), 9:20–41 (discussing that the 3-D graphics engine could be implemented using conventional computer equipment), 11:55–65 (discussing storing image data within the 3-D model device), claims 1, 8, 14, 18. The CT scanner of Brummer 302 also inherently has a Controller, as all CT scanners do. The host computer of a CT scanner, among other roles, receives inputs from the operator through Input Devices and is interfaced to various storage devices.

414. The Controller disclosed further includes means for storing and/or is adapted for storing Tomographic Models (e.g., the 3-D models) as required by claim 1 of the ’301 patent and the independent claims of the ’374 patent. Brummer 302 does not require the use of fiducial markers.

p) Computer

415. As discussed above with respect to the Controller, Brummer 302 describes implementing the 3-D modeling functions using a Computer that includes a digital memory to store the 3-D models and image data. As discussed above with respect to Dual Energy, to the extent that Brummer 302 utilizes dual energy to collect image data or is adapted to perform QCT, such image data represents patient densitometry information.

CONTAINS HIGHLY CONFIDENTIAL INFORMATION

416. Brummer 302 further discloses that the Computer includes an input, specifically the imaging device or conventional input devices such as a mouse or keyboard, and output, specifically display 425, 3-D display, display 280, which may be a CRT or LCD screen or computer display, as required by claim element 1(b) of the ’262 patent. *See* discussion above regarding Input Device and below regarding Output Device.

q) Imaging Software

417. Brummer 302 discloses imaging software associated with the Computer as required by claim element 1(h) of the ’262 patent. Specifically, Brummer 302 refers to the implementation of the 3-D modeling functions using computer program products, i.e., imaging software used to create the 3-D model. Brummer 302 at Abstract, Figs. 2–4, 1:18–22, 4:28–38, 4:54–5:13, 7:7–43, 9:15–33 (“. . . generation of the 3-D model can be performed according to well-known 3-D rendering software . . .”), 9:35–37 (“the 3-D graphics engine can include software for performing some of 3-D modeling functions of the 3-D Model device 240”), 12:57–60, 13:63–14:10 (“. . . If computer hardware and/or software implementing the present invention . . .”). The CT scanner of Brummer 302 also inherently has Imaging Software which performs CT reconstruction and other image analysis and display functions.

CONTAINS HIGHLY CONFIDENTIAL INFORMATION

r) Output Device

418. Brummer 302 discloses an Output Device, specifically, display 425, 3-D display, display 280 (which could be a CRT or LCD screen), or computer display. Brummer 302 at Abstract (3-D display), Fig. 2 (Display), Fig. 3 (3-D model displayed), Fig. 4 (display 425), 1:18–22 (discussing display of tomographic image planes in three dimensions), 3:30–44 (3-D display), 3:48–64 ("display for presenting the 3-D model"), 4:28–38 (displaying the 3-D model), 4:54–5:3 (display for displaying the 3-D model), 9:13–15 (display 280), 9:30–33 (display 380), 12:57–63 (display 425), 16:28–30 (3-D display), claim 1 (display). Those Output Devices are each connected to the microprocessor and the computer output (e.g., the 3-D model). The Output Device disclosed is further adapted for receiving a Tomographic Model from the microprocessor (e.g., the 3-D models) as discussed below.

419. As further required by claim 1 of the '262 patent, the Output Device disclosed in Brummer 302 is capable of communicating Densitometry model comparison information. *See, e.g.*, discussion below regarding Densitometry.

s) Display

420. As discussed above, Brummer 302 discloses the use of a Display as part of the Output Device. That Display displays information pertaining to the Densitometry model. *See, e.g.*, discussion below regarding Densitometry.

CONTAINS HIGHLY CONFIDENTIAL INFORMATION

t) Color Monitor

421. Brummer 302 discloses a color monitor adapted to receive the Tomographical Model output color-coded to represent Densitometry. *See* discussions below regarding Tomographical Models and Densitometry. As discussed above with respect to the Output Device and Display requirements, Brummer 302 discloses various displays, specifically, display 425, 3-D display, display 280 (which could be a CRT or LCD screen), or computer display. Brummer 302 at Abstract (3-D display), Fig. 2 (Display), Fig. 3 (3-D model displayed), Fig. 4 (display 425), 1:18–22 (discussing display of tomographic image planes in three dimensions), 3:30–44 (3-D display), 3:48–64 ("display for presenting the 3-D model"), 4:28–38 (displaying the 3-D model), 4:54–5:3 (display for displaying the 3-D model), 9:13–15 (display 280), 9:30–33 (display 380), 12:57–63 (display 425), 16:28–30 (3-D display), claim 1 (display).

422. Brummer 302 discloses that color-coded intensity values used in 2-D views could be displayed in the 3-D perspective. Brummer 302 at 3:30–35. Brummer 302 further makes clear that the 3-D model display could be in color:

> Color hints such as edge decorations or modulation of the hue in graylevels may be provided to the viewer to help the operator distinguish between multiple simultaneously displayed scans.

Brummer 302 at 3:39–42.

423. Brummer 302 further describes use of color in the display:

CONTAINS HIGHLY CONFIDENTIAL INFORMATION

> A sophisticated implementation may modulate the color of each point in the objects visualized behind the transparent object, resembling true optical transparent properties. Less capable hardware and/or software, on the other hand, may visualize the semi-transparent object by showing its color in a mesh pattern, while between mesh points the objects behind are shown.

Brummer 302 at 11:6–11.

424. Brummer 302 also discloses:

> Conventional surface rendering algorithms can assign a single color to each elementary (triangular) surface element of a complex model, or, to accommodate color gradients across a surface, interpolate color values assigned to each polygon corner point. Texture mapping technology is a mapping mechanism for adding surface color information at a higher level of detail. A texture-mapping algorithm computes and index into an array of texture color values to calculate the color at each given point of a textured polygon during rendering. Graylevel image intensities may be used as texture maps for the MRI slice surfaces.

Brummer 302 at 15:5–14. Given these disclosures of color-coding applied to the 3-D models, it is clear that the displays contemplated in Brummer 302 are Color Monitors.

u) Color Printer

425. As discussed above, Brummer 302 contemplates color-coding of the 3-D models. It would have been a natural choice for one of skill in the art implementing the disclosures of Brummer 302 to desire the ability to print such models and thus include a Color Printer with the system.

CONTAINS HIGHLY CONFIDENTIAL INFORMATION

426. In addition, other prior art makes clear that printers were routine parts of imaging systems in order to create hard-copies on paper of the images created. For example, Guenther 038 (issued with the same listed inventor) acknowledges that a printer could be added to the described imaging system. Guenther 038 at 2:52–56. Mazess 445 also discusses using compact digital printers in imaging systems. Mazess 445 at 1:45–51.

427. Likewise, as discussed above, Lemchen 739 acknowledges that a color laser printer could be used to print the color-coded images. Lemchen 739 at 2:19–26.

428. The Planmeca DIMAXIS Imaging Software User's Manual also contemplated printing pseudo-colored images using a printer. DIMAXIS 1998 at 4, 18, 51.

v) Densitometry

429. The Court construed "densitometry" to mean "quantitatively calculated bone density."

430. Brummer 302, alone, does not disclose quantitatively calculating bone density under my interpretation of that requirement. However, as discussed above, Osseo appears to be alleging that any calculation to convert analog signals representing the linear attenuation of x-rays through an object is sufficient to satisfy the Densitometry requirement under the Court's construction. I strongly disagree with Osseo's position. Nevertheless, under Osseo's interpretation, Brummer 302 discloses Densitometry because it discloses calculations to quantify the attenuation of

CONTAINS HIGHLY CONFIDENTIAL INFORMATION

radiation through the object being scanned (i.e., the gray levels or intensity values). Brummer 302 at Abstract, 3:30–64, 4:54–5:3, 8:55–9:41, 10:20–25 (". . . original image intensities (e.g., gray level image intensities) . . ."), 10:40–56 (intensity values), 12:52–67 (". . . The geometry data parameters describe the geometry of pre-existing views, augmented with an array of numbers, and image data 410, representing the intensity values across the tomographic section as measured or computed."), 15:13–14. Likewise, the 3-D model produced by the Brummer 302 methods disclosed would meet the Densitometry model limitations of the Asserted Claims under Osseo's interpretation.

431. However, in combination with other prior art, Brummer 302 discloses quantitatively calculating bone density. *See* Brummer 302 at 2:38–41 (discussing X-ray Computed Tomography, which includes within its scope to one of ordinary skill quantitative methods that may be used to calculate bone density). It would have been obvious to one of skill in the art to combine the image processing method described Brummer 302 with Densitometry methods disclosed by other prior art references to generate Densitometry models or obtain patient Densitometry information. Prior art describing Densitometry methods use the same or similar x-ray equipment to that contemplated by Brummer 302. And both densitometry methods and the image processing method of Brummer 302 use radiographic intensity data to gain information or generate an image about the object scanned.

CONTAINS HIGHLY CONFIDENTIAL INFORMATION

432. The Patents-in-Suit themselves acknowledge prior art densitometry methods were exemplified in U.S. Patent No. 5,838,765; Pelc 080; and Bisek 162. '301 patent at 2:1–6. Bisek 162 and its application to the Asserted Claims is described in detail below. Further, the inventor, Dr. Massie, admitted in deposition that his "idea" was merely to use prior art densitometry methods and apply them in a dental application. Massie Tr. at 20:22–21:7; 22:15–23, 66:16–67:6.

433. As another example, Brummer 302 disclosures could be combined with the densitometry disclosures of Mazess 445 to generate Densitometry models, provide Densitometry model comparison information, and obtain patient Densitometry information. Mazess 445 is titled "Densitometry Adapter for Compact X-ray Fluoroscopy Machine" and discusses how to perform the "necessary correction of images for the quantitative accuracy needed for bone densitometry." Mazess 445 at Abstract; *see also* Figs. 1–3, 20, 25 (showing the X-ray Equipment used and as to Figure 20, how the data is processed to generate an image), 16:1–4. Specifically, Mazess 445 further describes how to quantitatively calculate bone density. Mazess 445 at 20:46–63.

434. Muller 1996 further uses similar X-ray Equipment and also discloses imaging using 3D-pQCT to determine bone density in vivo. Muller 1996 at 1746, Fig. 1.

435. Cann 1980 also discloses Densitometry as required by the claims of the Patents-in-Suit and one of ordinary skill in the art would have been motivated to

CONTAINS HIGHLY CONFIDENTIAL INFORMATION

combine those disclosures with Brummer 302 because both discuss diagnostic imaging contemplating the use of similar equipment and Cann 1980 adds a quantitative aspect. Cann 1980 discloses measuring vertebral mineral content using computed tomography to generate quantitative bone mass measurements, including density. Cann 1980 at 493. Cann 1980 acknowledges that Dual Energy techniques could be employed as discussed above. Cann 1980 at 493–494. Cann 1980 also presents a method for quantitatively determining bone density using phantoms to adjust the CT number. Cann 1980 at 494–496, 499.

436. As with Cann 1980, Fontevraud 1984 discloses using a quantitative computed tomography method for spinal mineral assessment specifically to determine bone mineral content, including direct density measurements (e.g., mineral equivalents of K_2HPO_4 in mg/cm^3). Fontevraud 1984 at 602. Fontevraud 1984 specifically contemplates that many of the advanced CT scanners in existence then could be modified for QCT measurements at very little cost and that the approach had already been implemented at 150 sites. Fontevraud 1984 at 602. That itself provides a motivation to one of skill in the art to modify the Brummer 302 disclosures to include the teachings of Fontevraud 1984 for quantitatively calculating bone density and to use such calculations in the display of digital images and for comparison.

437. Cann 1987 further discloses that QCT could be used to measure bone density and describes several corrections to apply to increase the accuracy of such

CONTAINS HIGHLY CONFIDENTIAL INFORMATION

measurements. Cann 1987 at 257, 259–262. Both Cann 1987 and Brummer 302 contemplate using X-ray Computed Tomography. Thus, one of ordinary skill in the art may have been motivated to use the image processing methods described in Brummer 302 with the QCT methods disclosed in Cann 1987 to provide measurements and representations of quantitatively calculated bone density.

w) Tomographic Models

438. As discussed above, the Court construed Tomographic Models to require "merging information from multiple tomographic scans of an object to produce a representation of the subject/ said representation depicting quantitative density differences of the object scanned, which is created by the microprocessor in the controller using densitometry from at least one focal plane."

439. As discussed above, Brummer 302, either alone or in combination with other prior art discloses the use of Densitometry in creating the claimed 3-D models.

440. Brummer 302 further discloses that the microprocessor in the Controller merges information from multiple focal planes to depict a representation of the subject or object scanned. Specifically, Brummer 302 contemplates using image data from multiple tomographic planes to generate the 3-D model. Brummer 302 at Abstract (using "tomographic data acquisition"), Figs. 2–4 (showing processing), 1:18–19 ("The present invention generally relates to 3-dimensional tomographic imaging . . ."), 4:25–38 (discussing storing image planes as image data used to

CONTAINS HIGHLY CONFIDENTIAL INFORMATION

construct the 3-D model), 4:54–5:3 (". . . there is disclosed a computer program product for use with a data processing system for facilitating the display and visually driven definition of tomographic image planes in three-dimensional (3-D) space. . ."), 9:20–41 (describing 3-D model generation), claims 1, 8, 18 (each discussing generating the 3-D model with one or more plane images).

x) 3D

441. Certain claims require that the claimed models be three-dimensional. Brummer 302 teaches three-dimensional models, which as discussed above with respect to the Densitometry requirement, could incorporate Densitometry information. As explained above, Brummer 302 is directed at 3-D models. *See, e.g.*, Brummer 302 at Title, Abstract (3-D display), Fig. 2 (3-D Model), Fig. 3 (3-D Model), 1:18–19 ("The present invention generally relates to 3-dimensional tomographic imaging . . ."), 3:30–64 (". . . apparatus for facilitating the display and visually driven definition of tomographic image planes of a subject in three-dimensional (3-D) space. . . ."), 9:15–33 (3-D Model device).

y) Controller Storing Preexisting/Current Models

442. Brummer 302 discloses that the Controller is adapted for storing multiple Tomographic Models including preexisting and current Tomographic Models that may be compared with the Controller. *See* discussion above regarding Tomographic Models and Controller. Brummer 302 specifically describes:

CONTAINS HIGHLY CONFIDENTIAL INFORMATION

> FIG. 4 illustrates a block diagram of an interactive scan geometry definition (ISGD) system of the present invention, according to another aspect of the present invention. It will be appreciated that the block diagram illustrated in FIG. 4 accomplishes the primary functions of the system illustrated in FIG. 2. FIG. 4 shows a ISGD System 400 including a graphics engine 420 that processes image data 410 and geometry data 415 into textured computer graphics for presentation on a display 425 in a 3-D aspect view. The geometry data 415 and image data 410 ***represent preexisting tomographic views used by the invention for visual reference of anatomy to be imaged***. The geometry data parameters describe ***the geometry of pre-existing views***, augmented with an array of numbers, and image data 410, representing the intensity values across the tomographic section as measured or computed.

Brummer 302 at 12:52–67 (emphasis added).

443. In addition to these preexisting tomographic views, Brummer 302 discloses using new scan geometry to create a current image or model. Brummer 302 at 16:8–19; *see also* Brummer 302 at Figs. 2–4, claim 8.

z) Comparing Models

444. The Controller disclosed in Brummer 302 is further adapted to compare a preexisting Tomographic Model and a current Tomographic Model. Brummer 302 specifically discloses:

> Furthermore, it should be appreciated by those of skill in the art that the 3-D graphics engine 270 of the present invention is capable of ***rendering time-resolved data with the same performance as static scenes by cycling through a sequence of models, each of which contain a temporal frame of the dynamic scene***.

Brummer 302 at 9:50–54 (emphasis added).

CONTAINS HIGHLY CONFIDENTIAL INFORMATION

445. The Abstract of Brummer 302 describes how to compare preexisting and current Tomographic Models:

> Apparatuses, methods and computer program products for scan plane geometry definition in tomographic data acquisition via an interactive three-dimensional (3-D) graphical operator interface. The apparatuses, methods and computer program products are initially proposed for use in cardiac MRI, but have a much broader area of application. The apparatuses and methods utilize 3-D computer graphics aspect views of slice planes ***to show a new scan, represented as semi-transparent uniformly-colored planes. Intersections of these planes with opaque texture-mapped gray-level views of previously acquired images*** enable the orientation of a new scan to be viewed in a much more intuitive fashion. Advantageously, the apparatuses and methods of the present invention provide for more efficient elimination of positional ambiguity that is often associated with conventional 2-D intersection line views. In addition, any misregistration between localizer scans can be detected immediately in the integrated 3-D display by misalignment of anatomy in the previously acquires image planes.

Brummer 302 at Abstract (emphasis added).

3. Summary Regarding Brummer 302

446. Below I summarize my opinions with respect to Brummer 302.

447. With respect to the ’301 patent:

- Under Osseo’s interpretation of Densitometry and Tomographic Models, Brummer 302 anticipates Asserted Claims 1–4 and 6–8 of the ’301 patent;
- Brummer 302 also renders obvious Asserted Claim 5 of the ’301 patent in view of Webber 686, Bisek 162, and/or Mazess 445 with respect to a Restricted Beam;
- Brummer 302 also renders obvious Asserted Claim 5 of the ’301 patent in view of Bisek 162 and/or Mazess 445 with respect to Dual Energy;

CONTAINS HIGHLY CONFIDENTIAL INFORMATION

- Brummer 302 also renders obvious Asserted Claims 1–8 of the '301 patent in view of Webber 686, Guenther 884, and/or Mazess 445 with respect to X-ray Equipment;
- Brummer 302 also renders obvious Asserted Claims 1–8 of the '301 patent in view of Webber 686, Guenther 884, Virta 793, and/or Bisek 162 with respect to a Positioning Motor;
- Brummer 302 also renders obvious Asserted Claim 2 of the '301 patent in view of Webber 686, Guenther 884, and/or Bisek 162 with respect to a Single Axis;
- Brummer 302 also renders obvious Asserted Claim 8 of the '301 patent in view of Guenther 038, DIMAXIS 1998, and/or Lemchen 739 with respect to the Color Printer.

448. With respect to the '262 patent:

- Under Osseo's interpretation of Densitometry and Tomographic Models, Brummer 302 anticipates Asserted Claims 1, 2, 4 and 6 of the '262 patent;
- Brummer 302 renders obvious Asserted Claim 3 of the '262 patent (not charted by Osseo) in view of Franke 537 with respect to Intraoral Source; and
- Brummer 302 also renders obvious Asserted Claims 1–4 and 6 of the '262 patent in view view of Bisek 162, Mazess 445, Muller 1996, Cann 1980, Fontevraud 1984, and/or Cann 1987 with respect to Densitometry.

449. With respect to the '374 patent:

- Under Osseo's interpretation of Densitometry and Tomographic Models, Brummer 302 renders obvious Asserted Claims 1–4, 6–10 and 12–24 of the '374 patent in view of Webber 686, Bisek 162, and/or Mazess 445 with respect to a Restricted Beam;
- Brummer 302 also renders obvious Asserted Claims 1–4, 6–10 and 12–24 of the '374 patent in view of Webber 686, Guenther 686, and/or Mazess 445 with respect to X-ray Equipment;
- Brummer 302 renders obvious Asserted Claims 4, 10, 16 and 20 of the '374 patent in view of Webber 686, Guenther 884, and/or Bisek 162 with respect to a Single Axis

CONTAINS HIGHLY CONFIDENTIAL INFORMATION

- Brummer 302 renders obvious Asserted Claims 2, 8, 14, 18, 22 and 24 of the ’374 patent in view of Bisek 162 and/or Mazess 445 with respect to Dual Energy;
- Brummer 302 renders obvious Asserted Claims 7, 17 and 23 of the ’374 patent in view of Bisek 162 and/or Mazess 445 with respect to a Cone Beam;
- Brummer 302 renders obvious Asserted Claims 1–4, 6–10 and 12–24 of the ’374 patent in view of Webber 686, Guenther 884, Virta 793, and/or Bisek 162 with respect to a Positioning Motor; and
- Brummer 302 also renders obvious Asserted Claims 1–4, 6–10 and 12–24 of the ’374 patent in view of Bisek 162, Mazess 445, Muller 1996, Cann 1980, Fontevraud 1984, and/or Cann 1987 with respect to Densitometry.

E. Bisek 162 in Combination with Other Prior Art

1. Bisek 162

450. U.S. Patent No. RE 36, 162 to Bisek *et al*. (“Bisek 162,” PlanmecaPA000184–195) was filed August 26, 1996, claiming priority to applications dating back to 1992, and issued March 23, 1999. Bisek 162, titled “Whole Body Dual-Energy Bone Densitometry Using a Narrow Angle Fan Beam to Cover the Entire Body in Successive Scans,” lists Joseph P. Bisek, Richard B. Mazess, and Jixing Chen as inventors, and was assigned to Lunar Corporation. As noted above, Bisek and Mazess were also listed inventors on Mazess 445, which was also assigned to Lunar Corporation.

451. Bisek 162 is incorporated by reference into the specification of the Patents-in-Suit.

CONTAINS HIGHLY CONFIDENTIAL INFORMATION

2. Bisek 162 and Other Prior Art Applied to the Asserted Claims of the Patents-in-Suit

452. Below I describe in summary how Bisek 162 anticipates and/or, in combination with other specified prior art, renders obvious the limitations of each asserted claim of the 374 patent and the 301 patent. I have reviewed the invalidity contentions served by Planmeca, including the chart identifying disclosures of Bisek 162 and, as necessary, other prior art against the claim limitations. I agree with that chart and attach it as **Exhibit 9** as further evidence in support of my opinion that Bisek 162 either alone, or in combination with the other identified references, anticipates or renders obvious each asserted claim. I reserve the right to rely on disclosures identified in **Exhibit 9** in addition to those listed below.

a) X-ray Equipment

453. Bisek 162 discloses the use of X-ray Equipment, including both an x-ray source, for example, radiation source 44 (x-ray tube), and a detector array, for example, adjacent detector elements 47 that form linear detector array 50. Bisek 162 at 5:59–65 (discussing radiation source 44 which is an x-ray tube), 5:66–6:9 (describing linear detector array 50 comprised of adjacent detector elements 47), 6:9–18 (discussing the detector array's ability to measure two energy bands for dual energy measurements). Figure 1 depicts the orientation of the X-ray Equipment:

CONTAINS HIGHLY CONFIDENTIAL INFORMATION

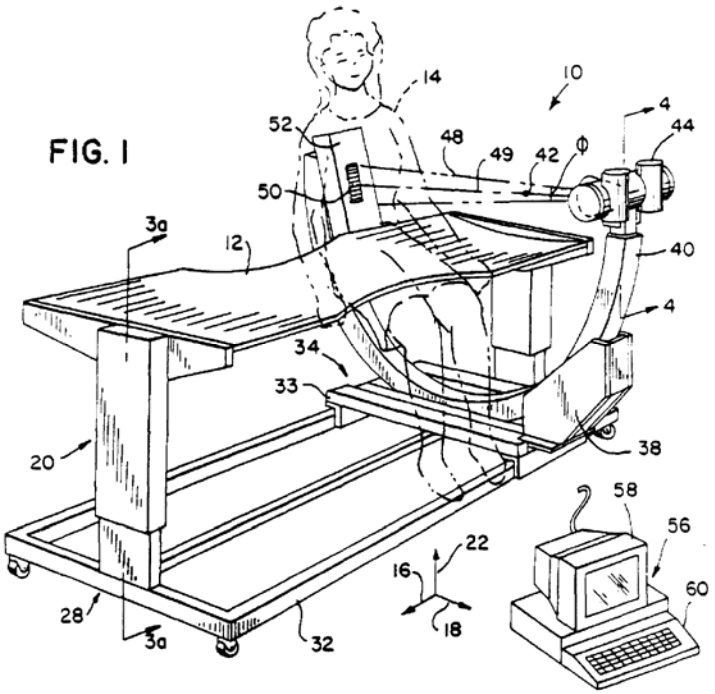

Bisek 162 at Fig. 1; 3:49–51.

454. Bisek 162 also generally discusses conventional scanning radiographic equipment, including equipment that uses a fan beam and a small area array, but in so doing mentions systems that use a broad cone beam. Bisek 162 at 1:25–33, 1:64–2:1.

b) Single Axis Rotation

455. Bisek 162 discloses that the system has a longitudinal axis 16 for the x-ray source, for example, radiation source 44, travels along this axis and is also capable of rotating about this axis. Bisek 162 at Fig. 1, 6:35-39. The system of Bisek 162 is also able to rotate around a vertically oriented axis of rotation using the turntable 39. Bisek 162 at Fig. 3c, 5:36–47, 5:49–52, 6:21–26, 6:35–39.

CONTAINS HIGHLY CONFIDENTIAL INFORMATION

c) Restricted Beam Device

456. As further required by certain Asserted Claims, Bisek 162 also discloses the use of a restricted beam device. Specifically, it discloses that scanning radiographic equipment employ a narrowly collimated beam such as a fan beam. Bisek 162 at 1:25-29. The whole-body dual-energy bone densitometry device of Bisek 162 produces a narrow angle fan beam and thus includes a restricted beam device. Bisek 162 at Title, 5:66-67, 6:9–18.

d) Dual Energy

457. Bisek 162 discloses that the X-ray Equipment may comprise a dual energy level, restricted beam device. The Restricted Beam Device described above is Dual Energy as explained in Bisek 162. Bisek 162 at Title, 1:34–43 (describing using dual energy techniques), 1:48–51 (dual energy techniques), 6:9–18 (discussing the fan beam detector's ability to measure the x-ray intensity in two energy bands and thereby taking dual energy measurements at each point in the scan), 10:55–62 (discussing dual energy imaging techniques).

e) Cone Configuration

458. Bisek 162 further discloses that an x-ray source may emit an x-ray beam comprising a Cone Configuration. Bisek 162 at 1:25–28 (comparing fan beams to a broad area cone beam).

CONTAINS HIGHLY CONFIDENTIAL INFORMATION

459. While the disclosed embodiments in Bisek 162 do not use a Cone Configuration of the x-ray beam, Bisek 162 recognizes that a limited (collimated or restricted) x-ray beam increases accuracy of measurement. Bisek 162 at 1:66–2:1. It thus would have been obvious to one of skill in the art to substitute the disclosed fan beam with a narrow cone-shaped beam, which was known in the art at the time of the claimed priority date. Indeed, Bisek 162 states that a scanning system replaces a sheet of radiographic film with a small area array of detector elements. Bisek 162 at 1:31–33. A small area array of detectors is irradiated by a narrow cone beam.

460. In addition, other prior art using similar X-ray Equipment disclosed a Cone Configuration that could have been used in the Bisek 162 system by slight modifications to the x-ray source and minor variations to data processing implemented in software. For example, Mazess 445 (which shares two inventors with Bisek 162) describes using equipment similar to that disclosed in Bisek 162 to emit an x-ray beam in a cone configuration. Mazess 445 at 15:64–16:9 (". . . the x-ray source 322 projects a cone-beam of x-ray radiation . . .").

461. As another example, Franke 537 further exemplifies the cone configuration used in prior art systems. The shape is typically created by passing the x-ray beam through an aperture as shown in Figure 1:

CONTAINS HIGHLY CONFIDENTIAL INFORMATION

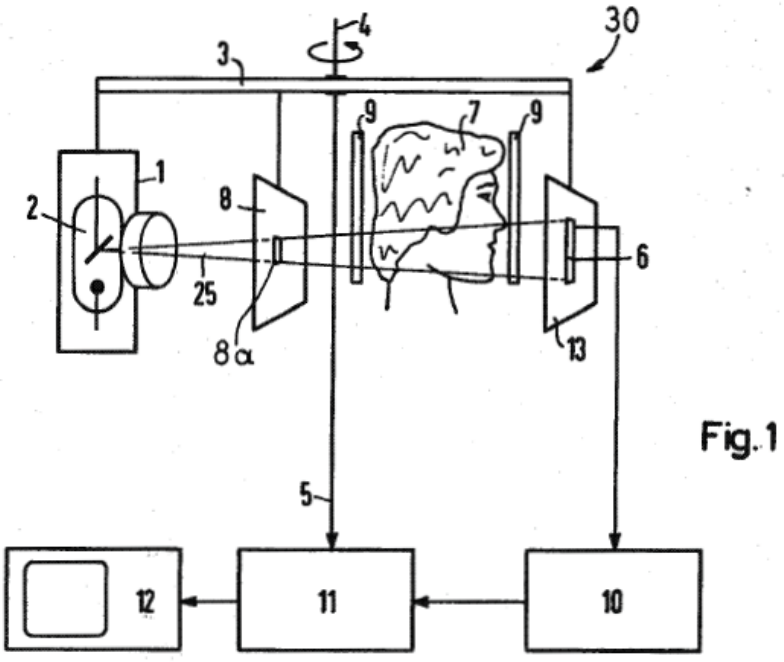

Franke 537 at Fig. 1; *see also* Franke 537 at Figs. 2–3, 3:61–64.

f) Input Device

462. Bisek 162 discloses an Input Device, for example, keyboard 60, that is connected to the microprocessor of the disclosed system. Bisek 162 at 6:51–55 (keyboard 60). The keyboard 60 allows input by the operator to the computer (which contains the microprocessor) so that the computer may control the movement of the X-ray Equipment and associated components of the system. Bisek 162 at 6:48–63.

g) Positioning Motor

463. Bisek 162 discloses the use of a Positioning Motor connected to the microprocessor of the system that moves in response to signals or commands from the microprocessor. Specifically, Bisek 162 discloses motors that are connected to

CONTAINS HIGHLY CONFIDENTIAL INFORMATION

the microprocessor (inside the computer) and responsive to the computer's commands:

> By providing step commands to the motors associated with the various components above described, the computer 56 may control and locate these components, for example, by adjusting and tracking the height of the table 12 through actuators 30. The computer 56 also turns the radiation source 44 on and off and importantly collects digitized attenuation data from the individual elements of the linear detector array 50 to generate a matrix of measured data elements over the patient 14.

Bisek 162 at 6:55–63; *see also* Bisek 162 at 5:23–28 (discussing the stepper motor), 5:44–48 (discussing stepper motors driving belts), 6:51–55 (actions of the components controlled by the computer).

h) Three Axes

464. Bisek 162 further discloses that the Positioning Motor(s) (described above) are adapted for positioning the X-ray Equipment (described above) with respect to three axes of movement as required by claim 2 of the '301 patent. *See* Bisek 162 at Fig. 1. Specifically, Bisek 162 describes:

> By providing step commands to the motors associated with the various components above described. The computer 56 may control and locate these components, for example, by adjusting and tracking the height of the table 12 through actuators 30. The computer 56 also turns the radiation source 44 on and off and importantly collects digitized attenuation data from the individual elements of the linear detector array 50 to generate a matrix of measured data elements over the patient 14.

CONTAINS HIGHLY CONFIDENTIAL INFORMATION

Bisek 162 at 6:55–63; *see also* Bisek 162 at 5:23–28 (controlling the positioning of the table in the vertical or z direction), 5:36–52 (describing positioning in the x and y directions), 6:21–26 (describing translation of the beam axis across the patient and control of the angle of the fan beam with respect to the patient), 6:35–39 (both rotation and transverse movement possible), 6:51–55 (control of computer of moveable components).

465. Bisek 162 further describes that ". . . proper orientation of the fan beams 48(a)–(d) is thus performed by a set of motions of the various components of the densitometry working together under the control of computer 56." Bisek 162 at 9:5–9.

i) Preprogrammed Scan Path

466. Bisek 162 also discloses that there is a preprogrammed scan path programmed into the microprocessor as required by claim 6 of the '301 patent. Specifically, the computer controls the movement of the densitometer components in a preprogrammed scan path over the patient. Bisek 162 at Fig. 1, 3:49–51, 6:51–63, 9:5–9. Regarding scan paths, Bisek 162 describes:

> For a whole body scan of a patient 14, the detector array 50 can be oriented transversely as indicated by 50(b) so as to scan longitudinally as indicated by the sequence of areas A1, B1 and C1 from the patient's head to the patient's foot. During this scanning, the fan beam axis 49 traces a first path 59. At the end of this scan, a second longitudinal row of data would be taken conforming generally to the sequence of areas A2, B2 and C2 with fan beam axis tracing along second path 61, from

CONTAINS HIGHLY CONFIDENTIAL INFORMATION

> the patient's foot to the patient's head. Four to five such longitudinal rows may be required for a full body scan.
>
> Typically, at the conclusion of the scan of the first path 59, following the sequence Al, Bl, Cl. . . . both the radiation source 44 and detector army [*sic*] 50 would both be moved transversely so that the fan beam axis 49, still vertical intercepts the second scan path 61.

Bisek 162 at 6:67–7:15. Bisek 162 also discloses rotation of the fan beam in sequential longitudinal translations, which comprise preprogrammed scan paths. Bisek 162 at 7:62-8:27.

j) Convertor

467. Bisek 162 further discloses a convertor, for example, the analog to digital converter, that is connected to the microprocessor and detector array and converts a signal from the detector array. Specifically, Bisek 162 describes that the transmitted radiation produces electrical signals that are converted by an analog to digital converter for further processing by the computer. Bisek 162 at 1:34–43, 6:59–63.

k) Conversion Means

468. Bisek 162 as disclosed above discloses a Convertor, which is sufficient to also disclose the conversion means requirements of claim 1 of the '301 patent. Bisek 162 further discloses the use of a Merger Device as discussed below, which is connected to an analog-to-digital convertor and the microprocessor and thus sufficient to meet the requirements of claim 4 of the '301 patent.

CONTAINS HIGHLY CONFIDENTIAL INFORMATION

l) Merger Device

469. Bisek 162 discloses a Merger Device connected to the analog to digital converter and to the microprocessor as required by claim 4 of the ’301 patent. Specifically, Bisek 162 specifies that the multiple dual energy measurements must be merged. Bisek 162 at 1:34–43, 1:54–57, 2:67–3:2 (”[t]he signals obtained along the first and second path are then combined to produce a two dimensional projection image”), 6:59–63. Bisek 162 states that the computer 56 “importantly collects digitized attenuation data from the individual elements of the linear detector array 50 to generate a matrix of measured data elements over the patient 14.” Bisek 162 at 6:59-63. Thus, computer 56 of Bisek 162 has a Merger Device since the measured data from multiple readings of multiple detector elements are merged into a matrix.

470. Other prior art that uses similar X-ray Equipment also explicitly discloses a Merger Device and one of ordinary skill in the art would naturally include such Merger Devices in the Bisek 162 system to merge the data collected from the disclosed dual energy levels. For example, Webber 686 discloses buffer 56, which is a Merger Device. Webber 686 at Fig. 8, 10:39–48.

471. As another example, Mazess 445 discloses a Merger Device, specifically, Mazess 445 discloses the CCD camera and image processor 27 connected to the analog-to-digital convertor. *See* Mazess 445 at Figs. 6, 32. As described in Mazess 445, additional functionality within the CCD camera merges data from a variety of

CONTAINS HIGHLY CONFIDENTIAL INFORMATION

points and provides that data to the processor in the computer. Mazess 445 at 6:38–67. There is therefore a Merger Device in the Convertor disclosed in Mazess 445.

472. Mazess 445 also discloses that the adapted fluoroscopy machine can be operated in a quantitative dual energy mode to obtain densitometric data in a similar way to that disclosed in Bisek 162. Mazess 445 at 1:59–2:3. Figure 32 shows a flow chart of how the software executed by the processing computer works including the merger at step 390. Mazess 445 at Fig. 32, 3:65–67, 18:24–40; *see also* Fig. 9 (embodiment that merges current pixels with average by weights). Step 390 and later processing steps are described in Mazess 445 as follows with the data from high energy and low energy absorption merged in later steps within the image processor. Mazess 445 at 18:47–65.

473. As another example, Brummer 302 discloses a Merger Device, specifically, Brummer 302 discloses the 3-D model device or specifically the subject model (block 320) of the 3-D model device, which is inherently connected to the analog-to-digital convertor (from which it gets the digital image data) and to the microprocessor. Brummer 302 at Figs. 2–4, 3:51–59 (discussing the interaction of the imaging device and 3-D model device), 4:10–13 (subject model is "for receiving image data from the imaging device"), 4:27–38 (discussing merging image data from multiple image planes), 4:58–5:3 (discussing the computer-readable code that processes the image data), 9:20–28 (discussing the 3-D model device). The 3-D

CONTAINS HIGHLY CONFIDENTIAL INFORMATION

model device merges image data from multiple image planes to generate the 3-D model. Brummer 302 at 4:27–38, 9:20–28, 11:49–65, claim 1.

m) Controller

474. Bisek 162 also discloses a Controller, specifically, a computer such as computer 56, which inherently includes a microprocessor and a memory device connected to the microprocessor to perform the described functions and which, as is discussed below, is further adapted to store Tomography Models. Bisek 162 at Fig. 1 (computer 56), 3:49–51 (controlling computer), 6:51–55 (computer 56 that controls the components), 6:59–62 (computer 56 controls radiation source 44), 9:5–9 (computer 56 controls densitometer components). Bisek 162 does not require the use of fiducial markers.

n) Output Device

475. Bisek 162 discloses an Output Device, specifically, display terminal 58, which is connected to the microprocessor of the computer and the computer output. Bisek 162 at Fig. 1, 1:34–43 (discussing development of an image based on computer processing by mathematical analysis of the composition of the material by dual energy techniques), 6:50–55 (display terminal 58 as part of computer 56). The Output Device disclosed is further adapted for receiving a Tomographic Model from the microprocessor (as discussed below regarding Tomographic Models).

CONTAINS HIGHLY CONFIDENTIAL INFORMATION

o) Color Monitor

476. Bisek 162 does not explicitly state that display terminal 58 is a color monitor adapted to receive the tomographical densitometry model output color-coded to represent Densitometry. However, given that Bisek 162 was directed at densitometry and it was known to color-code radiation attenuation results (*see* DIMAXIS 1998 at 18, 51), it would have been a natural design choice for one of skill in the art to have color-coded the images resulting from the Bisek 162 disclosed Densitometry methods and to have used a Color Monitor to display such images.

477. Other prior art makes explicit that Color Monitors could be used to display images resulting from the use of similar X-ray equipment. As an example, the article Muller 1996 discusses using Gouraud shading, which simulates the differing effects of light and color, to create a realistic representation of the bone being imaged. Muller 1996 at 1746; Fig. 1. Similar to the Bisek 162 densitometry methods for creating an image of an object based on mathematical calculations of bone density, Muller 1996 used three-dimensional peripheral quantitative computed tomography (3D-pQCT) and an analysis of bone density to create the images shown and described. Muller 1996 at Abstract.

478. As another example, Lemchen 739 describes a prior art combined CSPECT display terminal 26 that displays a color-shaded image of combined CT and Single Photon Emission Computed Tomographic ("SPECT") data that may be printed to a

CONTAINS HIGHLY CONFIDENTIAL INFORMATION

color laser printer 28. Lemchen 739 at 2:19–26. The invention described in Lemchen 739 builds on this prior art and incorporates color-coding of images (including those generated from an x-ray exposure and detection system, three dimensional contours scanning system, and a surface image scanning system and composite images from all of the systems) and display on monitor 16. Lemchen 739 at 4:43–52; 6:28–32, 6:58–7:4, 7:13–24, 8:28–34, 8:62–9:9. Lemchen therefore discloses a Color Monitor.

479. Brummer 302 describes 3-D visualization techniques to take 2-D images from object scans and create 3D images while retaining the "color-coded intensity values." Brummer 302 at 3:30–35, 3:39–42. Brummer 302 describes an image display which could either be a CRT or a liquid crystal display (LCD) screen and notes that a "sophisticated implementation may modulate the color of each point in the objects visualized." Brummer 302 at 8:28–34, 11:6–11, 15:5–17. Brummer 302 therefore also describes a display that is a Color Monitor.

p) Color Printer

480. Bisek 162 does not explicitly disclose a Color Printer—one adapted to print images color-coded to correspond to the Densitometry of the Tomographic Models. However, it would have been a natural design choice for one of skill in the art to color-code the Densitometry calculated by the Bisek 162 disclosed methods and to

CONTAINS HIGHLY CONFIDENTIAL INFORMATION

print such color-coded images using a Color Printer. Such Color Printers were known in the art.

481. For example, Lemchen 739 acknowledges that a color laser printer could be used to print color-coded images. Lemchen 739 at 2:19–26.

482. As another example, the Planmeca DIMAXIS Imaging Software User's Manual also contemplated printing pseudo-colored images using a printer. DIMAXIS 1998 at 4, 18, 51.

q) Densitometry

483. The Court construed "densitometry" to mean "quantitatively calculated bone density." Bisek 162 explicitly discloses quantitatively calculated bone density and is incorporated by reference into the Patents-in-Suit as an example of disclosures of densitometry methods. Bisek 162 at Title ("Whole-Body Dual-Energy Bone Densitometry . . ."), Abstract, 1:34–43 ("mathematical analysis of the composition of the attenuating material by dual energy techniques" and generation of a radiographic attenuation image), 3:49–51 (densitometer), 10:55–62 (". . . value of each data element 77 is derived from measurements of the patient at two energy levels . . . the data element value indicates the bone mineral content of the volume of the patient corresponding to the data element location.").

CONTAINS HIGHLY CONFIDENTIAL INFORMATION

r) Tomographic Models

484. As discussed above, the Court construed Tomographic Models to require "merging information from multiple tomographic scans of an object to produce a representation of the subject/ said representation depicting quantitative density differences of the object scanned, which is created by the microprocessor in the controller using densitometry from at least one focal plane."

485. Bisek 162 teaches merging information from multiple scans of a patient, for example scan paths 59 and 61, to produce a representation of the patient's structure being scanned that depicts quantitative density differences of the structure (or object) scanned. Bisek 162 at Title ("Whole-Body Dual-Energy Bone Densitometry Using a Narrow Angle Fan Beam to Cover the Entire Body in Successive Scans"), Fig. 1, 1:34–43 (computer equipment creates attenuation image and performs mathematical analysis of the composition of the attenuating material by dual energy techniques), 6:64–7:31, 7:66–8:21 (discussing multiple scans and focal planes). That representation is created in the Controller (e.g., computer 56) using the microprocessor contained therein. Bisek 162 at 1:34–43 (digital values for transmitted radiation later processed by computer equipment to form a attenuation image and allow mathematical composition analysis), 3:49–51, 6:51–55, 6:59–63 (matrix of measured data elements over the patient), 9:5–9 (demonstrating control by the computer). As shown in Figure 6 of Bisek 162, the disclosed system is able

CONTAINS HIGHLY CONFIDENTIAL INFORMATION

to collect projections from multiple directions. Although Bisek 162 does not explicitly disclose computing tomograms from such data, doing so was well known in the art, for example as disclosed by Cann 1980. Therefore, Bisek 162, together with these references, discloses Tomographic Models.

486. Further, as discussed extensively above, it was known in the art to create Tomographic Models using similar X-ray Equipment to that used in Bisek 162. It would have been natural for one of skill in the art to combine the disclosures of Bisek 162, which teaches successive dual-energy x-ray scans to generate Densitometry information, with disclosures of other prior art that discloses tomography techniques for processing x-ray attenuation data. For example, Webber 686 discloses tomosynthetic processing by the microprocessor of the Controller to transform information from multiple scans at multiple angles into a three-dimensional representation of the object scanned. Webber 686 at Figs. 7–8, 5:52–59, 7:49–8:14, 10:10–23; *see also* Webber 686 at 1:64–67, 2:14–18. Combining the teachings of Webber 686 and Bisek 162 would therefore yield the claimed Tomographic Models.

487. As another example, the Densitometry teachings of Bisek 162 could be combined with the teachings of Guenther 884, which discusses merging information to create a panoramic tomogram of the patient's dental structure from multiple focal planes, including through digital image processing. Guenther 884 at 2:46–61 (turning the x-ray source and x-ray detector so that it orbits the patient's head), 5:15–

CONTAINS HIGHLY CONFIDENTIAL INFORMATION

21, claims 1, 13–14. Particularly, in combination with the Bisek 162 disclosures disclosing Dual Energy Densitometry methods as described above, it would have been obvious to one of skill in the art to modify these methods to include merging information from multiple tomographic scans (e.g., at different energy levels) in order to produce a Tomographic Model that uses Densitometry information to construct the model.

488. As another example, the Densitometry methods disclosed in Bisek 162 could be combined by one of ordinary skill in the art with the disclosures of Brummer 302 to generate the claimed Tomographic Models. Brummer 302 discloses that the microprocessor in the Controller merges information from multiple focal planes to depict a representation of the subject or object scanned. Specifically, Brummer 302 contemplates using image data from multiple tomographic planes to generate the 3-D model. Brummer 302 at Abstract (using "tomographic data acquisition"), Figs. 2–4 (showing processing), 1:18–19 ("The present invention generally relates to 3-dimensional tomographic imaging . . ."), 4:25–38 (discussing storing image planes as image data used to construct the 3-D model), 4:54–5:3 (". . . there is disclosed a computer program product for use with a data processing system for facilitating the display and visually driven definition of tomographic image planes in three-dimensional (3-D) space. . ."), 9:20–41 (describing 3-D model generation), claims 1, 8, 18 (each discussing generating the 3-D model with one or more plane images).

CONTAINS HIGHLY CONFIDENTIAL INFORMATION

s) 3D

489. Certain claims require that the claimed models be three-dimensional. Bisek 162, in combination with other prior art, teaches three-dimensional models. Tomographic Models are discussed above. Such Tomographic Models are three-dimensional.

490. Other prior art disclosing 3D models could be combined with the disclosures in Bisek 162 to render obvious this requirement. It was known in the art to take data from tomographic and/or densitometric imaging and create a 3D representation. For example, Webber 686 is an example of such prior art that discloses the 3D requirement of the Asserted Claims. Webber 686 teaches 3-D models (i.e., the three-dimensional image generated by the disclosed tomosynthetic process). Webber 686 at Abstract, 5:58–59, 8:9–14.

491. As another example, Brummer 302 uses 3D computer graphics techniques to represent computed tomography information in three dimensions. Brummer 302 at Abstract, Figs. 2–4, 1:18–22, 3:30–64, 4:5–13. Although Brummer 302 focuses on use of such techniques with information derived from MRIs to generate 3D models, it acknowledges that the same techniques could be used with other imaging systems. Brummer 302 at 1:43–48.

492. Muller 1996 also discloses the 3D requirement, specifically, use of 3D-pQCT to generate models of bone structure. Muller 1996 at Abstract, Fig. 1, 1746.

CONTAINS HIGHLY CONFIDENTIAL INFORMATION

t) Controller Storing Preexisting/Current Models

493. Bisek 162, in combination with other prior art, discloses that the Controller is adapted for storing multiple Tomographic Models including preexisting and current Tomographic Models that may be compared with the Controller. As discussed above, Bisek 162 discloses the required Controller and storage of Tomographic Models. The listed inventor on the Patents-in-Suit readily admits that comparing preexisting and current models of dental structure was known in the art prior to the claimed invention. Massie Tr. at 68:10–21. While the inventor referenced x-ray films in his testimony, it evidences the inherent need for a dentist to compare prior models of a patient's dental structure to current models and the need to store such models. Storage of such models was within the knowledge of one of skill in the art at the time of the claimed invention as evidenced by the art discussing generation of such Tomographic Models.

494. For example, Brummer 302 discusses the ability to compare an image produced from a prior scan to a new scan, thus requiring storage of both pre-existing and current Tomographic Models. Brummer 302 at Abstract, Figs, 2–4 (indicating storage of images and image models), 4:25–38, 4:54–5:3, 11:49–65, claims 8, 14.

495. Mazess 445 also discloses the ability to compare a preexisting Tomographical Model (e.g., image 86) to a current Tomographical Model (e.g., image 86′). Mazess

CONTAINS HIGHLY CONFIDENTIAL INFORMATION

445 at 7:16–27, 18:24–32 (discussing computer memory to process and store images), 20:46–63 (discussing density calculations).

u) Comparing Models

496. As discussed above, the Controller disclosed in Bisek 162 as modified by prior art may be adapted to compare a preexisting Tomographic Model and a current Tomographic Model.

3. Summary Regarding Bisek 162

497. Below I summarize my opinions with respect to Bisek 162.

498. With respect to the ’301 patent:

- Bisek 162 renders obvious Asserted Claims 1–6 of the ’301 patent in view of Cann 1980, Webber 686, Guenther 884, and/or Brummer 302 with respect to Tomographic Modeling;
- Bisek 162 also renders obvious asserted claim 7 of the ’301 patent in view of DIMAXIS 1998, Muller 1996, Lemchen 739, and/or Brummer 302 with respect to the Color Monitor;
- Bisek 162 also renders obvious asserted claim 8 of the ’301 patent in view of DIMAXIS 1998, and/or Lemchen 739 with respect to the Color Printer;
- Bisek 162 also renders obvious asserted claim 4 of the ’301 patent in view of Webber 686, Mazess 445, and/or Brummer 302 with respect to a Merger Device; and
- Bisek 162 also renders obvious Asserted Claims 1–8 of the ’301 patent in view of Mazess 445 and/or Brummer 302 with respect to Storing Models.

499. With respect to the ’374 patent:

- Bisek 162 renders obvious Asserted Claims 1–4, 6–10 and 12–24 of the ’374 patent in view of Cann 1980, Webber 686,

CONTAINS HIGHLY CONFIDENTIAL INFORMATION

Guenther 884, and/or Brummer 302 with respect to Tomographic Modeling;

- Bisek 162 renders obvious Asserted Claims 7, 17 and 23 of the ’374 patent in view of Mazess 445, and/or Franke 537 with respect to Cone Configurations;
- Bisek 162 also renders obvious Asserted Claims 3, 9, 13–24 of the ’374 patent in view of Webber 686, Brummer 302, and/or Muller 1996 with respect to 3D Models; and
- Bisek 162 also renders obvious Asserted Claims 6 and 12 of the ’374 patent in view of Brummer 302, and/or Mazess 445 with respect to Storing Models.

F. Secondary Considerations

500. I have reviewed Osseo’s response to Planmeca’s Interrogatory No. 6 regarding secondary considerations of nonobviousness, and it does not change my obviousness opinions as specified above. I reserve the right to address any secondary considerations that Osseo raises with greater specificity in the future.

IX. Lack of Evidence in the Specification to Convey Possession of the Claimed Invention or Provide Enablement

501. Above, I have discussed the disclosure of the Patents-in-Suit. With respect to the Asserted Claims, there are several claim requirements not disclosed in or enabled by the written description of the Patents-in-Suit.

502. For example, “densitometry model” is a requirement of every claim, either explicitly or through the use of the term “tomographic model(s),” which the Court construed to require creation “by the microprocessor in the controller using densitometry from at least one focal plane.” There is no disclosure in the Patents-

CONTAINS HIGHLY CONFIDENTIAL INFORMATION

in-Suit of how to quantitatively calculate bone densitometry models from measurements of radiation through an object.

503. In addition, the Court rejected Planmeca's proposed inclusion in the construction of "densitometry" of a requirement that the calculated bone density be made from "detected and merged intensity values at dual energy levels." Therefore, the scope of "densitometry" includes calculations from single energy level measurements. The Patents-in-Suit generally describe collecting measurements at dual energy levels and then incorporate by reference Bisek 162 for how to generate a model from such dual-energy densitometry. '301 patent at 5:6–15. This presents two shortcomings to the level of disclosure in the Patents-in-Suit. First, there is no description or explanation of how to generate a densitometry model from single energy level measurements that are used to quantitatively calculate a bone density. Second, since Bisek 162 does not describe tomographic bone densitometry, even considering art incorporated by reference, there is no teaching of how to produce such models if they need to be tomographic or 3D.

504. The written description of the Patents-in-Suit also does not demonstrate that the inventor had possession of or enabled the "3D" requirement of certain Asserted Claims ('262 patent, claims 1–4, & 6, '374 patent, claims 3, 9, & 13–24). For each of the Patents-in-Suit, Osseo claims a priority date back to the December 1, 1999 filing date of the application that issued as the '301 patent. Nowhere in the

CONTAINS HIGHLY CONFIDENTIAL INFORMATION

specification for the ’301 patent or the claims is there a disclosure for how to create a 3D model based on quantitatively calculated bone density as required by the Asserted Claims with a “3D” requirement. The specification of the ’301 patent does not even mention or discuss 3D (or three-dimensional) models. Further, the original claims filed in the December 1, 1999 application do not contain a three-dimensional requirement. There is therefore no evidence in the written description that Dr. Massie contemplated a three-dimensional requirement, much less enabled such a requirement by explaining how to process radiation data to quantitatively calculate bone density in three dimensions (which would have required some sort of correction for beam-hardening artifacts and the like) and production of a model from that information.

505. To the extent that Osseo would argue that the 3D requirement of certain Asserted Claims of the ’262 patent and the ’301 patent derives its written description from the ’262 patent, which was filed January 24, 2003, there is nothing in the additional disclosures of the ’262 patent written description that explains how to create the required 3D models. The only text added in the ’262 patent specification relevant to the three-dimensional requirement is that “3D imaging can be provided with the system and method whereby fractures and other lesions, which are difficult to detect in 2D imaging, can be made apparent.” ’262 patent at 8:22–25. In my

CONTAINS HIGHLY CONFIDENTIAL INFORMATION

opinion, that is merely a concept and not a description of how quantitative bone density could be calculated and then used to create a three-dimensional model.

506. In the ’374 patent, claims 4, 10, 16, and 20 contain a requirement that “said x-ray source travels along a single axis: and then that “said x-ray source simultaneously rotates around said single axis.” There is no disclosure in the ’374 patent that demonstrates Dr. Massie contemplated simultaneous rotation around the same axis that the x-ray source travels along. Those requirements are not described or enabled in the specification of the ’374 patent. The written description describes the ability to position the source and detector to move through three axes of movement but does not describe rotation of the source nor rotation around the same axis that the x-ray source is traveling along.

507. The written description of the Patents-in-Suit further does not enable nor evidence possession of the claimed invention with respect to “comparing” the claimed models. Specifically, support for the following “comparing” limitations is lacking in the written description:

- “said controller is further adapted to compare said first tomographic model with said second tomographic model”: ’374 patent, claims 6, 12;
- “said controller being adapted for creating, storing, and comparing 3D digital tomographic models of an object without use of fiducial markers of said object”: ’374 patent, claims 13, 21;

CONTAINS HIGHLY CONFIDENTIAL INFORMATION

- "wherein said controller is adapted to compare a pre-existing tomographic model with a current tomographic model": '374 patent, claims 15, 19;
- "said computer creating, storing and comparing three-dimensional densitometry models . . .": '262 patent, claim 1; and
- "an output device connected to said computer output and communicating densitometry model comparison information": '262 patent, claim 1.

508. The written description only refers to comparison at a very high level. For example, in the Background of the Invention, the specification mentions that "Digital BMD patient models are also used for comparison purposes with standard models and with patients' own prior BMD histories." '301 patent at 2:14–16. That is the only reference to comparing models in the written description and in my opinion is not sufficient to demonstrate that the inventor had possession of how to actually compare models, or that the specification enables one of ordinary skill in the art to compare models without undue experimentation. The other references to comparison in the specification are referring to comparing one model with densitometry parameters in a database (not comparing one model to another model) and do not provide specific details of how to carry out that comparison. '301 patent at Fig. 2, 2:41–45, 2:56–59, 5:18–21. Importantly, I note that in these claim elements, the "compare" step is being done by the controller. Thus, this cannot be met by the operator comparing one model to another. Rather, it requires that the controller be adapted (e.g., programmed) to compare models, but there is no teaching

CONTAINS HIGHLY CONFIDENTIAL INFORMATION

or even suggestion in the specification of what algorithm should be implemented to perform this task.

509. With respect to the further requirement in claim 1 of the ’262 patent—“an output device connected to said computer output and communicating densitometry model comparison information”—there is no disclosure in the written description of how to communicate densitometry model comparison information. Nor is there enablement for how one of skill in the art would communicate such densitometry model comparison information.

510. The ’262 patent is a continuation-in-part application that includes new disclosures relating to the use of an electron beam source. The ’262 patent makes it clear that “electron beam source” does not refer to the electron beam in an x-ray source but rather than the source produces a collimated electron beam and that this electron beam scans the patient. ’262 patent at 6:10–28. As discussed above, the person of skill in the art knew about bone densitometry and imaging with x-ray beams, not with electron beams. The specification of the ’262 patent provides no guidance for how to quantitatively calculate bone density using an electron beam source and therefore does not evidence possession of or enablement for the full scope of “densitometry” as used in claim 1 of the ’262 patent. QCT and densitometry methods in the art at the time of the priority date did not use electron beam sources. There is no explanation in the specification for how one of skill in the art could

CONTAINS HIGHLY CONFIDENTIAL INFORMATION

transform detected electrons into a measurement of bone density on which to build a "three-dimensional digital densitometry model." Further, the person of skill in the art would know that in order to penetrate the patient's anatomy as shown in Fig 4a–d of the '262 patent, the electron beam would have to be very, very energetic and would deliver a huge radiation dose to the patient. Creating, focusing, and steering such an electron beam would require powerful magnets and very significant amounts of electrical power, yet the specification states that such sources could be intra-oral and wireless. The specification also states that the electron beam source could be a "miniaturized, hand-held CRT", but the electron energy in CRTs is so low that the electrons do not come out of the device. Thus, the person of skill in the art would view the specification not only as insufficient to teach use of electron beam sources, but, frankly, would have a hard time taking it seriously.

511. Nor does the specification demonstrate possession of or enable the requirement that "the source is intraoral" as required by claim 3 of the '262 patent (which depends from claim 1). The '262 patent discusses both x-ray and electron beam sources. There is no discussion in the patent specification of how to generate a "three-dimensional digital densitometry model" using an intraoral x-ray beam source, let alone an intraoral electron beam source.

512. It is not surprising that the specification does not convey possession of the claimed invention. As noted above, the inventor repeatedly admitted that he did not

CONTAINS HIGHLY CONFIDENTIAL INFORMATION

and does not have possession of the full scope of the claimed invention. Specifically, Dr. Massie admitted that at the time of his "invention" he had limited knowledge of densitometry and did not know to apply it in a dental application. Massie Tr. at 19:20–21:7; 22:15–25:11. Dr. Massie had a general idea to use densitometry but could not explain how his invention addressed the size of images and the density range necessary for dental diagnostics. Massie Tr. at 25:12–26:11. Dr. Massie also could not explain details regarding what "dual energy" or "beam hardening" meant in densitometry. Massie Tr. at 53:10–19.

513. Further, Dr. Massie could not explain what he meant by tomographical densitometry model or three-dimensional digital densitometry model at the time he filed his patent application or whether there was anything different about storing a pre-existing tomographical dental/orthopedic densitometry model from storing a tomographic image. Massie Tr. at 73:13–74:10; 80:17–22.

514. Dr. Massie also admitted he did not and does not understand how computed tomography works. Massie Tr. at 61:8–62:5, 63:19–25. When questioned about his awareness regarding Hounsfield Units ("HUs"), which are scaled values of detected linear attenuation coefficients during computed tomography, Dr. Massie said "I'm not an engineer so I would defer that to an expert." Massie Tr. at 89:11–14. Dr. Massie further admitted that he was not familiar with digital imaging systems in 1999. Massie Tr. at 62:20–22.

CONTAINS HIGHLY CONFIDENTIAL INFORMATION

515. Further, Dr. Massie also could not answer the question "how does your invention describe looking for those changes" in relation to the required "comparison". Massie Tr. at 71:3–16. Dr. Massie could not point to any discussion in the Patents-in-Suit that explained how to compare differences in changing of bone density. Massie Tr. at 85:22–86:8.

516. In my opinion, for the reasons noted above, the specification does not provide sufficient written description or enable the claimed inventions.

X. Inventorship

517. It is also my opinion that Dr. Massie should not have been the sole listed inventor of the claimed invention(s). It is clear from Dr. Massie's testimony that he does not understand the technology claimed in the Patents-in-Suit. Dr. Massie is the only listed inventor on the Patents-in-Suit but repeatedly stated he could not explain the Patents-in-Suit, including specifically because he was not an engineer or needed to defer to the patent prosecution attorney. Massie Tr. at 25:25–26:11, 36:14–19, 53:16–19, 61:22–62:5, 68:10–69:2, 73:7–74:10, 98:11–14, 152:3–8.

518. Dr. Massie stated in his deposition that the only person who assisted him in research to develop his idea to use densitometry in dental applications between March 1999 and December 1, 1999 when the application was filed was his prosecuting attorney. Massie Tr. at 24:1–20. When asked how his invention addressed a "difference of decalcification," Dr. Massie stated:

CONTAINS HIGHLY CONFIDENTIAL INFORMATION

> I'm –I'm going to pass that back to counsel, my counsel and my prosecuting counsel since they're the ones that – that constructed the claims in the patents themselves.

Massie Tr. at 26:8–11. Dr. Massie similarly responded to a question regarding tomographic models:

> Q. (By Ms. Peschel) So in your patent, what do you mean by tomographic 3D models?
>
> A. I'll ---I will leave that up to my prosecuting counsel. I'm not an attorney. That's – that was his job. That's why I hired him.

Massie Tr. at 36:14–19 (objections removed).

519. With respect to the '301 patent—to which all of the Patents-in-Suit claim priority—Dr. Massie testified:

> Q. (By Ms. Peschel) Dr. Massie, the court reporter has handed you Exhibit D17, which bears the Bates numbers OI014291 through OI014298. Do you see that?
> A. Yes
> Q. What is this document?
> A. This is the -- as referred to, the '301 patent issued April 30th, 2002.
> Q. And when was the application filed for this patent?
> A. I believe it was December of 1990. I'm sorry, 1999.
> Q. Was there anyone else who contributed to the subject matter of this patent?
> A. My patent prosecution counsel. Dr. Leslie may have also.
> Q. Why do you say that?
> A. In the latter part of the application itself.
> Q. (By Ms. Peschel) What do - - you mean by the latter part of the application?
> A. The latter part of the work for the application.
> Q. (By Ms. Peschel) And what would he have contributed?
> A. That, I can't tell you specifically.
> Q. (By Ms. Peschel) What made you say that he may have contributed?

CONTAINS HIGHLY CONFIDENTIAL INFORMATION

A. That the orthopedic reference came into this patent application and the patent issuance, the name of the patent.

Massie Tr. at 71:18–73:6 (objections removed).

520. Dr. Massie further admitted that he had begun to work with Dr. Leslie shortly after his concept in March 1999 and that although the scope of his original idea did not involve orthopedics, it was added before the filing of the original patent application. Massie Tr. at 46:19–47:23.

521. In addition to Dr. Massie's admissions regarding Dr. Leslie's contribution, the patent prosecuting attorney listed Dr. Leslie as an inventor on a summary of Osseo patents, including the '301 patent and the '262 patent. Massie Tr. at 58:5–59:7.

522. Asserted Claims in the Patents-in-Suit requiring "orthopedic" include: claims 1–8 of the '301 patent, and claims 1–4 & 6 of the '262 patent. Based on Dr. Massie's admission that Dr. Leslie contributed to the introduction of "orthopedic" into the claims, it is my opinion that Dr. Leslie is an omitted inventor for the Asserted Claims of the '301 and '262 patents.

523. It is further my opinion that the patent prosecuting attorney, Mark Brown, should further have been listed as an inventor on all Asserted Claims based on Dr. Massie's admission that his patent prosecuting attorney contributed to the claims and was the one who understood a number of the technical terms and concepts that Dr. Massie did not understand.

CONTAINS HIGHLY CONFIDENTIAL INFORMATION

XI. Invalidity Under 35 U.S.C. § 101

524. I understand that Planmeca has made the following specific assertions regarding invalidity under 35 U.S.C. § 101:

- Merely automating functions previously known in the art does not transform ineligible abstract ideas into patent-eligible applications of the idea;
- A new application for old technology is not sufficiently transformative to meet the requirements for 35 U.S.C. § 101;
- Making, creating, and/or storing models of a dental or orthopedic structure is an abstract idea; and
- Comparing models is an abstract idea.

525. Planmeca's assertions are consistent with my understanding of the legal requirements for patent eligibility. It is my opinion that all Asserted Claims are invalid under 35 U.S.C. § 101 as encompassing subject matter not eligible for patenting.

526. My opinion is based on my understanding of what the Supreme Court has excluded from patent eligibility, my knowledge of and experience with the prior art (*e.g.*, see section VII), and the admissions of the listed inventor regarding what his concept was, as well as admissions in the Patents-in-Suit regarding known or conventional features of tomography, densitometry, and imaging systems. *See* Section VI (admissions regarding the prior art).

527. Dr. Massie testified:

> Q. (By Ms. Peschel) Are there any notes you took in March of 1999 regarding your idea?

CONTAINS HIGHLY CONFIDENTIAL INFORMATION

> A. Notes with Dr. Christensen?
> Q. Any notes with respect to your idea that you came up with in March of 1999.
> A. I generated a letter to myself in regards to my thoughts and wanting to pursue this and the concept of maybe this will work.
> Q. Okay. And what was your specific concept at that time?
>
> A. My concept was to find the correlation between what was used in medicine at the time to diagnose decalcification of bone and bring it into the dental field for the sake of decalcification of teeth and bone in the oral and maxillofacial complex of a dentist's care and the patient's needs.

Massie Tr. at 22:7–23 (objection removed); *see also* OI016983 (Massie letter to himself concerning his concept).

528. Indeed, Dr. Massie repeatedly testified that his concept was to bring densitometry methods from medicine into the dental field. The only differences Dr. Massie pointed out between how such methods would apply differently in the medical field as compared to the dental field were the size of the images and that teeth are more dense than bone. Massie Tr. at 25:3–26:5. However, Dr. Massie could not explain how his invention addressed those differences.

529. As I stated above, densitometry was already in use in the dental field. In my opinion, the Asserted Claims do not transform the basic concept of applying densitometry methods from medicine to the dental field to make, create, or store models of a dental structure into a useful application of the idea that would meet the patent eligibility requirements of § 101. As described throughout this report, there

CONTAINS HIGHLY CONFIDENTIAL INFORMATION

are no new limitations added in the Asserted Claims. Nor are there any limitations or specific solutions that address the alleged technical problems of the dental field, such as the size of images in dental applications and/or different densities of teeth.

530. Indeed, beyond a mere knowledge that densitometry methods used in the medical field measure bone density, Dr. Massie had no understanding of the technology involved with densitometry. Massie Tr. at 20:20–21:7, 22:15–23:7, 53:10–19 (can't answer regarding dual energy technology), 25:3–26:11, 66:16–67:17, 73:13–74:10, 79:15–18, 80:17–22, 85:22–86:8, 140:24–141:2, 152:3–8; *see also* Aug. 27, 2018 Claim Construction Hearing Tr. at 7:13–15 (Massie did not invent densitometry).

531. Nor did Dr. Massie have an understanding of how computed tomography works beyond a basic level or an understanding of the equipment involved. Massie Tr. at 36:20–37:15, 61:8–62:5, 73:13–74:10, 85:1–6, 86:21–23 (no understanding of the Webber patent incorporated by reference into the Patents-in-Suit as an example of tomography methods), 98:11–14 (no understanding of Hounsfield units); *see also* Aug. 27, 2018 Claim Construction Hearing Tr. at 7:13–15 (Massie did not invent tomographic scanning). Nor did Dr. Massie have an understanding of digital imaging systems at the time he filed his patent application. Massie Tr. at 62:20–22. As discussed below, this indicates that Dr. Massie was not a true inventor of the Asserted Claims; however, even assuming for the sake of argument that Dr. Massie

CONTAINS HIGHLY CONFIDENTIAL INFORMATION

is the inventor, his lack of knowledge regarding these aspects of the claims indicates that these aspects were not the point of novelty that he came up with. In other words, he was relying on what had been done in the art with respect to densitometry, tomography, and digital imaging to implement his alleged inventive concept.

532. I also understand that Osseo may argue that the "comparing" limitations constitute the novelty of the invention. *See* Aug. 27, 2018 Claim Construction Hearing Tr. at 7:15–24 (asserting that comparison of models was what was recognized as inventive by the Patent Office). That, too, encompasses an abstract idea—an old idea. As acknowledged by Dr. Massie, the concept of comparing a prior and current images to assist with diagnosis of dental conditions was routine for dentists well before the Patents-in-Suit were filed. Massie Tr. at 68:16–21. Dr. Massie admitted in deposition that he could not explain how his alleged invention describes looking for changes in connection with the "comparing" requirement. Massie Tr. at 71:3–16. Other than computerizing the method of comparing, I do not find any new application of that idea in the Asserted Claims that would transform the abstract idea of comparing from a patent-ineligible concept to patent-eligible subject matter. In addition, the Patents-in-Suit do not describe how this computerized comparison is done. If this aspect does not need to be described because the person of ordinary skill in the art would know how to do it, then this, too, cannot be a source of novelty.

CONTAINS HIGHLY CONFIDENTIAL INFORMATION

XII. Ensnarement

533. I understand that ensnarement is a legal limitation that bars a patentee from asserting the Doctrine of Equivalents to encompass, or "ensnare," the prior art.

534. I understand that Osseo has attempted to allege infringement under the Doctrine of Equivalents by stating that "the Planmeca Promax 3D family of imaging systems along with the Romexis software ***infringe either literally or under the doctrine of equivalents***, at least these claims of the Patents-at-Issue under 35 U.S.C. § 271(a)-(c)." Osseo's Final Invalidity Contentions (attached as **Exhibit 10**) at 1 (emphasis added).

535. Osseo also argued:

> With respect to any claim limitation that may be found not to be literally infringed, Osseo contends in the alternative that any asserted claim that the Accused Products are not found to infringe literally is nevertheless embodied by the Accused Products ***under the doctrine of equivalents ("DOE") under an operative doctrine of equivalents test, e.g., function-way-result or insubstantial differences***. Osseo reserves the right to assert infringement under the DOE to the extent discovery from the Defendant provides further details as to the structure, function and operation of the Accused Instrumentalities.

Osseo's Final Invalidity Contentions (attached as **Exhibit 10**) at 2–3 (emphasis added).

536. I have reviewed Osseo's Final Infringement Contentions and have not found any allegations specifying what, if any, equivalents Osseo is actually attempting to assert.

CONTAINS HIGHLY CONFIDENTIAL INFORMATION

537. I have been informed that Osseo's equivalency allegations are deficient for failing to identify which claim elements are met by specific structures and/or functions.

538. However, Osseo's Infringement Contentions fail to disclose any element or feature of the accused devices that literally meets the Court's constructions of the "densitometry" and/or "tomographic modeling" terms. Therefore, I have been asked to analyze and address the application of the Doctrine of Equivalents to the "densitometry" and "tomographic modeling" limitations of the Asserted Claims.

539. It is my opinion that any such attempt by Osseo would necessarily, and impermissibly, ensnare the admitted prior art thereby invalidating the Asserted Claims of the Patents-in-Suit.

540. Given Osseo has not properly asserted infringement under the Doctrine of Equivalents, I expressly reserve to right to amend my report to address any future allegations the Court may allow Osseo to assert, including the right to specifically address any hypothetical claim encompassing alleged equivalents that is later fashioned.

A. "Densitometry" and "Tomographic Modeling" Claim Constructions

541. I understand the Court has construed the term "densitometry" to mean "quantitatively calculated bone density." D.I. 45 at 2.

CONTAINS HIGHLY CONFIDENTIAL INFORMATION

542. I also understand the term "densitometry" impacts all of the Asserted Claims because it appears in each of the Asserted Claims of the '301 and '262 patents literally or by dependency upon an independent claim) and that the Court limited all of the "tomographic modeling" terms to "tomographic densitometry modeling," thereby requiring "densitometry" be an element for all of the Asserted Claims of the '374 patent. *See* D.I. 44 at 6 (stating "[t]he Court agrees with Defendant: tomographical modeling is limited to densitometry").

543. I have reviewed Osseo's Final Infringement Contentions and understand that Osseo's position is that grey-scale representations as used by the accused products meet the "densitometry" requirement of the Asserted Claims. For example, Osseo alleges:

> Specifically, the Promax 3D family of imaging systems merge multiple tomographic scans (CBCT images and/or 3D volumes) of an object to produce a representation of the object (3D volume, SmartPan file, and/or stitched 3D volume) that depicts quantitative density differences of the structure of the object (***density differences depicted as pixels at different levels of gray and/or color***) created by the controller/microprocessor using densitometry (quantitatively calculated bone density – ***the gray/color pixel values are calculated and are indicative of bone density***) from at least one focal plane.

See Osseo's Final Infringement Contentions, Ex. A (attached as **Exhibit 11**) at 2 (emphasis added); *see also id.* at 2 (stating "Romexis Tech Manual at PLANMECA0001314–16 (Image processing of raw data, including contrast

CONTAINS HIGHLY CONFIDENTIAL INFORMATION

determinations and enhancements); PLANMECA0001460 (***gray scale images***).") (emphasis added).

544. I also understand that Court has specifically excluded such grey-scale representations as meeting the "densitometry" term in the Asserted Claims:

> Because the specifications unambiguously base all outputs on numerical measurements and calculations, ***Plaintiffs effort to expand the claim to include an "analog" output and grey-scale representations (Tr. at 50-54) is unavailing***.

D.I. 44 at 6–7 (emphasis added).

545. Despite the Court's clear rulings discussed above, Osseo continues to contend that Planmeca performs "densitometry" based on the use of the very grey-scale representations that the Court has expressly excluded as being outside the scope of "densitometry."

546. In other words, Osseo's Infringement Contentions seek to show the presence of the "densitometry" limitation in the accused products based on qualitative contrast determinations constructed from gray-scale pixel values instead of "quantitatively calculated bone density" despite the Court's construction to the contrary.

547. It is my opinion that allowing Osseo to assert the Doctrine of Equivalents to encompass qualitative contrast determinations based on gray-scale pixel values would vitiate the Court's constructions of the "densitometry" and "tomographic modeling" terms.

B. Capture of Admitted Prior Art

548. It is my understanding that the principle of ensnarement prevents a patentee from asserting the Doctrine of Equivalents to capture the prior art.

549. Here, the patentee, and the only listed inventor (Dr. Massie), has admitted qualitative "densitometry" was well-known prior to his alleged conception of the invention claimed in the Patents-in-Suit.

550. For example, Dr. Massie admitted during his deposition testimony that:

- Densitometry existed prior to his conception of the invention of the asserted patents and had been used at least for detecting the density and breakdown of bone in the medical field (Massie Tr. at 20:22–21:7; 22:15–23, 66:16–67:6); and
- Tomography methods and computerized tomographic scans were known, including those that created 3D models when he filed his 1999 patent application (Massie Tr. at 36:20–37:15).

551. Furthermore, Osseo's counsel admitted during the Markman hearing that "Dr. Massie did not invent tomographic scanning. He did not invent densitometry. Those were preexisting technologies." August 27, 2018 Hearing Tr. at 7:13–15.

552. Moreover, the Background of the Invention section of the Patents-in-Suit discusses the prior art technical concepts of tomography and densitometry, specifically admitting that:

- Tomography or sectional radiography techniques using scanning X-ray beams have previously been employed for dental applications. ('301 patent at 1:61–63); and
- In the medical field, densitometry procedures are used for measuring bone morphology density (BMD) by utilizing

CONTAINS HIGHLY CONFIDENTIAL INFORMATION

> scanning X-ray beam techniques. Examples are shown in U.S. Pat. No. 5,533,080; U.S. Pat. No. 5,838,765; and U.S. Pat. No. Re. 36,162, which are incorporated herein by reference. Medical applications of densitometry include the diagnosis and treatment of such bone diseases as osteoporosis. (301 patent at 2:1–7).

553. In addition, as I made clear above, not only was quantitative densitometry used in the medical field, it was also used in the dental field before the priority date of the Patents-in-Suit.

C. Assertion of the Doctrine of Equivalents Would Ensnare the Admitted Prior Art

554. It is my opinion that an assertion of the Doctrine of Equivalents by Osseo to encompass qualitative contrast determinations based on gray-scale pixel values as meeting the "densitometry" and/or "tomographic modeling" terms of the Patents-in-Suit would not only vitiate the Court's constructions of these terms, but would also impermissibly ensnare the admitted prior art.

555. In other words, expansion of the scope of the "densitometry" and "tomographic modeling" terms to include the mere use of prior art grey-scale representations would render the Asserted Claims of the Patents-in-Suit invalid.

XIII. Trial Exhibits

556. I reserve the right to use demonstrative exhibits at trial to aid the jury's understanding of the bases for my opinions. These demonstrative exhibits may include charts, diagrams, videos, animated or computer-generated graphics, as well

CONTAINS HIGHLY CONFIDENTIAL INFORMATION

as excerpts from claim charts, patent drawings, specifications, file histories, discovery responses, deposition testimony and deposition exhibits.

557. These demonstrative exhibits have not yet been prepared, but will be completed in compliance with the Court's scheduling orders.

XIV. Supplementation

558. I reserve the right to revise or supplement my opinions based on any additional discovery, data, or changes to claim constructions provided after the date of this report. I further reserve the right pursuant to the Court's procedures to respond in reply to any report of an Osseo expert that addresses my opinions herein. I am further prepared to testify and express my opinions on related matters to address issues raised at trial.

XV. Conclusion

559. As expressed in greater detail above, I hold the following opinions:

- The Asserted Claims are invalid as obvious in light of prior art;
- The Asserted Claims are invalid for lack of written description;
- The Asserted Claims are invalid for lack of enablement;
- The Asserted Claims are invalid for lack of patentable subject matter; and
- Mark Brown should have been listed as an inventor on each of the Patents-in-Suit, and Christopher Leslie should have been listed as an inventor on the '262 and '301 patents.

Dated: May 30, 2019

Norbert Pelc

Norbert Pelc

CONTAINS HIGHLY CONFIDENTIAL INFORMATION