US 20070088357A1

(19) United States

(12) Patent Application Publication

Johnson et al.

(10) Pub. No.: US 2007/0088357 A1

(43) Pub. Date: Apr. 19, 2007

(54) ADJUSTABLE BONE ANCHOR ASSEMBLY

(75) Inventors: **Chris E. Johnson**, Germantown, TN (US); **Heather Lindenman**, Germantown, TN (US); **Rodney R. Ballard**, Arlington, TN (US); **John R. Dimar**, Louisville, KY (US)

Correspondence Address:
WOODARD, EMHARDT, MORIARTY, MCNETT & HENRY LLP
111 MONUMENT CIRCLE
SUITE 3700
INDIANAPOLIS, IN 46204-5137 (US)

(73) Assignee: **SDGI Holdings, Inc.**

(21) Appl. No.: **11/253,046**

(22) Filed: **Oct. 18, 2005**

Publication Classification

(51) **Int. Cl.**
A61F 2/30 (2006.01)
A61B 17/58 (2006.01)

(52) **U.S. Cl.** **606/61**; 606/73

(57) **ABSTRACT**

A medical implant device has in one embodiment a receiver member for receiving an elongated member, a crown member, an anchor member and a retaining member. An embodiment of the receiver member has an axial opening, a transverse channel, a chamber including at least one substantially flat wall, and a groove. An embodiment of the crown member has at least one substantially flat side. An embodiment of the anchor member has a head with at least one substantially flat surface that may be parallel to the anchor member's longitudinal axis, and an anchoring portion. An embodiment of the retaining member is a substantially flat clip. The crown member and anchor member are inserted into the chamber, and the retaining member is inserted into the groove beneath them. The anchor member may be pivoted substantially in one plane with respect to the receiver member until locked.

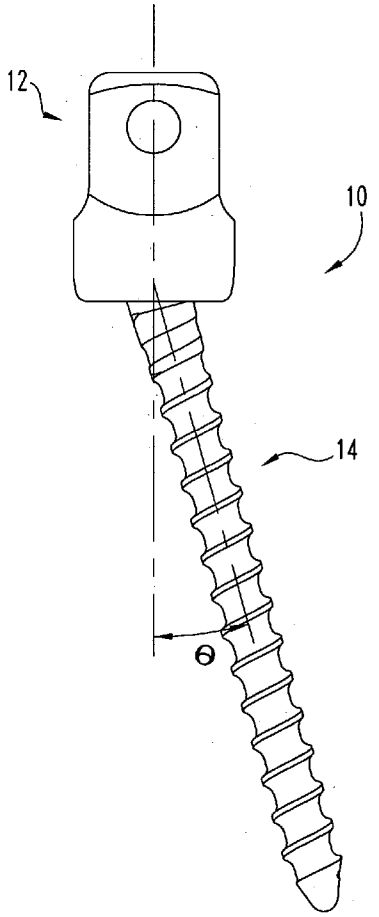

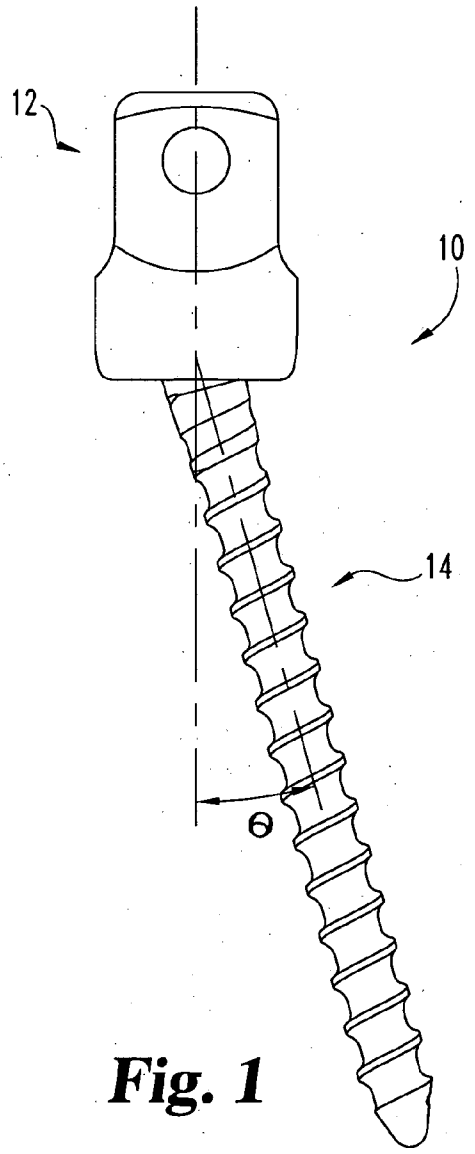

Fig. 1

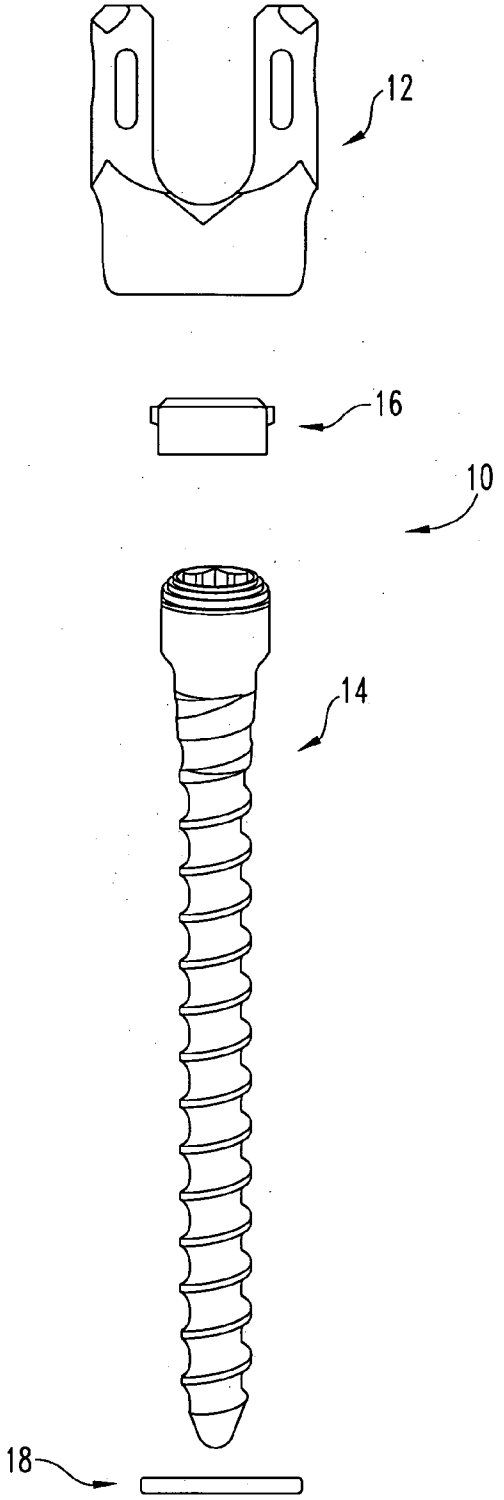

Fig. 2

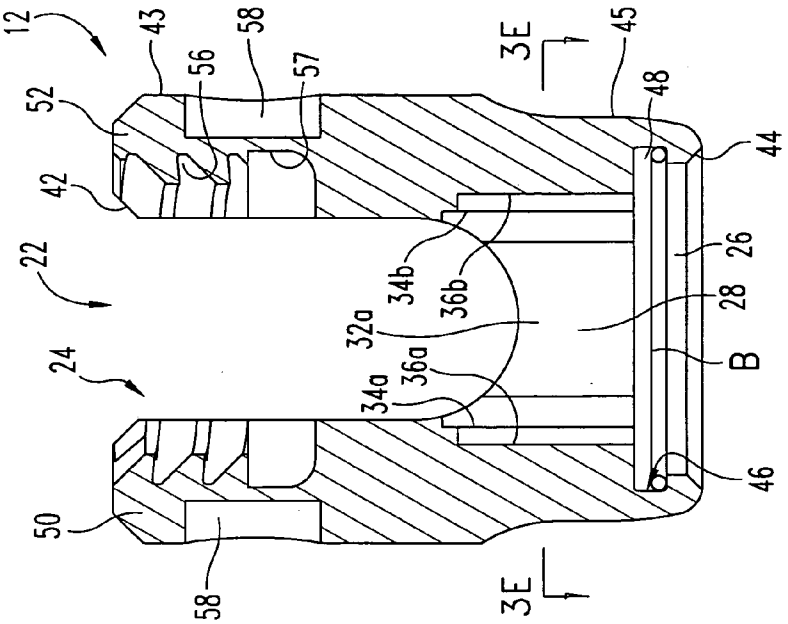

Fig. 3C

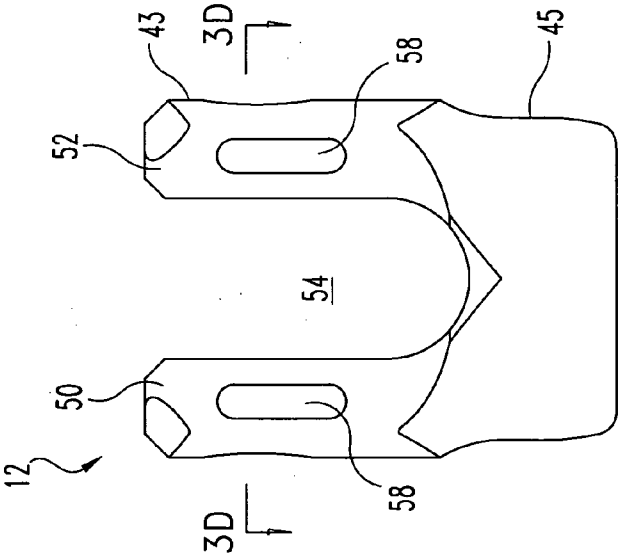

Fig. 3B

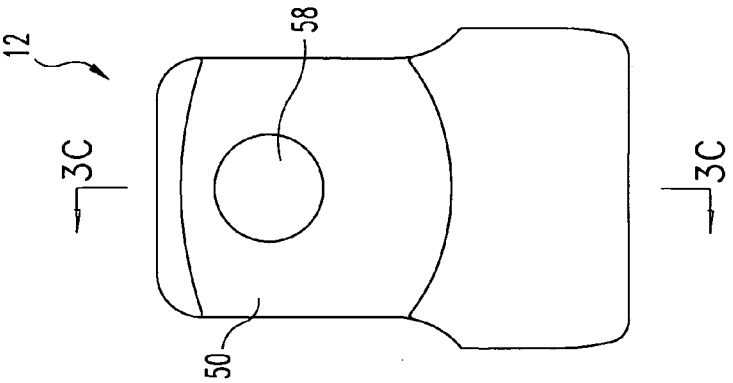

Fig. 3A

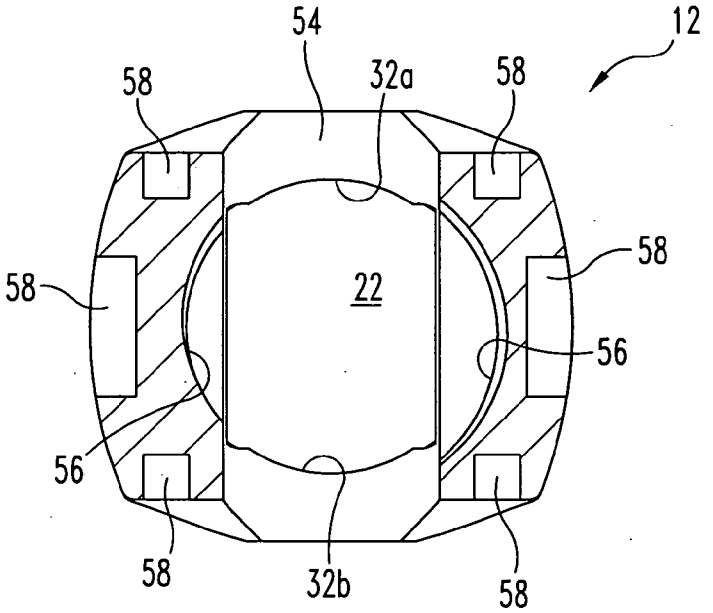
54
12
58
32a
58
58
58
22
56
56
58
32b
58

Fig. 3D

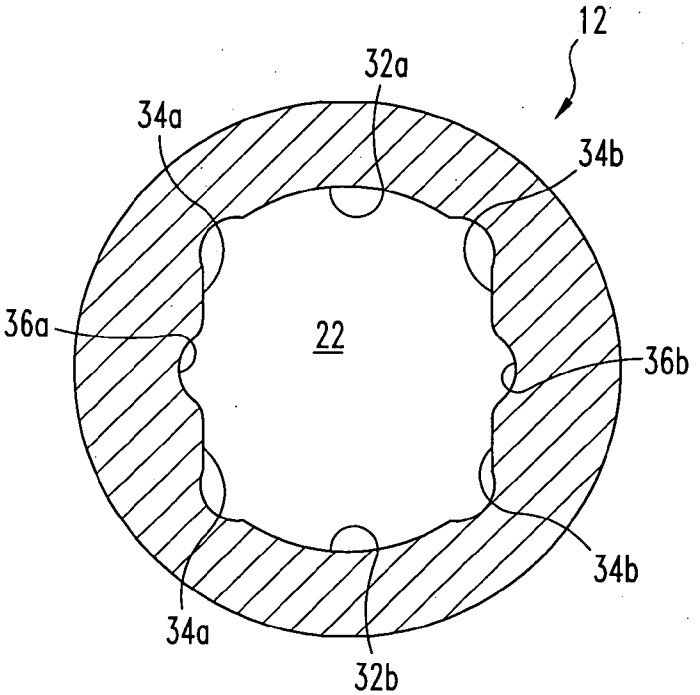
12
32a
34a
34b
36a
22
36b
34b
34a
32b

Fig. 3E

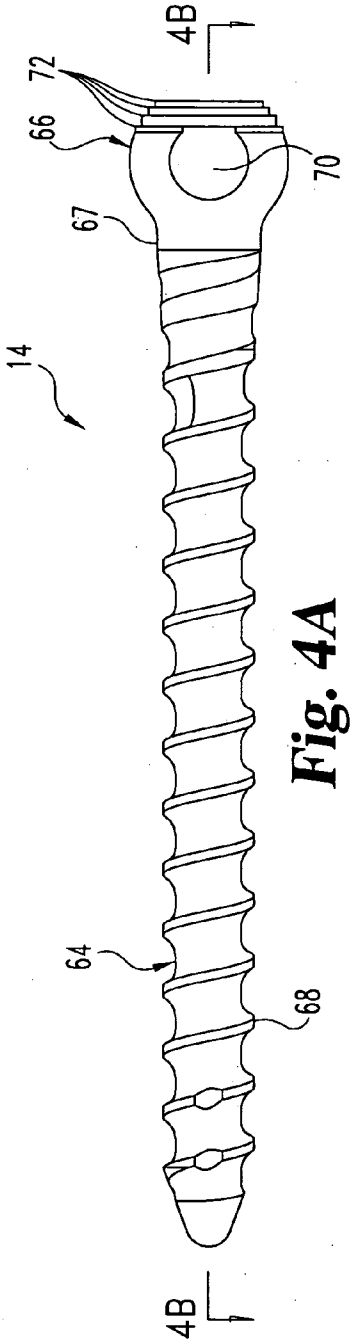

Fig. 4A

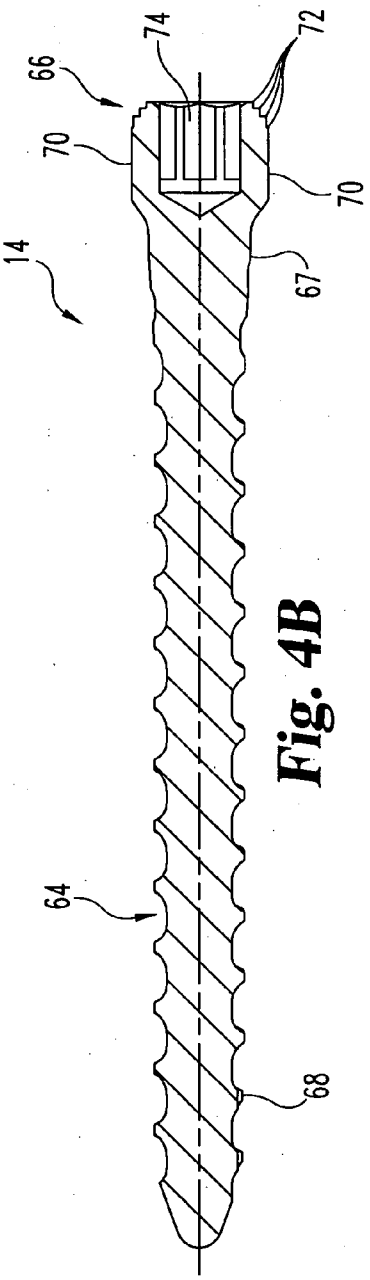

Fig. 4B

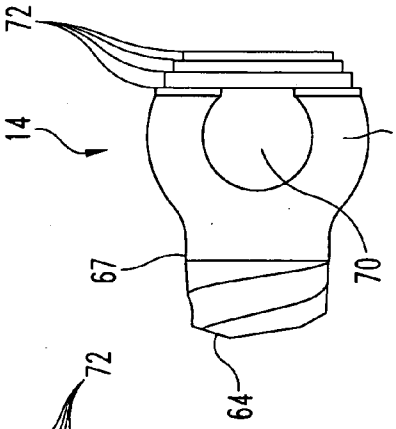

Fig. 4C

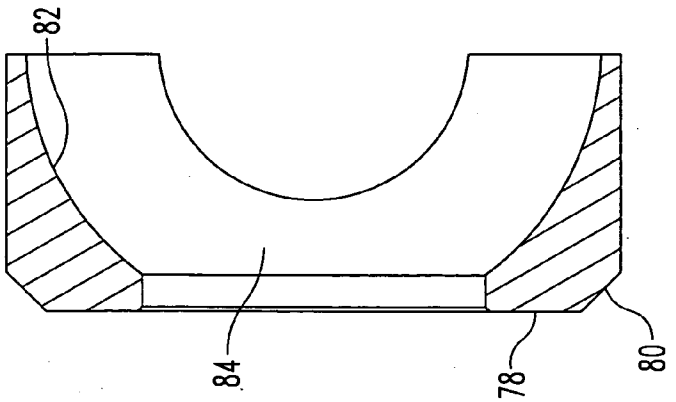

Fig. 5B

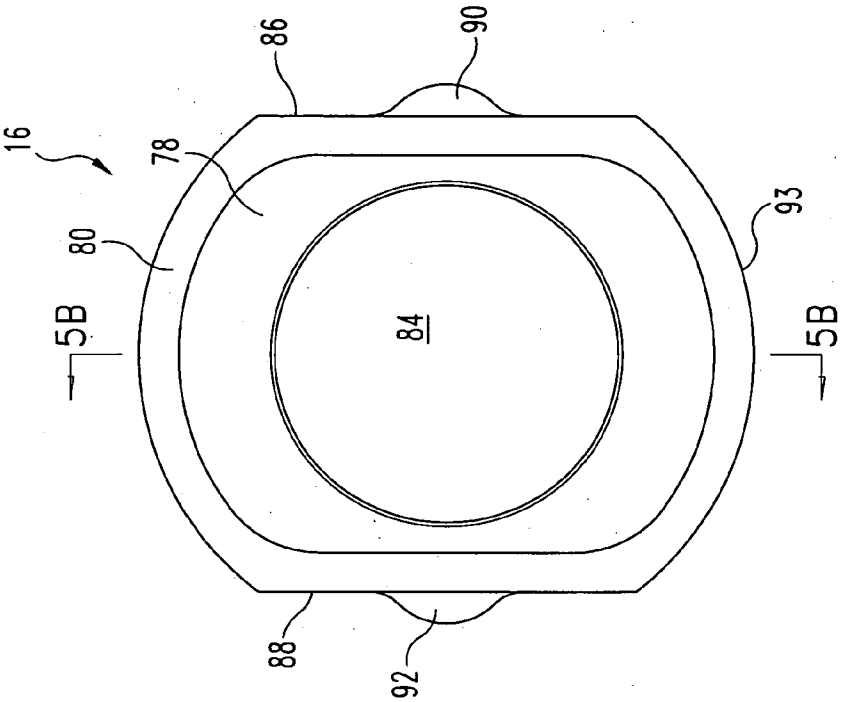

Fig. 5A

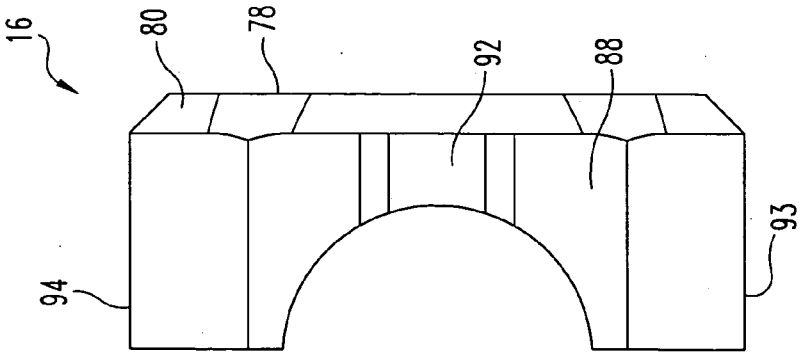

Fig. 5C

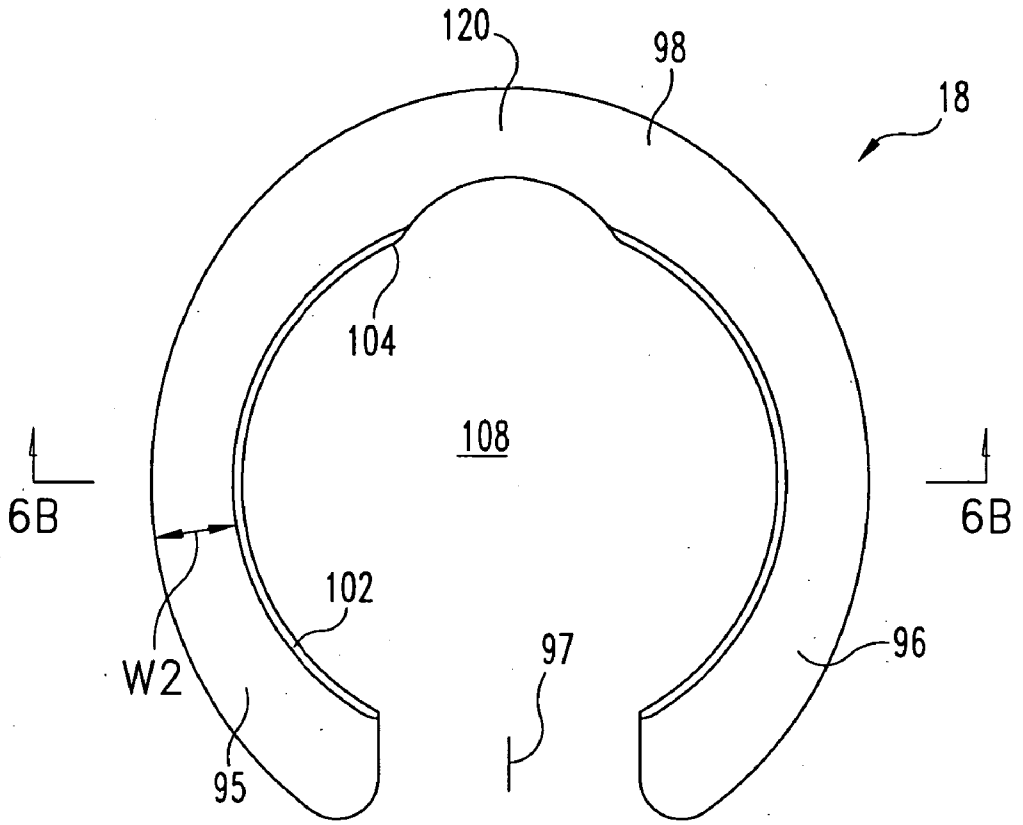
120
98
18
104
108
6B
6B
102
W2
97
96
95

Fig. 6A

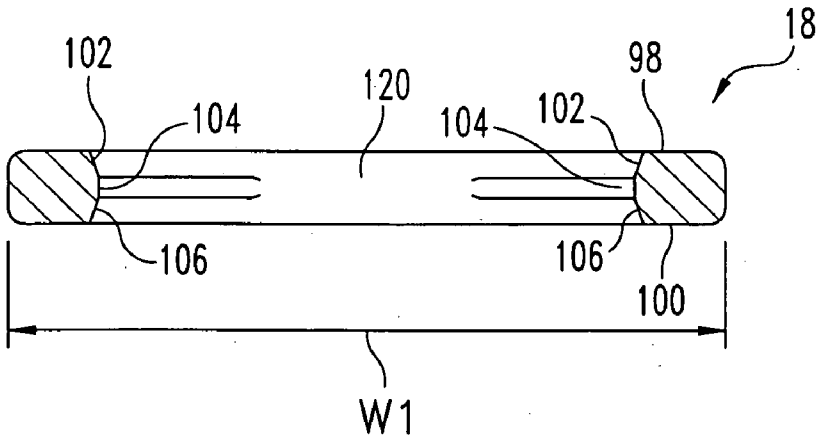
18
102
98
120
104
104
102
106
106
100
W1

Fig. 6B

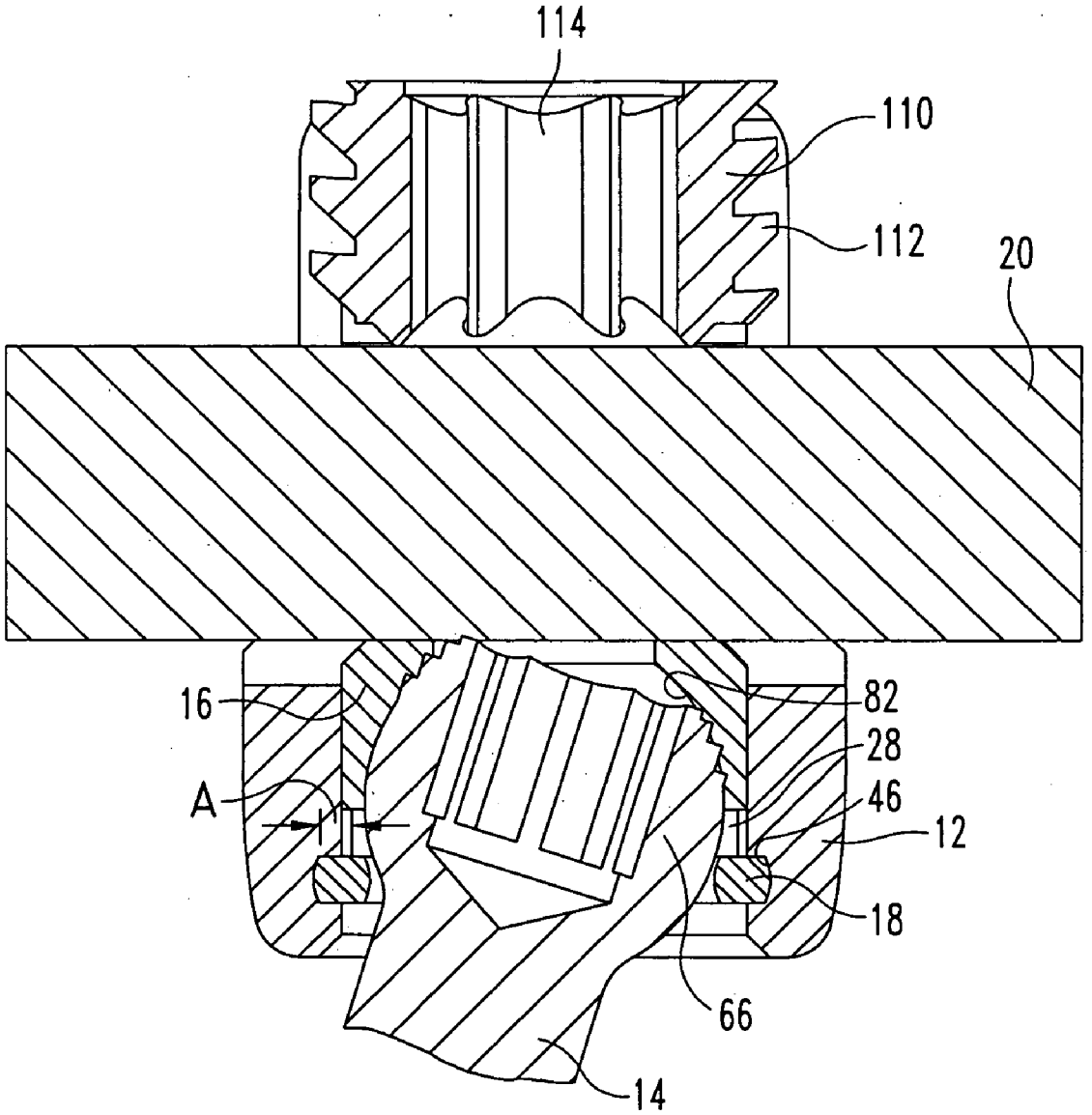

Fig. 7

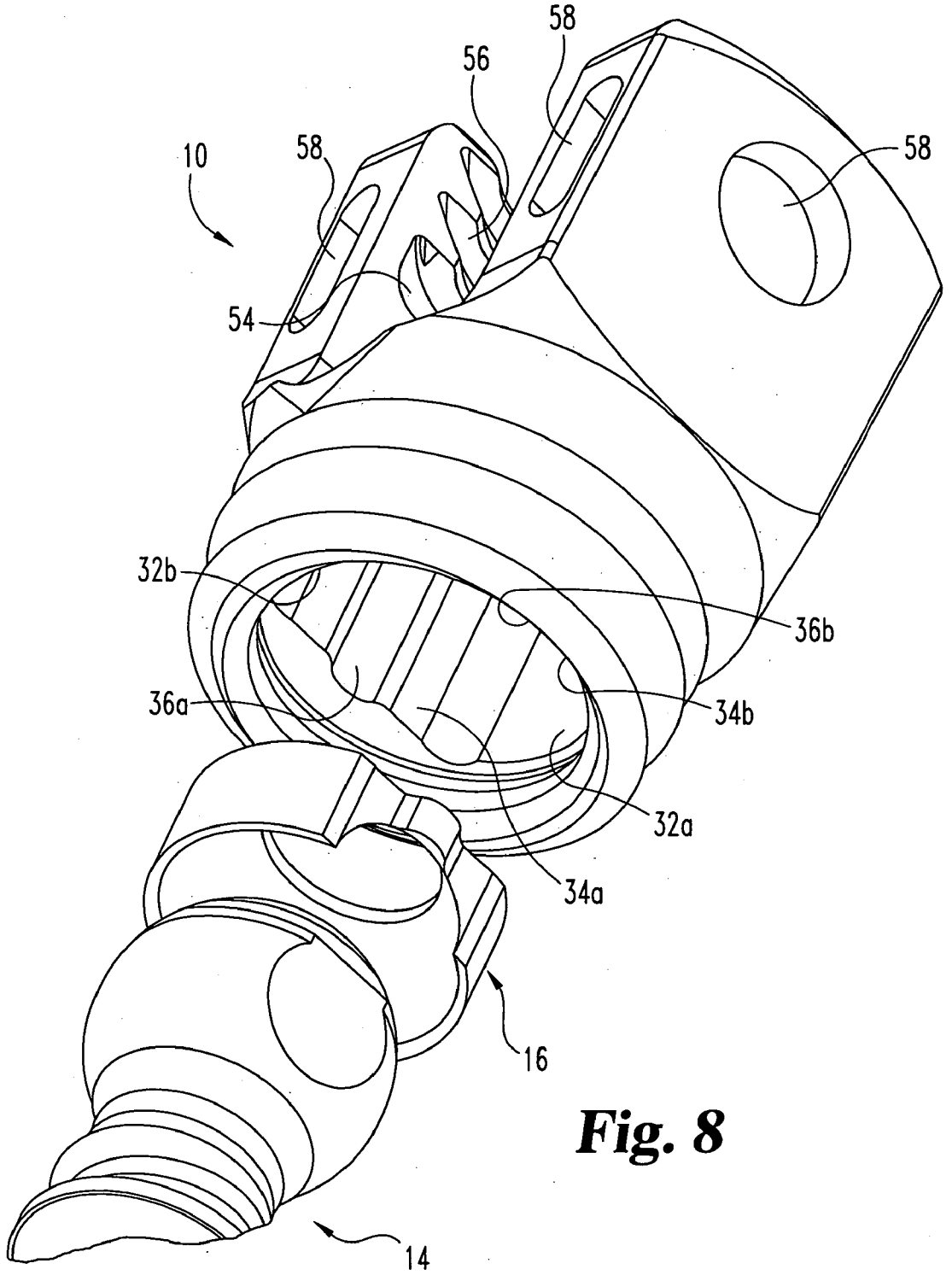

Fig. 8

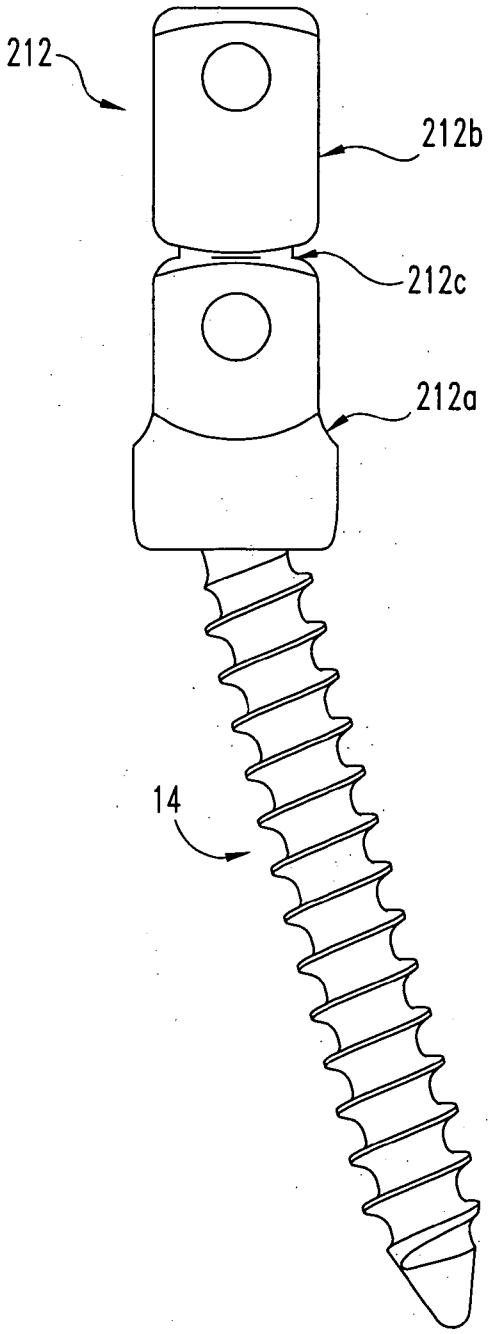

Fig. 9

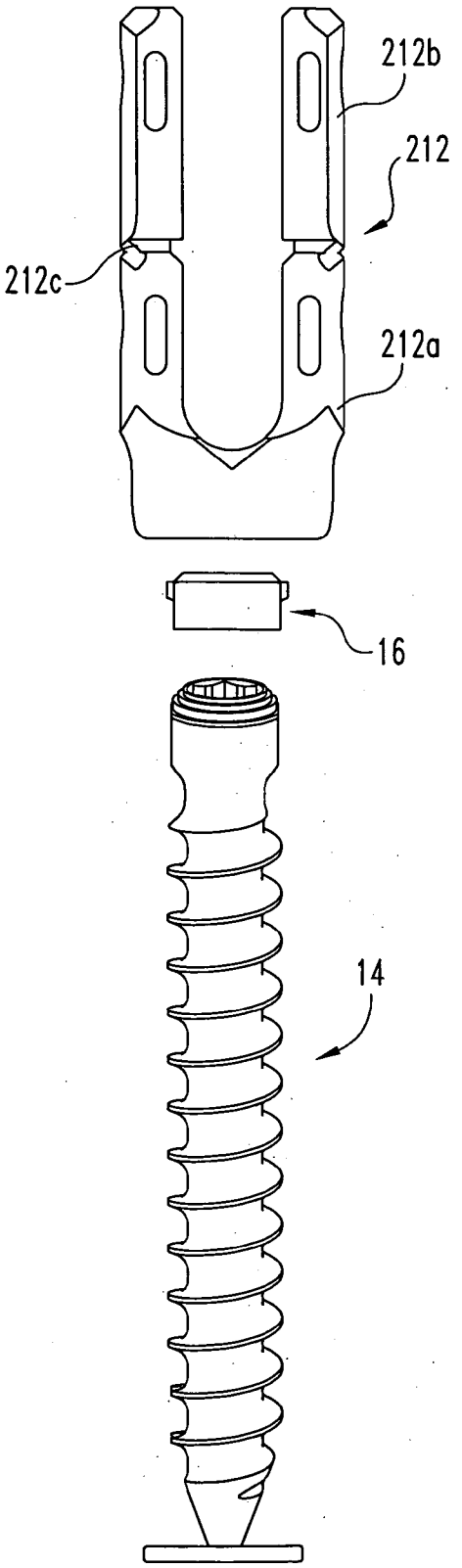

Fig. 10

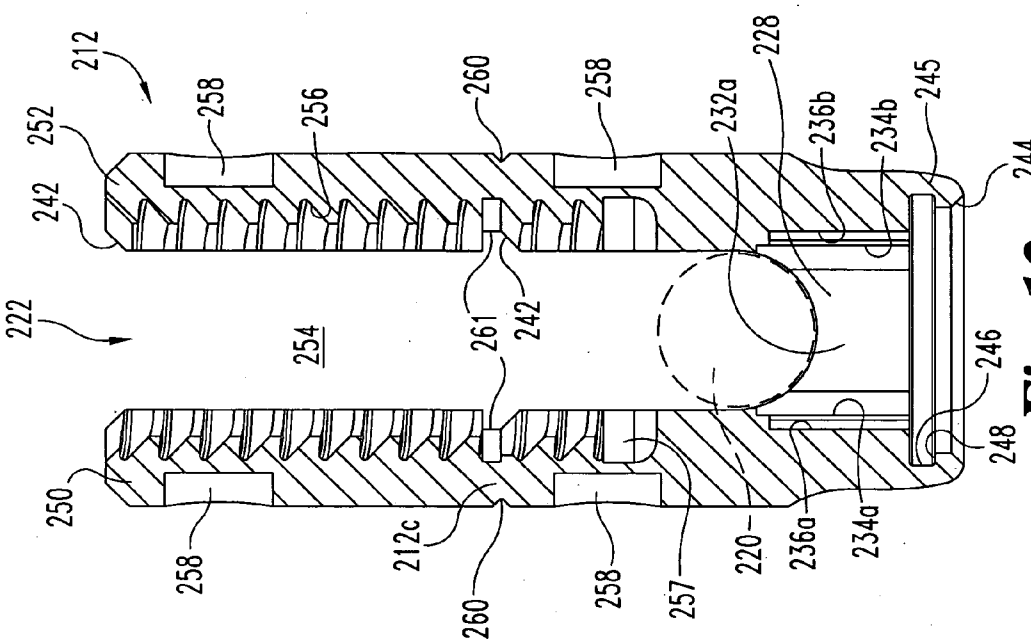
212
252
242
258
256
260
258
232a
228
236b
234b
245
244
222
254
261
242
246
248
250
258
212c
260
258
257
220
236a
234a

Fig. 12

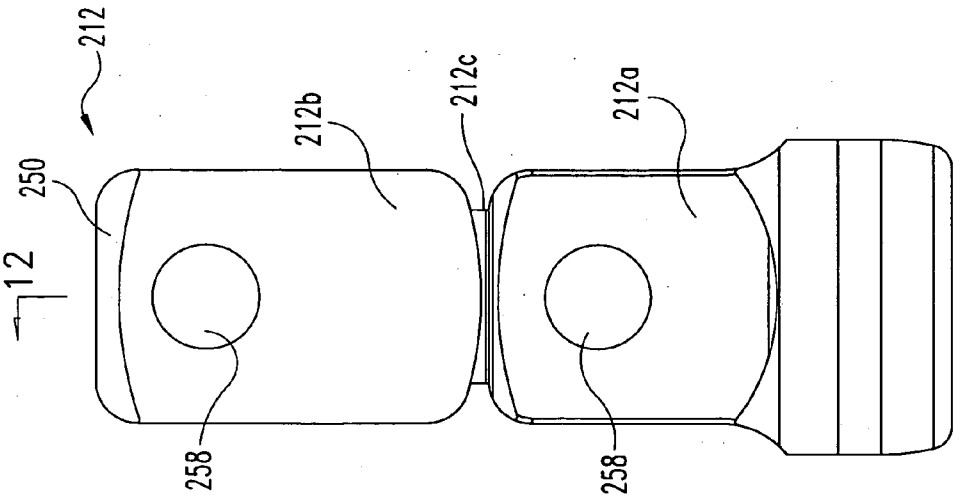
212
250
12
212b
212c
212a
258
258
12

Fig. 11

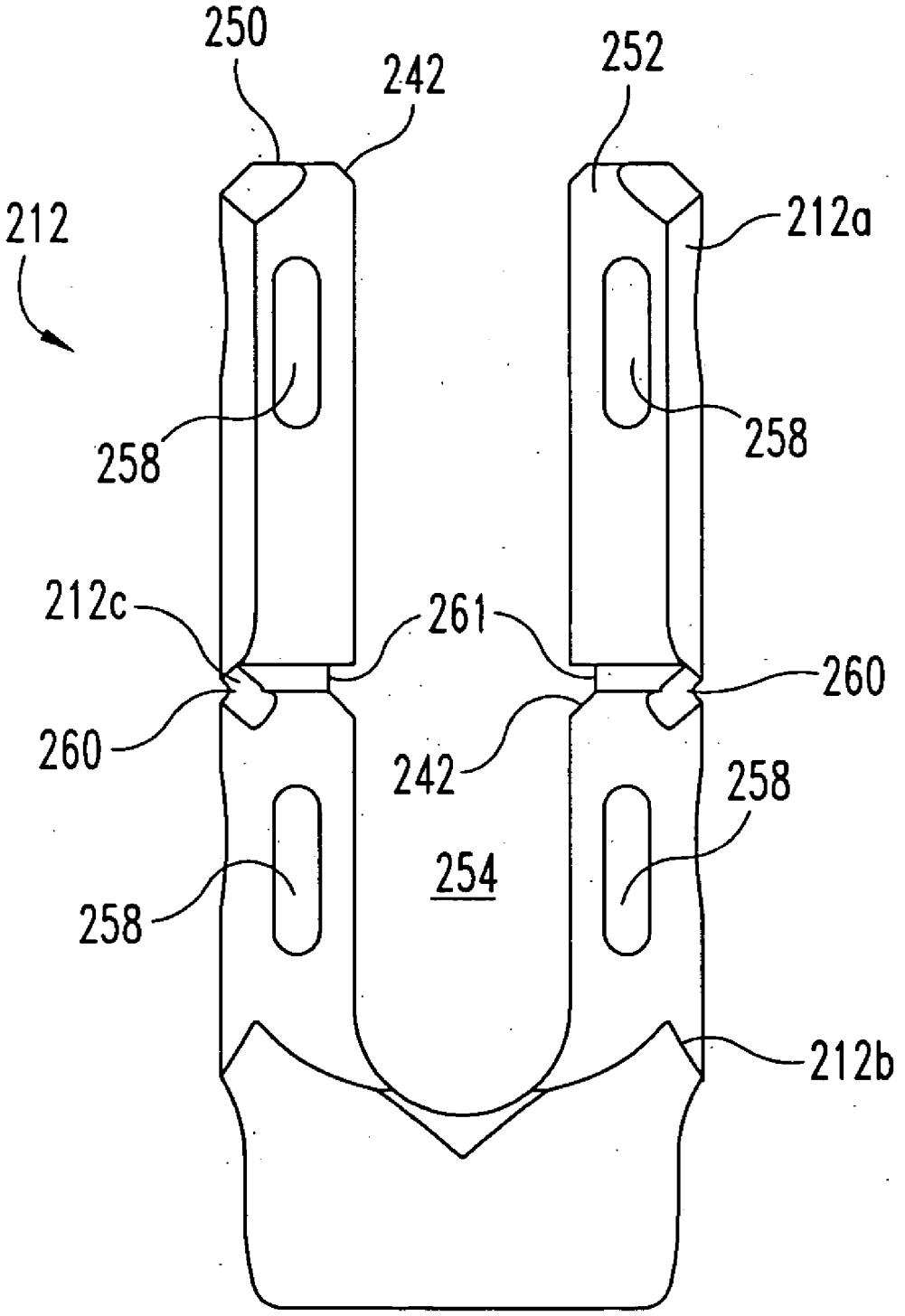
250
242
252
212
212a
258
258
212c
261
260
260
242
258
254
258
212b

Fig. 13

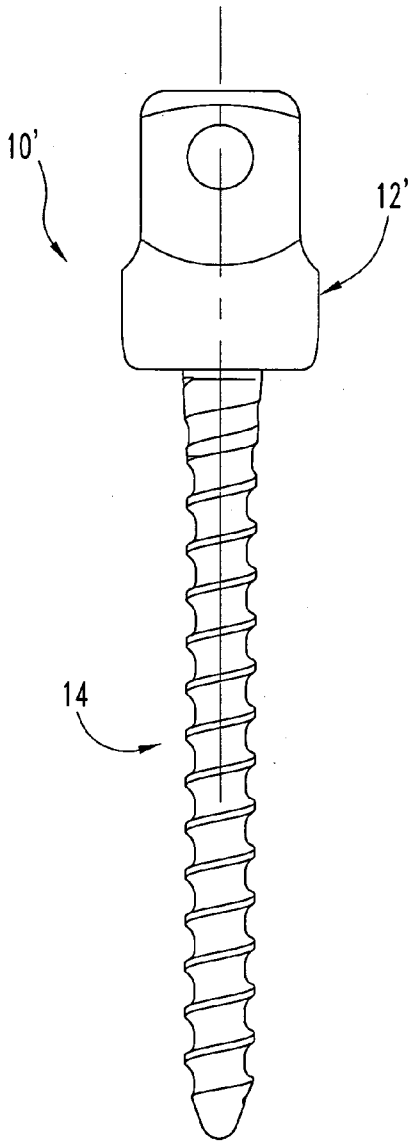

Fig. 14

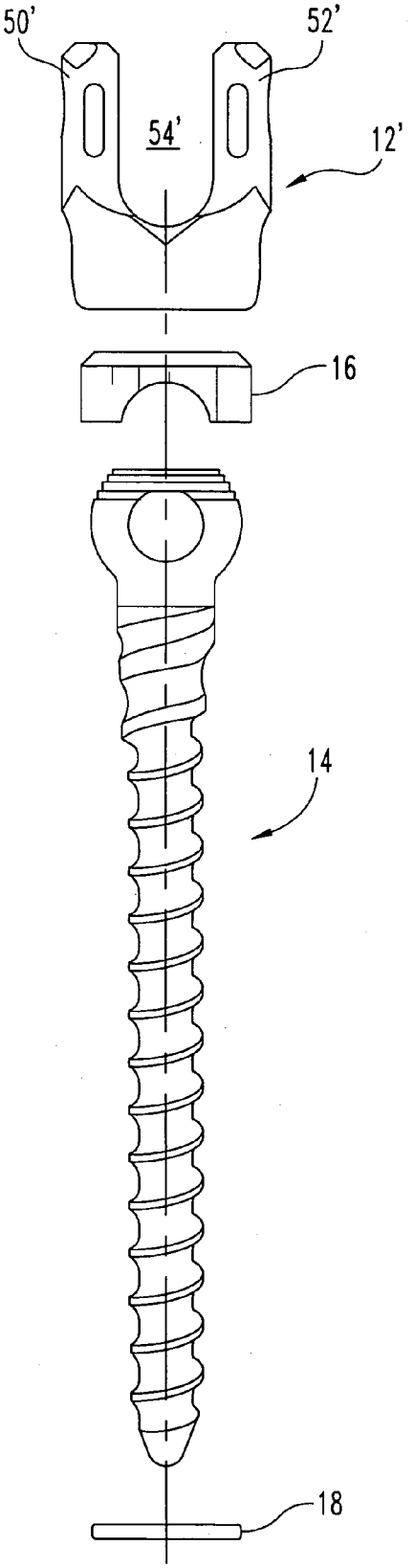

Fig. 15

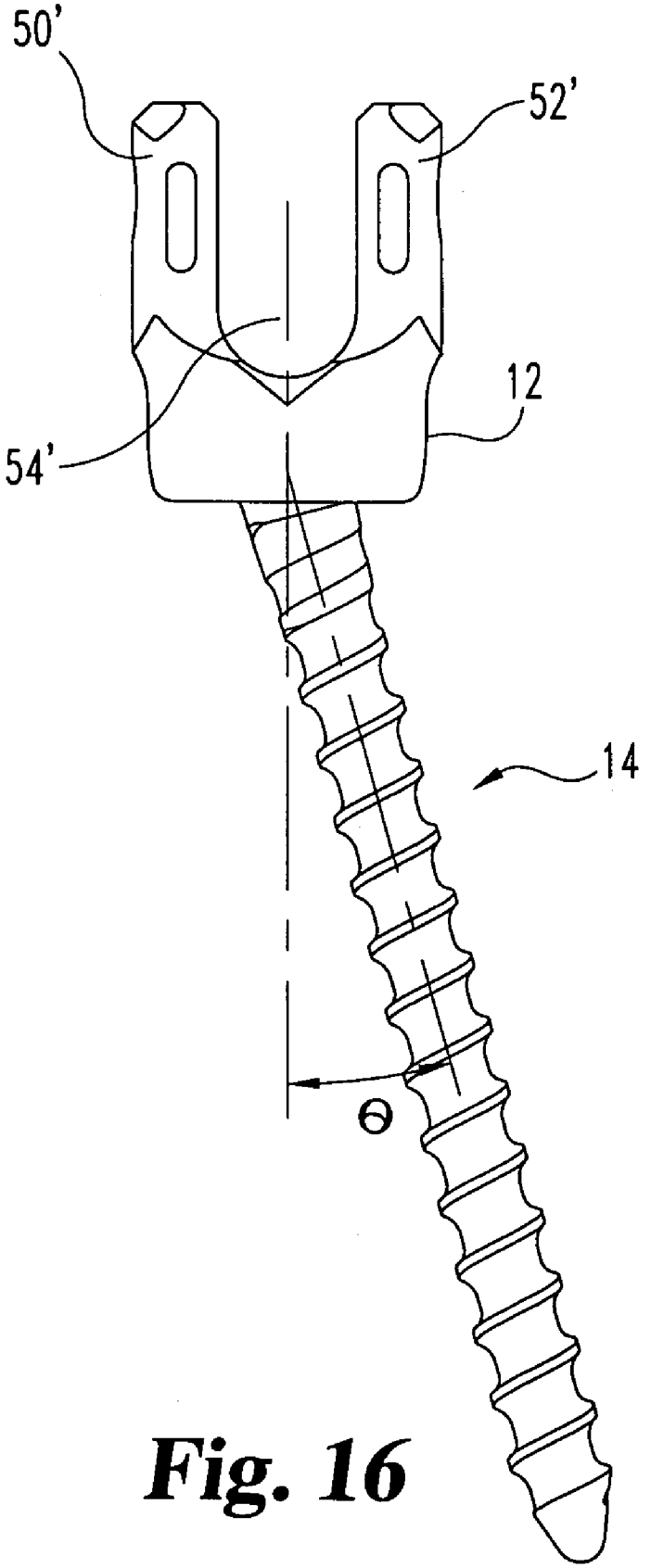

Fig. 16

ADJUSTABLE BONE ANCHOR ASSEMBLY

[0001] The present disclosure relates to devices and methods useful in surgery, such as orthopedic surgery. In particular, it relates to anchors and other implants for use in tissue, to be placed during orthopedic surgery.

[0002] In the field of orthopedic surgery, techniques and systems have been developed for correcting and stabilizing damage or malformation of bones, such as the vertebrae of the spine. In one type of system, an elongated member such as a bendable rod is disposed longitudinally along vertebrae or one or more vertebral segments. The rod may be bent to correspond to or approximate the normal curvature of the spine in the particular region being instrumented. For example, the rod can be bent or otherwise formed into at least an approximation of a normal kyphotic curvature for the thoracic region of the spine, or a lordotic curvature for the lumbar region.

[0003] In such systems, an elongated member can be engaged to vertebrae along a length of the spinal column by way of a number of fixation elements. A variety of fixation elements can be provided which are configured to engage bones or bony tissue, such as specific portions of a vertebra or other bones. For instance, one such fixation element is a hook that is configured to engage a lamina of a vertebra. Another fixation element is a screw that can be threaded into various parts of the vertebra or other bones.

[0004] Such procedures may be used to correct or treat a variety of deformities, injuries or other problems in bony structures such as vertebrae or other tissue. In one example of a spinal procedure utilizing a bendable rod, one or more rods are situated to one or both sides of the spine or spinous processes. Bone screws are threaded into several vertebral bodies, e.g. into the vertebral pedicles. The rods are affixed to the bone screws to apply corrective and/or stabilizing forces to the spine.

BRIEF DESCRIPTION OF THE DRAWINGS

[0005] FIG. **1** is a side elevational view of an embodiment of an adjustable bone anchor assembly.

[0006] FIG. **2** is an exploded view of the embodiment depicted in FIG. **1**.

[0007] FIG. **3**A is a side elevational view of an embodiment of a receiver member shown in FIG. **2**.

[0008] FIG. **3**B is a front elevational view of the embodiment of a receiver member shown in FIG. **3**A.

[0009] FIG. **3**C is a sectional view, taken along the lines **3**C-**3**C in FIG. **3**A, and viewed in the direction of the arrows, of the embodiment of a receiver member shown in FIG. **3**A.

[0010] FIG. **3**D is a sectional view, taken along the lines **3**D-**3**D of FIG. **3**B and viewed in the direction of the arrows, of the embodiment of a receiver member shown in FIG. **3**B.

[0011] FIG. **3**E is a sectional view, taken along the lines **3**E-**3**E of FIG. **3**C and viewed in the direction of the arrows, of the embodiment of a receiver member shown in FIG. **3**C.

[0012] FIG. **4**A is a side elevational view of an embodiment of a bone anchor in the embodiment shown in FIG. **2**.

[0013] FIG. **4**B is a sectional view, taken along the lines **4**B-**4**B of FIG. **4**A and viewed in the direction of the arrows, of an embodiment of a bone anchor shown in FIG. **4**A.

[0014] FIG. **4**C is a magnified view of an embodiment of a head of a bone anchor shown in FIG. **4**A.

[0015] FIG. **5**A is a top view of an embodiment of a crown member used in the embodiment shown in FIG. **2**.

[0016] FIG. **5**B is a sectional view, taken along the lines **5**B-**5**B in FIG. **5**A and viewed in the direction of the arrows, of an embodiment of a crown member shown in FIG. **5**A

[0017] FIG. **5**C is a side elevational view of the embodiment shown in FIG. **5**k

[0018] FIG. **6**A is a top view of an embodiment of a retaining member used in the embodiment shown in FIG. **2**.

[0019] FIG. **6**B is a sectional view, taken along the lines of **6**B-**6**B in FIG. **6**A and viewed in the direction of the arrows, of an embodiment of a retaining member shown in FIG. **6**A.

[0020] FIG. **7** is an enlarged sectional view of an embodiment as in FIG. **1**.

[0021] FIG. **8** is an exploded perspective view of an embodiment as in FIG. **7**.

[0022] FIG. **9** is a side elevational view of an embodiment of an adjustable bone anchor assembly.

[0023] FIG. **10** is an exploded view of the embodiment depicted in FIG. **9**.

[0024] FIG. **11** is a side elevational view of an embodiment of a receiver member depicted in FIG. **9**.

[0025] FIG. **12** is a sectional view, taken along the lines of **12**-**12** in FIG. **11** and viewed in the direction of the arrows, of the embodiment of a receiver member shown in FIG. **11**.

[0026] FIG. **13** is a front elevational view of the embodiment of a receiver member depicted in FIG. **9**.

[0027] FIG. **14** is an elevational view of an embodiment of an adjustable bone anchor assembly.

[0028] FIG. **15** is an exploded view of the embodiment shown in FIG. **14**.

[0029] FIG. **16** is an elevational view of the embodiment shown in FIG. **14**, rotated 90 degrees from the position in FIG. **14**.

DESCRIPTION OF THE ILLUSTRATED EMBODIMENTS

[0030] For the purposes of promoting an understanding of the principles of the disclosure, reference will now be made to the embodiments illustrated in the drawings and specific language will be used to describe the same. It will nevertheless be understood that no limitation of the scope of the claims is thereby intended, such alterations and further modifications in the illustrated embodiments, and such further applications of the principles of the disclosure as illustrated therein, being contemplated as would normally occur to one skilled in the art to which the subject matter relates.

[0031] Referring generally to FIGS. **1** and **2**, there is shown an embodiment of a bone anchor assembly **10**. In that embodiment, assembly **10** includes a receiver member **12**, a bone anchor **14**, a crown member **16**, and a retaining member **18**. Assembly **10** is connectable with an elongated

member **20** (FIG. **7**) such as a spinal rod, pin, bar or other implant construct, as further described below.

[**0032**] Referring now additionally to FIGS. **3**A-**3**E, **7** and **8**, an embodiment of the receiver member **12** is shown Receiver member **12** has an axial opening **22** therethrough, which in the illustrated embodiment includes an upper opening portion **24** and a lower opening portion **26**. Opening **22** has a longitudinal axis, which in one embodiment is also a longitudinal axis of receiver member **12**. Part of opening **22** is a chamber **28**. In the illustrated embodiment, chamber **28** has substantially cylindrically-shaped walls or surfaces **32***a* and **32***b* and generally flat walls or surfaces **34***a* and **34***b*, which may be parallel to each other and to the longitudinal axis of receiver member **12**. Walls **34***a*, **34***b* may have respective substantially cylindrical wall portions **36***a*, **36***b*.

[**0033**] Opening portion **22** is partially surrounded by a chamfered or rounded edge **42** at a top portion **43** of receiver member **12**, and is surrounded by chamfered or rounded edge **44** at a bottom portion **45** of receiver member **12**. In or adjacent bottom portion **45** of receiver member **12**, a groove **46** and associated ledge **48** around lower opening **24** may be provided. In the illustrated embodiment, groove **46** is substantially elliptical or otherwise oval and extends around the entire perimeter of opening **22**, although it will be seen that groove **46** could extend only partially around the perimeter of opening **22**. Groove **46** has a depth A (FIG. **7**), and a major diameter B (FIG. **3**C). In the illustrated embodiment, the major diameter of groove **46** is generally parallel to the planes of surfaces **34***a*, **34***b* of receiver member **12**. Upper and lower opening portions **24**, **26** can have a variety of alternative or additional configurations, such as each having one or more sections of differing diameter(s).

[**0034**] Receiver member **12** in the illustrated embodiment includes a pair of upright branches **50**, **52** between which opening **22** extends. Branches **50**, **52** further define a substantially U-shaped channel **54** transverse to opening **22** that communicates with opening **22**, and that is sized to accommodate elongated member **20** (FIG. **7**). In a specific embodiment, internal threads **56** may be provided, which end well above the floor of channel **54**. If a cylindrical rod **20** of diameter equal to the width of channel **54** is placed in channel **54** as deep as possible, i.e. contacting the floor of channel **54**, the upper limit of rod **20** will be below threads **56**. A groove **57**, which may be slightly larger than the major diameter of threads **56**, separates threads **56** from that upper limit of rod **20**. Branches **50**, **52** may also be provided with indentations or holes **58**, which allow the surgeon to grip receiver member **12** with an appropriate forceps, wrench or other gripping or turning tool (not shown). Internal thread **56** in a specific embodiment is a reverse angle thread, i.e. a thread in which a load flank faces down and at lease slightly away from opening **22**, as disclosed in commonly-owned U.S. Pat. No. 6,296,642, the disclosure of which is hereby incorporated by reference in its entirety. Top portion **43** of receiver member **12** (which includes some or all of branches **50**, **52**) is narrower along, channel **54** than bottom portion **45** of receiver member **12** in the illustrated embodiment, which reduces the bulk and profile of receiver member **12**.

[**0035**] Referring now generally to FIGS. **4**A-**4**C, an embodiment of a bone anchor **14** is shown. The illustrated embodiment of bone anchor **14** is a bone screw, which in one embodiment is substantially like the bone screw disclosed in U.S. Pat. No. 5,885,286, the disclosure of which is hereby incorporated by reference in its entirety. Anchor **14** includes an anchorage portion **64** and a head portion **66** joined by a neck or shank portion **67**. In the embodiment in which anchor **14** is a screw, anchorage portion **64** includes at least one thread **68**, which may be a canceilous self-tapping thread. Head portion **66** forms part of a sphere in the illustrated embodiment, though alternative curvate and other configurations may be employed At least one, and in the illustrated embodiment two, flat surfaces **70** may be provided on opposite sides of-head **66**. Head **66**, in one particular embodiment, includes a series of ridges **72** for improving purchase with the inside of crown member **16**. Head **66** may have alternative or additional friction-increasing surface configuration(s) such as roughening, shot peening or knurling. Further, head **66** can include a tool-engaging print **74**, with which a tool (not shown) may be engaged to drive anchorage portion **64** into a bone. Tool-engaging print **74** is an interior print in the illustrated embodiment, although an exterior print could be used, and it may have any of a number of configurations, such as hexagonal, hexalobate, or other torque-transferring configurations. Other embodiments of anchor **14** are contemplated. For example, anchor **14** could be a bone-engaging hook rather than a screw. In that embodiment, anchorage portion **64** would be configured with a hook for engaging tissue, such as a bone portion, rather than a threaded elongated portion.

[**0036**] In one specific example, head **66** has a width between surfaces **70** that is at least slightly smaller than the distance between surfaces **34***a*, **34***b* in receiver member **12**. The diameter of substantially spherical portions of head **66** is at least slightly smaller than the distance between surfaces **32***a*, **32***b* in receiver member **12**. Embodiments of head **66** of anchor **14** may be sized to fit in at least lower opening **26** and chamber **28** of receiver member **12**. As more fully described below, anchor **14** is inserted into receiver member **12**, in one embodiment by inserting head **66** through lower opening portion **26** and into chamber **28** through bottom end **45** of receiver member **12**.

[**0037**] Referring now to FIGS. **5**A-**5**C, there is shown an embodiment of crown member **16**. In that embodiment, crown member **16** is a somewhat oblong disc, having an upper surface **78** with a beveled edge **80** and a lower surface **82**. Crown member **16** has a longitudinal central axis L extending thru a bore **84**. Bore **84** is sized and configured so that head **66**, and specifically tool-engaging print **74**, of anchor **14** may be accessed therethrough. Flat side surfaces **86**, **88** are provided on opposite sides of crown member **16**. Each flat surface **86**, **88** has a small rounded protrusion or tab **90**, **92**, in the illustrated embodiment, extending outwardly from flat surfaces **86**, **88** in a direction transverse to longitudinal axis L. Surfaces **93**, **94** between surfaces **86**, **88** are substantially circular in one embodiment. Lower surface **82** is configured to accommodate head **66** of anchor **14**, and in the illustrated embodiment lower surface **82** has the shape of part of a sphere. In other embodiments, lower surface **82** of crown member **16** can have one or more other shapes. Lower surface **82** can be provided with a friction- or purchase-enhancing surface configuration (e.g. roughening or knurling) for cooperation with head **66** of bone anchor **14**.

[**0038**] Crown member **16** is sized and shaped to fit in chamber **28** of receiver member **12**. The outer dimension of crown member **16** is at least slightly smaller than the inner

dimension of chamber **28** so that crown member **16** is slidably movable within chamber **28** in a longitudinal direction. In a particular embodiment, crown member **16** is sized and configured so that sides **86**, **88** are adjacent walls **34***a*, **34***b*, walls **93**, **94** are adjacent walls **32***a*, **32***b*, and projections **90**, **92** fit at least partially in curved wall sections **36***a*, **36***b* of receiver member **12**. Crown member **16** and/or lower opening **26** of receiver member **12** may be sized so that crown member **16** may be inserted through lower opening **26** and into chamber **28**. Further, in the illustrated embodiment the outer dimension of crown member **16** is larger than the inner dimension of upper opening **24**, so that crown member **16** cannot move into the upper opening portion **24** of the receiver member **12**. The illustrated embodiment of crown member **16** cannot move fully into channel **54** because of interference between sides **86**, **88** and an upper limit of walls **34***a*, **34***b*, and/or because of interference between projections **90**, **92** and an upper limit of walls **36***a*, **36***b*.

[**0039**] Referring now to FIGS. **6**A-**6**B, there is shown an embodiment of retaining member or snap ring **18** of the present invention. In the illustrated embodiment, retaining member **18** is substantially C-shaped spring or clip having arms **95**, **96** separated by a gap **97**. Retaining member **18** includes a top surface **98** and a bottom surface **100**. In the illustrated embodiment, retaining member **18** has a substantially elliptical or otherwise oval outer shape, and also includes internal surfaces **102**, **104**, **106** that substantially surround a substantially circular aperture **108**. In other embodiments, there may be single or multiple internal surfaces surrounding aperture **108**, which surface(s) may be cylindrical, conical, spherical or of other appropriate configuration, or other inner and/or outer shapes of retaining member **18**. In certain embodiments, internal surface **102** forms a portion of a sphere having a radius substantially equal to the radius of head **66** of bone anchor **14**, internal surface **104** is substantially cylindrical, and internal surface **106** is substantially conical and angled outward to allow a greater range of angular positioning of anchor **14**. Retaining member **18** has an unloaded or natural outer width (e.g. minor width W**1** in the elliptic embodiment), i.e. a width measured when retaining member **18** is under no contractive (gap-closing) or expansive (gap-opening) stress. Further, arms **95**, **96** of retaining member **18** have a body width W**2** which in the illustrated embodiment is greater than depth A of groove **46**. The illustrated embodiment of retaining member **18** is further provided with a rotational or hinge area **120**, which may be somewhat narrower than W**2** or other parts of retaining member **18**. The width of retaining member **18**, in one embodiment, is less than that of groove **46**, e g. major and minor widths of an elliptic retaining member **18** are less than major and minor diameters of an elliptic groove **46**. The diameter of aperture **108** when retaining member **18** is in its unloaded state is smaller than the diameter of head **66** of bone anchor **14**. Retaining member **18** may be flat, somewhat wavy or undulating, or otherwise substantially planar in certain embodiments.

[**0040**] Generally referring to FIGS. **1**, **2** and **7**, assembly **10** is assembled in one embodiment substantially as follows. Bone anchor **14**, crown member **16** and retaining member **18** are inserted into receiver member **12** through bottom opening **26**, either individually or substantially in one step. As one example, crown member **16** may be inserted first, followed by bone anchor **14** with retaining member **18** being inserted last. With the illustrated embodiments, crown member **16** may be oriented with respect to receiver member **12** and inserted so that its sides **86**, **88** are adjacent walls **34***a*, **34***b*, walls **93**, **94** are adjacent walls **32***a*, **32***b*, and projections **90**, **92** fit at least partially in curved wall sections **36***a*, **36***b*, and so that its underside **82** generally faces lower opening **26** of receiver member **12**. Crown member **16** may be slidable along the longitudinal axis of receiver member **12** prior to locking. Head **66** of anchor member **14** may be inserted through lower opening **26** to a position adjacent crown member **16** so that a portion of anchor **14** extends through lower opening **26**. A portion of head **66** may be in chamber **28**. Retaining member **18** is placed at least partially in groove **46** so that a portion of anchor **14** goes through aperture **108** of retaining member **18**. Retaining member **18** may be fitted around anchor **14** just below head **66** prior to, during or after insertion of anchor **14** into receiver member **12**. In certain embodiments, retaining member **18** can be placed around anchor **14** by inserting its anchorage portion **64** through aperture **108** and moving retaining member **18** over anchorage portion **64** toward head **66**. In other embodiments, gap **97** of retaining member **18** may be pressed against shank or neck **67** of anchor **14** below head **66**, so that gap **97** expands and shank **67** moves through gap **97** and into aperture **108**, whereupon retaining member **18** may return to its original size and shape. Such expansion of retaining member **18** may be essentially symmetric around -hinge portion **120**. By placing crown member **16** adjacent head **66** of anchor **14**, so that lower surface **82** of crown member **16** adjoins head **66**, and fitting anchor **14** and retaining member **18** together, substantially simultaneous insertion of bone anchor **14**, crown member **16** and retaining member **18** into receiver member **12** can be accomplished.

[**0041**] In inserting retaining member **18**, it may be forced upward into lower opening portion **26**. The surgeon may contract retaining member, making gap **96** smaller, with his or her fingers or other tools, or by forcing retaining member **18** against surfaces **44** and/or **48** of receiving member **12**, until the outer width of retaining member I **8** allows its entry into receiver member **12** through lower opening **26**. Retaining member **18** is further advanced along opening **22** and into groove **46** so that retaining member **18** extends into at least a portion of groove **46**. In embodiments in which retaining member **18** is elliptically shaped, and groove **46** is elliptically shaped, rotation of retaining member **18** about the longitudinal axis of receiver member **12** is limited or prevented by interference of part(s) of retaining member **18** with wall(s) of groove **46**.

[**0042**] Notched area **120** of retaining member **18** allows for easy deflection of the arms **95**, **96** of retaining member **18** by reducing the force necessary to deflect such arms to close gap **97**.

[**0043**] As noted above, in one specific embodiment diameter B of groove **46** is smaller than the outer width W**1** of arms **95**, **96** of retaining member **18** in its natural or unloaded condition. Thus, when retaining member **18** is in groove **46**, retaining member **18** presses against the walls of groove **46**. In other embodiments, diameter B of groove **46** may be the same size or slightly larger than the natural outer width W**1** of retaining member **18**. In this case, the lower surface **100** of retaining member **18** rests upon ledge **48** of groove **46**, and thereby holds retaining member **18** within groove **46**. Retaining member **18** may be expandable so that

arms **95**, **96** contact the sides of groove **46** when assembly **10** is assembled and/or locked. Depth A of groove **46** is less than width W2 of retaining member **18**, in certain embodiments, so that when retaining member **18** is in groove **46**, a portion of retaining member **18** projects into opening **22**.

[**0044**] When retaining ring **18** is in groove **46**, anchor **14** and crown member **16** are retained within opening **24** of receiver member **12**. Crown member **16** is supported by head **66** of anchor **14**, and head **66** is supported by retaining member **18** (e.g by internal surface **102**, if present). Retaining member **18** is held by groove **46** and/or ledge **48** of receiver member **12**. Thus, in this embodiment anchor **14** and crown member **16** do not pass through retaining ring **18** and out of receiver member **12** when retaining ring **18** is within groove **46**. Crown member **16** and head **66** of anchor **14** remain positioned in opening **22** and/or chamber **28** of receiving member **12**, and are slidable substantially along the longitudinal axis of receiver member **12** prior to locking. Anchor **14** is pivotable in one plane with respect to crown member **16** and receiving member **12** prior to locking, but in the illustrated embodiment is substantially limited from pivoting or rotating around the longitudinal axis of receiver member **12** because of the relationship between surfaces **70** of anchor **14** and corresponding surfaces of crown member **16** and/or receiver member **12**.

[**0045**] Use of the illustrated embodiment of assembly **10** will be described with respect to spinal surgery, but it is understood that assembly **10** could be used in connection with other surgical locations or tissues. Assembly **10** can be used in a variety of surgical procedures, such as those for the correction of deformity (such as a scoliotic curvature, where one or both of translation and rotation of vertebrae or other movement in one or both of coronal and sagittal planes may be required), degeneration or trauma suffered by the spine or other tissues.

[**0046**] Assembly **10** may be assembled prior to use in a surgical procedure, although such assembling could be done by the surgeon, an assistant or another at any time. Anchor **14** is provided at a surgical site and connected to a vertebra (not shown). In the embodiment in which anchor **14** is a screw, it is threaded into the vertebra, for example into a prepared (e.g. drilled and tapped) hole. In other embodiments, for example where anchor **14** is a bone hook, threading into a bone and/or drilling a hole in the bone may not be necessary. Anchoring portion **64** is connected to the vertebra, and an appropriate turning tool, e.g. one usable with tool-engaging print **74** of anchor **14** through hole **84** in crown member **16**, may be used to thread anchor **14** into the bone. When anchor **14** has been inserted or otherwise placed with respect to a vertebra to the desired depth, receiver member **12** can be positioned so that opening **22** forms a desired angle with anchor **14**. In the illustrated embodiment, the angle **0** between anchor **14** and opening **22** can be any value up to **30** degrees in either direction. It will be seen that the maximum angle of anchor **14** relative to opening **22** can be changed in several ways, for example by thinning the shank or other portion of anchor **14** beneath head **66**, by providing a steeper angle of surface **44** relative to the longitudinal axis of receiver member **12**, and/or by placing groove **46** as close as possible to bottom end **24** of receiver member **12**. The surgeon may line up channel **54** and an elongated member **20** so that they are parallel, and/or may bend the elongated member to enable it to be easily reduced into receiver member **12** and provide the desired support to the vertebra(e). Assembly **10** allows for movement of receiver member **12** with respect to anchor **14** substantially in one plane, for example the sagittal plane, when or before elongated member **20** and channel **54** are aligned. As noted, surfaces **34***a*, **34***b* inside chamber **28**, outer sides **86**, **88** of crown member **16**, and surfaces **70** on head **66** of anchor **14** will substantially limit or prevent anchor **14** from rotating with respect to receiver member **12** other than substantially in the plane including the longitudinal axis of anchor **14** and parallel to surfaces **70** of anchor **14**.

[**0047**] As noted above, receiver member **12** may be angled with respect to anchor **14**. Elongated member **20**, which may be a cylindrical, flattened or otherwise shaped orthopedic rod, pin, bar, connector, or other implant, is coupled with assembly **10**. Elongated member **20** is placed in channel **54** of receiver member **12**, and adjacent top surface **78** of crown member **16**. A compression member **110** is connected to receiver member **12**, as by threading compression member **110** into threads **56**, and engaged with elongated member **20**. Compression member **110**, in one embodiment, is a set screw or plug having external threads **112** and a print **114** for applying torque, and in a specific embodiment may be a break-off set screw, such as those disclosed in U.S. Pat. No. 5,885,286 to Sherman et al. or U.S. Pat. No. 6,193,719 to Goumay et al., incorporated herein by reference in their entireties. In a further embodiment, thread **112** is a reverse angle thread as disclosed in U.S. Pat. No. 6,296,642 to Morrison et al., incorporated herein by reference in its entirety, which is compatible with a reverse angle embodiment of thread **56** of receiver member **12**, described above. In embodiments in which receiver member **12** is externally threaded, compression member **110** could be an internally-threaded nut.

[**0048**] As compression member **110** is tightened, elongated member **20** is forced downward against crown member **16**, which pushes crown member **16** against head **66** of anchor **14**. Head **66** is thereby clamped between retaining member **18** and crown member **16**. In embodiments in which head **66** includes ridges **72**, ridges **72** are pressed into lower surface **82** of crown member **16**. Head **66** is pressed against retaining member **18** in groove **46**. In this way, anchor **14** is locked with respect to elongated member **20** and the remainder of assembly **10** in the desired angular position.

[**0049**] Materials for the components as described above and in other embodiments include stainless steel, cobalt-chrome alloys, titanium or any other sturdy biocompatible material. In a particular embodiment, crown member **16** may be made of a material somewhat softer than the material used for ridges **72** of head **66** of anchor **14**. Such construction will allow ridges **72** to penetrate somewhat more easily into interior surface **82** of crown member **16** during locking of assembly **10**, thereby providing a more definite purchase between ridges **72** and crown member **16**. In another specific embodiment, crown member **16** may be made of a material somewhat softer than the material used for elongated member **20**. Such construction will allow upper surface **78** of crown member **16** to deform to a shape similar to or approximating that of elongated member **20** during locking of assembly **10**. In other embodiments, elongated member **20** may be somewhat softer than crown member **16** so that upper surface **78** of crown member **16** bites into, penetrates, or otherwise deforms elongated member **20**.

[0050] Referring now generally to FIGS. **9-13**, there is shown another embodiment of a receiver member **212**, which is similar or identical in many respects to the embodiment of receiver member **12**. Features of receiver member **212** that are similar or identical to those of receiver member **12** have the same number with a **200** prefix.

[0051] Receiver member **212** has a lower portion **212***a* and an upper portion **212***b* separated by a thinned section **212***c*, in this illustrated embodiment. Lower portion **212***a* is substantially the same as receiver member **12**, having an opening **222** therethrough with a longitudinal axis, which in one embodiment is also a longitudinal axis of receiver member **212**. Part of opening **222** is a chamber **228**, which in the illustrated embodiment has substantially cylindrically-shaped walls or surfaces (such as surface **232***a* and an opposing surface) and generally flat walls or surfaces **234***a* and **234***b*, which may be parallel to each other and to the longitudinal axis of receiver member **212**. Walls **234***a*, **234***b* may have respective substantially cylindrical wall portions **236***a*, **236***b*. A chamfered or rounded edge **242** may be provided at or near the top of lower portion **212***a* and/or the top of upper portion **212***b*, and a chamfered or rounded edge **244** may be provided at a bottom portion **245** of lower portion **212***a*. A groove **246** and associated ledge **248** may also be provided. Groove **246** is configured substantially like groove **46**, with shape(s) and dimension(s) as described and suggested above.

[0052] Receiver member **212** in the illustrated embodiment includes a pair of upright branches **250**, **252** between which opening **222** extends. Branches **250**, **252** further define a substantially U-shaped channel **254** transverse to opening **222** that communicates with opening **222**, and that is sized to accommodate an elongated member. A portion of each branch **250**, **252** forms at least a part of lower portion **212***a* of receiver member **212**, and a portion of each branch **250**, **252** forms at least a part of upper portion **212***b* of receiver member **212**. In a specific embodiment, internal threads **256** are formed in branches **250**, **252** through substantially the entire length of upper portion **212***b* and into lower portion **212***a*. Threads **256**, if provided, end well above the floor of channel **254**. If a cylindrical rod **220** of diameter equal to the width of channel **254** is placed in channel **254** as deep as possible, i.e. contacting the floor of channel **254**, the upper limit of rod **220** will be below threads **256**. A groove **257**, which may be slightly larger than the major diameter of threads **256**, separates threads **256** from that upper limit of rod **220**. Branches **250**, **252** may also be provided with indentations or holes **258**, which allow the surgeon to grip receiver member **212** (or either or-both of portions **212***a*, **212***b*) with an appropriate forceps, wrench or other gripping or turning tool (not shown). Threads **256** in a specific embodiment can be a reverse angle thread, i.e. a thread in which a load flank faces down and at lease slightly away from opening **222**, as disclosed in commonly-owned U.S. Pat. No. **6,296,642**, the disclosure of which is hereby incorporated by reference in its entirety.

[0053] Upper portion **212***b* of receiver member **212** includes portions of branches **250**, **252** having internal threads **256** and indentations **258** as discussed above, in the illustrated embodiment. Threads **256** may configured so that they are essentially continuous from upper portion **212***b* to lower portion **212***a*, with the possible exception of the portion at or around section **212***c*. In that embodiment, a compression member (e.g. compression member **110** described above) can be inserted into upper portion **212***b* and moved down to lower portion **212***a*. For example, a set screw threaded into upper portion **212***b* can be threaded along opening **222** into lower portion **212***a* In the illustrated embodiment, upper portion **212***b* is integrally formed with lower portion **212***a*, although in other embodiments portions **212***a* and **212***b* can be separately made and joined together, or otherwise formed. Further, the illustrated embodiment shows upper portion **212***b* to be of a height approximately the same as or slightly less than that of lower portion **212***a*. Other embodiments of receiver member **212** could include an upper portion **212***b* having a height that is half or less than that of lower portion **212***a*, or could include an upper portion **212***b* having a height that is substantially larger than that of lower portion **212***a*.

[0054] Thinned section **212***c*, as noted above, separates upper portion **212***b* and lower portion **212***a* in the illustrated embodiment. This embodiment of section **212***c* includes an external indentation or groove **260**, which may include scoring lines or other fracture-inducing or fracture-enabling features. An interior indentation **261** is also provided in the illustrated embodiment, which may interrupt threads **256** (if present) and may be somewhat deeper than the major diameter of threads **256**. Section **212***c* has a thickness which is at least slightly less than the overall thickness of branches **250**, **252**, and in a particular embodiment that thickness is at least slightly less than the thickness of branches **250**, **252** measured from a thread trough in a branch to the exterior of that branch.

[0055] Receiver member **212** can be assembled substantially as described above with embodiments of an anchor member **14**, a crown member **16**, and a retaining member **18**, such as those similar or identical to the embodiments described above, to make a bone anchor assembly. Further, the assembly made with receiver member **212** can be used in surgery substantially as described above. When the surgeon wishes to insert an elongated member **220** into receiver member **212**, he or she need not bend it or use a special reducing tool to insert it into the lower end of a receiving channel. Rather, he or she places a portion of elongated member **220** into channel **254** in upper portion **212***b* of receiver member **212**. A set screw or other compression member (e.g. compression member **110** described above) is inserted into opening **222** above elongated member **220**. In the embodiment in which the compression member is a set screw, the set screw is threaded into threads **256**, forcing elongated member **220** further down in channel **254**. In this way, elongated member **220** is forced all the way through upper portion **212***b*, into lower portion **212***a*, and against a crown member and/or anchor member in chamber **228**, substantially as described above with respect to assembly **10**.

[0056] Once the compression member is tightened against elongated member **220** to lock the assembly to the surgeon's satisfaction, upper portion **212***b* may be cut or sheared off or otherwise removed from lower portion **212***a* As one example, tool(s) for gripping or turning could be connected to one or both of upper portion **212***b* and lower portion **212***a* and torque could be applied to shear or twist the portions apart. As another example, a tool with relatively sharp jaws could be applied to exterior groove **260** to cut off upper portion **212***b*. Other methods for physically separating upper

portion **212***a* from lower portion **212***b* may be used. Once separated, upper portion **212***b* may be removed from the surgical site and discarded.

[**0057**] As will be noted from the above description, certain embodiments provide a bone anchor having a head portion and an anchoring portion that can pivot with respect to each other in substantially one plane, e.g a sagittal plane, a transverse plane, a plane substantially between a sagittal and a transverse plane, or another plane. Such embodiments may be essentially locked against pivoting with respect to each other in other planes by virtue of internal configurations.

[**0058**] As previously noted, the embodiments described above (and others) can be used for a variety of surgical procedures. Another example of such a procedure concerns applications in which a spinal trauma or degenerative condition exists, and one or more assemblies **10** are used in which the receiver member **12**, **212** and the anchor **14** can pivot with respect to each other in substantially one plane. In such cases, assembly **10** can be introduced to a surgical site as described herein or otherwise as the surgeon may desire, and inserted into vertebral tissue. In many surgical procedures, the surgeon may prefer to install assembly **10** so that the plane in which receiver member **12**, **212** and anchor **14** can pivot with respect to each other is substantially sagittal, substantially vertical, and/or substantially parallel to at least part of the spinal column. It will be understood, of course, that the surgeon may orient assembly **10** as he or she wishes, for example so that the plane in which receiver member **12**, **212** and anchor **14** can pivot with respect to each other is non-sagitally oriented.

[**0059**] Once assembly **10** is inserted into a vertebra, it can be threaded into a position that is one-quarter turn (90 degrees) short of its final position with respect to the vertebra. For example, in a situation in which the final position of assembly **10** with respect to a vertebra is to be such that channel **54**, 254 points substantially sagitally or receiver member **12**, **212** can pivot in substantially a sagittal plane, assembly **10** can be threaded into a vertebra so that it is one-quarter turn dorsal of that final position (e.g. substantially in a lateral plane). In such a pre-final position, movement in the sagittal plane of receiver member **12**, **212** with respect to anchor **14** is substantially limited or prevented. Correction techniques useful in addressing trauma and/or degenerative conditions, such as compression, distraction, rotation and/or other adjustments of vertebrae or vertebral segments, can be applied to bones or to assembly **10** (or multiple assemblies **10**, if they are used) in such pre-final positions in vertebrae. For example, if compression is desired, the surgeon may press assemblies **10** together with his or her fingers or with a tool (not shown). As another example, if distraction is desired, the surgeon may pull or push apart assemblies **10** with his or her fingers or with a tool (not shown). In either case, force applied to the sides of assemblies **10** will cause a change in relative position between assemblies **10**, and will not substantially pivot receiver members **12**, **212** of assemblies **10** with respect to their respective anchors **14**. An interbody device may be implanted between the adjusted vertebrae so as to maintain the desired spacing between the vertebrae. Such operations on vertebrae, on one or more assemblies **10**, or other orthopedic elements may be made as the surgeon desires and/or as dictated by a particular patient's condition.

[**0060**] Once any adjustment of vertebrae has been performed, and the spine or a portion of it is in a position desired by the surgeon, assembly(s) **10** can be driven the final one-quarter turn into their respective vertebrae. Assembly(s) **10** then rest in the final position with respect to the vertebrae desired by the surgeon An elongated member, such as a spinal rod, bar or other item, may be inserted into channel **54**, **254** of receiver member **12**, **212** of each assembly **10** and locked, substantially as described above. Using embodiments of the above methods and assemblies, the surgeon has in one device an essentially rigid screw in the direction of distraction and compression when needed, and in its final position a pivotable, angularly adjustable screw when a rod or other elongated member is being seated in it. It will be seen that embodiments of the methods described herein using two or more bone anchor assemblies can, as examples, use assembly **10** for each such bone anchor assembly, or can use other types of anchors along with one or more assembly **10**.

[**0061**] While the embodiments have been illustrated and described in detail in the drawings and foregoing description, the same is to be considered as illustrative and not restrictive in character, it being understood that only certain embodiments have been shown and described and that all changes and modifications that come within the spirit of the disclosure are desired to be protected.

[**0062**] For example, the illustrated embodiment of assembly **10** shows an arrangement of surfaces **34***a*, **34***b* of receiver member **12** that will permit pivoting of anchor member **14** in a plane containing an axis through channel **54**. That is, the illustrated embodiment of assembly **10** shows substantially cylindrically-shaped surfaces **32***a* and **32***b* below channel **54** and generally flat surfaces **34***a* and **34***b* below branches **50**, **52**. Surfaces **34***a*, **34***b* could be positioned elsewhere in receiver member **12** so that a plane in which anchor member **14** pivots is oblique or perpendicular to channel **54** and to an elongated member **20** in it. An embodiment is shown in FIGS. **14-16** in which anchor member **14** pivots substantially perpendicularly to channel **54'** in receiver member **12'**, i.e. in a transverse plane, making an angle **0** with respect to a longitudinal axis of receiver member **12'**. In that embodiment, internal geometry of receiver member **12'** is rotated about 90 degrees from that of receiver members **12**, **212** shown in FIGS. **1-3**E and **8-13**, e.g., substantially cylindrically-shaped surfaces are below channel **54'** and generally flat surfaces are below branches **50'**, **52'** In other respects, this embodiment of an assembly **10'** is similar or identical to assembly **10** and parts previously shown and described. If an elliptical groove (similar to groove **46**) and retaining member (similar to member **18**) are used in assembly **10'**, the major diameter of the groove could be repositioned so as to be substantially parallel to the planes of one or more generally flat surfaces in receiver member **12'**, which may be comparable to surfaces **34***a*, **34***b* of receiver member **12**.

[**0063**] Assembly **10'** is used and assembled substantially as described above with respect to assembly **10**. Assembly **10'** can provide for certain orthopedic correction techniques, such as those described above with respect to inserting assembly **10** to a "pre-final" position. Once assembly **10'** is inserted into a vertebra as desired, movement in a plane substantially along a rod (e.g. the sagittal plane) of receiver member **12'** with respect to anchor **14** is substantially limited

or prevented. Correction techniques useful in addressing trauma and/or degenerative conditions, such as compression, distraction, rotation and/or other adjustments of vertebrae or vertebral segments, can be applied to assembly **10'** (or multiple assemblies **10'**, if they are used) or to bones. For example, if compression is desired, the surgeon may press assemblies **10'** together with his or her fingers or with a tool (not shown). As another example, if distraction is desired, the surgeon may pull or push apart assemblies **10'** with his or her fingers or with a tool (not shown). In either case, force applied to the sides of assemblies **10'** will cause a change in relative position between assemblies **10'**, and will not substantially pivot receiver members **12'** of assemblies **10'** with respect to their respective anchors **14**. An interbody device may be implanted between the adjusted vertebrae so as to maintain the desired spacing between the vertebrae. As previously noted, such operations on vertebrae, on one or more assemblies **10'**, or other orthopedic elements may be made as the surgeon desires and/or as dictated by a particular patient's condition.

[**0064**] As another example, embodiments of assembly **10** could be made without crown member **16**. In such embodiments, surfaces **70** of head **66** of anchor **14** will be adjacent surfaces **34***a*, **34***b* of receiver member **12**, and the relationship between surfaces **70** and **34***a*, **34***b* will limit pivoting of anchor **14** with respect to receiver member **12** to substantially one plane. Further, elongated member **20** would bear directly against head **66** in such embodiments.

[**0065**] As discussed above, several embodiments of the assembly have receiver members that are generally pivotable with respect to tissue or an anchor in such tissue in substantially one plane. That plane may be determined by the configuration of the assembly and/or by its positioning relative to tissue (e.g. a vertebra or other bone tissue). Surfaces within a receiver member of the assembly, surfaces on a crown member, and/or other features can be oriented so that an anchor and receiver member can pivot with respect to each other in a plane substantially parallel to the receiver member's channel, substantially perpendicular to the channel, or at any angle to the channel. The assembly can be connected to tissue so that the receiver member pivots substantially in one of an infinite number of planes, for example by rotating a screw-type anchor of an assembly into bone to a degree that produces pivoting substantially in a desired plane. With reference to a human body, such a plane may be substantially sagittal, substantially transverse, or may be between sagittal and transverse, or any other plane desired by the surgeon and permitted by the anatomy to be instrumented. An assembly in which the receiver member is pivotable with respect to an anchor, or tissue to which the anchor is connected, in a plane between a sagittal and a transverse plane can be useful in implant constructs in the lower vertebrae, sacral and/or iliac area, among other surgical situations or procedures.

What is claimed is:

1. An orthopedic medical apparatus comprising:

a receiver member having a longitudinal aperture, a channel for receiving an elongated member transverse to said aperture, a lower opening, and a groove communicating with said longitudinal aperture;

a bone anchor member having a longitudinal axis and a head, said head having a substantially part-spherical portion and at least one flat portion, said flat portion being substantially parallel to said axis, at least a portion of said head being in said aperture;

a crown member having a rounded lower surface, a pair of opposed substantially flat surfaces, and a pair of opposed substantially cylindrical surfaces, said crown member being placed in said aperture so that said lower surface is adjacent said head of said anchor member; and

a retaining member at least partially within said groove and around at least a portion of said anchor member, said retaining member being substantially elliptic.

2. The apparatus of claim 1, further comprising an elongated member at least partially in said channel.

3. The apparatus of claim 2, further comprising a compression member connected to said receiver member, wherein said compression member exerts compression on said elongated member.

4. The apparatus of claim 1, wherein said anchor member includes at least two substantially flat portions, said flat portions being substantially parallel to said axis.

5. The apparatus of claim 4, wherein said flat portions are substantially parallel to each other.

6. The apparatus of claim 1, wherein said lower surface of said crown member includes at least one substantially flat surface, and said substantially flat surface of said crown member is adjacent said substantially flat surface of said anchor member.

7. The apparatus of claim 1, wherein said crown member includes an opening in one of said substantially cylindrical sides.

8. The apparatus of claim 7, wherein said crown member includes a second opening in the other of said substantially cylindrical sides.

9. The apparatus of claim 1, further comprising:

an elongated member at least partially in said channel;

an orthopedic implant connected to a part of said elongated member and spaced from said receiver member.

10. The apparatus of claim 9, wherein said orthopedic implant is from the set consisting of a hook, a screw, a connector, a plate, and a clamp.

11. The apparatus of claim 1, wherein said receiver member channel has an axis substantially along which the elongated member runs, and wherein said anchor member is positioned with respect to said receiver member so that said anchor member can pivot with respect to said receiver member in substantially a single plane, said plane being one that substantially contains said channel axis.

12. The apparatus of claim 1, wherein said receiver member channel has an axis substantially along which the elongated member runs, and wherein said anchor member is positioned with respect to said receiver member so that said anchor member can pivot with respect to said receiver member in substantially a single plane, said plane being one that is substantially perpendicular to said channel axis.

13. The apparatus of claim 1, wherein said receiver member channel has an axis substantially along which the elongated member runs, and wherein said anchor member is positioned with respect to said receiver member so that said anchor member can pivot with respect to said receiver member in substantially a single plane, said plane being one that is substantially oblique to said channel axis.

14. An orthopedic medical apparatus, comprising:

a receiver member having an internal chamber with at least one substantially flat wall;

a crown member at least partially in said chamber; and

a bone anchor member having a longitudinal axis and head portion with at least one substantially flat wall, said head portion being adjacent said crown member, said wall of said anchor member being substantially parallel to said longitudinal axis and said wall of said receiver member,

wherein said anchor member can pivot with respect to said receiver member in a single plane.

15. The apparatus of claim 14, wherein said chamber has two substantially flat walls that are substantially parallel to each other, and wherein said head portion has two substantially flat walls that are substantially parallel to each other.

16. The apparatus of claim 14, further comprising an elongated member connected to said receiver member, wherein said elongated member does not contact said anchor member.

17. The apparatus of claim 16, wherein said flat wall of said receiver member is positioned so that said plane is one that substantially contains the portion of said elongated member within said receiver member.

18. The apparatus of claim 17, wherein said flat wall of said receiver member is positioned so that said plane is one that is substantially perpendicular to the portion of said elongated member within said receiver member.

19. The apparatus of claim 14, wherein said wall of said chamber has an elongated concave portion, and said crown member has a projection extending from said wall of said crown member, and wherein said projection fits slidably in said concave portion.

20. The apparatus of claim 14, wherein said crown member has at least one substantially flat wall adjacent said wall of said chamber.

21. The apparatus of claim 14, wherein when said apparatus is implanted in a body, said plane is substantially a sagittal plane.

22. The apparatus of claim 14, wherein when said apparatus is implanted in a body, said plane is substantially a transverse plane.

23. The apparatus of claim 14, wherein when said apparatus is implanted in a body, said plane is substantially between a sagittal plane and a transverse plane.

24. A medical implant apparatus, comprising:

a receiver member having a longitudinal axis and defining an upper opening portion and a lower opening portion, a channel transverse to and communicating with said upper opening portion, and an interior groove in said member substantially perpendicular to said axis;

a bone anchor member having a head portion with a longitudinal axis, an outer dimension and at least one substantially flat wall, said wall of said anchor member being substantially parallel to said axis; and

a substantially planar retaining member having an inner dimension smaller than said outer dimension of said head, said retaining member occupying at least a portion of said groove.

25. The apparatus of claim 24, wherein said receiver member has a flat wall parallel to said wall of said anchor member, said wall of said receiver member is substantially parallel to said axis of said receiver member.

26. The apparatus of claim 24, wherein said retaining member has an outer dimension that is at least partially substantially oval, and said groove has a dimension that is at least partially substantially oval, whereby relative movement of said retaining member in said groove is substantially limited.

27. The apparatus of claim 24, wherein said retaining member is one of substantially flat and undulating.

28. The apparatus of claim 24, wherein said head portion has two substantially flat walls that are substantially parallel to each other.

29. The apparatus of claim 24, further comprising:

an elongated member received in said receiver member; and

a compression member connected to said receiver member and contacting said elongated member.

30. A medical implant apparatus comprising:

a receiver member having a longitudinal axis and defining an upper portion, a middle thinned portion, and a lower portion, a channel adapted to receive an elongate member transverse to said axis; and

a bone anchor member connected to said receiver member,

wherein said upper portion can be removed from said lower portion substantially at said middle portion.

31. The apparatus of claim 30, further comprising an elongated member received in said channel of said receiver member so that substantially all of the elongated member is below said middle portion.

32. The apparatus of claim 30, wherein said upper portion has a first height and said lower portion has a second height, and said first height is less than or equal to said second height.

33. The apparatus of claim 30, further comprising:

a crown member at least partially in said receiver member; and

a bone anchor member having a longitudinal axis and head portion with at least one substantially flat wall, said head portion being adjacent said crown member, said wall of said anchor member being substantially parallel to said longitudinal axis,

wherein said anchor member can pivot with respect to said receiver member in a single plane.

34. The apparatus of claim 33, wherein said receiver member includes a groove, and further comprising a retaining member at least partially in said groove, wherein said head of said anchor member is between said crown member and said retaining member.

35. A method comprising:

providing an apparatus having a receiver member and an anchor member, said receiver member having a channel, said receiver member and said anchor member being pivotable with respect to each other in substantially a first plane, and substantially immovable with respect to each other in a second plane substantially perpendicular to said first plane;

connecting said apparatus to a vertebra; and

locking an elongated member in said channel.

36. The method of claim 35, wherein when said apparatus is connected to a vertebra, said first plane is a substantially sagittal plane.

37. The method of claim 35, wherein when said apparatus is connected to a vertebra, said first plane is a substantially transverse plane.

38. The method of claim 35, wherein when said apparatus is connected to a vertebra, said first plane is substantially between a sagittal plane and a transverse plane.

39. The method of claim 35, wherein said anchor member is threaded, and said connecting includes a first threading of said anchor member into a vertebra so that said apparatus is about 90 degrees short of a desired final angular position with respect to the vertebra, and after a period a second threading of said anchor into the vertebra so that said apparatus is substantially in the final angular position.

40. The method of claim 39, further comprising performing an operation on said apparatus during the period between said first threading and said second threading.

41. The method of claim 40, wherein said operation is from the group consisting of distraction, compression, and rotation, said operation being performed with respect to another vertebra or orthopedic device.

42. The method of claim 35, further comprising providing a second apparatus having a receiver member and an anchor member, said receiver member and said anchor member of said second apparatus being pivotable with respect to each other in substantially a third plane, and substantially immovable with respect to each other in a fourth plane substantially perpendicular to said third plane;

connecting said second apparatus to a second vertebra; and

locking said elongated member to said second apparatus.

43. The method of claim 35, wherein said first plane is one that substantially includes or is parallel to the portion of said elongated member connected to said apparatus.

44. The method of claim 35, wherein said first plane is substantially perpendicular to the portion of said elongated member connected to said apparatus.

45. The method of claim 35, wherein said first plane is substantially oblique to the portion of said elongated member connected to said apparatus.

* * * * *