US 20060236219A1

(19) United States

(12) Patent Application Publication

(10) Pub. No.: US 2006/0236219 A1

(43) Pub. Date: Oct. 19, 2006

Grigorovitch et al.

(54) MEDIA TIMELINE PROCESSING INFRASTRUCTURE

(75) Inventors: **Alexandre V. Grigorovitch**, Redmond, WA (US); **Shafiq Ur Rahman**, Redmond, WA (US); **Sohail Baig Mohammed**, Redmond, WA (US); **Geoffrey T. Dunbar**, Kirkland, WA (US)

Correspondence Address:
LEE & HAYES PLLC
421 W RIVERSIDE AVENUE SUITE 500
SPOKANE, WA 99201

(73) Assignee: **Microsoft Corporation**, Redmond, WA (US)

(21) Appl. No.: **11/109,291**

(22) Filed: **Apr. 19, 2005**

Publication Classification

(51) **Int. Cl.**
G06F 17/00 (2006.01)

(52) **U.S. Cl.** **715/500.1**

(57) **ABSTRACT**

A media timeline processing infrastructure is described. In an implementation, one or more computer readable media include computer executable instructs that, when executed, provide an infrastructure having an application programming interface that is configured to accept a plurality of segments from an application for sequential rendering. Each of the segments reference at least one media item for rendering by the infrastructure and each segment is taken from a media timeline by an application.

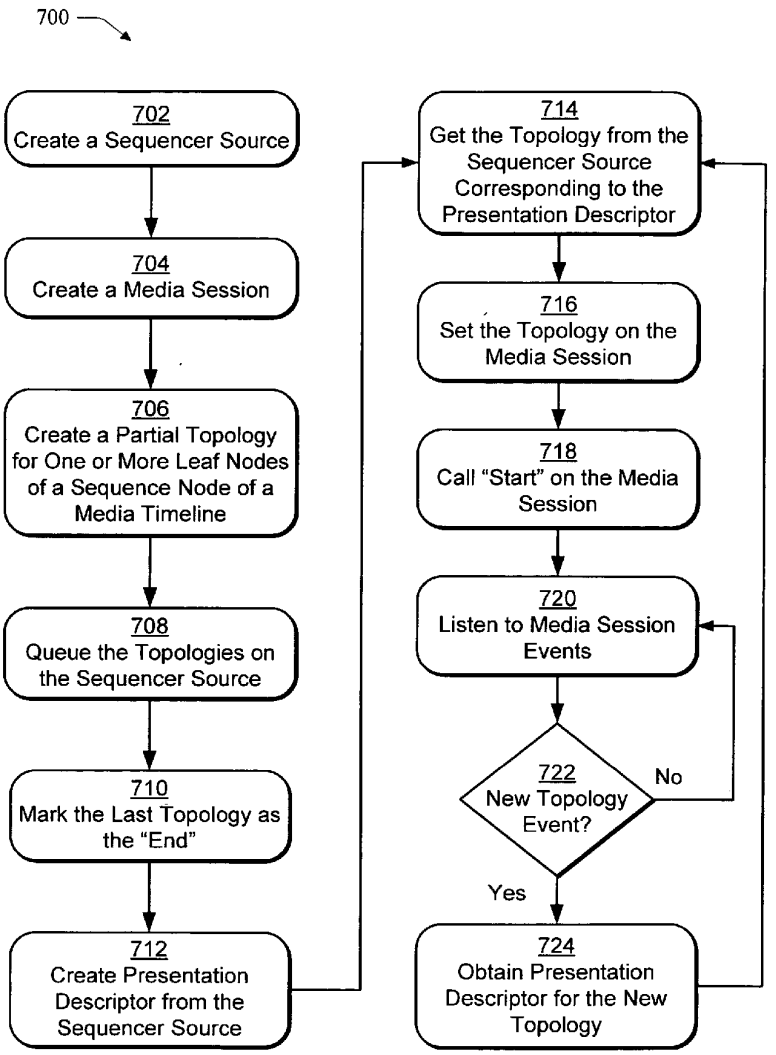

Amazon v. Audio Pod
US Patent 8,738,740
Amazon EX-1052

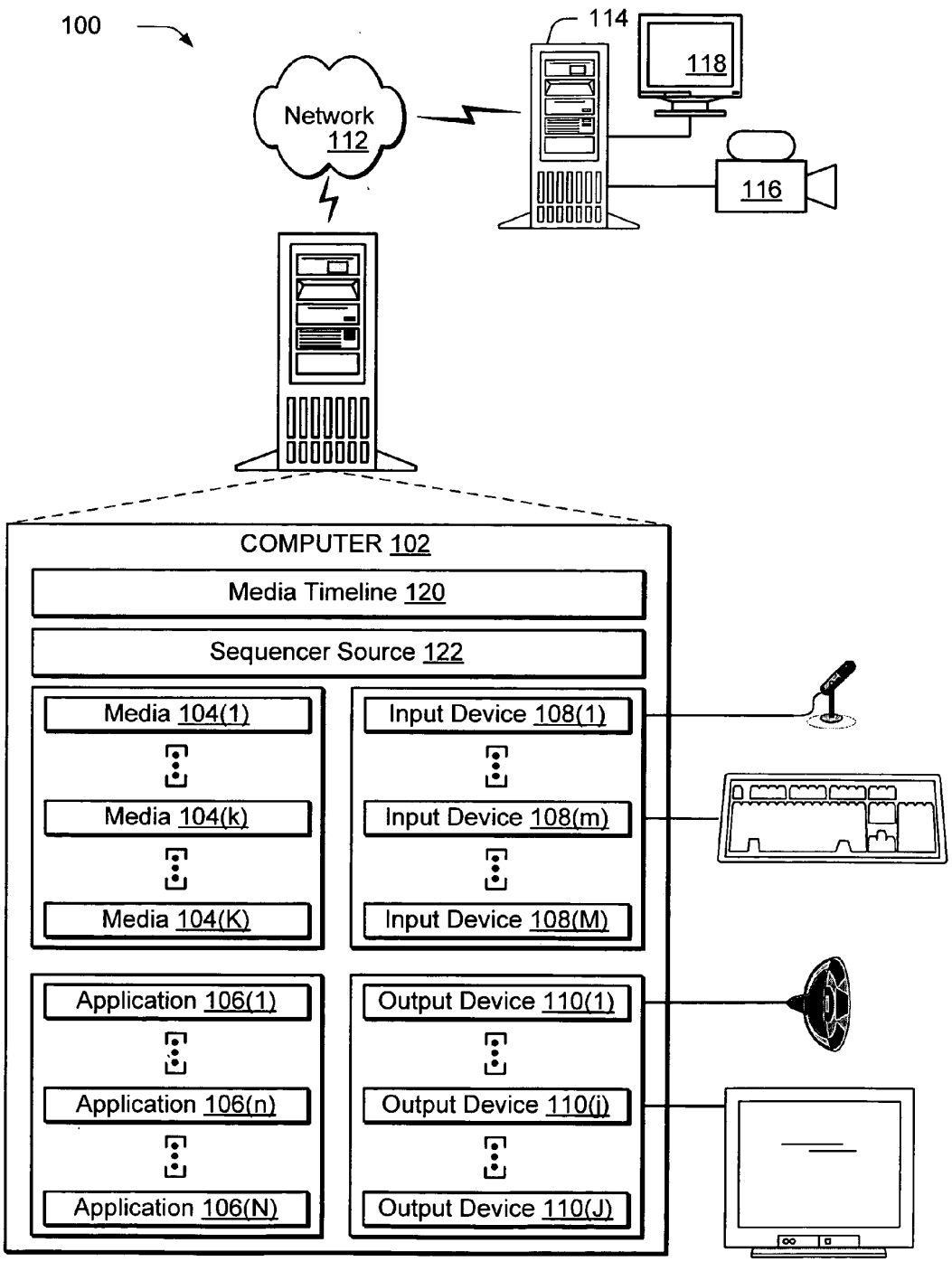
100
114
118
Network
112
116
COMPUTER 102
Media Timeline 120
Sequencer Source 122
Media 104(1)
Media 104(k)
Media 104(K)
Input Device 108(1)
Input Device 108(m)
Input Device 108(M)
Application 106(1)
Application 106(n)
Application 106(N)
Output Device 110(1)
Output Device 110(j)
Output Device 110(J)

Fig. 1

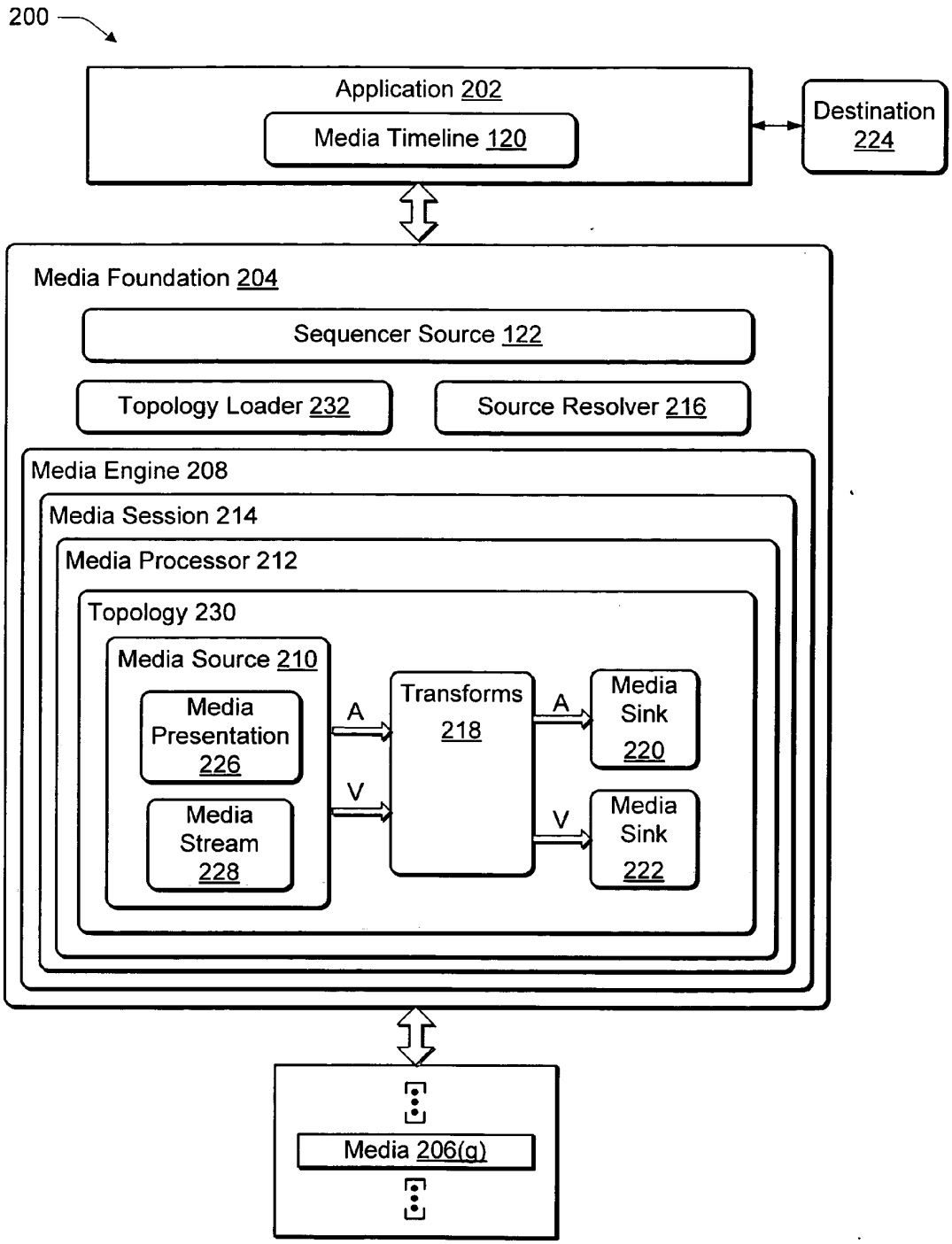
200
Application 202
Media Timeline 120
Destination 224
Media Foundation 204
Sequencer Source 122
Topology Loader 232
Source Resolver 216
Media Engine 208
Media Session 214
Media Processor 212
Topology 230
Media Source 210
Media Presentation 226
Media Stream 228
A
V
Transforms 218
A
V
Media Sink 220
Media Sink 222
Media 206(g)

Fig. 2

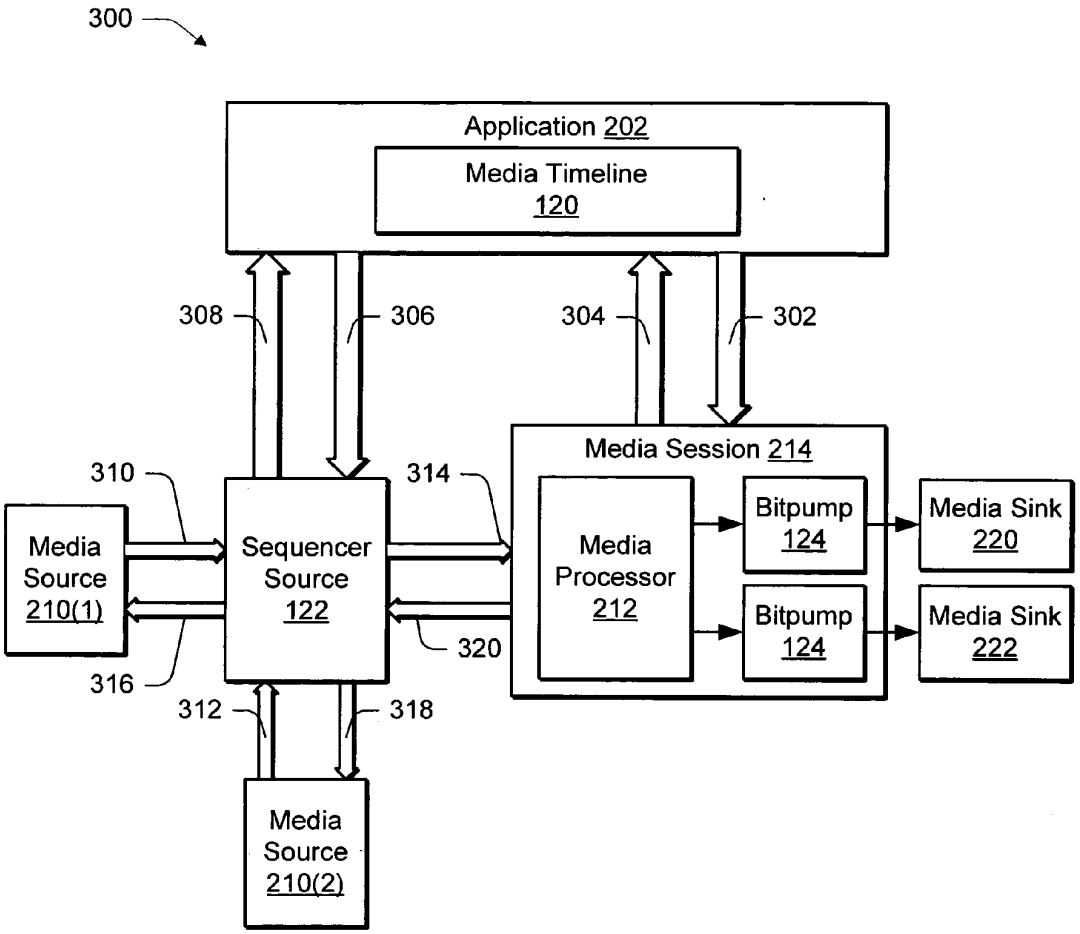
300
Application 202
Media Timeline
120
308
306
304
302
Media Session 214
310
314
Media
Source
210(1)
Sequencer
Source
122
Media
Processor
212
Bitpump
124
Bitpump
124
Media Sink
220
Media Sink
222
316
320
312
318
Media
Source
210(2)

Fig. 3

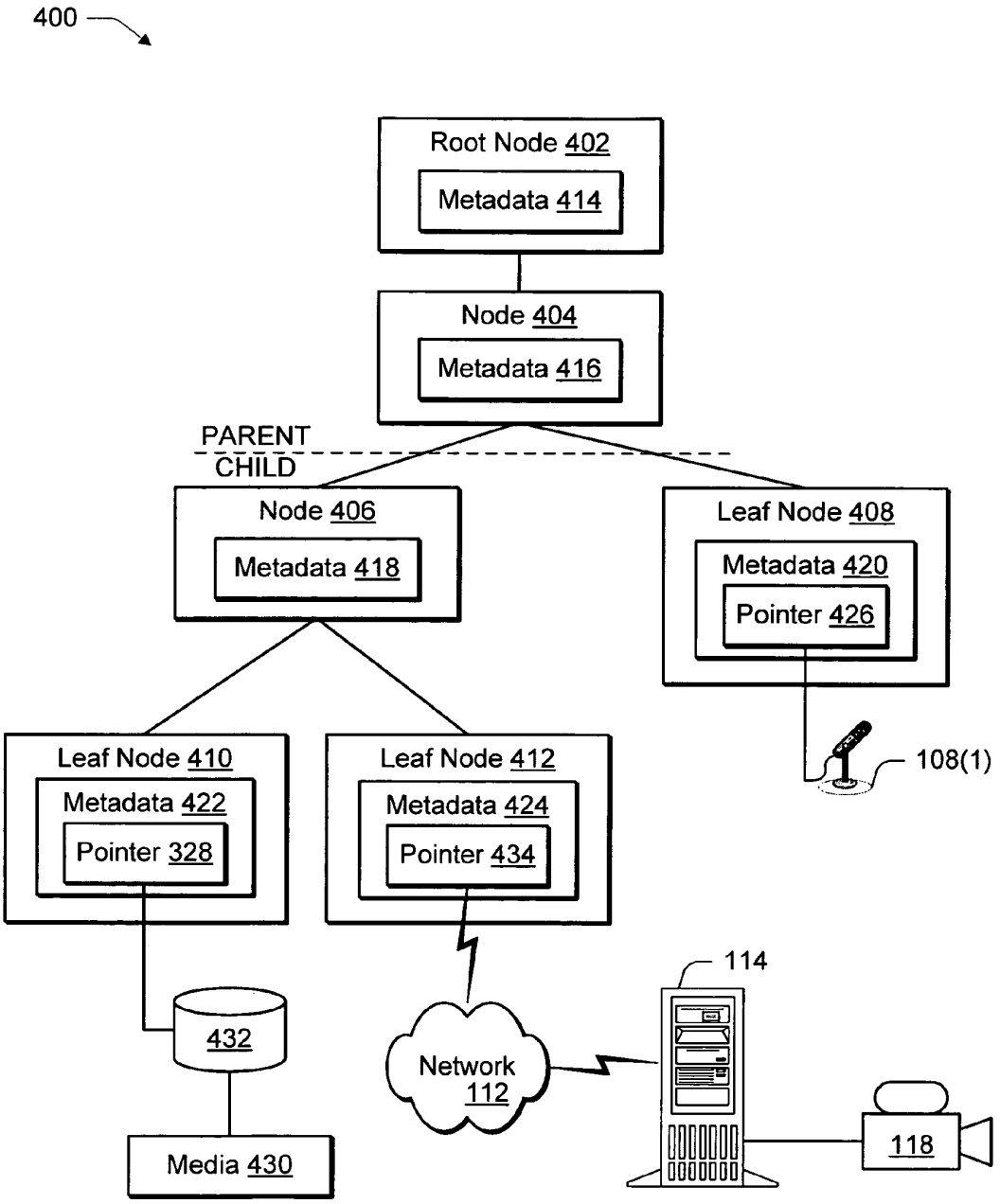
400
Root Node 402
Metadata 414
Node 404
Metadata 416
PARENT
CHILD
Node 406
Metadata 418
Leaf Node 408
Metadata 420
Pointer 426
108(1)
Leaf Node 410
Metadata 422
Pointer 328
Leaf Node 412
Metadata 424
Pointer 434
114
432
Network
112
118
Media 430

Fig. 4

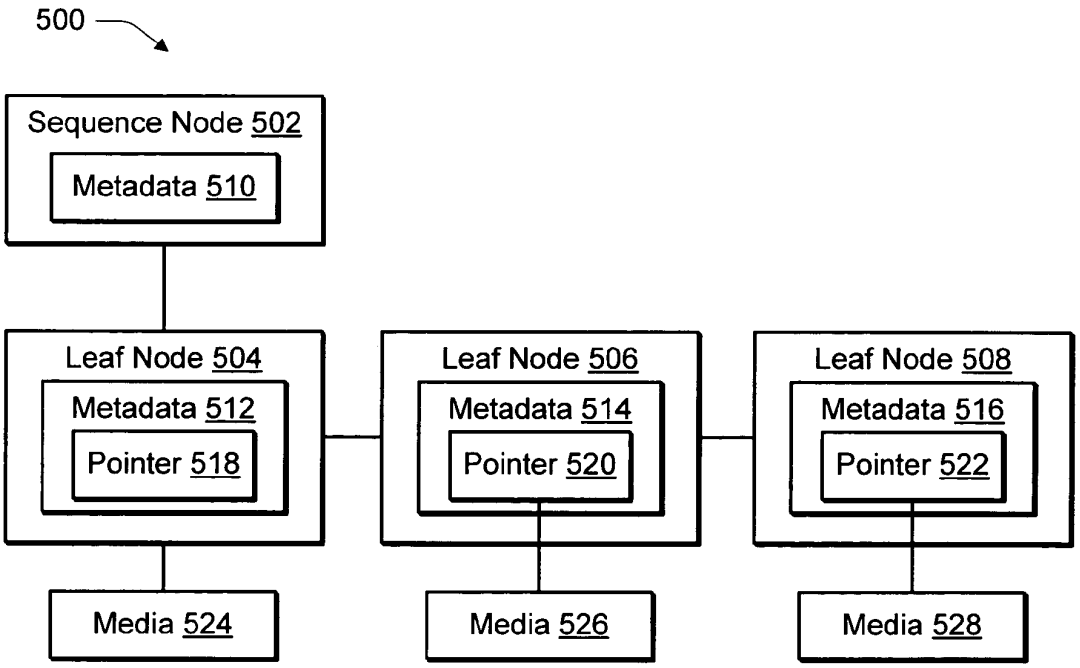
500
Sequence Node 502
Metadata 510
Leaf Node 504
Metadata 512
Pointer 518
Leaf Node 506
Metadata 514
Pointer 520
Leaf Node 508
Metadata 516
Pointer 522
Media 524
Media 526
Media 528

Fig. 5

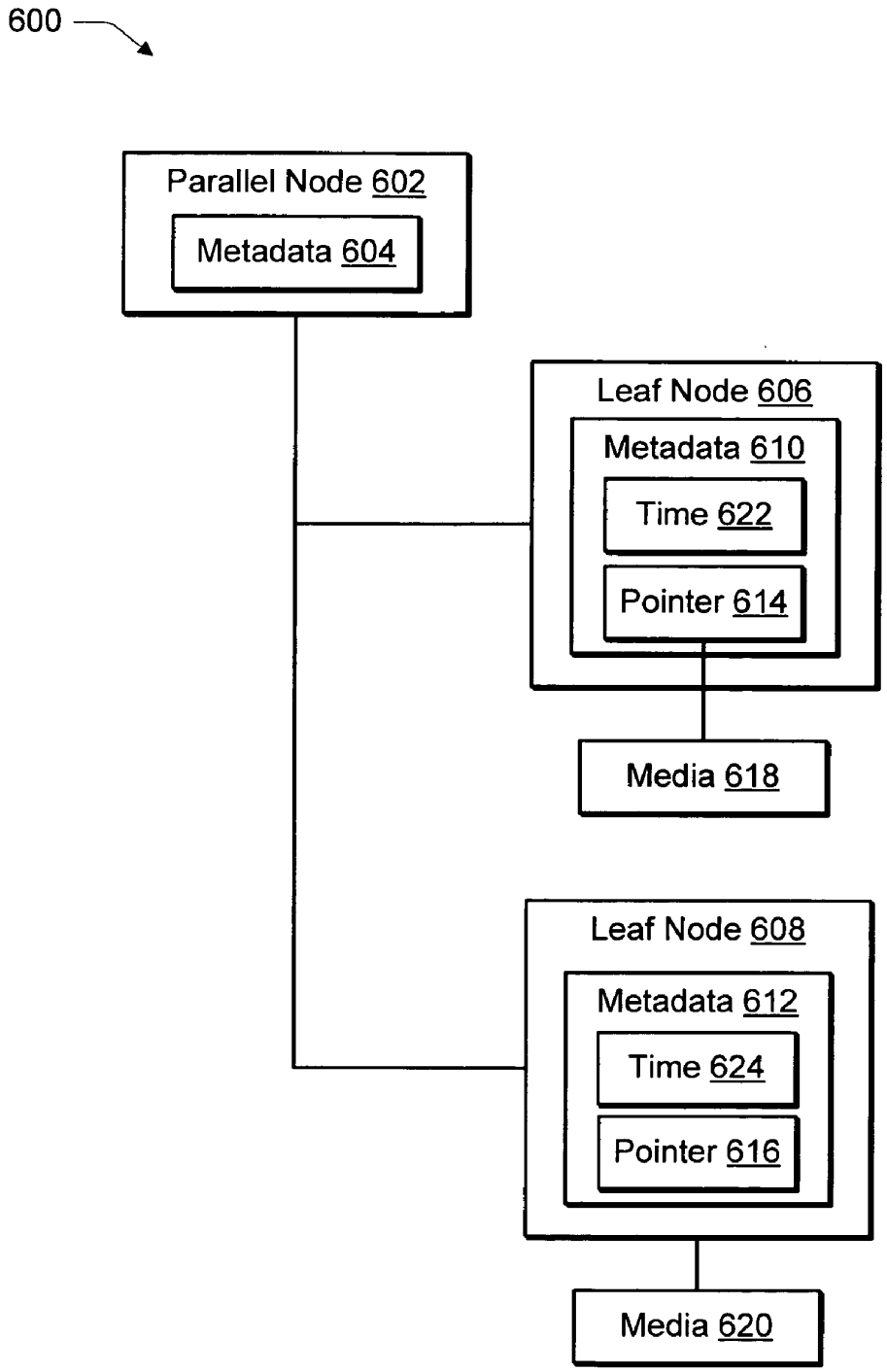
600
Parallel Node 602
Metadata 604
Leaf Node 606
Metadata 610
Time 622
Pointer 614
Media 618
Leaf Node 608
Metadata 612
Time 624
Pointer 616
Media 620

Fig. 6

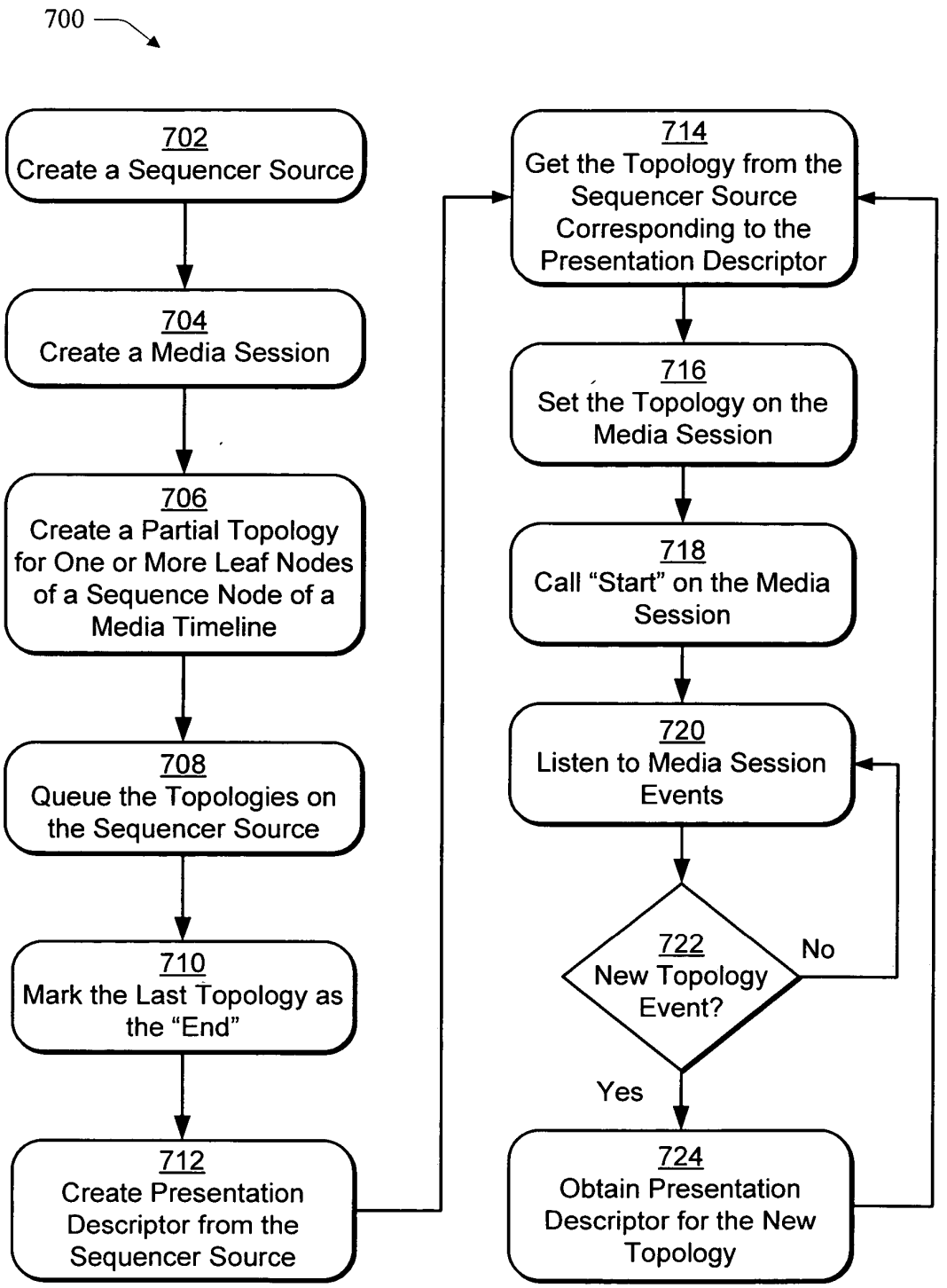
700
702
Create a Sequencer Source
704
Create a Media Session
706
Create a Partial Topology for One or More Leaf Nodes of a Sequence Node of a Media Timeline
708
Queue the Topologies on the Sequencer Source
710
Mark the Last Topology as the "End"
712
Create Presentation Descriptor from the Sequencer Source
714
Get the Topology from the Sequencer Source Corresponding to the Presentation Descriptor
716
Set the Topology on the Media Session
718
Call "Start" on the Media Session
720
Listen to Media Session Events
722
New Topology Event?
No
Yes
724
Obtain Presentation Descriptor for the New Topology

Fig. 7

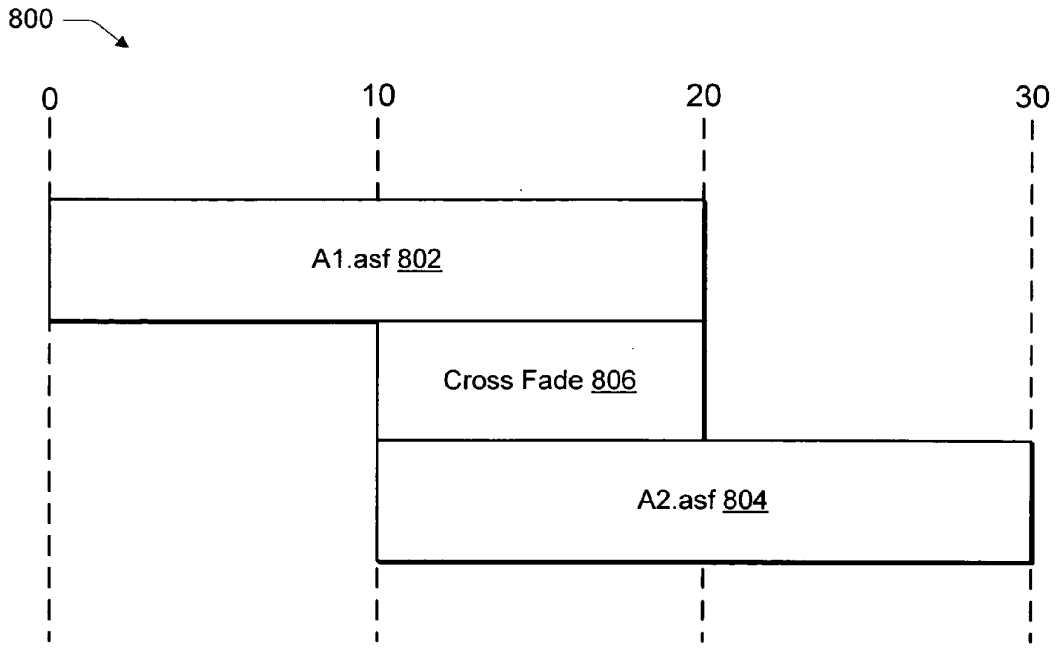
800
0
10
20
30
A1.asf 802
Cross Fade 806
A2.asf 804

Fig. 8

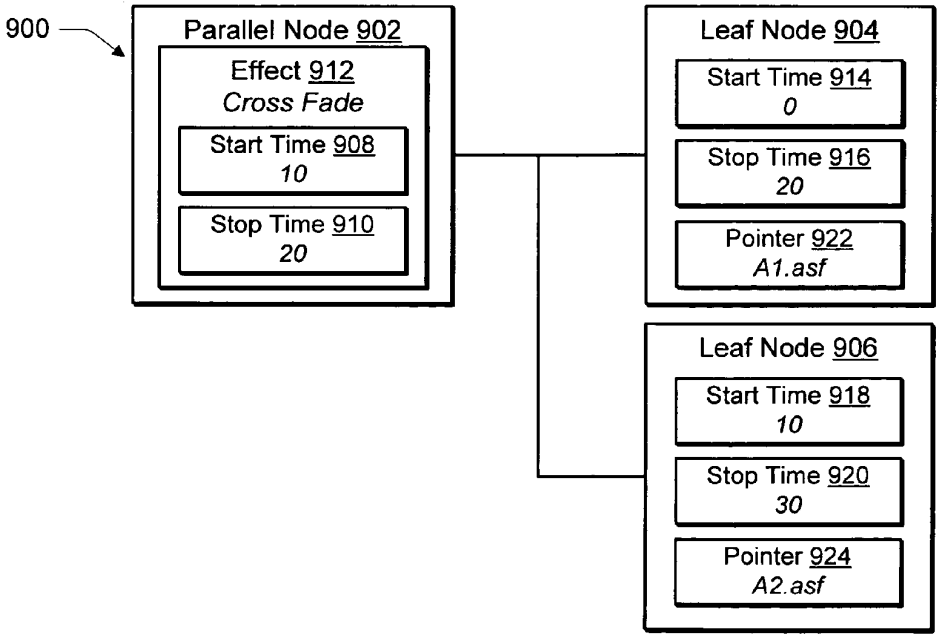
900
Parallel Node 902
Effect 912
Cross Fade
Start Time 908
10
Stop Time 910
20
Leaf Node 904
Start Time 914
0
Stop Time 916
20
Pointer 922
A1.asf
Leaf Node 906
Start Time 918
10
Stop Time 920
30
Pointer 924
A2.asf

Fig. 9

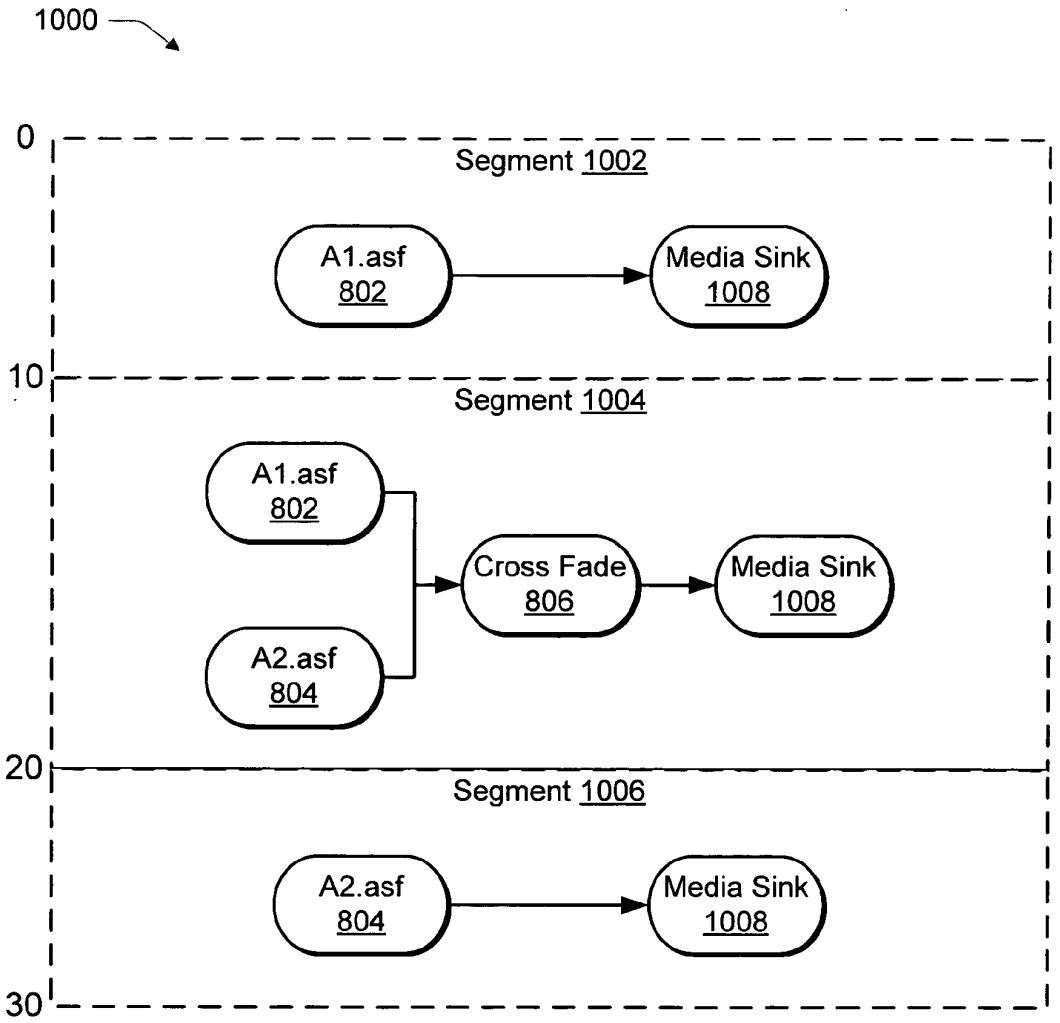
1000
0
Segment 1002
A1.asf
802
Media Sink
1008
10
Segment 1004
A1.asf
802
Cross Fade
806
Media Sink
1008
A2.asf
804
20
Segment 1006
A2.asf
804
Media Sink
1008
30

Fig. 10

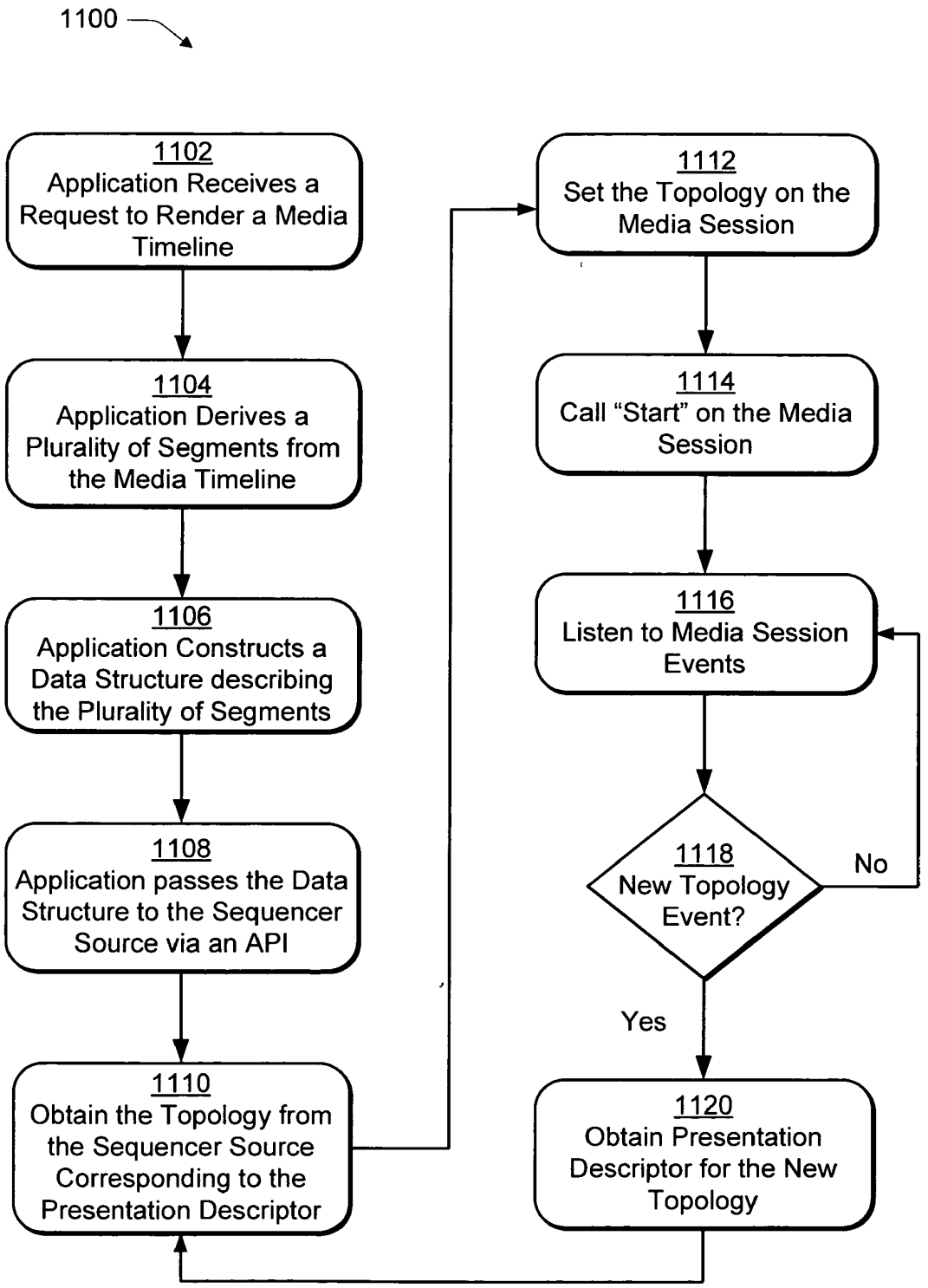
1100
1102
Application Receives a Request to Render a Media Timeline
1104
Application Derives a Plurality of Segments from the Media Timeline
1106
Application Constructs a Data Structure describing the Plurality of Segments
1108
Application passes the Data Structure to the Sequencer Source via an API
1110
Obtain the Topology from the Sequencer Source Corresponding to the Presentation Descriptor
1112
Set the Topology on the Media Session
1114
Call "Start" on the Media Session
1116
Listen to Media Session Events
1118
New Topology Event?
No
Yes
1120
Obtain Presentation Descriptor for the New Topology

Fig. 11

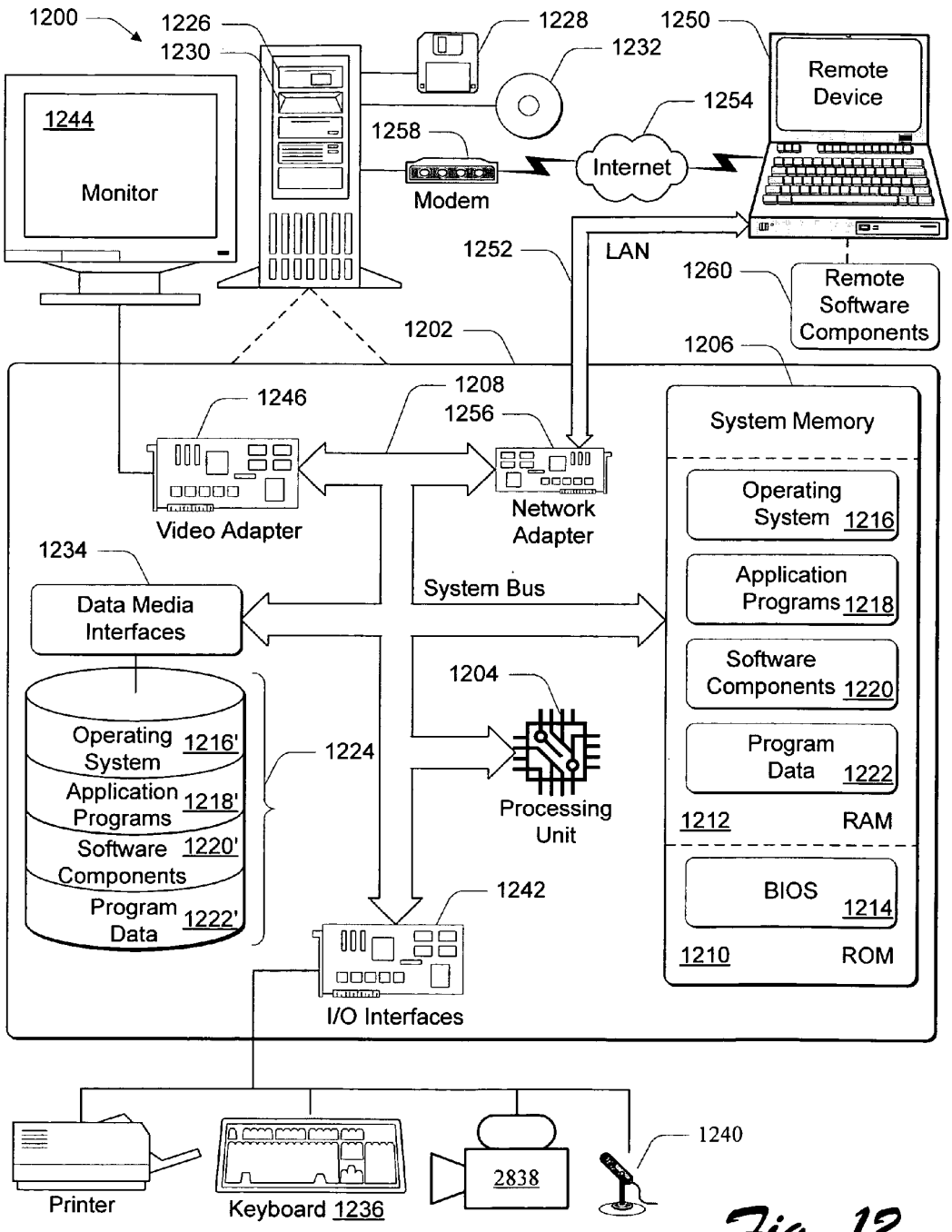
1200
1226
1230
1228
1232
1250
Remote Device
1244
Monitor
1258
Modem
Internet
1254
1252
LAN
1260
Remote Software Components
1202
1206
1246
1208
1256
System Memory
Video Adapter
Network Adapter
Operating System 1216
Application Programs 1218
Software Components 1220
Program Data 1222
1212
RAM
1234
Data Media Interfaces
System Bus
1204
Operating System 1216'
Application Programs 1218'
Software Components 1220'
Program Data 1222'
1224
Processing Unit
BIOS 1214
1210
ROM
1242
I/O Interfaces
Printer
Keyboard 1236
2838
1240

Fig. 12

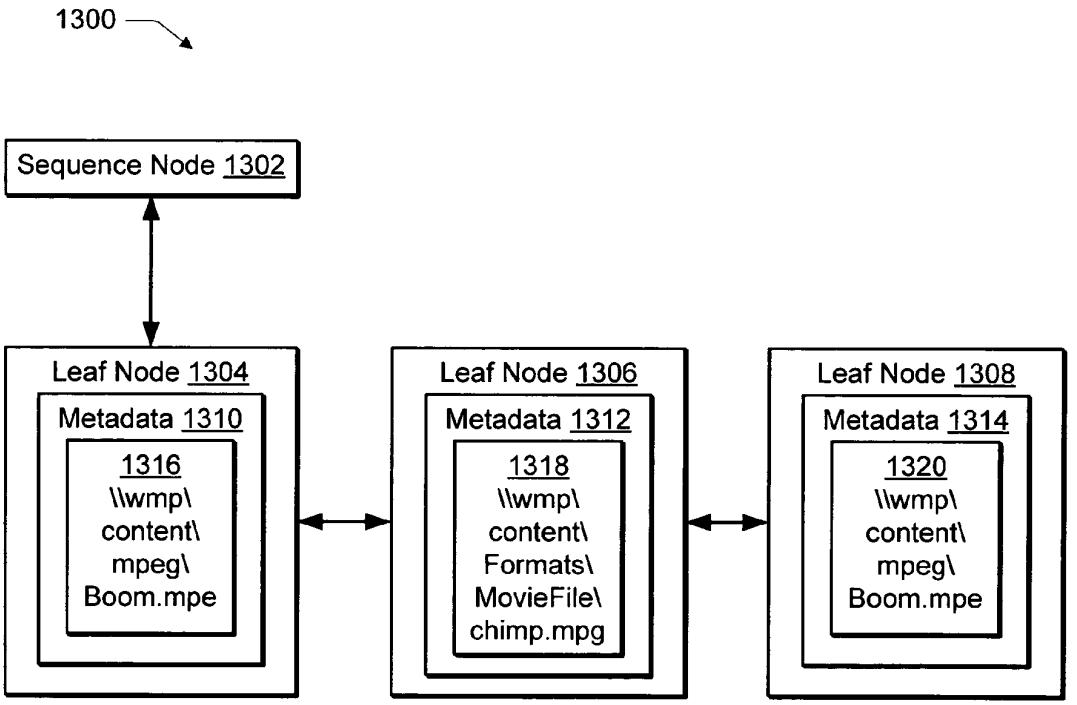
1300
Sequence Node 1302
Leaf Node 1304
Metadata 1310
1316
\\wmp\
content\
mpeg\
Boom.mpe
Leaf Node 1306
Metadata 1312
1318
\\wmp\
content\
Formats\
MovieFile\
chimp.mpg
Leaf Node 1308
Metadata 1314
1320
\\wmp\
content\
mpeg\
Boom.mpe

Fig. 13

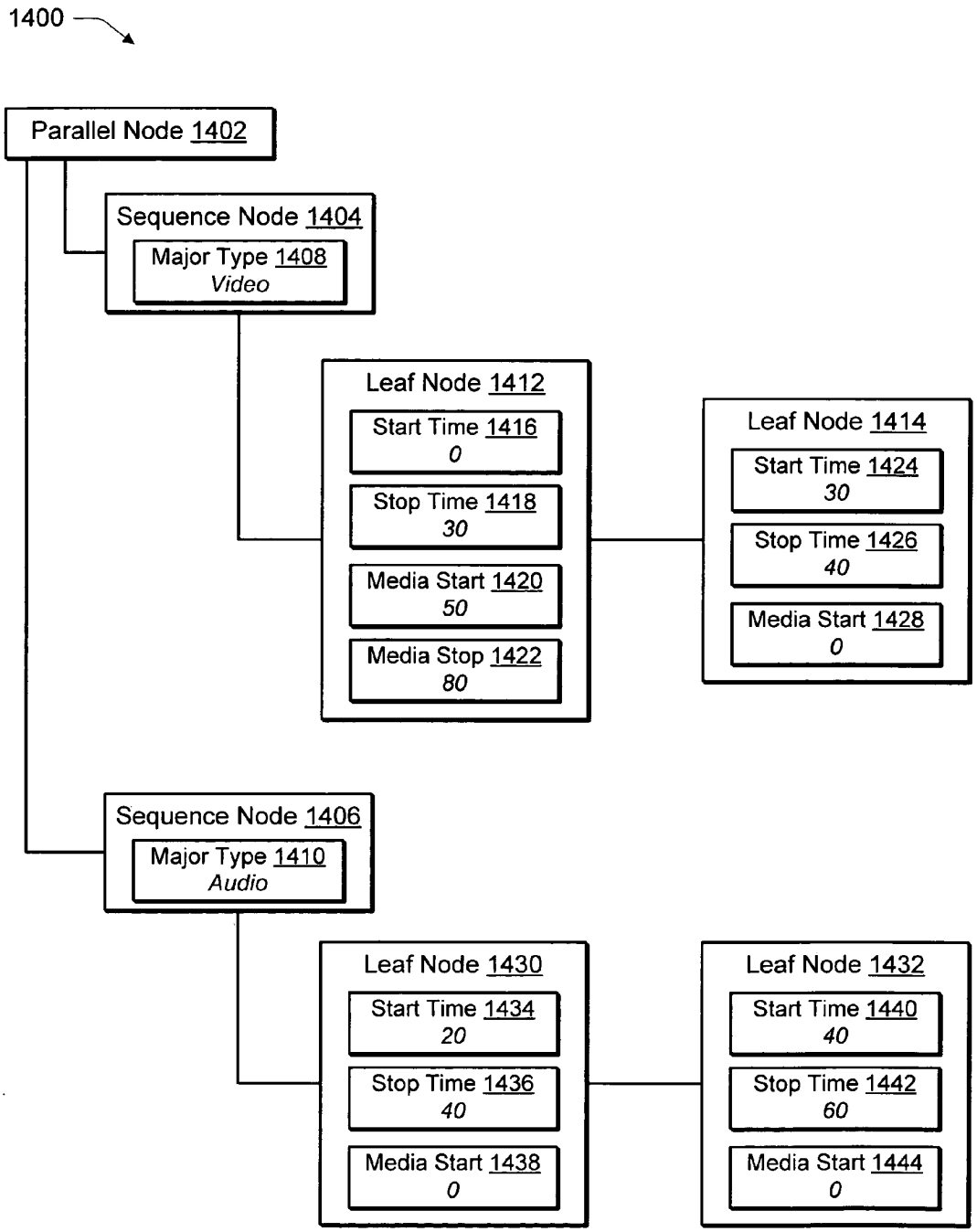
1400
Parallel Node 1402
Sequence Node 1404
Major Type 1408
Video
Leaf Node 1412
Start Time 1416
0
Stop Time 1418
30
Media Start 1420
50
Media Stop 1422
80
Leaf Node 1414
Start Time 1424
30
Stop Time 1426
40
Media Start 1428
0
Sequence Node 1406
Major Type 1410
Audio
Leaf Node 1430
Start Time 1434
20
Stop Time 1436
40
Media Start 1438
0
Leaf Node 1432
Start Time 1440
40
Stop Time 1442
60
Media Start 1444
0

Fig. 14

MEDIA TIMELINE PROCESSING INFRASTRUCTURE

TECHNICAL FIELD

[0001] The present invention generally relates to media, and more particularly relates to a media timeline processing infrastructure.

BACKGROUND

[0002] Users of computers, such as desktop PCs, set-top boxes, personal digital assistants (PDAs), and so on, have access to an ever increasing amount of media from an ever increasing variety of sources. For example, a user may interact with a desktop PC that executes a plurality of applications to provide media for output, such as home videos, songs, slideshow presentations, and so on. The user may also utilize a set-top box to receive traditional television programming that is broadcast to the set-top box over a broadcast network. Additionally, the set-top box may be configured as a personal video recorder (PVR) such that the user may store the broadcast content in memory on the set-top box for later playback. Further, the user may interact with a wireless phone that executes a plurality of applications such that the user may read and send email, play video games, view spreadsheets, and so forth.

[0003] Because of the wide variety of media sources and the wide variety of computers that may be utilized to provide and interact with media, traditional applications and computers were often configured to specifically address each particular type of media. For example, applications that were executed on a video-game console to output video-games were typically configured to provide an output of the applications to a television, and were not configured to provide the output that could be utilized by other computers and other devices. Therefore, presentation of content that was provided by the different media sources, such as computers and/or applications, may involve multiple applications and devices which may be both time and device intensive. Additionally, multiple applications that were executed on the same computer may be configured to specifically address the particular type of media provided by each respective application. For instance, a first audio playback application may be configured to output media configured as songs. A second audio playback application, however, may be configured to record and playback the recordings in an audio format that is not compatible with the first audio playback application, such as an audio-dictation format. Thus, even applications that are configured for execution on the same computer and the same type of media, e.g. audio, may provide media that is incompatible, one to another.

[0004] A timeline provides a way for a user to define a presentation of media. For example, a media player can play a list of songs, which is commonly referred to as a "playlist". Traditional timelines, however, were limited by the wide variety of media sources and the wide variety of computer configurations that may be utilized to provide and interact with media. When desiring the output of different types of media, for instance, each application needed to "understand" each type of media, such as how to render the particular type of media. This may result in an inefficient use of both hardware and software resources of the computer.

[0005] Accordingly, there is a continuing need to provide improved techniques for processing media timelines.

SUMMARY

[0006] A media timeline processing infrastructure is described. In an implementation, a method is described in which an application is executed to derive a plurality of segments from a media timeline. The media timeline references a plurality of media and each of the segments references media to be rendered during a duration of the segment. The application is executed to queue the plurality of segments for rendering by an infrastructure.

[0007] In another implementation, one or more computer readable media include computer executable instructs that, when executed, provide an infrastructure having an application programming interface that is configured to accept a plurality of segments from an application for sequential rendering. Each of the segments reference at least one media item for rendering by the infrastructure and is a segment taken by the application from a media timeline.

BRIEF DESCRIPTION OF THE DRAWINGS

[0008] **FIG. 1** is an illustration of an environment in an exemplary implementation in which a computer provides access to a plurality of media.

[0009] **FIG. 2** is a high level block diagram of a system in an exemplary implementation in which the system, implemented in software, includes an application that interacts with a media foundation to control presentation of a plurality of media.

[0010] **FIG. 3** is an illustration of an exemplary implementation of a system that shows interaction between the application, a sequencer source and a media session of **FIG. 2**.

[0011] **FIG. 4** is an illustration of an exemplary implementation in which a media timeline is shown as a tree that includes a plurality of nodes that provide for an output of media for a presentation.

[0012] **FIG. 5** is an illustration of an exemplary implementation showing a sequence node and a plurality of leaf nodes that are children of the sequence node.

[0013] **FIG. 6** is an illustration of an exemplary implementation showing a parallel node and a plurality of leaf nodes that are children of the parallel node.

[0014] **FIG. 7** is a flow diagram depicting a procedure in an exemplary implementation in which an application interacts with a media session and a sequencer source to cause a media timeline configured as a playlist to be rendered.

[0015] **FIG. 8** is an illustration of an exemplary implementation showing an output of first and second media over a specified time period that utilizes an effect to transition between the first and second media.

[0016] **FIG. 9** is an illustration of a media timeline in an exemplary implementation that is suitable to implement a cross fade effect of **FIG. 8**.

[0017] **FIG. 10** is an illustration of an exemplary implementation showing a plurality of segments derived from the media timeline of **FIG. 9** by an application for rendering by the media timeline processing infrastructure.

[0018] **FIG. 11** is a flow diagram depicting a procedure in an exemplary implementation in which an application seg-

ments a media timeline into a plurality of topologies for rendering by the media timeline processing infrastructure.

[0019] **FIG. 12** is an illustration of an exemplary operating environment.

[0020] **FIG. 13** is an illustration of an exemplary implementation showing a media timeline that includes a sequence node and three leaf nodes described by a Windows® Media Player Playlist file identified by an ASX file extension.

[0021] **FIG. 14** is an illustration of an exemplary implementation showing a media timeline that includes a parallel node having two child sequence nodes that are described by an eXecutable Temporal Language (XTL) file.

[0022] The same numbers are used throughout the disclosure and figures to reference like components and features.

DETAILED DESCRIPTION

[0023] Overview

[0024] A media timeline processing infrastructure is described. A media timeline provides a technique for a user to define a presentation based on media, such as already existing media (e.g., stored media such as video, songs, documents, and so on) and/or media that is output in "real-time" from a media source, such as streaming audio and/or video. The media timeline may be utilized to express groupings and/or combinations of media and provide compositional metadata utilized by media timeline processing infrastructure that executes, e.g. renders, the media referenced by the media timeline to provide a final presentation.

[0025] Different multimedia applications may have different media timeline object models for dealing with collections of media. For example, a media player may use a playlist in order to play media in sequence. On the other hand, an editing application may use a media timeline configured as a storyboard to edit a presentation of the media. Yet another application may utilize an event based timeline, where media playback jumps between items based on certain events. Accordingly, a wide variety of media timeline object models may be encountered which are different, one to another, such that each application may have its own custom media timeline solution.

[0026] In an implementation, a media timeline processing infrastructure is described which provides "base level" support for applications such that the applications may render the media timelines which are particular to the application. For example, the media timeline processing infrastructure may be configured to allow an application to queue media segment which does not change over a period of time but have the infrastructure itself "figure out" how to render the segment. In another example, the media timeline processing infrastructure is configured to allow an application to cancel or update segments "on the fly" during rendering of the segment, with the infrastructure handling all the nuances of updating the rendering of the segment as needed. Thus, an application in contact with the media timeline processing infrastructure need only concentrate on the specifics of the particular media timeline object model for that application by translating the media timeline into a sequence of segments which are understood by the media timeline processing infrastructure.

[0027] In the following discussion, an exemplary environment is first described which is operable to employ the media timeline processing infrastructure. Exemplary procedures are then described which are operable in the exemplary environment, as well as in other environments.

[0028] Exemplary Environment

[0029] **FIG. 1** is an illustration of an environment **100** in an exemplary implementation in which a computer **102** provides access to a plurality of media. The computer **102**, as illustrated, is configured as a personal computer (PC). The computer **102** may also assume a variety of other configurations, such as a mobile station, an entertainment appliance, a set-top box communicatively coupled to a display device, a wireless phone, a video game console, a personal digital assistant (PDA), and so forth. Thus, the computer **102** may range from a full resource device with substantial memory and processor resources (e.g., PCs, television recorders equipped with hard disk) to a low-resource device with limited memory and/or processing resources (e.g., a traditional set-top box). An additional implementation of the computer **102** is described in relation to **FIG. 12**.

[0030] The computer **102** may obtain a variety of media from a variety of media sources. For example, the computer **102** may locally store a plurality of media **104(1)**, . . . , **104**(*k*), . . . , **104**(K). The plurality of media **104(1)-104**(K) may include an assortment of audio and video content having various formats, such as WMV, WMA, MPEG 1, MPEG 2, MP3, and so on. Further, the media **104(1)-104**(K) may be obtained from a variety of sources, such as from an input device, from execution of an application, and so on.

[0031] The computer **102**, for instance, may include a plurality of applications **106(1)**, . . . , **106**(*n*), . . . , **106**(N). One or more of the plurality of applications **106(1)-106**(N) may be executed to provide media, such as documents, spreadsheets, video, audio, and so on. Additionally, one or more of the plurality of applications **106(1)-106**(N) may be configured to provide media interaction, such as encoding, editing, and/or playback of the media **104(1)-104**(K).

[0032] The computer **102** may also include a plurality of input devices **108(1)**, . . . , **108**(*m*), . . . , **108**(M). One or more of the plurality of input devices **108(1)-108**(M) may be configured to provide media for input to the computer **102**. Input device **108(1)**, for instance, is illustrated as a microphone that is configured to provide an input of audio data, such as a voice of the user, a song at a concert, and so on. The plurality of input devices **108(1)-108**(M) may also be configured for interaction by a user to provide inputs that control execution of the plurality of applications **106(1)-106**(N). For example, input device **108(1)** may be utilized to input voice commands from the user, such as to initiate execution of a particular one of the plurality of applications **106(1)-106**(N), control execution of the plurality of applications **106(1)-106**(N), and so forth. In another example, input device **108**(*m*) is illustrated as a keyboard that is configured to provide inputs to control the computer **102**, such as to adjust the settings of the computer **102**.

[0033] Further, the computer **102** may include a plurality of output devices **110(1)**, . . . , **110**(*j*), . . . , **110**(J). The output devices **110(1)-110**(J) may be configured to render media **104(1)-104**(K) for output to the user. For instance, output device **110(1)** is illustrated as a speaker for rendering audio

data. Output device **110**(*j*) is illustrated as a display device, such as a television, that is configured to render audio and/or video data. Thus, one or more of the plurality of media **104**(**1**)-**104**(K) may be provided by the input devices **108**(**1**)-**108**(M) and stored locally by the computer **102**. Although the plurality of input and output devices **108**(**1**)-**108**(M), **110**(**1**)-**110**(J) are illustrated separately, one or more of the input and output devices **108**(**1**)-**108**(M), **110**(**1**)-**110**(J) may be combined into a single device, such as a television having buttons for input, a display device, and a speaker.

[**0034**] The computer **102** may also be configured to communicate over a network **112** to obtain media that is available remotely over the network **112**. The network **112** is illustrated as the Internet, and may include a variety of other networks, such as an intranet, a wired or wireless telephone network, a broadcast network, and other wide area networks. A remote computer **114** is communicatively coupled to the network **112** such that the remote computer **114** may provide media to the computer **102**. For example, the remote computer **114** may include one or more applications and a video camera **116** that provides media, such as home movies. The remote computer **114** may also include an output device to output media, such as the display device **118** as illustrated. The media obtained by the computer **102** from the remote computer **114** over the network **112** may be stored locally with the media **104**(**1**)-**104**(K). In other words, media **104**(**1**)-**104**(K) may include locally stored copies of media obtained from the remote computer **114** over the network **112**.

[**0035**] Thus, the computer **102** may obtain and store a plurality of media **104**(**1**)-**104**(K) that may be provided both locally (e.g., through execution of the plurality of applications **106**(**1**)-**106**(N) and/or use of the plurality of input device **108**(**1**)-**108**(M)), and remotely from the remote computer **114** (e.g., through execution of application and/or use of input devices). Although the plurality of media **104**(**1**)-**104**(K) has been described as stored on the computer **102**, the media **104**(**1**)-**104**(K) may also be provided in "real-time". For example, audio data may be streamed from the input device **108**(**1**), which is illustrated as a microphone, without storing the audio data.

[**0036**] The computer **102** is illustrated as including a media timeline **120**. As previously described, the media timeline **120** provides a technique for a user to define a presentation of stored and/or real-time media from the plurality of media sources. For example, the media timeline **120** may describe a collection of media that was obtained from the input devices **108**(**1**)-**108**(M), the applications **106**(**1**)-**106**(N), and/or the remote computer **114**. The user, for instance, may utilize one or more of the input devices **108**(**1**)-**108**(M) to interact with the application **106**(*n*) to define groupings and/or combinations of the media **104**(**1**)-**104**(K). The user may also define an order and effects for presentation of the media **104**(**1**)-**104**(K). A sequencer source **122** may then be executed on the computer **102** to render the media timeline **120**. The media timeline **120**, when rendered, provides the expressed groupings and/or combinations of the media **104**(**1**)-**104**(K) for rendering by one or more of the plurality of output devices **110**(**1**)-**110**(J). Further discussion of execution of the sequencer source **122** may be found in relation to the following figures.

[**0037**] **FIG. 2** is a high level block diagram of a system **200** in an exemplary implementation in which the system **200**, implemented in software, includes an application **202** that interacts with a media foundation **204** to control presentation of a plurality of media **206**(*g*), where "g" can be any number from one to "G". The media foundation **204** may be included as a part of an operating system to provide playback of the media **206**(*g*) such that applications that interact with the operating system may control playback of the media **206**(*g*) without "knowing" the particular details of how the media is rendered. Thus, the media foundation **204** may provide a portion of a media timeline processing infrastructure to process a media timeline **120** of the application **202** The media **206**(*g*) may be provided from a variety of sources, such as from the media **104**(**1**)-**104**(K) of **FIG. 1**, through execution of the applications **106**(**1**)-**106**(N), use of the input devices **108**(**1**)-**108**(M), output devices **110**(**1**)-**100**(J), and so on.

[**0038**] The application **202**, which may be the same as or different from applications **106**(**1**)-**106**(N) of **FIG. 1**, interacts with a media engine **208** to control the media **104**(**1**)-**104**(K). In at least some embodiments, the media engine **208** serves as a central focal point of the application **202** that desires to somehow participate in a presentation. A presentation, as used in this document, refers to or describes the handling of media. In the illustrated and described embodiment, a presentation is used to describe the format of the data on which the media engine **208** is to perform an operation. Thus, a presentation can result in visually and/or audibly presenting media, such as a multimedia presentation in which both audio and accompanying video is presented to user within a window rendered on a display device, such as output device **110**(*j*) of **FIG. 1** that is illustrated as a display device that may be associated with a desktop PC. A presentation can also result in writing media content to a computer-readable medium such as a disk file. Thus, a presentation is not limited to scenarios in which multimedia content is rendered on a computer. In some embodiments, operations such as decoding, encoding and various transforms (such as transitions, effects and the like), can take place as a result of a presentation.

[**0039**] In an embodiment, the media foundation **204** exposes one or more application program interfaces that can be called by the application **202** to render the media **206**(*g*). For example, the media foundation **204** may be thought of as existing at an "infrastructure" level of software that is executed on the computer **102** of **FIG. 1**. In other words, the media foundation **204** is a software layer used by the application **202** to present the media **206**(*g*). Thus, the media foundation **204** may be utilized such that each application **202** does not have to implement separate code for each type of media **206**(*g*) that may be used in the system **200**. In this way, the media foundation **204** provides a set of reusable software components to do media specific tasks.

[**0040**] The media foundation **204** may utilize several components among which include the sequencer source **122**, a media source **210**, a media processor **212**, a media session **214**, the media engine **208**, a source resolver **216**, one or more transforms **218**, one or more media sinks **220**, **222**, and so on. One advantage of various illustrated and described embodiments is that the system **200** is a pluggable model in the sense that a variety of different kinds of components can be utilized in connection with the systems described herein. Also included as a part of system **200** is a destination **224**, which is discussed in more detail below. In at least one

embodiment, however, the destination **224** is an object that defines where a presentation is to be presented (e.g. a window, disk file, and the like) and what happens to the presentation. That is, the destination may correspond to one or more of the media sinks **220**, **222** into which data flows.

[**0041**] The media timeline **120** is illustrated as a part of the application **202**. The media timeline **120** may be configured in a variety of ways to express how a plurality of media is to be rendered. For example, the media timeline may employ an object model which provides a way for a user of the application **202** to define a presentation based on media that is rendered by the media foundation **204**. The media timeline **120**, for instance, may range from a sequential list of media files to more complex forms. For example, the media timeline **120** may employ file structures, such as SMIL and AAF, to express media playback experiences that include transitions between media, effects, and so on. The application **202**, for instance, may be configured as a media player that can play a list of songs, which is commonly referred to as a playlist. As another example, in an editing system a user may overlay one video over the other, clip a media, add effect to the media and so forth. Such groupings or combinations of media may be expressed using the media timeline **120**. Further discussion of the media timeline **120** is found beginning in relation to **FIG. 4**.

[**0042**] The media source **210** is utilized to abstract a provider of media. The media source **210**, for instance, may be configured to read a particular type of media from a particular source. For example, one type of media source might capture video from the outside world (e.g., a camera), and another might capture audio (e.g., a microphone). Alternately or additionally, the media source **210** may read a compressed data stream from disk and separate the data stream into its compressed video and compressed audio components. Yet another media source **210** might obtain data from the network **112** of **FIG. 1**. Thus, the media source **210** may be utilized to provide a consistent interface to acquire media.

[**0043**] The media source **210** provides one or more media presentation **226** objects (media presentation). The media presentation **226** abstracts a description of a related set of media streams. For example, the media presentation **226** may provide a paired audio and video stream for a movie. Additionally, the media presentation **226** may describe the configuration of the media source **210** at a given point in time. The media presentation **226**, for instance, may contain information about the media source **210** including descriptions of the available streams of the media source **210** and their media types, e.g. audio, video, MPEG, and so on.

[**0044**] The media source **210** may also provide a media stream **228** object (media stream) which may represent a single stream from the media source **210** which can be accessed by the application **202**, i.e. exposed to the application **202**. The media stream **228** thus allows the application **202** to retrieve samples of the media **206**(*g*). In an implementation, the media stream **228** is configured to provide a single media type, while the sequencer source **122** may be utilized to provide multiple media types, further discussion of which may be found in relation to **FIG. 3**. A media source can provide more than one media stream. For example, a wmv file can have both audio and video in the same file. The media source for this file will therefore provide two streams, one for audio and the other for video. In the media foundation **204**, therefore, the media source **210** represents a software component which outputs samples for a presentation.

[**0045**] The sequencer source **122** is configured to receive segments from the application **202**, which then queues the segments on the media session **214** to cause the segments to be rendered. Thus, the sequencer source **122** may be utilized to hide the intricacies of rendering the media timeline **120** to provide media described by the media timeline **120** from other components of the media foundation **204**.

[**0046**] The segments received by the sequencer source **122**, for instance, may be utilized to create a topology **230** from segments received by the application **202**. The topology **230** defines how data flows through various components for a given presentation. A "full" topology includes each of the components, e.g. software modules, used to manipulate the data such that the data flows with the correct format conversions between different components. The sequencer source **122** interacts with the media session **214**, which handles "switching" between consecutive topologies for rendering by the media processor **212**. For example, the sequencer source **122** may "queue" the topology **230** on the media session **214** for rendering. Further discussion of the interaction of the sequencer source **122**, application **202** and the media session **214** may be found in relation to **FIG. 3**.

[**0047**] When a topology is created, the user might choose to create it partially. This partial topology is not sufficient, by itself however, to provide a final presentation. Therefore, a component called the topology loader **232** may take the partial topology and convert it into a full topology by adding the appropriate data conversion transforms between the components in the partial topology.

[**0048**] In the topology **230**, for example, data generally originates at the media source **210**, flows through one or more transforms **218**, and proceeds into one or more media sinks **220**, **222**. Transforms **218** can include any suitable data handling components that are typically used in presentations. Such components can include those that uncompress compressed data and/or operate on data in some way, such as by imparting an effect to the data, as will be appreciated by the skilled artisan. For example, for video data, transforms can include those that affect brightness, color conversion, and resizing. For audio data, transforms can include those that affect reverberation and re-sampling. Additionally, decoding and encoding can be done by transforms.

[**0049**] Media sinks **220**, **222** are typically associated with a particular type of media content. Thus, audio content might have an associated audio sink such as an audio renderer. Likewise, video content might have an associated video sink such as a video renderer. Additional media sinks can send data to such things as computer-readable media, e.g. a disk file and the like, stream the data over the network, such as broadcasting a radio program, and so on.

[**0050**] The media session **214** is a component which may schedule multiple presentations. Therefore, the media processor **212** may be used to drive a given presentation, and the media session **214** utilized to schedule multiple presentations. The media session **214**, for instance, may change topologies that are rendered by the media processor **212** as previously described. For example, the media session **214**

may change from a first topology that is rendered on the media processor **212** to a second topology such that there is no gap between the renderings of samples from the consecutive presentations that are described by the respective topologies. Thus, the media session **214** may provide a seamless user experience as the playback of the media moves from one presentation to another.

[**0051**] The source resolver **216** component may be utilized to create a media source **210** from URLs and/or byte stream objects. The source resolver **216** may provide both synchronous and asynchronous ways of creating the media source **210** without requiring prior knowledge about the form of data produced by the specified resource.

[**0052**] In at least one embodiment, the media foundation **204** is utilized to abstract away the specific details of the existence of and interactions between various components of the media foundation **204**. That is, in some embodiments, the components that are seen to reside inside the media foundation **204** are not visible, in a programmatic sense, to the application **202**. This permits the media foundation **204** to execute so-called "black box" sessions. For example, the media engine **208** can interact with the media session **214** by providing the media session certain data, such as information associated with the media (e.g. a URL) and the destination **224**, and can forward the application's **202** commands (e.g. open, start, stop and the like) to the media session **214**. The media session **214** then takes the provided information and creates an appropriate presentation using the appropriate destination. Thus, the media foundation **204** may expose a plurality of software components that provide media functionality over an application programming interface for use by the application **202**.

[**0053**] The sequencer source **122** may also be utilized to write media sources for specific timeline object models. For example, if a movie player has a proprietary file format which is used to represent its timeline, the movie player may use the sequencer source **122** to create a "stand alone" media source which will render its presentation to the media foundation **204**. Therefore, an application which uses media foundation **204** may then play the movie player's file directly as it plays any other media file.

[**0054**] Additionally, the media foundation **204** allows 3rd parties to register a particular file type based on its extension, scheme, header, and so on. For instance, the 3rd party may register an object called a "byte stream plug-in" which understands the file format. Therefore, when a file of this particular format is found it creates the registered byte stream plug-in and asks it to create a media source which can source media samples from the file. Continuing with the previous example, the movie player may register a byte stream plug-in for its particular file type. When this byte stream plug-in is invoked, it may parse the media timeline and "figure out" the topologies which form the presentation. The plug-in may then queue the topologies on the sequencer source and rely on the sequencer source to playback the topologies back-to-back. To the application **202**, it looks like any other media source for a file was given to the media foundation **204** and is played back just as a normal audio or video file.

[**0055**] **FIG. 3** is an illustration of an exemplary implementation of a system **300** that shows interaction between the application **202**, sequencer source **122** and media session **214** of **FIG. 2**. As illustrated in **FIG. 3**, the application **202** may be in contact with both the sequencer source **122** and the media session **214** to cause the media timeline **120** to be rendered.

[**0056**] The arrows of the system depict how data, control and status flow between the components of the system **300**. For example, the application **202** is illustrated as being in contact with the media session **214**. Arrow **302** represents communication of control information from the application **202** to the media session **214** through an application programming interface. A variety of control information may be communicated by the application **202** to the media session **214**, such as to "set" a topology on the media session **214**, call "start" to initiate rendering of a set topology, call "stop" to terminate rendering of the set topology, and so on. Arrow **304** represents the flow of status information from the media session **214** to the application **202**, such as acknowledging that a topology has been set, "start" or "stop" calls have been implemented, current status of rendering of a topology by the media session **214**, and so forth.

[**0057**] The application **202** is also illustrated as being in contact with the sequencer source **122**. Arrow **306** represents communication of partial topologies from the application **202** to the sequencer source **122** and arrow **308** represent communication of status information from the sequencer source **122** to the application **202**. As previously described, for instance, the application **202** may segment the media timeline **120** and queue the segments to the sequencer source **122** for rendering. The sequencer source **122** may then fire out events to notify the media processor and the media session that new presentations are available for rendering. These presentations are then picked up by the session, resolved, and queued up to be given to the processor once the rendering of the current presentation is completed, further discussion of which may be found in relation to **FIG. 4**.

[**0058**] The sequencer source **122** may also be viewed as a media source by the media session **214**. For example, the sequencer source **122** may set a topology on the media session **214** which specifies that the source of the media is the sequencer source **122**. The sequencer source **122** may then aggregate media from a plurality of media sources (e.g., media sources **210(1)**, **210(2)**) and provide the media from the media sources to the media processor **212**. In an implementation, the sequencer source **122** may aggregate media of different types and have that media appear as a single media source. For example, the samples may flow directly from the media sources **210(1)**, **210(2)** to the media processor, and from the media process to the media session to be given to bit pumps, which is illustrated by arrows **310-314**. The sequencer source **122** may timestamp samples received by the media sources **210(1)**, **210(2)** and provide these samples to the media processor **212** for concurrent rendering. The sequencer source **122** may also control the operation of the media sources, **210(1)**, **210(2)**, which is illustrated in **FIG. 3** by arrows **316**, **318**, respectively. A variety of other examples are also contemplated.

[**0059**] The media session **214** may also be executed to control operation of the sequencer source **122**, which is illustrated by arrow **320** as a flow of control information from the media session **214** to the sequencer source **122**. For example, the media session **214** may receive a "start" call to

begin rendering a topology. The topology may specify that the sequencer source **122** as a media source in the topology. Therefore, the media processor **212**, when rendering the topology, may call "start" on the sequencer source **122** to provide the samples represented in the topology. In this instance, the sequencer source **122** also calls "start" on the media sources **210(1)**, **210(2)** and thereafter provides aggregated and time stamped samples back to the media session **214**. Thus, in this instance the media session **214** is not "aware" that the sequencer source **122** is providing samples from a plurality of other media sources. Further discussion of media timeline **120** rendering may be found in relation to **FIG. 7** after discussion of a variety of exemplary media timelines that may be processed using the infrastructure.

[**0060**] Media Timelines

[**0061**] **FIG. 4** is an illustration of an exemplary implementation in which a media timeline **400** is shown as a tree that includes a plurality of nodes that describe an output of media for a presentation. The media timeline **400**, which may or may not correspond to the media timeline **120** of **FIGS. 1 and 2**, is structured as a tree that includes a plurality of nodes **402-412**. Each of the plurality of nodes **402-412** includes respective metadata **414-422** that describes various attributes and behaviors for the node and/or "children" of that particular node. For example, node **404** and node **406** are arranged, respectively, as a "parent" and "child". Node **404** includes metadata **416** that describes behaviors and attributes of that node **404**. The metadata **416** may also describe each of the "child" nodes **406**, **408**, such as a rendering order of the nodes **406**, **408**.

[**0062**] In an implementation, the media timeline **400** is not executable by itself to make decisions about a user interface (UI), playback or editing. Instead, the metadata **414-424** on the media timeline **400** is interpreted by the application **202**. For example, the media timeline **400** may include one or more proprietary techniques to define presentation of the media referenced by the timeline. The application **202** may be configured to utilize these proprietary techniques to determine a "playback order" of the media, further discussion of which may be found in relation to **FIGS. 7-11**.

[**0063**] The nodes **402-412**, as positioned on the media timeline **400**, describe a basic layout of the media timeline **400**. This layout may be utilized for displaying a timeline structure. For instance, various types of nodes **402-412** may be provided such that a desired layout is achieved. The node type indicates how the children of that node are interpreted, such as a root node **402** and leaf nodes **408-412**. The root node **402** in this instance specifies a starting point for rendering the metadata timeline **400** and includes metadata **414** that describes how rendering is to be initiated.

[**0064**] In the illustrated implementation of **FIG. 4**, the leaf nodes **408**, **410**, **412** of the media timeline **120** directly map to media. For example, the leaf nodes **408**, **410**, **412** may have respective metadata **420**, **422**, **424** that describes how to retrieve the media that each of the leaf nodes **408-412** represent. A leaf node may specify a path for an audio and/or video file, point to a component which generates video frames programmatically during rendering of the media timeline **400**, and so on. Leaf node **408**, for instance, includes metadata **420** having a pointer **426** that maps to input device **108(1)** that is configured as a microphone. Leaf node **410** includes metadata **422** having a pointer **428** that maps to an address of the media **430** in a storage device **432** that is included locally on the computer **102** of **FIG. 1**. Leaf node **412** includes metadata **424** having a pointer **434** that maps to a network address of the remote computer **114** on the network **112**. The remote computer **114** includes the video camera **116** to provide media over the network **112** to the computer **102** of **FIG. 1**. Thus, in this implementation, the timeline **400** does not include the actual media, but rather references the media by using pointers **426**, **428**, **434** that describe where and/or how to locate the referenced media.

[**0065**] Nodes **404**, **406** may also describe additional nodes of the media timeline **400**. For example, node **404** may be utilized to describe the order of execution for nodes **406**, **408**. In other words, node **404** acts as a "junction-type" node to provide ordering and further description of its "children". There are a variety of junction-type nodes that may be utilized in the media timeline **400**, such as a sequence node and a parallel node. **FIGS. 5-6** describe exemplary semantics behind the sequence and parallel nodes.

[**0066**] **FIG. 5** is an illustration of an exemplary implementation **500** in which a sequence node **502** and a plurality of leaf nodes **504**, **506**, **508** that are children of the sequence node **502** are shown. The children of the sequence node **502** are rendered one after the other. Additionally, the sequence node **502** may include metadata **510** that describes a rendering order of the plurality of leaf nodes **504-508**. As illustrated, leaf node **504** is rendered first, followed by leaf node **506**, which is followed by leaf node **508**. Each leaf node **504-508** includes respective metadata **512**, **514**, **516** having respective pointers **518**, **520**, **522** to respective media **524**, **526**, **528**. Thus, the sequence node **502** may represent the functionality of a linear playlist of files.

[**0067**] Although the child nodes of the sequence node **502** are configured as leaf nodes in this implementation, child nodes of the sequence node **502** may represent any other type of node. For example, child nodes may be utilized to provide a complex tree structure as shown in **FIG. 4**. Node **406** of **FIG. 4**, for instance, is the child of another junction-type node, i.e. node **404**.

[**0068**] **FIG. 6** is an illustration of an exemplary implementation **600** in which a parallel node **602** includes metadata **604** specifying a plurality of leaf nodes **606**, **608** that are children of the parallel node **602** are shown. In the previous implementation that was described in relation to **FIG. 5**, sequence nodes were discussed in which nodes that are children of the sequence node were rendered, one after another. To provide rendering of nodes at the same time, the parallel node **602** may be employed.

[**0069**] The children of the parallel node **602** may be rendered simultaneously. For example, leaf node **606** and leaf node **608** are children of parallel node **602**. Each of the leaf nodes **606**, **608** includes respective metadata **610**, **612** having respective pointers **614**, **616** to respective media **618**, **620**. Each of the leaf nodes **606**, **608** includes a respective time **622**, **624** included in the respective metadata **610**, **612** that specifies when the respective leaf nodes **606**, **608** are to be rendered. The times **622**, **624** on the leaf nodes **606**, **608** are relative to the parallel node **602**, i.e. the parent node. Each of the child nodes can represent any other type of node and combinations of nodes, providing for a complex tree structure with combined functionality. For example, a "junction" type node may also reference media, and so forth.

Although metadata including time data has been described, a variety of metadata may be included on nodes of the media timeline, an example of which is described in the following implementation.

[0070] Although a few examples of media timelines were described in relation to **FIGS. 4-6**, a variety of other media timelines may be processed utilizing the described infrastructure without departing from the spirit and scope thereof.

[0071] Exemplary Procedures

[0072] The following discussion describes processing techniques that may be implemented utilizing the previously described systems and devices. Aspects of each of the procedures may be implemented in hardware, firmware, or software, or a combination thereof. The procedures are shown as a set of blocks that specify operations performed by one or more devices and are not necessarily limited to the orders shown for performing the operations by the respective blocks. In portions of the following discussion, reference will be made to the environment, systems and timelines of **FIGS. 1-6**.

[0073] **FIG. 7** is a flow diagram depicting a procedure **700** in an exemplary implementation in which an application interacts with a media session and a sequencer source to cause a media timeline configured as a playlist to be rendered. An application creates a sequencer source (block **702**) and a media session (block **704**). For example, the application may make a "create" call to an API of the media foundation **204**.

[0074] The application creates a partial topology for each segment of a media timeline (block **706**). For example, in this implementation the media timeline is configured as a playlist, which may be represented by the media timeline **500** of **FIG. 5** which includes a sequence node **502** and a plurality of leaf nodes **504-508**. As previously described each of the leaf nodes **504**, **506**, **508** includes a respective pointer **518**, **520**, **522** which references a respective media item **524**, **526**, **528**.

[0075] The application then creates a partial topology for one or more leaf nodes of the sequence node of the media timeline (block **706**). In this embodiment, for instance, the media timeline **120** is a playlist which references media that is to be played in sequence, one media item after another. Therefore, each leaf node is the media timeline **120** represents a partial topology for playback of the media timeline. In another example, if the timeline specifies a cross fade between two left nodes, there will be topologies where both leaf nodes are used during the cross fade. In a first example, an effect can be specified for a small duration of the leaf node. For instance, if the leaf node represents media which is 10 seconds long and the timeline specifies a fadeout effect on the last five seconds of the leaf node, then this will result in two topologies, the first one does not include the effect and the second one does.

[0076] The application queues the topologies on the sequencer source (block **708**) and the last topology is marked as the "end" (block **710**). For example, a flag may be set on the last topology such that the sequencer source ends playback after that "flagged" topology is rendered.

[0077] A presentation descriptor is then created from the sequencer source (block **712**). The presentation descriptor describes the media stream objects (hereinafter "media streams") which are to be rendered. As previously described, media streams are objects which produce/receive media samples. A media source object may produce one or more media streams. Accordingly, the presentation descriptor may describe the nature of these streams, such as location of the streams, formats, and so on.

[0078] The application then obtains the topology from the sequencer source which corresponds to the presentation descriptor (block **714**). For example, the application may communicate the presentation descriptor to the sequencer source and receive a topology corresponding to the presentation descriptor. In another example, the sequencer source may "set" the topology on the media session. In addition, the obtained topology may be configured in a variety of ways. For example, the obtained topology may be a partial topology that is resolved into a full topology by the topology loader **232** of **FIG. 2**. In another example, the sequencer source **122** may incorporate the functionality of the topology loader to resolve the partial topology to a full topology, which is then obtained by the media session **214**. A variety of other examples are also contemplated.

[0079] The topology is then set on the media session (block **716**). For example, the media session **214** may include a queue for topologies such that the topologies may be rendered in sequence, one after the other, without encountering a "gap" between the rendering of the topologies. Therefore, the application may call the media session to "set" a first one of the queued topologies to be rendered and call "start" on the media session to begin the rendering (block **718**).

[0080] During the rendering, the application may "listen" for media session events (block **720**). For example, the application **202** may receive status events from the media session **214** as illustrated by arrow **304** of **FIG. 3**. The application may then determine if a "new topology" event is received (decision block **722**). If not ("no" from decision block **722**), the application may continue "listening" to the events.

[0081] When a "new topology" event is received ("yes" from decision block **722**), a presentation descriptor is obtained for the new topology (block **724**). The topology from the sequencer source is obtained which corresponds to the presentation descriptor (block **714**) and a portion (blocks **714**, **716**, **720-724**) of the procedure **700** is repeated for the new topology. In this way, the application **202**, sequencer source **122** and media session **214** may provide a sequential playback of a playlist. In some instances, however, parallel rendering is described which involves multiple media sources and complex topologies. Similar functionality may be employed in such an instance, further discussion of which may be found in relation to the following figures.

[0082] **FIG. 8** is an illustration of an exemplary implementation showing an output **800** of first and second media over a specified time period that utilizes an effect to transition between the first and second media. In the illustrated example, A**1**.asf **802** and A**2**.asf **804** are two different audio files. A**1**.asf **802** has an output length 20 seconds and A**2**.asf **804** also has an output length 20 seconds. A cross fade **806** effect is defined between the outputs of A**1**.asf **802** and A**2**.asf **804**. In other words, the cross fade **806** is defined to transition from the output of A**1**.asf **802** to the output of

A2.asf **804**. The cross fade **806** effect is initiated at 10 seconds into the output of A1.asf **802** and ends at the end of the output of A1.asf **802**. Therefore, the output of A2.asf **804** is also initiated at 10 seconds. The cross fade **806** is shown as inputting two different media, i.e. A1.asf **802** and A2.asf **804**, and providing a single output having the desired effect.

[0083] **FIG. 9** is an illustration of a media timeline **900** in an exemplary implementation that is suitable to implement the cross fade **806** effect of **FIG. 8**. The media timeline **900** includes a parallel node **902** having two children, i.e. leaf nodes **904**, **906**. The parallel node **902** includes metadata that specifies a start time **908** of zero seconds and a stop time **910** of twenty seconds. The parallel node **902** also includes a composite effect **912** that describes a cross fade. The leaf node **904** includes metadata indicating a start time **914** of zero seconds and a stop time **916** of twenty seconds. Leaf node **906** includes metadata having a start time **918** of ten seconds and a stop time **920** of thirty seconds.

[0084] Leaf node **904** also includes a pointer **922** that references the A1.asf **802** file described in relation of **FIG. 8**. Likewise, leaf node **906** includes a pointer **924** that references the A2.asf file **804** that was described in relation to **FIG. 8**. Thus, when the media timeline **900** is executed, the A1.asf **802** file and the A2.asf file **804** are output in a manner that employs the effect **912** as shown in **FIG. 8**.

[0085] The application **202**, to play (i.e., render) the media timeline **900** of **FIG. 9**, derives a plurality of segments, during which, components rendering during the segment do not change, i.e., each component is rendered for the duration of the segment and components are not added or removed during the segment. An example of segments the media timeline **900** of **FIG. 9** is shown in the following figure.

[0086] **FIG. 10** is an illustration of an exemplary implementation **1000** showing a plurality of segments derived from the media timeline **900** of **FIG. 9** by an application for rendering by the media timeline processing infrastructure. As previously described, the application may segment the media timeline **900** into a plurality of topologies for rendering by the media timeline processing infrastructure. In an implementation, each segment describes a topology having components, the rendering of which, do not change for the duration of the segment.

[0087] The media timeline **900** of **FIG. 9**, for example, may be divided into a plurality of segments **1002**, **1004**, **1006**. Segment **1002** specifies that audio file A1.asf **802** is rendered to a media sink **1008** between a time period from "0" to "10". Segment **1004** describes application of the cross fade **806** effect to transition between the output of audio file A1.asf **802** and audio file A2.asf **804** which occurs during a time period from "10" to "20". Accordingly, the topology shown in segment **1004** illustrates an output from audio file A1.asf **802** and an output from audio file A2.asf **804** as being provided to the cross fade **806** effect, the output of which is then provided to the media sink **1008**. Segment **1006** describes the rendering (i.e., "playing") of the audio file A2.asf **804** during a time period between "20" and "30". To play the media timeline **900** of **FIG. 9**, the application **202** queues the topologies shown in segments **1002-1006** to be rendered by the media session **214**, further discussion of which may be found in relation to the following exemplary procedure.

[0088] **FIG. 11** is a flow diagram depicting a procedure **1100** in an exemplary implementation in which an application segments a media timeline into a plurality of topologies for rendering by the media timeline processing infrastructure. An application receives a request to render a media timeline (block **1102**). For example, the application may be configured as a media player. The media player may output a user interface (e.g., a graphical user interface) having a plurality of playlists for user selection. Therefore, a user may interact with the user interface to select one of the plurality of playlists to be output by the application.

[0089] The application then derives a plurality of segments from the media timeline (block **1104**). For example, the application may determine which components are utilized during the rendering of the media timeline for a particular duration. The application may then determine segments of the duration which reference media items which do not change during the duration of the segment, i.e., media items are not added or removed during the segment.

[0090] Once the media timeline has been segmented, the application constructs a data structure describing the plurality of segments (block **1106**). For example, the application may segment the media timeline **900** of **FIG. 9** into the plurality of segments **1002-1006** of **FIG. 10**. Each of the plurality of segments includes a topology of components which are utilized to render the referenced media for that segment. Accordingly, each of these topologies may be entered into a data structure (e.g., an array) which references the components needed to render the media and also describes interactions between the components. For example, segment **1004** describes a topology which defines an output from audio file A1.asf **802** and an output from audio file A2.asf **804** as being provided to the cross fade **806** effect, the output of which is then provided to the media sink **1008**. A variety of other examples are also contemplated.

[0091] The application then passes the data structure to the sequencer source via an application programming interface (API) (block **1108**). As previously described in relation to **FIG. 7**, the application then obtains the topology from the sequencer source which corresponds to a presentation descriptor (block **1110**). For example, the application may communicate the presentation descriptor to the sequencer source and receive a topology corresponding to the presentation descriptor. In another example, the sequencer source may "set" the topology on the media session. In addition, the obtained topology may be configured in a variety of ways. For example, the obtained topology may be a partial topology that is resolved into a full topology by the topology loader **232** of **FIG. 2**. In another example, the sequencer source **122** may incorporate the functionality of the topology loader to resolve the partial topology to a full topology, which is then obtained by the media session **214**. A variety of other examples are also contemplated.

[0092] The topology is then set on the media session (block **1112**). For example, the media session **214** may include a queue for topologies such that the topologies may be rendered in sequence, one after the other, without encountering a "gap" between the rendering of the topologies. Therefore, the application may call the media session to "set" a first one of the queued topologies to be rendered and call "start" on the media session to begin the rendering (block **1114**).

[0093] During the rendering, the application may "listen" for media session events (block **1116**). For example, the

application **202** may receive status events from the media session **214** as illustrated by arrow **304** of **FIG. 3**. The application may then determine if a "new topology" event is received (decision block **1118**). If not ("no" from decision block **1118**), the application may continue "listening" to the events. If so ("yes" from decision block **1118**), a new presentation descriptor for the new topology is obtained (block **1120**) and a portion of the procedure **1100** is repeated.

[**0094**] A variety of media timelines may be rendered by the media timeline processing infrastructure. For example, a media timeline may be "event based" such that an author may specify the started of media based on an event. For instance, at time "12 am" start playing audio file "A1.asf". These object modes may queue media on the sequencer source during playback, and can cancel or update topologies which have already been queued as previously described.

[**0095**] Exemplary Operating Environment

[**0096**] The various components and functionality described herein are implemented with a number of individual computers. **FIG. 12** shows components of a typical example of a computer environment **1200**, including a computer, referred by to reference numeral **1202**. The computer **1202** may be the same as or different from computer **102** of **FIG. 1**. The components shown in **FIG. 12** are only examples, and are not intended to suggest any limitation as to the scope of the functionality of the invention; the invention is not necessarily dependent on the features shown in **FIG. 12**.

[**0097**] Generally, various different general purpose or special purpose computing system configurations can be used. Examples of well known computing systems, environments, and/or configurations that may be suitable for use with the invention include, but are not limited to, personal computers, server computers, hand-held or laptop devices, multiprocessor systems, microprocessor-based systems, set top boxes, programmable consumer electronics, network PCs, network-ready devices, minicomputers, mainframe computers, distributed computing environments that include any of the above systems or devices, and the like.

[**0098**] The functionality of the computers is embodied in many cases by computer-executable instructions, such as software components, that are executed by the computers. Generally, software components include routines, programs, objects, components, data structures, etc. that perform particular tasks or implement particular abstract data types. Tasks might also be performed by remote processing devices that are linked through a communications network. In a distributed computing environment, software components may be located in both local and remote computer storage media.

[**0099**] The instructions and/or software components are stored at different times in the various computer-readable media that are either part of the computer or that can be read by the computer. Programs are typically distributed, for example, on floppy disks, CD-ROMs, DVD, or some form of communication media such as a modulated signal. From there, they are installed or loaded into the secondary memory of a computer. At execution, they are loaded at least partially into the computer's primary electronic memory.

[**0100**] For purposes of illustration, programs and other executable program components such as the operating system are illustrated herein as discrete blocks, although it is recognized that such programs and components reside at various times in different storage components of the computer, and are executed by the data processor(s) of the computer.

[**0101**] With reference to **FIG. 12**, the components of computer **1202** may include, but are not limited to, a processing unit **1204**, a system memory **1206**, and a system bus **1208** that couples various system components including the system memory to the processing unit **1204**. The system bus **1208** may be any of several types of bus structures including a memory bus or memory controller, a peripheral bus, and a local bus using any of a variety of bus architectures. By way of example, and not limitation, such architectures include Industry Standard Architecture (ISA) bus, Micro Channel Architecture (MCA) bus, Enhanced ISA (EISAA) bus, Video Electronics Standards Association (VESA) local bus, and Peripheral Component Interconnect (PCI) bus also known as the Mezzanine bus.

[**0102**] Computer **1202** typically includes a variety of computer-readable media. Computer-readable media can be any available media that can be accessed by computer **1202** and includes both volatile and nonvolatile media, removable and non-removable media. By way of example, and not limitation, computer-readable media may comprise computer storage media and communication media. "Computer storage media" includes volatile and nonvolatile, removable and non-removable media implemented in any method or technology for storage of information such as computer-readable instructions, data structures, program modules, or other data. Computer storage media includes, but is not limited to, RAM, ROM, EEPROM, flash memory or other memory technology, CD-ROM, digital versatile disks (DVD) or other optical disk storage, magnetic cassettes, magnetic tape, magnetic disk storage or other magnetic storage devices, or any other medium which can be used to store the desired information and which can be accessed by computer **1202**. Communication media typically embodies computer-readable instructions, data structures, program modules or other data in a modulated data signal such as a carrier wave or other transport mechanism and includes any information delivery media. The term "modulated data signal" means a signal that has one or more if its characteristics set or changed in such a manner as to encode information in the signal. By way of example, and not limitation, communication media includes wired media such as a wired network or direct-wired connection and wireless media such as acoustic, RF, infrared and other wireless media. Combinations of any of the above should also be included within the scope of computer readable media.

[**0103**] The system memory **1206** includes computer storage media in the form of volatile and/or nonvolatile memory such as read only memory (ROM) **1210** and random access memory (RAM) **1212**. A basic input/output system **1214** (BIOS), containing the basic routines that help to transfer information between elements within computer **1202**, such as during start-up, is typically stored in ROM **1210**. RAM **1212** typically contains data and/or software components that are immediately accessible to and/or presently being operated on by processing unit **1204**. By way of example, and not limitation, **FIG. 12** illustrates operating system **1216**, application programs **1218**, software components **1220**, and program data **1222**.

[0104] The computer **1202** may also include other removable/non-removable, volatile/nonvolatile computer storage media. By way of example only, **FIG. 12** illustrates a hard disk drive **1224** that reads from or writes to non-removable, nonvolatile magnetic media, a magnetic disk drive **1226** that reads from or writes to a removable, nonvolatile magnetic disk **1228**, and an optical disk drive **1230** that reads from or writes to a removable, nonvolatile optical disk **1232** such as a CD ROM or other optical media. Other removable/non-removable, volatile/nonvolatile computer storage media that can be used in the exemplary operating environment include, but are not limited to, magnetic tape cassettes, flash memory cards, digital versatile disks, digital video tape, solid state RAM, solid state ROM, and the like. The hard disk drive **1224** is typically connected to the system bus **1208** through a non-removable memory interface such as data media interface **1234**, and magnetic disk drive **1226** and optical disk drive **1230** are typically connected to the system bus **1208** by a removable memory interface.

[0105] The drives and their associated computer storage media discussed above and illustrated in **FIG. 12** provide storage of computer-readable instructions, data structures, software components, and other data for computer **1202**. In **FIG. 12**, for example, hard disk drive **1224** is illustrated as storing operating system **1216'**, application programs **1218'**, software components **1220'**, and program data **1222'**. Note that these components can either be the same as or different from operating system **1216**, application programs **1218**, software components **1220**, and program data **1222**. Operating system **1216'**, application programs **1218'**, software components **1220'**, and program data **1222'** are given different numbers here to illustrate that, at a minimum, they are different copies. A user may enter commands and information into the computer **1202** through input devices such as a keyboard **1236**, and pointing device (not shown), commonly referred to as a mouse, trackball, or touch pad. Other input devices may include source peripheral devices (such as a microphone **1238** or camera **1240** which provide streaming data), joystick, game pad, satellite dish, scanner, or the like. These and other input devices are often connected to the processing unit **1202** through an input/output (I/O) interface **1242** that is coupled to the system bus, but may be connected by other interface and bus structures, such as a parallel port, game port, or a universal serial bus (USB). A monitor **1244** or other type of display device is also connected to the system bus **1208** via an interface, such as a video adapter **1246**. In addition to the monitor **1244**, computers may also include other peripheral rendering devices (e.g., speakers) and one or more printers, which may be connected through the I/O interface **1242**.

[0106] The computer may operate in a networked environment using logical connections to one or more remote computers, such as a remote device **1250**. The remote device **1250** may be a personal computer, a network-ready device, a server, a router, a network PC, a peer device or other common network node, and typically includes many or all of the elements described above relative to computer **1202**. The logical connections depicted in **FIG. 12** include a local area network (LAN) **1252** and a wide area network (WAN) **1254**. Although the WAN **1254** shown in **FIG. 12** is the Internet, the WAN **1254** may also include other networks. Such networking environments are commonplace in offices, enterprisewide computer networks, intranets, and the like.

[0107] When used in a LAN networking environment, the computer **1202** is connected to the LAN **1252** through a network interface or adapter **1256**. When used in a WAN networking environment, the computer **1202** typically includes a modem **1258** or other means for establishing communications over the Internet **1254**. The modem **1258**, which may be internal or external, may be connected to the system bus **1208** via the I/O interface **1242**, or other appropriate mechanism. In a networked environment, program modules depicted relative to the computer **1202**, or portions thereof, may be stored in the remote device **1250**. By way of example, and not limitation, **FIG. 12** illustrates remote software components **1260** as residing on remote device **1250**. It will be appreciated that the network connections shown are exemplary and other means of establishing a communications link between the computers may be used.

[0108] As previously described, the application programs **1218**, **1218'** may also provide media timelines for rendering by the media foundation **204** of **FIG. 2**. Exemplary implementations of media timelines may be found in relation to the following figures.

[0109] Exemplary Media Timeline Implementations

[0110] The media timelines previously discussed may employ a variety of methods of storing and restoring timeline data, such as one or more Windows® Media Player Playlist files, eXecutable Temporal Language (XTL) files, and so on.

[0111] A media timeline, for instance, may be described as the following Windows® Media Player Playlist file identified by an ASX file extension.

```
<Asx Version = "3.0">
<Entry>
<Ref href = "file://\\wmp\content\mpeg\Boom.mpe"/>
</Entry>
<Entry>
<Ref href = "\\wmp\content\Formats\MovieFile\chimp.mpg"/>
</Entry>
<Entry>
<Ref href = "file://\\wmp\content\mpeg\Boom.mpe"/>
</Entry>
</Asx>
```

This ASX file specifies three files for output, back to back. No start and stop times have been specified for the files. The ASX file may be represented by the media timeline **1300** shown in **FIG. 13** that includes a sequence node **1302** and three leaf nodes **1304**, **1306**, **1308**. Each of the leaf nodes **1304-1308** includes respective metadata **1310**, **1312**, **1314** that describes respective sources **1316**, **1318**, **1320** for media to be output by the media timeline **1300**.

[0112] Another example of a media timeline is shown in the following XTL file.

```
<timeline>
<group type="video">
    <track>
<clip src="V1.wmv" start="0" stop="30" mstart="50" mstop="80"
/>
<clip src="V2.wmv" start="30" stop="40" mstart="0" />
```

-continued

```
    </track>
</group>
<group type="audio">
    <track>
<clip src="A1.asf" start="20" stop="40" mstart="0" />
<clip src="A2.asf" start="40" stop="60" mstart="0" />
</track>
</group>
</timeline>
```

This XTL file describes two tracks, e.g., streams, of media for output. One of the tracks is an audio track and the other is a video track.

[0113] The XTL file may be represented by the media timeline **1400** that is shown in **FIG. 14** that includes a parallel node **1402** having two child sequence nodes **1404**, **1406**. In this example, sequence node **1404** has a major type **1408** filter set as "video" and sequence node **1406** has a major type **1410** filter set as "audio". Sequence node **1404** has two child leaf nodes **1412**, **1414**. Leaf node **1412** includes metadata that specifies a start time **1416** of "0", a stop time **1418** of "30", a media start **1420** of "50", and a media stop **1422** as "80". Leaf node **1414** include metadata that specifies a start time **1424** of "30", a stop time **1426** of "40", and media start **1428** as "0". It should be noted that leaf node **1414** does not include a media stop time, therefore the entire length of the media referenced by the leaf node **1414** will be output.

[0114] Sequence node **1406** also has two child leaf nodes **1430**, **1432**. Leaf node **1430** includes metadata that specifies a start time **1434** of "20", a stop time **1436** of "40", and a media start **1438** of "0". Leaf node **1432** include metadata that specifies a start time **1440** of "40", a stop time **1442** of "60", and media start **1444** of "0".

CONCLUSION

[0115] Although the invention has been described in language specific to structural features and/or methodological acts, it is to be understood that the invention defined in the appended claims is not necessarily limited to the specific features or acts described. Rather, the specific features and acts are disclosed as exemplary forms of implementing the claimed invention.

What is claimed is:

1. A method comprising executing an application to:

derive a plurality of segments from a media timeline, wherein:

the media timeline references a plurality of media; and

each said segment references media to be rendered during a duration of the segment; and

queue the plurality of segments via an application programming interface for rendering by an infrastructure.

2. A method as described in claim 1, wherein the media timeline references at least two different types of media.

3. A method as described in claim 1, wherein the application is not configured to render the media itself.

4. A method as described in claim 1, wherein the application is not aware of how one or more said media are rendered by the infrastructure.

5. A method as described in claim 1, wherein the plurality of segments are queued for rendering by the infrastructure in a data structure that is exposed via the application programming interface by the infrastructure to the application.

6. A method as described in claim 1, wherein the media timeline utilizes one or more proprietary techniques for describing the media timeline that are not exposed by the application to the infrastructure.

7. A method as described in claim 1, further comprising changing a topology of at least one said segment while another said segment is being rendered through interaction of the application with the infrastructure via the application programming.

8. A method as described in claim 1, further comprising receiving a request to render the media timeline via a user interface output by the application.

9. A method comprising:

receiving a request to render a media timeline by an application, wherein the media timeline:

includes a plurality of nodes; and

defines a presentation of a first media referenced by a first said node with respect to a second media referenced by a second said node;

deriving a plurality of segments from the media timeline by the application, wherein each said segment includes one or more nodes that are rendered during a duration of the segment; and

passing the plurality of segments via an application programming interface by the application for rendering by an infrastructure such that the application is not aware of how one or more said media are rendered by the infrastructure.

10. A method as described in claim 9, wherein the plurality of segments are queued for rendering by the infrastructure in a data structure that is exposed via an application programming interface by the infrastructure to the application.

11. A method as described in claim 10, further comprising changing a topology of at least one said segment while another said segment is being rendered through interaction of the application with the infrastructure via the application programming.

12. A method as described in claim 9, wherein the media timeline utilizes one or more proprietary techniques for describing the media timeline that are not exposed by the application to the infrastructure.

13. A method as described in claim 9, wherein the application is not aware of how one or more said media are rendered by the infrastructure.

14. A method as described in claim 9, wherein the application is not configured to render the media itself.

15. One or more computer readable media comprising computer executable instructs that, when executed, provide an infrastructure having an application programming interface that is configured to accept a plurality of segments from an application for sequential rendering, wherein each said segment:

references at least one media item for rendering by the infrastructure; and

is segment from a media timeline by an application.

16. One or more computer readable media as described in claim 15, wherein the plurality of segments are queued for rendering by the infrastructure in a data structure that is exposed via the application programming interface to the application.

17. One or more computer readable media as described in claim 16, wherein the infrastructure is configured to accept a change made by the application to a topology of at least one said segment while another said segment is being rendered.

18. One or more computer readable media as described in claim 15, wherein the media timeline utilizes one or more proprietary techniques for describing the media timeline that are not exposed by the application to the infrastructure.

19. One or more computer readable media as described in claim 15, wherein the application is not aware of how one or more said media are rendered by the infrastructure.

20. One or more computer readable media as described in claim 15, wherein the application is not configured to render the media itself.

* * * * *