US006408096B2

(12) **United States Patent**
Tan

(10) **Patent No.: US 6,408,096 B2**
(45) **Date of Patent: *Jun. 18, 2002**

(54) **METHOD FOR COMPUTATIONAL GRACEFUL DEGRADATION IN AN AUDIOVISUAL COMPRESSION SYSTEM**

(75) Inventor: **Thiow Keng Tan**, Singapore (SG)

(73) Assignee: **Matsushita Electric Industrial Co., Ltd.**, Osaka (JP)

(*) Notice: This patent issued on a continued prosecution application filed under 37 CFR 1.53(d), and is subject to the twenty year patent term provisions of 35 U.S.C. 154(a)(2).

Subject to any disclaimer, the term of this patent is extended or adjusted under 35 U.S.C. 154(b) by 0 days.

This patent is subject to a terminal disclaimer.

(21) Appl. No.: **09/176,104**

(22) Filed: **Oct. 21, 1998**

(30) **Foreign Application Priority Data**

Oct. 24, 1997 (SG) 9703861

(51) **Int. Cl.**[7] **G06K 9/36**

(52) **U.S. Cl.** **382/232**; 382/233; 382/250; 382/251; 382/246

(58) **Field of Search** 382/244, 246, 382/250, 251, 253, 233, 232, 240; 348/63, 62; 358/260, 133, 261; 340/345, 146.3

(56) **References Cited**

U.S. PATENT DOCUMENTS

5,128,756 A * 7/1992 Johnston et al. 375/240.12
5,402,146 A 3/1995 Rodriguez et al.
5,434,913 A * 7/1995 Tung et al. 379/202.01
5,461,679 A * 10/1995 Normile et al. 382/304
5,537,551 A * 7/1996 Denenberg et al. 709/247
6,005,980 A * 12/1999 Eifrig et al. 382/236
6,026,088 A * 2/2000 Rostoker et al. 370/395.53
6,072,830 A * 6/2000 Proctor et al. 375/240.22

FOREIGN PATENT DOCUMENTS

EP	676899	3/1995
EP	650298	4/1995
EP	677961	10/1995
EP	739141	10/1996
WO	99/12126	3/1999

* cited by examiner

Primary Examiner—Phuoc Tran
Assistant Examiner—Ali Bayat
(74) *Attorney, Agent, or Firm*—Greenblum & Bernstein, P.L.C.

(57) **ABSTRACT**

The invention disclosed here is a method for an encoder to encode audiovisual information for transmission to the decoder without any prior knowledge of the computational capabilities of the decoder. A descriptor containing parameters that can be used to estimate the complexity of the decoding process is embedded in the system stream. The encoder also encodes the video information in such a manner that the decoder can choose to ignore some of the information and only decode a subset of the encoded information in order to reduce the computational requirements. This method allows more than one decoder to decode the same bitstream giving different resolutions depending on the computational capability of the decoder.

2 Claims, 6 Drawing Sheets

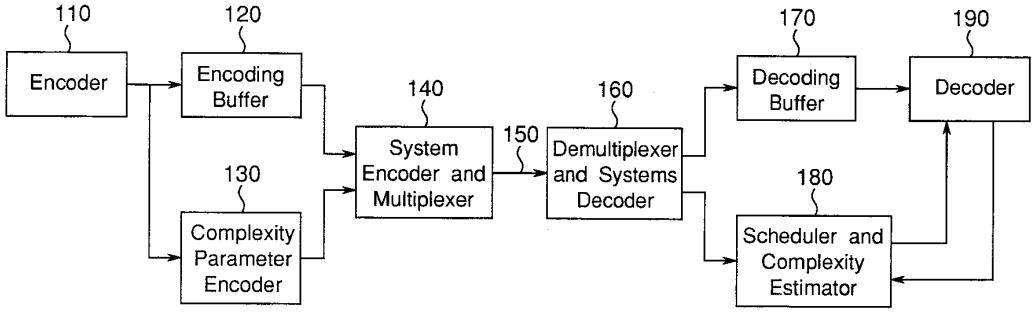

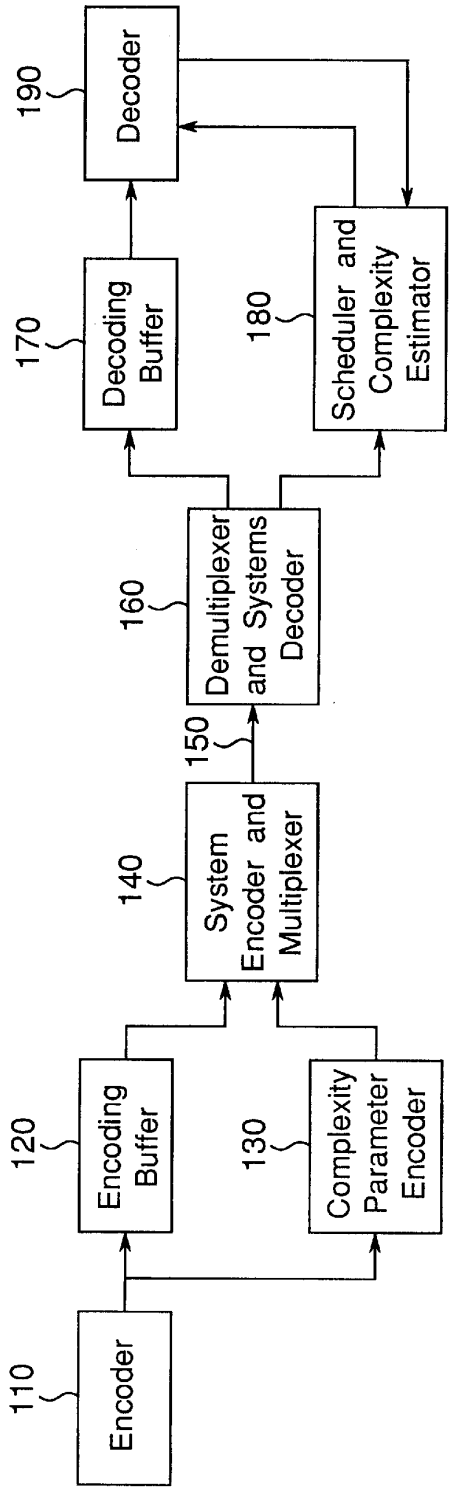
110
Encoder
120
Encoding Buffer
130
Complexity Parameter Encoder
140
System Encoder and Multiplexer
150
160
Demultiplexer and Systems Decoder
170
Decoding Buffer
180
Scheduler and Complexity Estimator
190
Decoder

Fig. 1

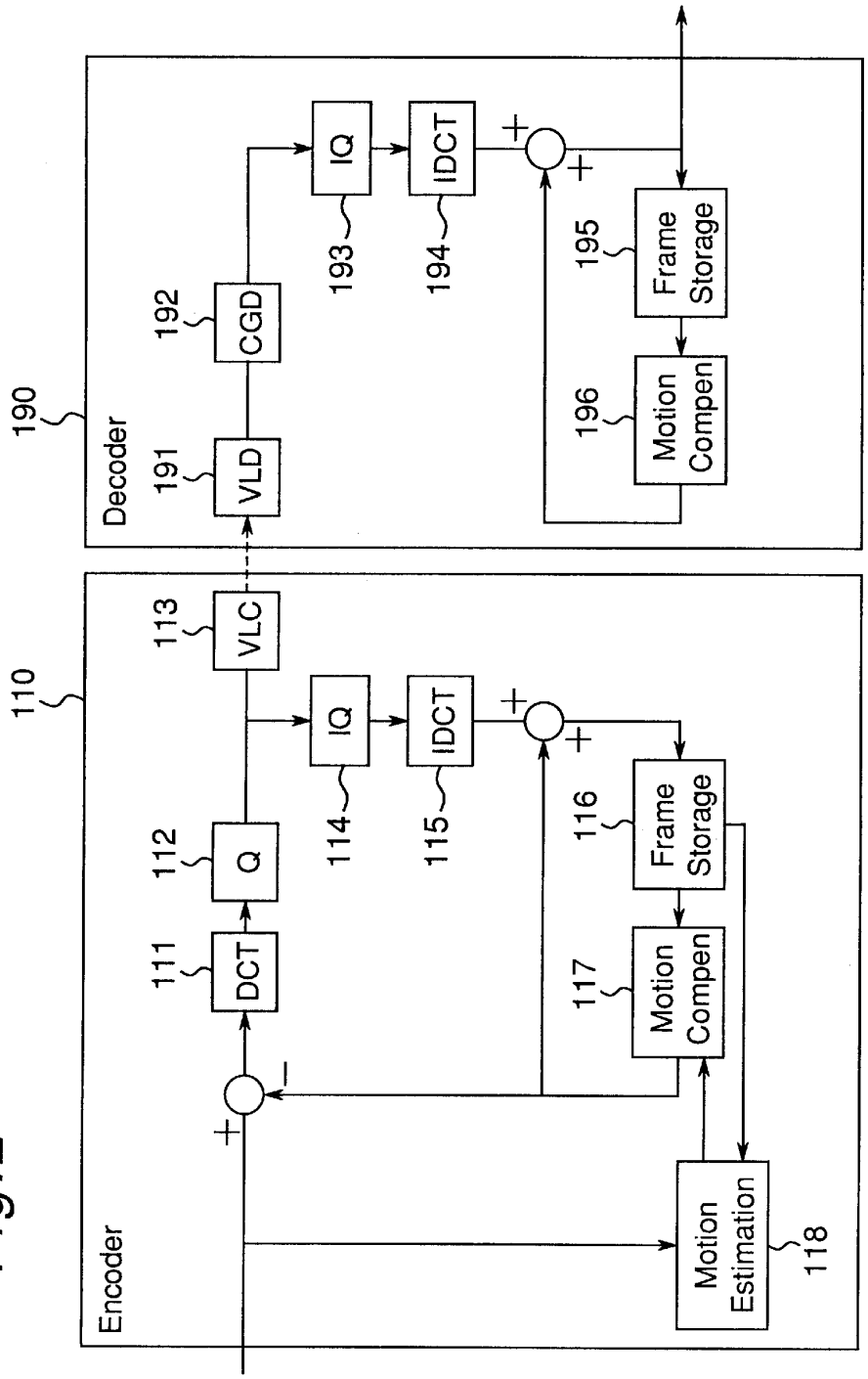
Fig.2
Encoder
110
111
DCT
112
Q
113
VLC
114
IQ
115
IDCT
116
Frame Storage
117
Motion Compen
118
Motion Estimation
Decoder
190
191
VLD
192
CGD
193
IQ
194
IDCT
195
Frame Storage
196
Motion Compen

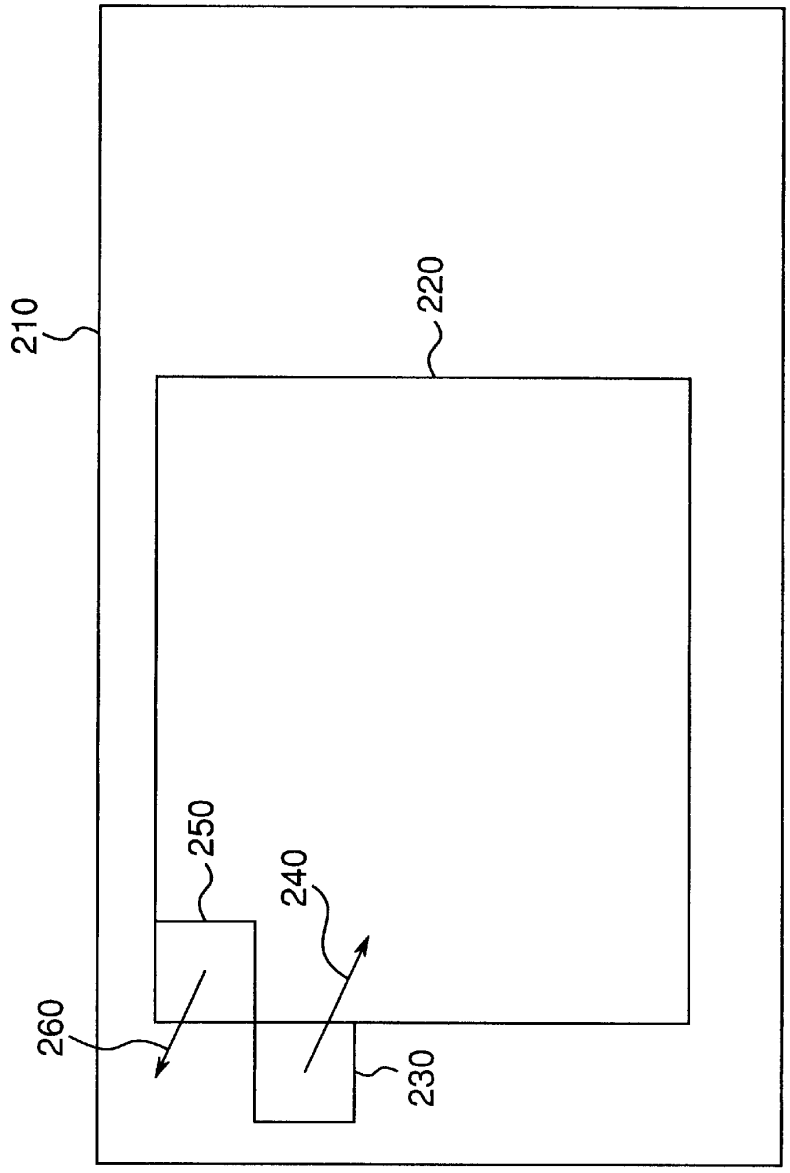

Fig.3

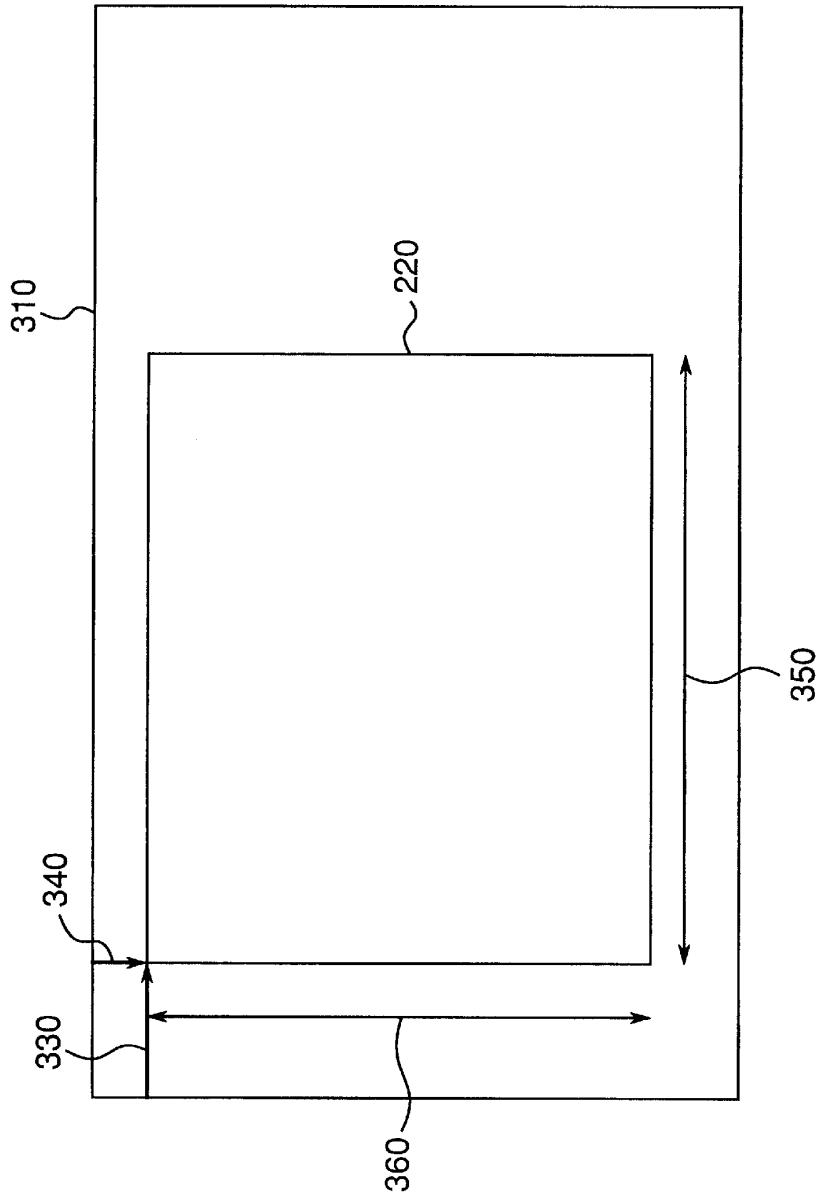

Fig. 4

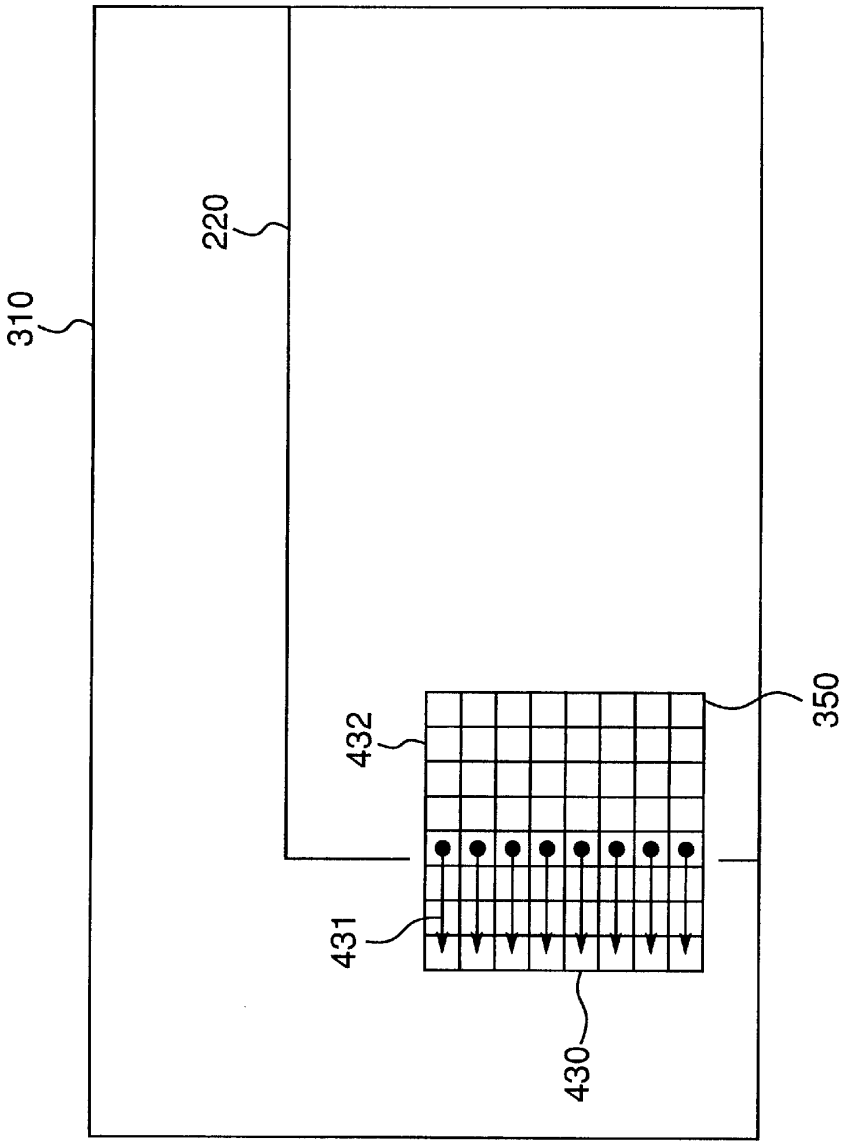

Fig.5

Fig. 6

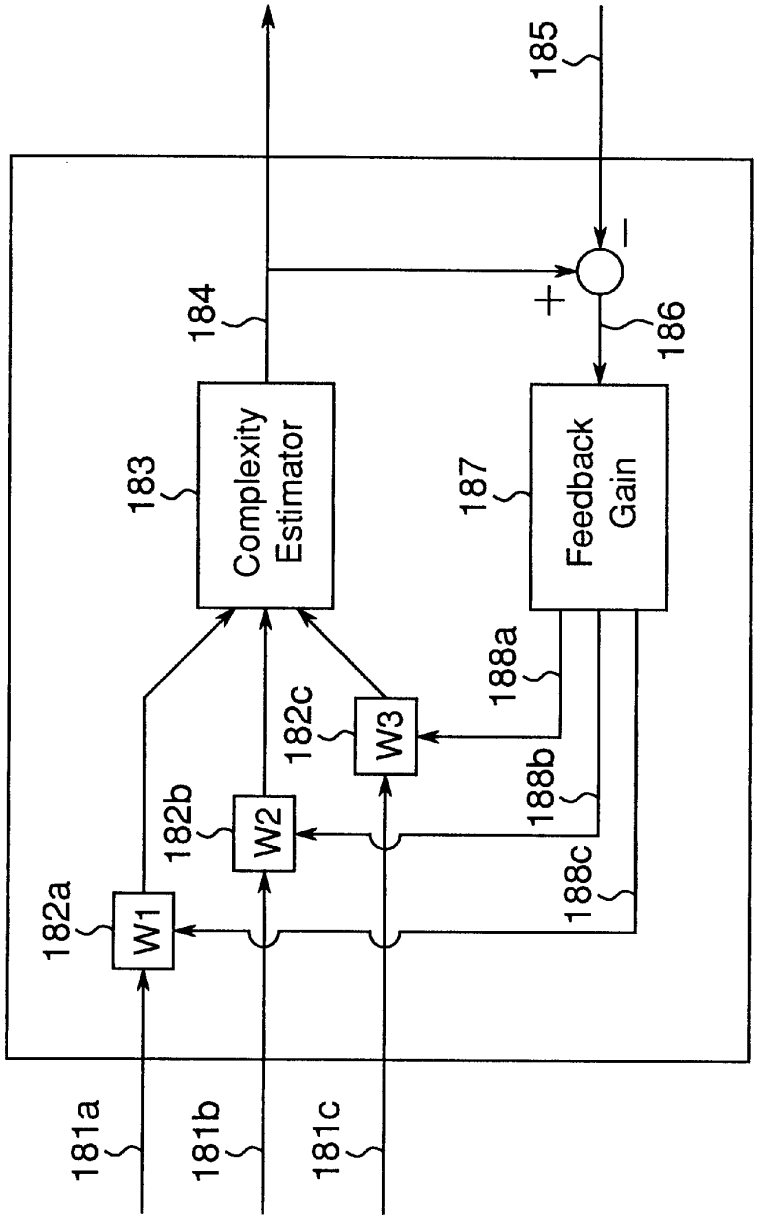
181a
181b
181c
182a
W1
182b
W2
182c
W3
183
Complexity Estimator
184
185
186
+
−
187
Feedback Gain
188a
188b
188c

METHOD FOR COMPUTATIONAL GRACEFUL DEGRADATION IN AN AUDIOVISUAL COMPRESSION SYSTEM

BACKGROUND OF THE INVENTION

1. Field of the Invention

The present invention relates to a method for computational graceful degradation in an audiovisual compression system. This invention is useful in a multimedia encoding and decoding environment where the computational demands for decoding a bitstream is not well defined. It is also useful in cases where channel capacity is limited and some form of quality of service guarantee is required. It is also useful for inter working between two video services of different resolutions.

2. Description of the Related Art

It is common in the case of software decoding to employ some form of graceful degradation when the system resources is not sufficient to fully decode all of the video bitstream. These degradation ranges from partial decoding of the picture elements to dropping of complete pictures. This is easy to implement in the case of a single video stream.

In the proposed new ISO/IEC SC29WG11 standard of MPEG-4, it is possible to send multiple Audiovisual, AV, objects. Therefore, the total complexity requirements no longer depend on one single stream but on multiple streams.

In compression systems such as MPEG-1, MPEG-2 and MPEG-4, a high degree of temporal redundancy is removed by employing motion compensation. It is intuitive to see that successive pictures in a video sequence will contain very similar information. Only regions of the picture that are moving will change from picture to picture. Furthermore, these regions usually move as a unit with uniform motion. Motion compensation is a technique where the encoder and the decoder keep the reconstructed picture as a reference for the prediction of the current picture being encoded or decoded. The encoder mimics the decoder by implementing a local decoder loop. Thus, keeping the reconstructed picture synchronized between the encoder and decoder.

The encoder performs a search for a block in the reconstructed picture that gives the closest match to the current block that is being encoded. It then computes the prediction difference between the motion compensated block and the current block being encoded. Since the motion compensated block is available in the encoder and the decoder, the encoder only needs to send the location of this block and the prediction difference to the decoder. The location of the block is commonly referred to as the motion vector. The prediction difference is commonly referred to as the motion compensated prediction error. These information requires less bits to send that the current block itself.

In intra-picture coding, spatial redundancy may be removed in a similar way. The transform coefficients of the block can be predicted from the transform prediction of its neighboring blocks that have already being decoded.

There are two major problems to be solved in this invention. The first is how to indicate the decoding complexity requirements of the current AV object. In the case where there are multiple AV objects, the systems decoder must decide how much resource should be given to a particular object and which object should have priority over another. In other words, how to model the complexity requirements of the system. A point to be noted here is that the complexity requirements of the decoder is dependent on

the implementation of the decoder. An operation that is complex for one implementation may be simple for another implementation. Therefore, some form of implementation independent complexity measure is required.

The second problem is how to reduce complexity requirements in the decoder. This deals with the method of reducing the complexity requirements of the decoding process while retaining as much of the information as possible. One biggest problem in graceful degradation is the problem of drift caused by errors in the motion compensation. When graceful degradation is employed the reconstructed picture is incomplete or noisy. These errors are propagated from picture to picture resulting in larger and larger errors. This noise propagation is referred to as drift.

SUMMARY OF THE INVENTION

In order to solve the problems the following steps are taken in the present invention.

The AV object encoder encodes the AV object in a manner that would allow different amounts of graceful degradation to be employed in the AV object decoder. Parameters relating to the computational complexity requirements of the AV objects are transmitted in the systems encoder. Implementation independent complexity measure is achieved by sending parameters that gives an indication of the operations that are required.

At the systems decoder, estimates of the complexity required are made based on these parameters as well as the implementation methods being employed. The resource scheduler then allocates the appropriate amount of resources to the decoding of the different AV objects. In the AV object decoder, computational graceful degradation is employed when the resources are not sufficient to decode the AV object completely.

In accordance with a first aspect of the present invention, a method of encoding a plurality of audiovisual objects into a compressed coded representation suitable for computational graceful degradation at the decoder comprises:

- encoding said audiovisual objects, incorporation methods allowing computational graceful degradation to be employed in the decoder, into their coded representations;
- estimating the implementation independent computational complexity measures in terms of a plurality of block decoding parameters;
- partitioning said coded representations of the audiovisual objects into a plurality of access units and adding header information to form packets;
- inserting a descriptor containing said block decoding parameters into the header of the packet; and
- multiplexing these packets to form a single multiplexed bitstream.

In accordance with a second aspect of the present invention, a method of decoding a multiplexed bitstream, with computational graceful degradation, to obtained a plurality of audiovisual objects, comprises:

- de-multiplexing the single multiplexed bitstream into a plurality of packets comprising of packet headers and access units;
- extracting the descriptor containing a plurality of block decoding parameters from the packet headers;
- reassembling the access units into their original coded representations of the audiovisual objects;
- estimating the decoder specific computational complexity measures based on said block decoding parameters and the current decoder implementation; and

decoding said coded representations of the audiovisual objects, using computational graceful degradation, where necessary, to satisfy the estimated decoder specific computational complexity requirements.

Preferably, the incorporation methods allowing computational graceful degradation to be employed in the decoder, comprise:

partitioning the input pictures to be encoded into a plurality of sub-regions numbered in increasing order, beginning with the full picture as the first sub-region, where each sub-region comprising only of a subset of the pixels within the sub-region preceding it;

entropy coding the position and dimension of the sub-regions into a compressed coded representation within the bitstream;

further partitioning the sub-regions into a plurality of blocks for encoding into a compressed coded representation within the bitstream;

performing motion estimation and motion compensation for said blocks using only the pixels from the reconstructed picture that belong to sub-regions having the same or higher numeric order as said blocks;

entropy coding the motion vectors into a compressed coded representation within the bitstream;

transforming the motion compensated prediction difference into an orthogonal domain;

quantizing the transformed coefficients using a quantization method; and,

entropy coding the quantized transformed coefficients into a compressed coded representation within the bitstream.

Preferably, the method for decoding the coded representations of the audiovisual objects in accordance with the second aspect, using computational graceful degradation where necessary to satisfy the estimated decoder specific computational complexity requirements, further comprises:

entropy decoding the position and dimension of the sub-regions from the compressed coded representation within the bitstream;

selecting only the blocks that are within the sub-region of interest for decoding;

entropy decoding the compressed coded representation to give quantized transformed coefficients;

inverse quantizing said quantized transformed coefficients to give the transformed coefficients;

inverse transforming said transform coefficients to give the spatial domain motion compensated prediction difference;

entropy decoding the motion vectors from the compressed coded representation within the bitstream;

performing motion compensation for said blocks using only the pixels from the reconstructed picture that belong to sub-regions having the same or higher numeric order as said blocks; and,

reconstructing the picture and storing said picture -in the frame memory for prediction of the next picture.

Preferably, the method in accordance with the first aspect of the invention, whereby incorporation methods allowing computational graceful degradation to be employed in the decoder, further comprises:

partitioning the input pictures to be encoded into a plurality of sub-regions numbered in increasing order, beginning with the full picture as the first sub-region, where each sub-region comprising only of a subset of the pixels within the sub-region preceding it;

entropy coding the position and dimension of the sub-regions into a compressed coded representation within the bitstream;

further partitioning the sub-regions into a plurality of blocks for encoding into a compressed coded representation within the bitstream;

transforming said blocks into an orthogonal domain;

quantizing the transformed coefficients using a quantization method;

performing quantized transform coefficient prediction for said blocks using only the corresponding quantized transform coefficients from the blocks above and to the left that belong to sub-regions having the same or higher numeric order as said blocks; and,

entropy coding the predicted difference of the quantized transformed coefficients into a compressed coded representation within the bitstream.

Preferably, the method in accordance with the first aspect of the invention, comprises:

entropy decoding the position and dimension of the sub-regions from the compressed coded representation within the bitstream;

selecting only the blocks that are within the sub-region of interest for decoding;

entropy decoding the compressed coded representation to give quantized transformed coefficients;

performing quantized transform coefficient prediction for said blocks using only the corresponding quantized transform coefficients from the blocks above and to the left that belong to sub-regions having the same or higher numeric order as said blocks;

inverse quantizing said quantized transformed coefficients to give the transformed coefficients;

inverse transforming said transform coefficients to give the spatial domain pixel values; and,

reconstructing the picture and storing said picture in the frame memory for prediction of the next picture.

Typically, the plurality of block decoding parameters comprises numeric numbers indicating the number of:

block entropy decoding operations;

block motion compensation operation;

block inverse quantization operations;

block transform operations;

block addition operations; and,

block memory access operations.

Preferably, the descriptor comprises:

a descriptor identification number signaling the descriptor type;

a descriptor length field to indicate the size of the descriptor; and,

a plurality of block decoding parameters.

Typically, in the method of partitioning the input pictures to be encoded into a plurality of sub-regions, the sub-regions are rectangular.

Preferably, in the method of performing motion estimation and motion compensation for said blocks, using only the pixels from the reconstructed picture that belong to sub-regions having the same or higher numeric order as said blocks, implies that only prediction blocks that lie completely within said sub-regions are selected.

Typically, when only the pixels from the reconstructed picture that belong to sub-regions having the same or higher numeric order as said blocks are used, prediction blocks may

lie partially outside said sub-regions but with the additional condition that the pixels lying outside said sub-region are replaced by the nearest pixels from within the sub-regions.

Preferably, in the method of partitioning the pictures into a plurality of sub-regions, the position and dimension of each of said sub-regions may vary from picture to picture and said position and said dimension are coded by means of a pan scan vector, giving the horizontal and vertical displacement, a width and a height.

Typically, in the method of partitioning the pictures into a plurality of sub-regions, the position and dimension of the sub regions are the same from picture to picture and said position and said dimension are coded once at the beginning of the sequence by means of a horizontal and vertical displacement, a width and a height.

Preferably, in the method of encoding and decoding, the transform is the Discrete Cosine Transform.

Typically, in the method of encoding and decoding, the number of sub-regions is two.

Preferably, in the method where there is a plurality of sub-region numbered in increasing order and the motion vector can point into a sub-region of lower order but not out of a lower order to a higher ordered number.

BRIEF DESCRIPTION OF THE DRAWINGS

FIG. **1** is an overall block diagram of the present invention;

FIG. **2** shows a block diagram of encoder and decoder of the present invention;

FIG. **3** illustrates the embodiment of the sub-region and the motion vector restriction of the present invention;

FIG. **4** illustrates the embodiment for the pan-scan vectors and the sub-region dimensions in the present invention;

FIG. **5** illustrates the second embodiment for the padding method of the motion compensated prediction at the sub-region boundary; and,

FIG. **6** illustrates the block diagram for the Complexity Estimator.

DESCRIPTION OF THE PREFERRED EMBODIMENTS

FIG. **1** shows an overall system block diagram of the present invention. Encoder unit **110** encodes the video sequence to allow computational graceful degradation techniques. The output of encoder **110** is a coded representation of the video sequence that is applied to an encoding buffer **120**. At the same time the video sequence and the coded representation are also applied to a complexity parameter encoder **130** where the parameters associated with the operation that are required for decoding is computed and encoded. These information together with the output of the encoding buffer **120** are passed to a System Encoder and Multiplexer unit **140** where a system-multiplexed stream is formed. The system-multiplexed stream is transmitted through a transmission media **150**.

A Demultiplexer and System Decoder unit **160** receives the system-multiplexed stream, where the bitstream is demultiplexed into its respective elementary streams. The video elementary stream is passed to a Decoding Buffer **170**, and complexity parameters are passed to a Scheduler and Complexity Estimator unit **180**. From the Decoding Buffer **170**, the video elementary stream is passed to a Decoder unit **190**. The decoder **190** waits for the commands coming from the Scheduler unit **180** before decoding.

The Complexity Estimator **180** gives the amount of decoder computational graceful degradation that is to be employed. Computational graceful degradation is achieved in the decoder by decoding only a sub-region of the complete picture that is deemed to contain the more important information. The encoder will have to prevent the encoder and decoder from drifting apart under these conditions. After decoding, the decoder unit **190** also feedback information to the Scheduler and Complexity Estimator **180** so that the information may be used to estimate the complexity of the next picture.

The following is the embodiment of the various units illustrated in the above invention shown in FIG. **1**.

FIG. **2** is a block diagram of the encoder and decoder according to the present embodiment. The input picture to the encoder **110** is segmented into blocks for processing. Temporal redundancy is removed from the picture by subtracting the motion compensated picture of the previous picture from the current picture. The prediction difference is then transformed into the DCT domain in a DCT unit **111**. The resulting DCT coefficients are then quantized in a Quantization unit **112**. The quantized coefficients are then entropy coded in a Variable Length Coding (VLC) unit **113** to form the compressed output bitstream. The encoder **110** also has a local decoder loop comprising of an Inverse Quantization unit **114**, an Inverse DCT unit **115**, a Frame Storage **116**, and a Motion Compensation unit **117**. The local decoder loops mimics the decoder operations by inverse quantizing the coefficients and transforming it back into the spatial domain in the Inverse Quantization unit **114** and Inverse DCT unit **115**. The output is then added to the output of the Motion Compensated unit **117** to form the reconstructed picture. This picture is stored in the Frame Storage **116** for motion compensation of the next picture.

In this embodiment the encoder units of Motion Estimation unit **118** and Motion Compensation unit **117** are changed so that computational graceful degradation may be performed in conjunction with the motion compensation without causing drift.

FIG. **3** illustrates the present invention, according to which the picture is divided into two parts **220** and **210**. The first part **220** is a sub-region that must be decoded in the decoder regardless of whether computational graceful degradation is employed or not. The second part **210** is the region outside of the sub-region, which may be discarded by the decoder when computational graceful degradation is employed.

FIG. **3** also show two blocks that are used for motion compensation. When motion compensation is performed on a block **250** that resides in the sub-region **220**, the motion compensated prediction block must also come from within the sub-region **220** of the reference picture. In other words the motion vector **260** pointing out of the region is not allowed. This is referred to restricted motion vector. On the other hand, when a block **230** resides outside the sub-region **220**, the motion compensated prediction block can come from anywhere in the reference picture. This is the same as where there is no sub-region.

FIG. **4** shows a method how to indicate the sub-region **220** within each picture. In order to specify the rectangular sub-region **220** for each picture the following parameters must be specified for each picture and be encoded in the picture header of the compress bitstream. In FIG. **4**, a picture **310** and the sub-region **220** is illustrated. The horizontal offset **330** of the left edge of sub-region **220** from the left edge of the picture, and the vertical offset **340** of the top edge of the sub-region **220** from the top edge of the picture are shown. These two parameters, referred to as the pan scan

vectors, are used to indicate the location of the sub-region. The width 350 and the height 360 of the sub-region **220** are the second set of parameters that are required to specify the dimensions of the sub-region **220**.

In a second embodiment of this invention, the motion vector for a block in the sub-region need not be restricted. It is allowed to point out of the sub-region of the reference picture. However padding is required. This is illustrated in FIG. **5** in which the picture **310** and the sub-region **220** are shown. The motion compensated prediction **430** is shown straddling the boundary of the sub-region **220**. A portion **431** of the block residing outside of the sub-region **220** is not used for prediction and is padded by repeating the value of the pixel found at the edge of the sub-region **220**. A portion **432** of the block residing in the sub-region **220** is used without any padding. A similar padding method is used for the rows and columns for blocks located at the vertical edge and horizontal edge, respectively.

Like the first embodiment, the method according to the second embodiment would also enable computational graceful degradation method to discard the portion of the picture outside the sub-region **220** without causing the encoder and decoder to drift apart.

Apart from motion compensation that may cause drift in inter blocks, intra blocks at the top and left boundary of the sub-region **220** are also restricted from using any blocks outside of the sub-region **220** for prediction. This is because in the computational graceful degraded decoder, these blocks would not be decoded and thus the prediction cannot be duplicated. This precludes the commonly used DC and AC coefficient prediction from being employed in the encoder.

FIG. **2** also illustrates a block diagram of a decoder **190**. The embodiment of the decoder **190** employing computational graceful degradation is described here. The compressed bitstream is received from the transmission and is passed to a Variable Length Decoder unit **191** where the bitstream is decoded according to the syntax and entropy method used. The decoded information is then passed to the Computational Graceful Degradation Selector **192** where the decoded information belonging to the sub-region **220** is retained and the decoded information outside of the sub-region **220** is discarded. The retained information is then passed to an Inverse Quantization unit **193** where the DCT coefficients are recovered. The recovered coefficients are then passed to an Inverse DCT unit **194** where the coefficients are transformed back to the spatial domain. The motion compensated prediction is then added to form the reconstructed picture. The reconstructed picture is stored in a Frame Storage **195** where it is used for the prediction of the next picture. A Motion compensation unit **196** performs the motion compensation according to the same method employed in the encoder **110**.

In the first embodiment of the encoder where the motion vector is restricted, no additional modification is required in the decoder. In the second embodiment of the encoder where the motion vector is not restricted, the motion compensation method with padding described above in connection with FIG. **5** is used in the decoder. Finally, intra blocks at the top and left boundary of the sub-region **220** are also restricted from using any blocks outside of the sub-region **200** for prediction. This precludes the commonly used DC and AC coefficient prediction from being employed.

In this embodiment the Complexity Parameter Encoder consist of a counting unit that counts the number of block decoding operations that are required. The block decoding operations are not basic arithmetic operations but rather a collection of operations that are performed on a block. A block decoding operation can be a block inverse quantization operation, a block inverse DCT operation, a block memory access or some other collection of operations that perform some decoding task on the block by block basis. The Complexity Parameter Encoder counts the number of blocks that require each set of operations and indicate these in the parameters. The reason block decoding operations are used instead of simple arithmetic operations is because different implementations may implement different operations more efficiently than others.

There is also a difference in decoder architecture and different amounts of hardware and software solutions that makes the use of raw processing power and memory access measures unreliable to indicate the complexity requirements. However, if the operations required are indicated by parameters that counts the number of block decoding operations necessary, the decoder can estimate the complexity. This is because the decoder knows the amount of operations required for each of the block decoding operations in its own implementation.

In the embodiment of the System Encoder and Multiplexer, the elementary bitstream are packetized and multiplexed for transmission. The information associated with the complexity parameters is also multiplexed into the bitstream. This information is inserted into the header of the packets. Decoders that do not require such information may simply skip over this information. Decoders that require such information can decode this information and interpret them to estimate the complexity requirements.

In this embodiment the encoder inserts the information in the form of a descriptor in the header of the packet. The descriptor contains an ID to indicate the type of descriptor it is followed by the total number of bytes contained in the descriptor. The rest of the descriptor contains the parameter for each of the block decoding operations. Optionally the descriptor may also carry some user defined parameters that are not defined earlier.

In the Scheduler and Complexity Estimator **180** in FIG. **1**, the time it takes for decoding all the audiovisual objects is computed based on the parameters found in the descriptor as well as the feedback information from the decoder.

An embodiment of the Complexity Estimator **180** is shown in FIG. **6**. The block decoding operation parameters **181***a*, **181***b* and **181***c* are passed into the complexity estimator **183** after being pre-multiplied with weightings **182***a*, **182***b* and **182***c*, respectively. The complexity estimator **183** then estimates the complexity of the picture to be decoder and passes the estimated complexity **184** to the decoder **190**. After decoding the picture the decoder **190** returns the actual complexity **185** of the picture. An error **186** in the complexity estimation is obtained by taking a difference between the estimated complexity **184** and the actual complexity **185** of the picture. The error **186** is then passed into the feedback gain unit **187** where the corrections **188***a*, **188***b* and **188***c* to the weightings are found. The weights are then modified by these corrections and the process of estimating the complexity of the next picture continues.

The effect of this invention is that the need for implementations that can handle the worst case is no longer necessary. Using the indications of computational complexities and the computational graceful degradation methods simpler decoders can be implemented. The decoder would have the capabilities to decode most of the sequences, but if it encounters some more demanding sequences, it can

degrade the quality and resolution of the decoder output in order to decode the bitstream.

This invention is also useful for inter working of services that have different resolutions and/or different formats. The sub-region can be decoder by the decoder of lower resolutions where as the decoder of higher resolutions can decode the full picture. One example is the inter working between 16:9 and 4:3 aspect ratio decoders.

What is claimed is:

1. A method for encoding a visual object, comprising:

encoding a visual object to obtain compressed coded data, wherein the compressed coded data is obtained through at least one of a plurality of different operations which can be performed on a block by block basis,

generating a descriptor capable of including information of a respective parameter related to the number of times that each of said operations was performed in a unit of blocks, said descriptor associated with a complexity of decoding the compressed coded data; and

multiplexing the descriptor with the compressed coded data.

2. A method for encoding a visual object having a plurality of pictures, comprising:

encoding a visual object to obtain compressed coded data, wherein the compressed coded data is obtained through segmenting each picture in a plurality of blocks and through performing at least one of a plurality of different operations on a block by block basis,

generating a descriptor related to the number of times that each of said operations was performed during encoding said picture, said descriptor associated with a complexity of decoding the compressed coded data; and

multiplexing the descriptor with the compressed coded data.

* * * * *

UNITED STATES PATENT AND TRADEMARK OFFICE

CERTIFICATE OF CORRECTION

PATENT NO. : 6,408,096 B2
DATED : June 18, 2002
INVENTOR(S) : Thiow Keng Tan

It is certified that error appears in the above-identified patent and that said Letters Patent is hereby corrected as shown below:

Title page,
Item [30], **Foreign Application Priority Data**:

"Oct. 24, 1997 (SG) 9703861" should be
-- Oct. 24, 1997 (SG) 9703861-6 --.

Signed and Sealed this

Fourth Day of January, 2003

JAMES E. ROGAN
Director of the United States Patent and Trademark Office

UNITED STATES PATENT AND TRADEMARK OFFICE

CERTIFICATE OF CORRECTION

PATENT NO. : 6,408,096 B2
DATED : June 18, 2002
INVENTOR(S) : Thiow Keng Tan

It is certified that error appears in the above-identified patent and that said Letters Patent is hereby corrected as shown below:

Title page,
Item [56], **References Cited**, U.S. PATENT DOCUMENTS, insert the following:

--	5,500,673	3/1996	Zhou
	5,548,322	8/1996	Zhou
	5,596,362	1/1997	Zhou
	5,852,669	12/1998	Eleftheriadis et al.
	5,946,040	8/1999	Kato et al.
	5,978,514	11/1999	Yamaguchi et al. --

FOREIGN PATENT DOCUMENTS, insert the following:

--	EP	372970	6/1990
	EP	707427	4/1996
	EP	810532	12/1997 --

Signed and Sealed this

Seventh Day of June, 2005

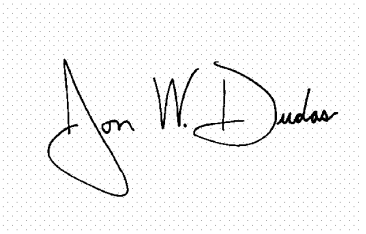

JON W. DUDAS
Director of the United States Patent and Trademark Office