CONSUMER APPLICATIONS OF THE IEEE 1394 SERIAL BUS, AND A 1394/DV VIDEO EDITING SYSTEM

Alan T. Wetzel, Michael R. Schell*

Texas Instruments, Inc., Dallas, Tx.
*Interactive Images, Inc., Colorado Springs, Co.

Copyright 1996 by The Institute of Electrical and Electronic Engineers, Inc.

Reprinted by permission of the IEEE.

This paper was prepared for and presented at the International Conference on Consumer Electronics held in Chicago, Ill., June 1996, conference session WPM-6, Intelligent Home Networks.

CONSUMER APPLICATIONS OF THE IEEE 1394 SERIAL BUS, AND A 1394/DV VIDEO EDITING SYSTEM

Alan T. Wetzel, Michael R. Schell*

Texas Instruments, Inc., Dallas, Tx.
*Interactive Images, Inc., Colorado Springs, Co.

ABSTRACT

The IEEE 1394-1995 High Performance Serial Bus [1] has been created with consumer use in mind. Some of the more important features of the base standard are reviewed. Enhancements and additions to the standard to support new consumer applications, such as MPEG-2 transport and the new Digital Video (DV) tape format, are described. Consumer DV products incorporating 1394 are now on the market, more have been announced, and related developments portend even more in the future. The HD-DVC "DV" [2] system has features which have significant advantages for video editing systems. The 1394 interface used by DV equipment brings many benefits to a video editing system. A PC based nonlinear video editing system is described, which takes advantage of the combination of DV and 1394 features in a high performance, low cost implementation.

WHY CONSUMERS WILL BE WINNERS WITH 1394

Superior digital quality and performance at low cost

The most obvious benefit seen by consumers in the shift to digital technologies is the improvement in quality. This has been true for some time with audio CDs, as well as the newer DBS systems. This is now becoming true again with the new HD-DVC "DV" (digital video) tape systems. The digital recording and playback, combined with the digital 1394 interface, completely eliminates the noise pick-up and signal losses that occur in analog systems and interconnects. The digital record/playback avoids the audio flutter and video picture jitter that is common in present analog systems. The 1394/DV combination also provides for virtually lossless audio/video editing and dubbing. This recognition of the superior quality of the all-digital systems has resulted in an unprecedented demand for products.

The 1394 serial bus interface is designed to support these digital devices, both from the user experience and feature/cost points of view. The 1394 interface has been completely implemented in generic digital ASIC CMOS silicon processes. Multiple integration possibilities exist, from today's first generation, multi-chip architectures, to single-chips, to full integration (zero additional chips) into other ASIC chips. Full ASIC integration is a key benefit to reducing circuit board space requirements in space critical applications. As the silicon processes evolve to smaller feature sizes, the area required to implement the 1394 logic will also decrease.

Hassle-free hook-up

The first, and perhaps only, 1394 item that a consumer is likely to encounter is the plug and cable. A user-friendly connector and cabling system is fundamental to 1394. The cable

assemblies feature small and durable connectors. The plugs and sockets are designed for ease of use. The shape of the connector nose and socket opening provide unambiguous tactile feedback, which facilitates frustration-free blind insertion. A very flexible cable, less than ¼ inch in diameter, is standard. This system has been evolved from the child-proof connectors used by the Ninetendo Game Boy.

The second thing that a consumer is likely to notice about the 1394 interconnect system is the freedom from connection constraints. Because 1394 is a bus, with all devices sharing the same transmission domain, it is irrelevant as to which way the different pieces of equipment are connected together. Because all the digital signals for a particular piece of equipment can be carried on the same 1394 cable, only one connection is required for any unit. There is no in-out or up-down direction sense in 1394, so the connectors at each end of the cable will generally be the same. And it makes no difference which socket is used on a particular device, since they are all equivalent.

One of the many things the consumer will probably not notice is the automatic configuration and management that is built in to 1394. The user does not have to set any configuration switches because the node IDs are assigned automatically during 1394 bus initialization. And no special device needs to be provided or designated as a central controller or bus manager.

CONSUMER ORIENTED FEATURES OF THE IEEE 1394 SYSTEM

The 1394 connector and cabling system

Two connector and cable systems are presently defined. The original 6-pin/6-conductor style contains two shielded twisted pairs for data, plus another pair for optional power and ground. The 6-pin system uses a detent or optional latching retention system. A newer and smaller 4-pin/4-conductor system was developed for use on digital camcorders and other size sensitive applications. It has the two twisted pairs for data signaling, but eliminates the optional power and ground pair. Both cables have overall shielding. The connectors for the two cable systems are shown in Fig 1.

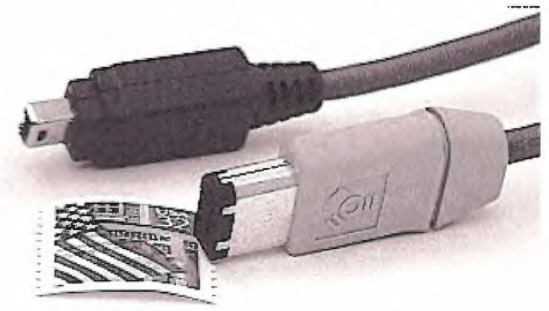

Fig 1: The 1394 connectors

Unconstrained interconnect

The topology of a 1394 bus may be a simple daisy-chain, a tree, a star, or a combination of these. The 1394 standard indicates that the most widely separated devices should have no more than 16 cable hops between them, but in reality the generous margins designed in to the 1394 system ensures that nothing breaks even if this limit is exceeded.

Automatic configuration

During initialization, each device on the 1394 bus takes a turn to announce its configuration and capabilities, and acquires a unique node ID. This process of bus enumeration and device ID assignments is handled completely automatically, and provides support for Plug-and-Play compatibility.

All 1394 devices have the capability of being the root, which is a simple function to resolve

bus arbitration requests and grants. This means that no special device must be included to initialize or manage the operation of any 1394 bus. This is a significant difference from some other busses which require a central processor running dedicated real-time processes for management and control. In a similar fashion, any isochronous-capable consumer device is able to function as the cycle master, which regulates the isochronous cycles.

The distributed intelligence that handles the initial configuration and root arbitration functions is contained entirely within the 1394 physical layer. This allows a device to be an active member of a bus even if its higher layer (link and above) functions are not active. By eliminating the need for higher layer activity the process is much faster, and power saving strategies can be realized. The implementation of these physical layer functions is purposefully simple enough to allow it to be built as a small state machine. Hardware implementation also contributes to the speed of configuration. Because most of the 1394 functionality is implemented in silicon, the cost for 1394 will continue to drop as die size scales down with smaller process sizes.

Isochronous "real-time" channels

Besides scaling the 1394 implementation costs with each successive generation of silicon processes, the 1394 system provides a special feature to minimize the system complexity and costs. This feature is isochronous data transport.

The 1394 Serial Bus provides two distinct modes of operation, asynchronous and isochronous. The bus alternates between these two modes of operation, with isochronous operation taking precedence over asynchronous communication. Isochronous operation occurs at a cycle rate of 8,000 times per second.

Under normal circumstances the isochronous operation may take up to 80% (100 μsec) of the available cycle time, reserving at least 20% for asynchronous traffic. The asynchronous data delivery and verification is assured by an acknowledge and retry protocol, and is normally used for control, status, and accuracy-critical data.

Isochronous data delivery is a "just in time" type of service. Data is broadcast on assigned channels with guaranteed bandwidth or time allocations. Delivery of preallocated real time data packets, at a uniform rate, is built into the 1394 protocol.

Up to 64 isochronous channels may be allocated on the 1394 Serial Bus. All allocated channels can send their data during each isochronous cycle. Only one device may transmit data on a given channel, but any number of devices may listen to a particular channel.

A major advantage of isochronous transport is that a much smaller FIFO is required for buffering the video and audio data before and after transmission across the 1394 bus. Because the bandwidth and latency are guaranteed, the 1394 interface silicon can use a minimally-sized FIFO memory, which reduces the die size and the ultimate product cost to the consumer. Non-isochronous transport systems require significantly larger FIFO memories to accommodate the wide swings in data-rates or transport delays.

ENHANCEMENTS AND EXTENSIONS TO IEEE 1394

MPEG-2 transport

The MPEG-2 System standard, ISO/IEC 13818-1, Part 1 [3] assumes that the transmission system for transporting packets has a constant delay characteristic. The maximum deviation or jitter allowed is 500 nanoseconds. This limit is a significant

challenge to any shared access system, including 1394.

Two primary factors may contribute to variations in delivery delay of 1394 isochronous packets: 1) Delays in starting an isochronous cycle, and, 2) Changes in the order in which channels (packets) are transmitted. Cycle start delays can be caused by an asynchronous transaction being active at the time when cycle start should occur. With a maximum sized asynchronous packet this delay can be approximately 75 microseconds. The ordering of isochronous channels in any particular cycle is unlikely to change unless there is a change in bus configuration, or in bus utilization. The worst case would be for a channel's packet to move between the beginning and end of the 100 microsecond transmission window of the isochronous cycle.

In order to meet this MPEG-2 jitter requirement, a technique was developed that allows cancellation of almost all of the 1394 induced packet delivery jitter. This technique takes advantage of the fact that all nodes participating in isochronous traffic share a common time reference. The cycle start packets that signal the beginning of an isochronous cycle also include the current value of the master clock. This clock is based on the basic 1394 reference frequency of 24.576 MHz.

When an MPEG-2 transport packet is received by a 1394 device, the current 1394 system time value is prefixed to the transport packet. This time stamp is one quadlet, or four bytes of data. At the receiving end of the 1394 transport system, the 1394 time stamp is removed, and is compared to the current system time. By passing the transport packets to the destination device at a constant offset from system time, the original temporal relationship between the packets will be restored. This eliminates 1394 transport jitter to the resolution of two 1394 clock periods, or $2 \times 1/(24.576 \times 10^6) = 81.41$ nanoseconds.

A proposed addition to the MPEG2 standards, Extensions for real time interfaces for system decoders [4] has clarified transport stream jitter measurements and suggested a more generous limit. The new transport jitter limit is 25 microseconds, measured peak-to-average (or 50 μsec peak-peak). The 1394 time stamping system provides jitter cancellation capabilities that account for less than 1/6 of 1% of this proposed limit, so 1394-induced jitter effectively can be ignored.

The CIP header system

As part of the development of the 1394 time stamping and jitter canceling functions, a standardized formatting of the data was developed. This has been named the Common Isochronous Packet, or CIP, header. The CIP header is an extensible format that can be adapted for future applications as they arise. Today there are sets defined for the SD, HD and SDL formats of the DV tape systems, along with MPEG-2 transport packets as used by the DVB and ATV digital television systems. These formats are defined in the HD DVC "Blue Book."

In addition to the previously described time stamping function, the CIP header system also supports a number of other system functions. The two most notable of these are the Plug Control Register, or PCR, and the Function Control Protocol, or FCP. The specifications for both of these, together with the associated Connection Management Protocol (CMP), also are covered in the HD-DVC "Blue Book."

The purpose of PCR/CMP is to provide a method for controlling the virtual connection between transmitting and receiving devices on a 1394 bus. Two primary functions are: 1) To prevent active connections from being accidentally broken, and 2) To permit broadcasting devices with no listeners to be turned off. In the first case, a listener can register with the sender, and the sender knows not to stop as long as the connection is

active. In the second case, a broadcasting device is able to tell when there are no listeners, so it can stop sending and release its allocated bandwidth and channel.

The Function Control Protocol (FCP) and its related AV/C Command and Transaction Set provide for a standardized register location where information can be obtained as to what control languages are understood by a particular device. At present two values are defined, one for the AV/C language used by DV tape systems, and the other for the Common Application Language (CAL) of CEBus.

The relation between the 1394 protocol stack and the HDDV-DVC layers is shown in Fig 2. The areas delineated by the dashed lines designate the sections of the "Blue Book" that deal with the 1394 interface.

Longer and faster

The specifications for the cables used in 1394 are based on electrical performance. An example given as a reference in the standard is suitable for use over the full range of signaling speeds (100 Mbit/s base rate, plus the 200 and 400 Mbit/sec options) at a length of up to 4.5 meters. A slightly larger and lower loss cable has been developed which may be used to increase the distance per hop into the 15-20 meter range.

Restricting the maximum signaling frequency also allows a given cable to be used at a greater length. For consumer use, the 200 Mbit/sec optional speed appears to provide more than adequate performance and has

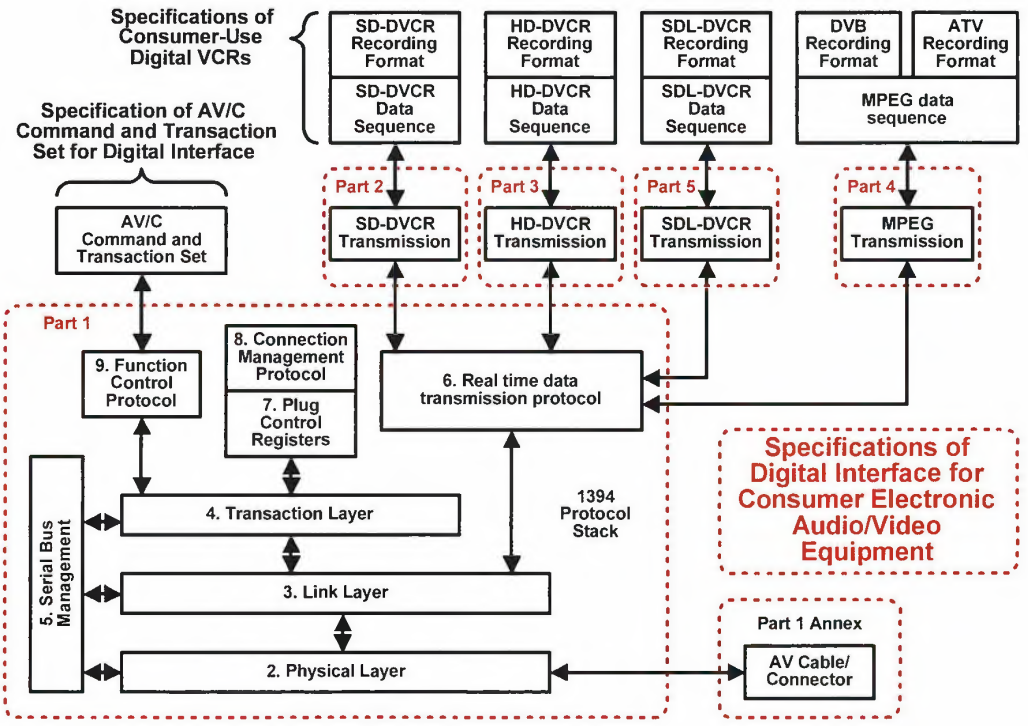

Fig 2: Relation of 1394 Protocol Stack to HD-DVC Blue Book

been specified as the maximum signaling rate supported by the HD-DVC specification. This also allows for smaller cables to be used for any particular distance.

Even with these types of cable enhancements and signaling rate compromises it is still difficult to extend the reach of a single 1394 cable hop into the 25-50 meter range needed for a home or small office network. The use of active signal repeaters is a simple solution for certain situations. A repeater is nothing more than a two port physical layer device, with no link or higher layers, that is a fully compliant node in the network. However, the use of repeaters in permanently installed and inaccessible wiring is problematic.

A number of alternative physical layers and configurations have been examined for longer distances. One very important parameter that should be considered when increasing the distances within a single 1394 bus is the likely inclusion of a larger number of devices than would be found in a typical local equipment cluster. A larger number of devices on the bus raises the prospects for running out of isochronous bandwidth to support all the desired applications. Another consideration is the arbitration signaling and gap (idle) time. The longer the end-to-end distance, the longer one must wait for arbitration and acknowledgment round trip delays. Longer wait times translates to more timing overhead or lower efficiency.

For these reasons it is believed that most longer distance 1394 networks will benefit from being arranged as separate (local cluster) busses connected by bridges or routers. Traffic belonging to one bus is not seen by any others unless specifically addressed to another bus. The performance of each separate local cluster bus may also be independently optimized.

The addressing scheme used in 1394 allocates 10 bits for bus_ID, 6 bits for node_ID, and 48 bits for internal device addresses. This translates to a maximum 1023 busses, each having up to 63 nodes (the all-1's addresses are reserved for broadcast purposes). The protocols for managing bridges was purposefully not included in the base IEEE standard in order to avoid unnecessary delays. Work to define bridging/routing started in 1995 as a working group project within the 1394 Trade Association [5]. It is expected to become an authorized project of the IEEE mid-year 1996 [6].

One of the proposed features of the bridge definition work is the concept of an extended bridge. In its simplest implementation this could be a pair of "half bridges" separated by some longer distance point-to-point link. Possible links for the extended bridge include unshielded twisted pair (UTP), plastic optical fiber (POF), coax, or wireless. Distance capabilities are expected to be at least 50 meters.

In addition to this work to define bridges for 1394, work has also started to define a new gigabit rate physical layer and protocol. This work also started as a working group within the 1394 Trade Association, and is also expected to become an authorized project of the IEEE mid-year 1996[7]. The gigabit physical layer and protocol will provide a backbone supporting multiple standard 1394 busses through bridges. The goals are a minimum distance of 25 meters, and that the interface will look and behave the same to the user as the present 1394 bus.

PRODUCTS USING 1394

DV camcorders

In the fall of 1995 Sony introduced two DV camcorders, the DCR-VX1000 and DCR-VX700. Both of these units meet the HD-DVC requirements for SD (525-60 and 625-50 systems) format digital camcorders. Both models include a 1394 based DV digital interface. This allows for virtually lossless audio/video dubbing and editing. Many other manufacturers also have introduced DV

camcorders, and several have announced that future units will include the 1394/DV interface.

DV VCR tape decks

In April 1996 Sony introduced its DHR-1000 digital VCR deck companion to its DV camcorders. This unit, currently available in Europe, includes a single front-panel 1394/DV connector.

D-VHS VCR

JVC has announced the finalization of the specifications for D-VHS, Standard Mode [8]. 1394 has been adopted as the digital interface for this system. This technology offers bit stream recording of compressed digital data in a variety of formats, such as those used by Digital Broadcast Satellites (DBS).

Desktop camera

Sony has introduced the CCM-DS250 desktop video camera [9] which utilizes a single standard (6-pin) 1394 cable to provide the complete camera connection to a PC adapter card. The camera is powered through the 1394 cable. Camera command and status messages are carried as asynchronous packets interleaved with the isochronous packets of uncompressed video data. This camera supports a wide range of operating modes with options for resolution, frame rate, and color depth. A 100 Mbit/sec 1394 interface easily supports this camera operating in a 320 x 240, 30 frames/sec, 16 bit/pixel (YUV 4:2:2) mode. The command and register format specifications have been documented by a working group of the 1394 Trade Association.

Digital video editing system

miro Computer Products AG has announced [10] a licensing agreement with Sony Corporation to develop 1394 based desk-top video editing products for the PC. This action is "designed to bridge the gap between the highly successful DV format camcorders and the non-linear editing world of desktop video."

Truevision has announced a DVCPRO version of TARGA 2000 RTX digital video engine [11] that includes a 1394 interface. DVCPRO is Panasonic Broadcast & Television Systems Company's implementation of DV with a different recording (but not data) format. The new adapter card provides non-linear editing and real time 2D effects processing of DV-encoded data on a desktop system.

Digital still image capture board

Sony has introduced a digital still image video capture board, the DVBK-1000 [12], as a companion to its DV camcorders. This ISA adapter card features a 1394 interface to Sony's consumer DV camcorders.

Set top boxes and digital television

The Digital Audio Visual Interface Council (DAVIC) has been working to define a common set top box architecture. A technical subcommittee of DAVIC is considering the addition of 1394 as the "external A0" interface for the DAVIC 1.1 specification The Digital Video Broadcasting (DVB) Project is defining standards for digital television broadcasts, and a subcommittee is considering 1394 for the digital interface to digital televisions and peripherals. The EIA R-4.1 subcommittee of the R-4 Television systems committee has selected 1394 as the basis for the digital interface for US-ATV digital television systems. All of the above items are drafts or work in progress, so should not be assumed to be finalized. A recent specification from TELE-TV for a set top box includes a reference to the DAVIC architecture, and includes a requirement for a 1394 interface.

PCs and motherboards

Several major manufacturers of computers and related hardware and software have announced support of 1394 [13]: Adaptec,

Cirrus Logic Inc., IBM PC Company, Microsoft Corp., Sun Microsystems, and Texas Instruments Mobile Computing Business.

At the April 1, 1996, WinHEC (Windows Hardware Engineering Conference) Microsoft Corp. announced the Simply Interactive PC (SIPC) [14] which will allow the PC platform to be the "center of entertainment, communications and productivity in both home and office." One of the keys technologies to SIPC is 1394, which will provide users with low-cost, easy-to-install peripherals. Endorsement for SIPC [15] has been given by Adaptec Inc., Compaq Computer Corp., Gateway 2000 Inc., Hewlett-Packard Co., Intel Corp., and Toshiba Corp.

Apple Computer has announced [16] that its Pippin 1997 reference platform will include 1394 for consumer product connectivity. Apple also plans to include 1394 on selected computer systems in 1997, and across the entire product line in 1998. The Mac OS is expected to include 1394 support in the first half of 1997.

1394/DV VIDEO EDITING

The advantages of 1394/DV in video editing

1394 and the DV (Digital Video) standard promise to revolutionize video editing over the next 3-5 years. Compared to the current analog/JPEG video editing systems now widely used, 1394/DV offers superior video quality at a lower, constant data-rate, smaller tape size, fewer tape drop-outs, built-in data archiving, guaranteed audio-video synchronization, virtual elimination of dropped frames, and file interchangeability. These advantages hold the promise of bringing professional digital video editing to the high-volume consumer market.

DV, a new video compression standard, does not contain the bi-directional and predictive frames of MPEG-2, so editing boundaries may be at any frame. DV produces a fixed data-rate of approximately 3.6 MBytes/sec, utilizing a fixed 5:1 compression based on 4:1:1 YUV video sampling. DV compression relies on discrete cosine transform like JPEG and MPEG, but adds the enhancement of field interpolation on low-motion scenes. This interpolation, as well as other enhancements, produces video which many observers say is equivalent to Sony Betacam SP which has been JPEG compressed at 2.5:1. Therefore, DV produces equivalent video quality to JPEG, but at about a 30% lower data-rate.

The DV data is stored on a new, smaller evaporated-metal tape specifically designed for digital data. This new tape uses a 10 micron track (versus VHS at 50 microns) and can store 60 minutes of video and audio (over 15 GBytes of data) on a tape which is about 75% the size of an 8mm cassette. Prior to writing to this DV tape, error detection and correction bits are added to the data stream. Additionally, the digital data is interleaved across the tape within a single frame. These techniques greatly reduced dropouts and other tape artifacts commonly found in 8mm and other analog formats.

In addition to excellent video and audio quality, the 1394/DV system provides built-in data archiving. After creating a video tape using a typical analog/JPEG system the editor may wish to save the video clips on a digital tape for long-term archiving. This often requires the added cost of a high capacity tape drive (e.g. Exabyte) and tape. With a 1394/DV system the user can simply use the built-in digital storage capability of the DV cassette for archiving.

The constant digital data-rate (3.6 MBytes/sec) of the 1394/DV system eliminates the problems associated with JPEG data-rate bursts. JPEG is a "constant quality, variable data-rate" algorithm. The compressed data-rate from a JPEG system can easily vary by a factor of 4:1, depending on the complexity of the image. These data-rate bursts cause

dropped video frames if the data-rate exceeds the capability of the disk I/O subsystem. On the other hand, the constant 3.6 MByte data-rate of a 1394/DV system is well within the capabilities of a modern SCSI disk system, virtually eliminating dropped frames.

Finally, 1394/DV systems will support file interchangeability. In most analog/JPEG systems the JPEG data stream parameters are proprietary to a given manufacturer. However, the DV data stream is well defined and a widely accepted standard within all DV camcorder products. This includes Panasonic's DVCPRO and Sony's DVCam professional products. This means that video footage shot on a high end professional camcorder can be played or edited on a consumer DVCR tape deck or on a consumer 1394/DV editing system.

Early drafts of the DV "Blue Book" specification defined the tape format and the video compression algorithm, but not a digital interface or data transport protocols. While several digital video transport protocols such as parallel and serial D1 were well known, these protocols were soon recognized as too complex and too expensive for a consumer application. 1394 with its bandwidth of 100 Mbits/sec or greater, guaranteed isochronous delivery of data, low-cost interconnect and relatively simple silicon implementation was quickly identified as the best overall choice for the digital transport of DV data. Accordingly, 1394 was added to the final 1996 "Blue Book" specification and has been widely accepted as the digital standard for DV transport.

A proposed 1394/DV editing card

A software based 1394/DV editing system can be easily created on a Pentium class PC with the addition of a 1394 adapter card and a fast disk subsystem. A fast disk subsystem, such as SCSI, is required to meet the 3.6 Mbytes/sec DV data-rate. While functional, such a system would be extremely slow as each video effect would be rendered entirely in software.

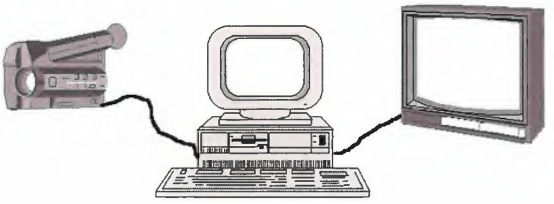

Fig 3: A PC based 1394/DV video editing system

The creation of a video effect, such as titling, picture-in-a-picture, dissolves or wipes, requires the decompression, and ultimately the re-compression of each video frame involved in the video effect. Each frame of rendered video typically requires the decompressions of two video source frames, and the re-compression of the final video frame. This decompression and re-compression can be performed in hardware or software.

In a software based solution, the time required for a decompression or compression of a frame of video is approximately one second. Each second of video is made up of 30 frames of video. Therefore, producing a one second video effect will take about 90 seconds of CPU time just for the decompression and compression: Decompression of two source frames plus compression of the rendered frame. A hardware codec (compressor-decompressor) card, on the other hand can perform each required compression or decompression in approximately 33 milliseconds - a 30X improvement over software.

The diagram in Fig 4 shows a proposed hardware based 1394/DV adapter-codec. The product uses a 1394 link layer controller and physical layer interface to connect to the camcorder via a 1394 cable. The DV data is moved across the CPU bus via a PCI controller. A DV codec (DVCPRO or equivalent) chip set is used to compress or

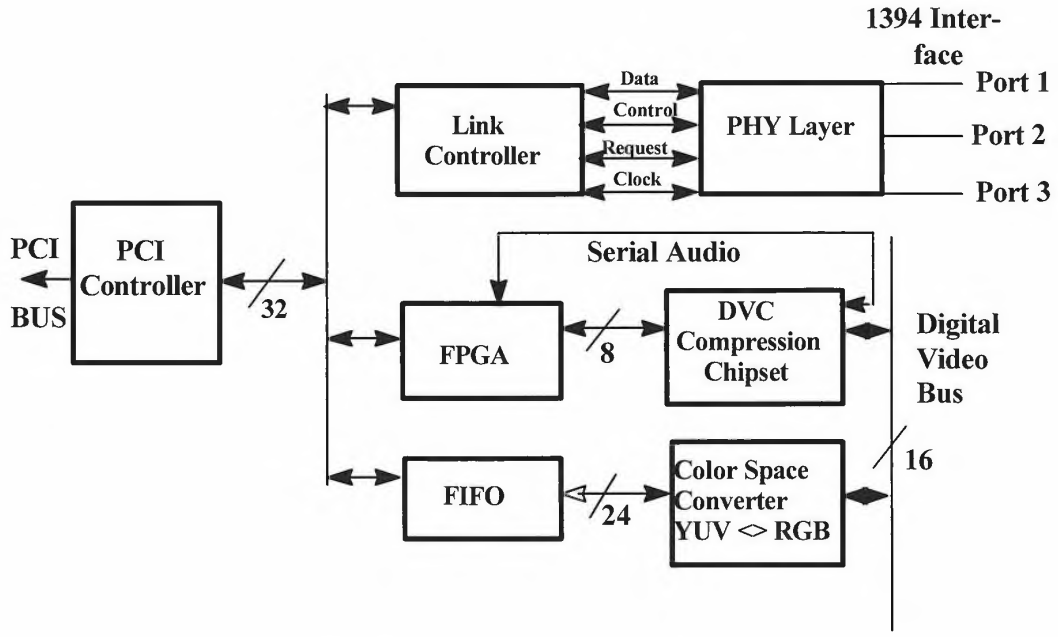

Fig4: 1394/DV adapter-codec block diagram

decompress the DV data at full video rates of approximately 33 milliseconds per frame for rendering or display operations. The color space converter transforms between the uncompressed YUV video data from the color space of the camcorder to the RGB color space of the computer for rendering operations. The FIFO is used to buffer this RGB data prior to transport across the PCI bus.

This design uses an FPGA (Field Programmable Gate Array) to control the flow of video and audio data within the card. Additionally, the PCI controller must be bus master capable to maximize PCI bus bandwidth and to minimize dependencies on the interrupt latency of the CPU. Ring zero software drivers are mandatory to enhance overall system performance. Actual render times using this hardware design is expected to be 30 to 40 times faster than a software only solution.

The 1394/DV system is expected to become the de facto consumer video editing standard in the next 3-5 years. While software based editing solutions hold the promise of extremely low-cost entry solutions, the time required to create video effects will motivate most users to move up to a hardware based adapter-codec card.

CONCLUSION

1394 is rapidly gaining acceptance as the interconnect standard for digital consumer (as well as professional) video and audio equipment. 1394's simple, low cost cabling, interface chip integration and high speed data transport make it a natural for MPEG-2 based set-top boxes, camcorders and video editing. 1394/DV provides numerous compelling advantages over the current analog/JPEG method, including superior video and audio quality, built-in archiving and guaranteed audio/video synchronization. Undoubtedly,

1394 will find applications in many diverse consumer applications.

BIOGRAPHIES

Alan Wetzel is a Senior Member Technical Staff at Texas Instruments, Inc., Dallas Texas. He received a BSEE from Northwestern University, and an MSEE from Southern Methodist University. He has worked as an IC designer, design manager, and product specialist in numerous fields at TI including consumer, automotive, data storage and data transmission, and communication systems. Several of his products have been in production for over 25 years. His present assignment is with the 1394 Product Development Team, a part of the Computer and Computer Peripheral Products organization.

Michael Schell is President and founder of Interactive Images of Colorado Springs, CO. He has an extensive background in both analog and digital circuit design and was the hardware architect for the company's first digital video editing product, the Plum. Michael holds a BSEE from SMU and was a IC designer for Motorola and a Static Ram Device engineer for INMOS. He has authored over 20 technical articles in digital design. He is an ardent supporter of DV and 1394 technology.

REFERENCES

1 IEEE 1394-1995: Standard for a High Performance Serial Bus.

2 HD Digital VCR Conference "Blue Book" Specification, 1996.

3 ISO/IEC 13818-1, Information Technology - Generic coding of moving pictures and associated audio information, Part 1: Systems.

4 ISO/IEC DIS 13818-9, Draft International Standard for Information Technology - Generic coding of moving pictures and associated audio information, Part 9: Extensions for real time interface for systems decoders.

5 1394 Trade Association, c/o Skipstone, Inc., http://www.firewire.org.

6 IEEE Project Authorization Request: High Performance Serial Bus Bridges.

7 IEEE Project Authorization Request: A Scaleable Gigabit Extension to 1394 Serial Bus.

8 http://www.jvc-victor.co.jp/dvhssd-e.html.

9 http://www.sony.co.jp/ProductsPark/JAPAN/Professional/Camera/CCM-DS250-j.html

10 Business Wire, April 15, 1996: "miro Computer Products AG is Granted License for Sony DV Codec Source Code ..."

11 NAB, Las Vegas, April 16, 1996 release, see http://www.truevision.com/PRs/DVCPRO.html.

12 http://www.sony.co.jp/Exhibition/DVCap/index.html.

13 Microsoft, et al. press releases dated circa Jan. 8, 1996.

14 PR Newswire, April 1, 1996: "Microsoft unveils Simply Interactive PC framework."

15 Infoworld, April 1, 1996, p 1: "Developers rally behind new PC design."

16 PR Newswire, May 13, 1996: "Apple Plans to Put 1394/Firewire Inside Products, Aggressive Plans for Breakthrough Technology Revealed.".