US007412643B1

(12) **United States Patent**
Fischer et al.

(10) **Patent No.: US 7,412,643 B1**
(45) **Date of Patent: Aug. 12, 2008**

(54) **METHOD AND APPARATUS FOR LINKING REPRESENTATION AND REALIZATION DATA**

(75) Inventors: **Uwe Fischer**, Schoenaich (DE); **Stefan Hoffmann**, Weil im Schoenbuch (DE); **Werner Kriechbaum**, Ammerbuch-Breitenholz (DE); **Gerhard Stenzel**, Herrenberg (DE)

(73) Assignee: **International Business Machines Corporation**, Armonk, NY (US)

(*) Notice: Subject to any disclaimer, the term of this patent is extended or adjusted under 35 U.S.C. 154(b) by 0 days.

(21) Appl. No.: **09/447,871**

(22) Filed: **Nov. 23, 1999**

(51) **Int. Cl.**
G06F 17/00 (2006.01)
G06F 3/00 (2006.01)
G10L 15/00 (2006.01)

(52) **U.S. Cl.** **715/200**; 715/201; 715/234; 715/730; 704/246; 704/251

(58) **Field of Classification Search** 715/500.1, 715/501.1, 513, 730, 804; 345/723, 730; 704/246, 251, 260
See application file for complete search history.

(56) **References Cited**

U.S. PATENT DOCUMENTS

5,649,060 A * 7/1997 Ellozy et al. 704/278
5,737,725 A * 4/1998 Case 704/260
5,857,099 A * 1/1999 Mitchell et al. 704/235
5,929,849 A * 7/1999 Kikinis 725/113
5,963,215 A * 10/1999 Rosenzweig 345/649
6,076,059 A * 6/2000 Glickman et al. 704/260
6,098,082 A * 8/2000 Gibbon et al. 715/501.1
6,172,675 B1 * 1/2001 Ahmad et al. 715/500.1
6,243,676 B1 * 6/2001 Witteman 704/243
6,249,765 B1 * 6/2001 Adler et al. 704/500
6,260,011 B1 * 7/2001 Heckerman et al. 704/235
6,263,507 B1 * 7/2001 Ahmad et al. 725/134
6,271,892 B1 * 8/2001 Gibbon et al. 348/700
6,282,511 B1 * 8/2001 Mayer 704/270
6,336,093 B2 * 1/2002 Fasciano 704/278

(Continued)

FOREIGN PATENT DOCUMENTS

JP 2000-138664 5/2000

(Continued)

OTHER PUBLICATIONS

Gibbon et al., "Generating Hypermedia Documents from Transcriptions of Television Programs Using Parallel Text Alignment", AT & T Labs Research, Feb. 1998, pp. 26-33.*

(Continued)

Primary Examiner—William Bashore
Assistant Examiner—Maikhanh Nguyen
(74) *Attorney, Agent, or Firm*—Scully, Scott, Murphy & Presser, P.C.; Lisa M. Yamonaco

(57) **ABSTRACT**

A method and apparatus for creating links between a representation, (e.g. text data,) and a realization, (e.g. corresponding audio data,) is provided. According to the invention the realization is structured by combining a time-stamped version of the representation generated from the realization with structural information from the representation. Thereby so called hyper links between representation and realization are created. These hyper links are used for performing search operations in realization data equivalent to those which are possible in representation data, enabling an improved access to the realization (e.g. via audio databases).

14 Claims, 7 Drawing Sheets

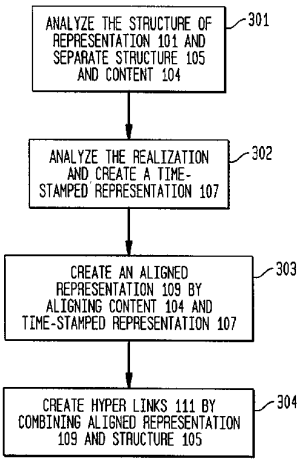

Amazon v. Audio Pod
US Patent 9,319,720
Amazon EX-1048

U.S. PATENT DOCUMENTS

6,357,042	B2 *	3/2002	Srinivasan et al.	725/32
6,404,978	B1 *	6/2002	Abe	386/55
6,434,520	B1 *	8/2002	Kanevsky et al.	704/243
6,462,754	B1 *	10/2002	Chakraborty et al.	345/723
6,473,778	B1 *	10/2002	Gibbon	715/501.1
6,603,921	B1 *	8/2003	Kanevsky et al.	386/96
6,636,238	B1 *	10/2003	Amir et al.	345/730
6,728,753	B1 *	4/2004	Parasnis et al.	709/203
6,791,571	B1 *	9/2004	Lamb	345/619
2001/0023436	A1 *	9/2001	Srinivasan et al.	709/219
2002/0059604	A1 *	5/2002	Papagan et al.	725/51

FOREIGN PATENT DOCUMENTS

JP	2001-111543	4/2001
JP	2001-313633	11/2001

OTHER PUBLICATIONS

Amir et al., "CueVideo: Automated video/audio indexing and browsing", IBM Almaden Research Center, ACM, 1996, p. 326.*

Favela et al., "Image-retrieval agent: integrating image content and text", CICESE Research Center, IEEE, Oct. 1999, pp. 36-39.*

S. Srinivasan et al., "What is in that video anyway?": In Search of Better Browsing, 6th IEEE Int. Conference on Multimedia Computing and Systems, Jun. 7-11, 1999, Florence, Italy, pp. 1-6.*

D. Ponceleon et al., "Key to Effective Video Retrieval: Effective Cataloging and Browsing," Proceedings of the 6th ACM International Conference on Multimedia, 1998, pp. 99-107.*

* cited by examiner

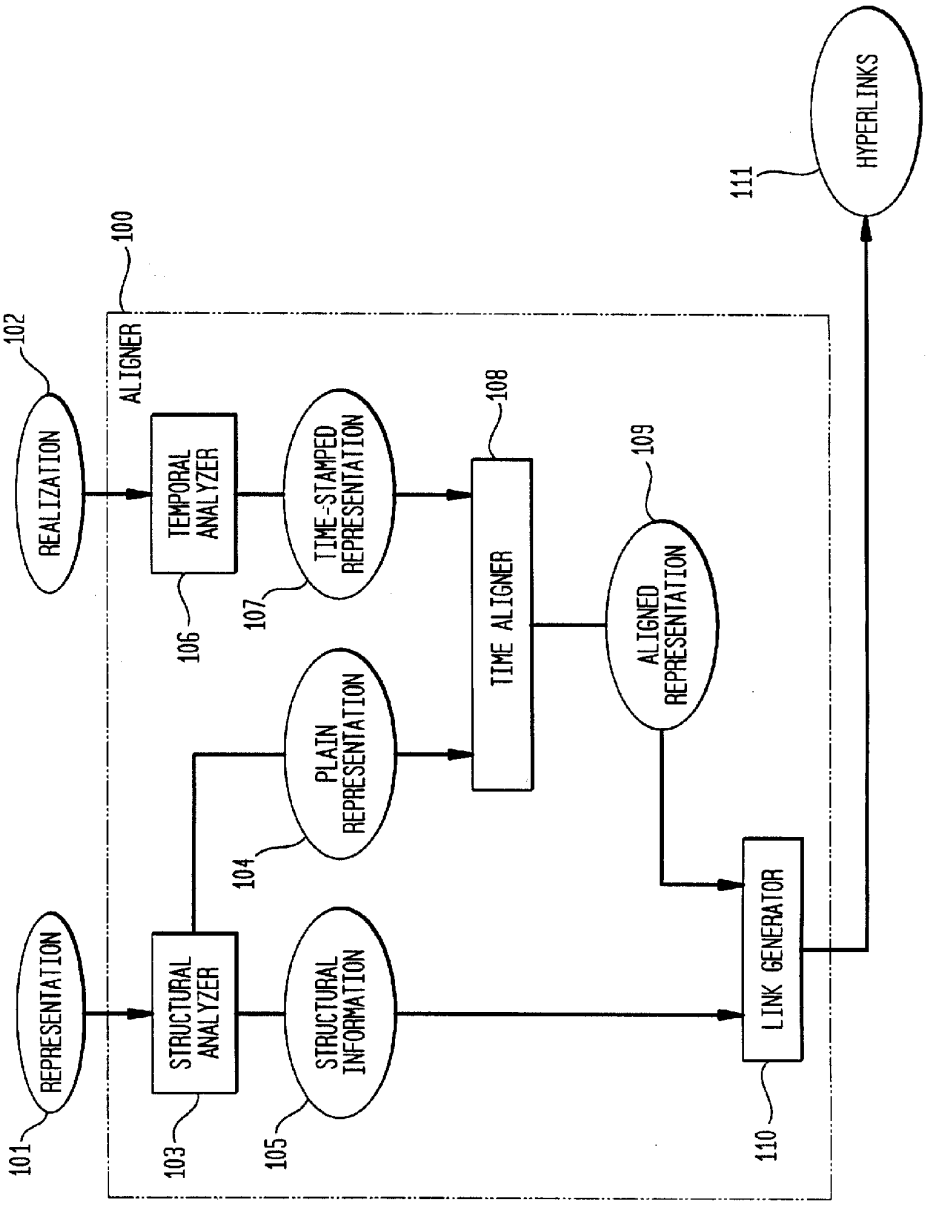
100
ALIGNER
101
REPRESENTATION
102
REALIZATION
103
STRUCTURAL ANALYZER
104
PLAIN REPRESENTATION
105
STRUCTURAL INFORMATION
106
TEMPORAL ANALYZER
107
TIME-STAMPED REPRESENTATION
108
TIME ALIGNER
109
ALIGNED REPRESENTATION
110
LINK GENERATOR
111
HYPERLINKS

FIG. 1

FIG. 2

```
<!DOCTYPE book system "book.dtd" [
<!ENTITY % ISOlatl system "isolatl.ent">
  %ISOlatl;
]>
<book>
<chapter>
<heading>Key Note Speech</heading>
<section>
<p><a>
Its a great honor for me to share this stage with the Lord Mayor and Chief
Executive of Hanover; Mr. Jung; and in a few minutes, Chancellor Kohl.</a><a> I've
been looking forward to this evening for a long time, because I've known for many
years how important CeBIT is to the global information technology industry.</s></p>
```

101

FIG. 4

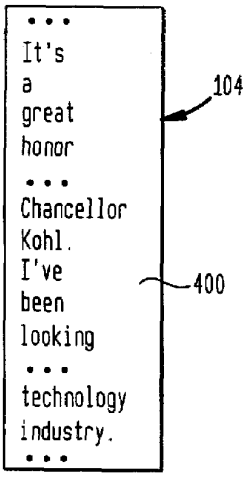

FIG. 6

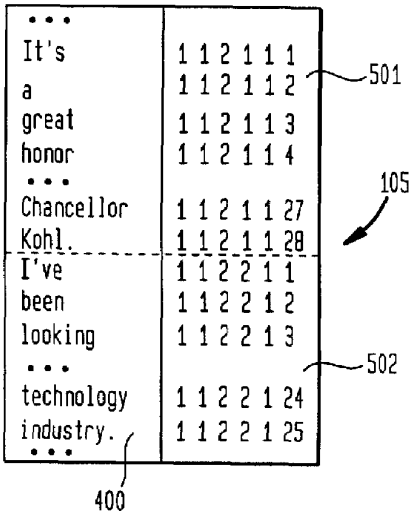

FIG. 3

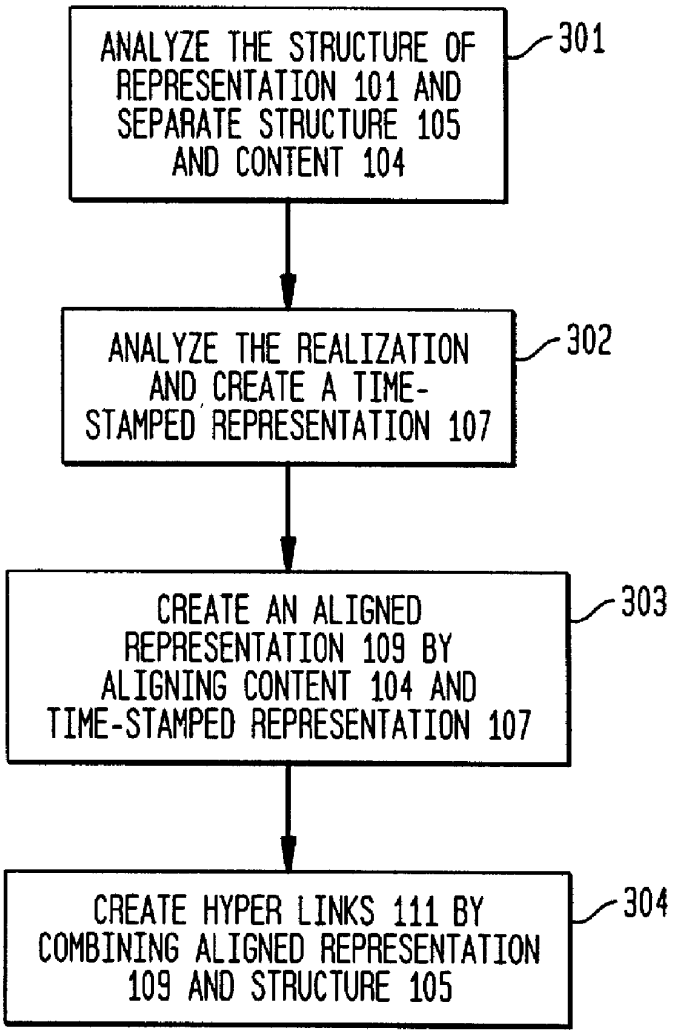
ANALYZE THE STRUCTURE OF REPRESENTATION 101 AND SEPARATE STRUCTURE 105 AND CONTENT 104
301
ANALYZE THE REALIZATION AND CREATE A TIME-STAMPED REPRESENTATION 107
302
CREATE AN ALIGNED REPRESENTATION 109 BY ALIGNING CONTENT 104 AND TIME-STAMPED REPRESENTATION 107
303
CREATE HYPER LINKS 111 BY COMBINING ALIGNED REPRESENTATION 109 AND STRUCTURE 105
304

FIG. 5

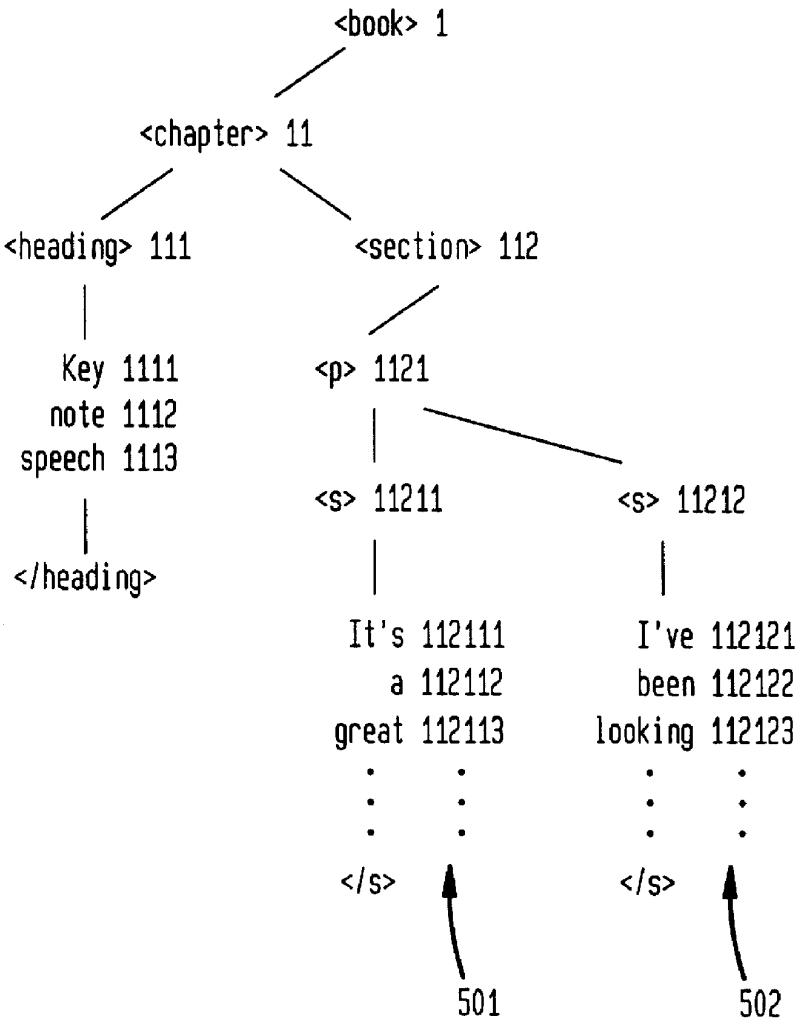
<book> 1
<chapter> 11
<heading> 111
<section> 112
Key 1111
note 1112
speech 1113
</heading>
<p> 1121
<s> 11211
<s> 11212
It's 112111
a 112112
great 112113
</s>
I've 112121
been 112122
looking 112123
</s>
501
502

FIG. 7

107

...		
It's	588	9209
a	9209	9239
great	9239	10196
honor	10196	11154
...		
Chancellor	22987	24135
Kohl.	24135	24703
I've	24703	25162
been	25162	25621
booking	25621	26419
...		
technology	38652	39260
industry.	39260	39839
...		

704

701 702 703

FIG. 8

109

...		
It's	588	9209
a	9209	9239
great	9239	10196
honor	10196	11154
...		
Chancellor	22987	24135
Kohl.	24135	24703
I've	24703	25162
been	25162	25621
looking	25621	26419
...		
technology	38652	39260
industry.	39260	39839
...		

400 702 703

FIG. 9

900

```
<!DOCTYPE linkweb SYSTEM "linkweb.dtd" [
  <!ENTITY sgmllink SYSTEM "lou.sgm" CDATA SGML>
]>
<linkweb>
<audio linkends="sgml54 audio54">
<urlloc id="audio54">file=d:\lou\lou_beta.mpg start=588 end=24703 unit=ms</urlloc>
<treeloc id="sgm154" locsrc=sgmllink>1 1 2 1 1</treeloc>
<audio linkends="sgml55 audio55">
<urlloc id="audio55">file=d:\lou\lou_beta.mpg start=24703 end=39839 unit=ms</urlloc>
<treeloc id="sgm155" locsrc=sgmllink>1 1 2 1 2</treeloc>
...
```

111

FIG. 10

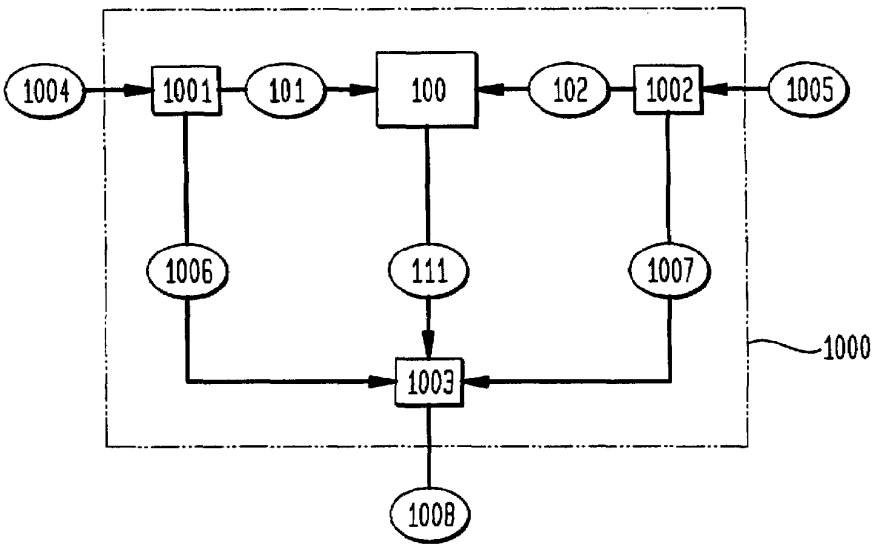
1004
1001
101
100
102
1002
1005
1006
111
1007
1000
1003
1008

FIG. 11

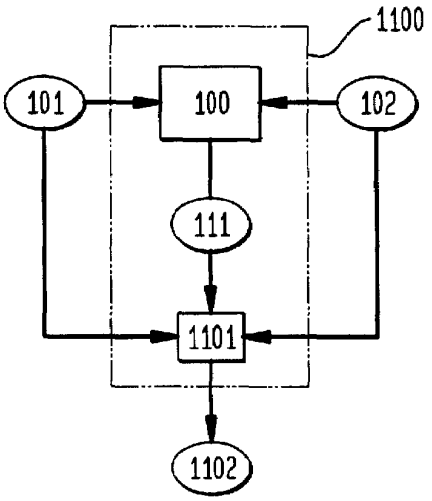
1100
101
100
102
111
1101
1102

FIG. 12

1200

LOCATOR	TEXT
1 1 2 1 1	It's a great honor for me to share this stage with the Lord Mayor and Chief Executive of Hannover, Mr. Jung; and in a few minutes, Chancellor Kohl.
1 1 2 1 2	I've been looking forward to this evening for a long time, because I've known for many years how important CeBIT is to the global information technology industry.

FIG. 13

1300

1301

LOCATOR	SGML ID
11211	SGML54
11212	SGML55
. . .	. . .

FIG. 14

1400

1301 1401

SGML ID	AUDIO ID
SGML54	AUDIO54
SGML55	AUDIO55
. . .	. . .

FIG. 15

1500

AUDIO ID	Audio Locator
AUDIO54	file=lou_beta.mpg start=588 end=24703 unit=ms
AUDIO55	file=lou_beta.mpg start=24703 end=39839 unit=ms
. . .	. . .

METHOD AND APPARATUS FOR LINKING REPRESENTATION AND REALIZATION DATA

FIELD OF THE INVENTION

The present invention is directed to the field of multimedia data handling. It is more particularly directed to linking multimedia representation and realization data.

BACKGROUND OF THE INVENTION

In recent years a new way of presenting information has been established. In this new multimedia approach, information is presented by combining several media, e.g. written text, audio and video. However, when using e.g. the audio data, finding and addressing specific structures (pages, chapters, etc. corresponding to the equivalent textual representation of the audio data) are either time consuming, complex, or impossible. A solution to overcome these problems is to link text and audio. The concept of linking text and audio is already used by some information providers. However, it is not widely used. One of the reasons for this is that it is a resource consuming process to build the hyper-links between the audio data and the corresponding textual representation. This either means a huge investment on the producers side, or a limited number of links, which limits the value for the user. As a result of the limiting state of the art user queries directed to databases containing multimedia material have to be in most cases quite general. For example a user asks "In which document do the words "Italian" and "inflation" occur?" A response to this query results in the complete audio document to be returned in which the requested data is enclosed.

SUMMARY OF THE INVENTION

Accordingly, it is an aspect of the present invention to provide an enhanced method and apparatus to link text and audio data. It recognizes that most acoustic multimedia data have a common property which distinguishes them from visual data. These data can be expressed in two equivalent forms: as a textual or symbolic representation, e.g. score, script or book, and as realizations, e.g. an audio stream. As used in an example of the present invention an audio stream is either an audio recording or the audio track of a video recording or similar data.

Information typically is presented as textual representation. The representation contains both the description of the content of the realization and the description of the structure of the realization. This information is used in the present invention to provide a method and apparatus for linking the representation and the realization.

Starting from a textual or symbolic representation, (e.g. a structured electronic text document,) and one or multiple realizations (e.g. digital audio files like audio recording which represent the corresponding recorded spoken words,) so called hyper links between the representation, (e.g. the text,) and the related realization, (e.g. the audio part,) are created. An embodiment is provided such that the realization is structured by combining a time-stamped (or otherwise marked) version of the representation generated from the realization with structural information from the representation. Errors within the time stamped representation are eliminated by aligning the time-stamped version of the representation generated from the realization with the content of the original representation in beforehand.

The hyper links are created by an apparatus according to the present invention. In one embodiment it is stored in a hyper document. These hyper links are used for performing search operations in audio data equivalent to those which are possible in representation data. This enables an improved access to the realization (e.g. via audio databases). Furthermore it is not only possible to search for elements of the input data, (e.g. words,) within the resulting hyper links or hyper document. But, it is also possible to navigate within the resulting data, (e.g. the hyper document,) and define the scope of the playback. In this context the word 'navigation' means things like 'go to next paragraph', 'show complete section that includes this paragraph', etc. In an embodiment, the scope of the playback is defined by clicking a display of a sentence, a paragraph, a chapter, etc. in a hyper link document.

Thereby the segments of the realization, (e.g. the audio stream,) become immediately accessible. In accordance with the present invention, these capabilities are not created through a manual process. All or part of this information is extracted and put together automatically.

The time-alignment process of the present invention connects the realization domain with the representation domain and therefore allows that certain operations, which are generally difficult to perform in the realization domain, be shifted into the representation domain where the corresponding operation is relatively easy to perform. For example, in recorded speech, standard text-mining technologies can be used to locate sequences of interest. The structure information can be used to segment the audio signal in meaningful units like sentence, paragraph or chapter.

An aspect of the present invention enables the automatic creation of link and navigation information between text and related audio or video. This gives producers of multimedia applications a huge process improvement. On one hand, an advantage is that the software creates hyper links to the audio on a word by word, or sentence-by-sentence basis depending upon which is the more appropriate granularity for the application. Other embodiments use another basis that is appropriate for the problem to be solved. Therefore a major disadvantage of previous techniques, namely the limited number of links, is eliminated. On the other hand the technique of the present invention it dramatically reduces the amount of manual work necessary to synchronize a text transcript with its spoken audio representation, even if the result creates a higher value for the user. It also eliminates another disadvantage of the previous techniques, namely the high costs of building such linked multimedia documents.

Another aspect of the present invention is to generate a high level of detail, such that applications can be enhanced with new functions, or even new applications may be developed. Single or multiple words within a text can be aligned with the audio. Thus single or multiple words within a speech can be played, or one word in a sentence in a language learning application, or any sentence in a lesson, document, speech, etc. can be played.

BRIEF DESCRIPTION OF THE DRAWINGS

These and other aspects, features, and advantages of the present invention will become apparent upon further consideration of the following detailed description of the invention when read in conjunction with the drawing figures, in which:

FIG. **1** shows an example of a schematic block diagram of the aligner in accordance with the present invention;

FIG. **2** shows an example of a textual representation of a book in SGML;

FIG. **3** shows an example of a flow chart diagram describing a method of combining representation and realization in accordance with the present invention;

FIG. **4** shows an example of a plain representation as created by a structural analyzer;

FIG. **5** shows an example of a tree structure of a representation with locators;

FIG. **6** shows an example of structural information as created by the structural analyzer;

FIG. **7** shows an example of a time-stamped representation as created by the temporal analyzer;

FIG. **8** shows an example of a time-stamped aligned representation as created by the time aligner;

FIG. **9** shows an example of a hyper-link document with hyper links as created by the link generator;

FIG. **10** shows an example of a aligner for other file formats in accordance with the present invention;

FIG. **11** shows an example of an aligner with enhancer in accordance with the present invention;

FIG. **12** shows an example of a first mapping table as used in an audio database in accordance with the present invention;

FIG. **13** shows an example of a second mapping table as used in an audio database in accordance with the present invention;

FIG. **14** shows an example of a third mapping table as used in an audio database in accordance with the present invention;

FIG. **15** shows an example of a fourth mapping table as used in an audio database in accordance with the present invention.

DETAILED DESCRIPTION OF THE INVENTION

FIG. **1** shows an example embodiment of an aligner **100** according to the present invention. The aligner **100** comprises a structural analyzer **103** with input means. The structural analyzer **103** is connected via two output means to a time aligner **108** and a link generator **110**. The aligner **100** further comprises a temporal analyzer **106** with input means. The temporal analyzer **106** is connected via output means to the time aligner **108**. The time aligner **108** with two input means for receiving data from the structural analyzer **103** as well as from the temporal analyzer **106** is connected via output means to the link generator **110**. The link generator **110** with two input means for receiving data from the structural analyzer **103** as well as from the time aligner **108** has an output means for sending data.

As shown in FIG. **1**, the structuring process starts from a representation **101** and a realization **102**. Usually both the representation **101** and the realization **102** are each stored in a separate file, but each of the data sets may actually be distributed among several files or be merged in one complex hyper-media file. In an alternate embodiment, both the representation **101** and the realization **102** may be fed into the system as a data stream.

The representation **101** is a descriptive mark-up document, e.g. the textual representation of a book, or the score of a symphony. An example of a textual representation of a book marked up in Standard Generalized Markup Language (SGML) as defined in ISO 8879 is shown in FIG. **2**. Thereby the SGML document comprises parts defining the structural elements of the book (characterized by the tag signs < . . . >) and the plain content of the book. Instead of SGML other markup languages, e.g. Extensible Markup Language (XML) or LaTeX may be similarly used.

An example of a realization **102** is an audio stream in a arbitrary standard format, e.g. WAVE or MPEG. It may be for example a RIFF-WAVE file with the following characteristics: 22050/11025 Hz, 16 bit mono. In the example the realization **102** can be a narrated book in the form of a digital audio book.

An example of a procedure for combining representation **101** and realization **102** according to the present invention is illustrated in FIG. **3**. In a first processing step **301**, the representation **101** is fed into the structural analyzer **103**. The structural analyzer **103** analyzes the representation **101** and separates the original plain representation **104** and a structural information **105**. The plain representation **104** includes the plain content of the representation **101**, that is the representation **101** stripped of all the mark-up. As an example the plain representation **104** (comprising the original words **400**) of the representation **101** is shown in FIG. **4**.

An example for a structural information **105** appropriate for audio-books is a text with locators. Therefore in the above embodiment the structural analyzer **103** builds a tree structure of the SGML tagged text **101** of the audio book and creates locators which determine the coordinates of the elements (e.g. words) within the structure of the representation **101**. Those skilled in the art will not fail to appreciate that the imposed structure is not restricted to a hierarchical tree like a table of contents, but other structures, e.g. lattice or index may be used as well.

The process of document analysis and creation of structural information **105** as carried out in step **301** is now described. In FIG. **5** a tree structure with corresponding locators **501**, **502**, . . . , as built during this process is illustrated for the SGML formatted example depicted in FIG. **2**.

After the representation **101** is obtained, the SGML file is fed into the structural analyzer **103**, the structural analyzer **103** searches start elements (with the SGML tag structure < . . . >) and stop elements (with the SGML tag structure </ . . . >) of the representation **101**. If the event is a start element a new locator is created. In the present embodiment, for the event <book> the locator "**1**", for the event <chapter> the locator "**11**" etc. is created. If the event is a data element, like <heading> or <s> (sentence), the content (words) together with the current locators are used to build the structural information **105** and the plain text is used to build the plain representation **104**. In case the event is an end element, the structural analyzer **103** leaves the current locator and the procedure continues to examine the further events. If no further event exists the procedure ends.

An example embodiment of structural information **105** output by the structural analyzer **103** is shown in FIG. **6**. The structural information **105** contains the elements of the realization **101** (corresponding to the plain representation **104**), e.g. the words, in the first column, and the corresponding locators **501**, **502**, . . . in the second column.

In step **302** of FIG. **3**, which may be carried out before, after or at the same time as step **301**, the realization **102**, e.g. the audio stream, is fed into the temporal analyzer **106**. The temporal analyzer **106** generates a time-stamped (or otherwise marked) representation **107** from the realization **102**. It is advantageous to generate a time-stamped representation **107** of the complete realization **102**. However, some embodiments create marked or time-stamped representations **107** only of parts of the realization **102**.

The time-stamped representation **107** includes the transcript and time-stamps of all elementary representational units like e.g. word or word clusters. In the above example a speech recognition engine is used as temporal analyzer **106** to generate a raw time-tagged transcript **107** of the audio file **102**. Many commercially available speech recognition engines might be used, for example IBM's ViaVoice. However, in addition to the recognition of words, the temporal/

marker analyzer **106** should be able to allocate time stamps and/or marks for each word. An example for a such a time-stamped representation **107** is the transcript shown in FIG. **7**. The start times **702** and the end times **703** in milliseconds are assigned to each word **701** of the resulting representation. The start and end times locators **702**, **703** are time locators that specify an interval in the audio stream data using the coordinate system appropriate for the audio format, e.g. milliseconds for WAVE-files. The time-stamped representation **107** as shown in FIG. **7** may include words **704** which have not been recognized correctly, e.g. "Hohl" instead of "Kohl" or "booking" instead of "looking".

In FIG. **3**, step **303**, the plain representation **104** derived from step **301** and the time-stamped representation **107** derived from step **302** are fed to the time aligner **108**. The time aligner **108** aligns the plain representation **104** and the time-stamped representation **107**. Thereby for the aligned elements, the time locator (start time **702**, end time **703**) from the time-stamped representation **107** is attached to the content elements (e.g. words) from the plain representation **104** leading to the time-stamped aligned representation **109**. The time aligner **108** creates an optimal alignment of the words **701** from the time-stamped representation **107** and the words contained in the plain representation **104**. This can be done by a variety of dynamic programming techniques. Such an alignment automatically corrects isolated errors **704** made by the temporal analyzer **106** by aligning the misrecognized words **704** with the correct counterparts, e.g. "Hohl" with "Kohl", "booking" with "looking". Missing parts of representation **101** and/or missing realization **102** result in that segments of the plain representation **104** and/or the time-stamped representation **107** remain unaligned. An example of an aligned representation **109** combining the correct words **400** and the time locators **702**, **703** is shown in FIG. **8**.

In step **304** of FIG. **3**, the structural information **105** and the time-stamped aligned representation **109**, e.g. in form of data streams, are fed into a link generator **110**. The link generator **110** then combines the locators **501**, **502**, . . . of each element from the structural information **105** with the respective time locator **702**, **703** from the time-stamped aligned representation **109**, thereby creating connections between equivalent elements of representation **101** and realization **102**, so called time-alignment hyper links **111**. In an embodiment these hyper links **111** are stored in a hyperlink document. In an alternative embodiment these hyperlinks are transferred to a data base.

It is advantageous that the hyper-link document be a HyTime document conforming to the ISO/IEC 10744: 1992 standard, or a type of document using another convention to express hyperlinks, e.g. DAISY, XLink, SMIL, etc.

Whereas in the above example the locators of each word are combined, it is however possible to combine the locators of sentences or paragraphs or pages with the corresponding time locators. An example for a hyper-link document **900** in HyTime format is shown in FIG. **9**. Therein for each sentence the locators **501**, **502**, . . . , for the representation **101** and the time locator **702**, **703**, . . . , for the realization **102** are combined in hyper links. An alternate embodiment creates hyper links **111** wherein the locators for each word or for each other element (paragraph, page, etc.) are combined.

It will be understood and appreciated by those skilled in the art that the inventive concepts described by the present application may be embodied in a variety of system contexts. Some of the typical application domains are described in the following.

Sometimes either the representation or the realization (or both) is not available in a native or operating data format directly processable by the aligner **100**. In this case the available data has to be converted from a native format into the data format which can be used by the aligner **100** directly.

Thus, in some cases, the native alien format of the original representation is not the same format as the native alien format of the realization. The representation is given in a native data format (A). The realization is given in a native data format (B). These data formats are different. In an embodiment, the representation (A) is converted into an operating data format (A') and the realization (B) is converted into an operating data format (B').

FIG. **10** illustrates an example of an aligner **1000** for other file formats in accordance with the present invention. Using the aligner **1000** it becomes possible to create hyper links or hyper-link documents defined in the native format of the representation and/or realization. For example for the representation a large variety of such native representational formats exist. These range from proprietary text formats like e.g., Microsoft Word or Lotus WordPro, to text structuring languages like e.g. Troff or TeX.

This aligner **1000** includes aligner **100** shown in FIG. **1**. Additionally a first converter **1001**, and/or a second converter **1002**, and a link transformer **1003** are elements of the aligner **1000**. These elements are connected to each other as shown in FIG. **10**.

In an embodiment the following procedure is applied. First the native representation **1004** is converted by the first converter **1001** into a representation **101** in an operating or standard format, e.g. SGML. Additionally the first converter **1001** produces information necessary to re-convert the resulting hyper links **111** into the native format. Such information can be e.g. a representation mapping table **1006** (a markup mapping table).

The native realization **1005** is converted by a second converter **1002** into a realization **102** in the operating or standard format, e.g. WAVE. In addition a realization mapping table **1007** (a time mapping table) is created by the second converter **1002**.

In the described example it is assumed, that both the representation and the realization have to be converted before being processed by the aligner **100**. A situation is however possible, in which only the representation **101** or only or the realization **102** has to be converted. Accordingly the procedure has to be adapted to the particular situation.

Both converters **1001**, **1002** are programmed according to the source and destination formats. The detailed implementation of the converters **1001**, **1002** and the way of creating the mapping tables **1006**, **1007** are accomplished in ways known to those skilled in the art. Next both the representation and the realization, each in operating/standard format, are fed into the aligner **100**. Aligner **100** creates the hyper-links **111** as described above. Next, the hyper-links **111** or the corresponding hyper-link document **900** and the mapping tables **1006**, **1007** are used by the link transformer **1003** to create native hyper-links **1008** in the format of the original representation **1004**. For this purpose the link transformer **1003** uses the mapping tables **1006** and/or **1007** to replace the locators in the hyper links **111** with locators using the appropriate coordinate systems for the native representation **1004** and/or native realization **1005** as specified by the mapping tables **1006**, **1007**. For example if the native representation **1004** was written in HTML format, it would than be converted into SGML format by the first converter **1001**. The hyper links **111** created by the aligner **100** would than be retransformed into HTML by the link transformer **1003** using the mapping table **1006**.

Sometimes either the representation **101** and/or the realization **102** is enhanced by using information from the other. Examples include automatic subtitling, time-stamping the dialogues in a script, etc.

FIG. **11** illustrates an example of an aligner **1100** with an enhancer corresponding to the present invention. The enhancer **1101** is employed to create enhanced versions of representation **101** and/or realization **102**. The enhancer **1101** uses the hyper links **111** or the hyper-link document **900** from the aligner **100** and the original representation **101** and/or the original realization **102** to create an enhanced representation and/or an enhanced realization **1102** or both. Thereby the enhancer **1101** includes the hyper links **111** into the original representation **101** or realization **102**. A typical example for an enhanced representation **1102** is the addition of audio clips to an HTML file. Other examples are the addition of a synchronized representation to MIDI or RIFF files. It is noted that the aligner **1100** with enhancer can of course be combined with the principle of the aligner **1000** for other file formats as described above.

Telecast applications (TV, digital audio broadcasting etc.) use an interleaved system stream that carries the representation **101**, the realization **102** and a synchronization information. The synchronized information is created in the form of a system stream by an aligner with a multiplexer in accordance with the present invention. Again FIG. **11** may be used to illustrate the system. This aligner with multiplexer may be implemented to use the aligner **100** as described above. A multiplexer (corresponding to the enhancer **1101** in FIG. **11**) is employed to generates an interleaved system stream (corresponding to the enhanced representation **1102** in FIG. **11**). In this way, the multiplexer combines the original representation **101**, the original realization **102** and the hyper links **111** into one combined system stream. It is noted that the concept of the aligner with multiplexer can be combined with the principles of using other file formats and with the principles of creating an enhanced representation and/or realization as described above.

An example embodiment, applying the present invention to an audio database system is now described. Realization **102**, representation **101**, and hyper links **111** according to the present invention can be used to create an audio database that allows a user to access only the relevant segments of recorded speech data. For this purpose, the representation **101**, the realization **102**, and hyper links **111** are transferred into a database to use typical database access methods to search and navigate through the information. Any database may be used, e.g. relational databases etc. The import module of such a database reads the hyper links **111**, (which are for example included in a hyper link document **900**,) the representation **101**, and the realization **102**. The module generally stores these information in an internal table representation.

It is advantageous to use such a database to implement applications which enable an user to exploit the hyper links **111**. Accordingly, an example embodiment employs the concept of a structured audio database using a query by audio content engine. From the viewpoint of the user the database is an audio database. The user queries the database in order to get audio data according to his query. For example the user may query such a database by entering keywords or phrases into a graphical user interface (GUI) query mask. If a voice-type interface is used, the user queries the database using audio queries. These audio queries are then converted into text queries, e.g. by means of voice recognition.

In cases wherein the user would ordinarily get a complete document in which the requested audio data is enclosed as the result of his query, using the data base concept of the present invention the user indicates the structural unit of the results expected (e.g. word, sentence, paragraph, any etc.) before the query is sent to the database. This is done for example by selecting a corresponding button or an item from a drop-down list in a GUI. In an alternate embodiment using a speech user interface (SUI), the user speaks his query to the computer using either a controlled or a free vocabulary. An example would be: "Find me all paragraphs where "Italian" and "inflation" occur in the same sentence."

In the following example embodiment the requested structural unit is "sentence". After the text query is directed to the audio database, the internal table representation is used to search for certain words and phrases and locate the respective piece of audio.

FIG. **12** shows an embodiment of an example of a first mapping table **1200** with locators **501**, **502** and text. The query is applied to this first mapping table **1200** and a text search is performed. In the embodiment the search method uses a simple substring query or a more advanced techniques as for example linguistic text mining. In the example the search data is contained in the second column of mapping table **1200**. Assuming the search word is contained in the sentence in the second row. According to mapping table **1200** the locator related to this sentence is "11212". Than, using this locator, the corresponding locator identifier (ID) ID **1301** (here "SGML55") is determined using a second mapping table **1300** as shown in FIG. **13**. Next, using this locator ID **1301**, the corresponding time locator ID (audio ID) **1401** (here "AUDIO55") is determined using a third mapping table **1400** as shown in FIG. **14**. Finally, using the time locator ID **1401**, the corresponding time locator (which is the audio locator in milliseconds) for this sentence is determined using a fourth mapping table **1500**. The audio information (filename, start time **702**, end time **703**) resulting from the query is found and retrieved from mapping table **1500**. The corresponding audio data is output to the user subsequently.

If the requested piece was not a sentence, but for example the paragraph containing this sentence, then additional information from the internal table representation, e.g. from a table representing the structure of the corresponding document tree, is used to determine the locator of the first and the last sentence of the requested paragraph. The above steps are performed for each locator and the resulting audio locators are combined into a new one.

Depending on the type of structural unit selected, in a GUI the search results are presented to the user as a resulting document comprising a list or a tree of hits. For example the tree starts with a list of all the documents in the database that contain at least one hit. At each structural level this list can be navigated by expanding the nodes until the smallest structural unit that contains a hit is reached. At each stage the segment of the audio data containing the hit can be played by clicking on the corresponding node of the result tree.

In the case of a SUI, the search results are summarized and read to the user by a speech synthesizer. As for example:

> "In the database are four audio documents that contain the phrase you have searched. These are grouped in decreasing order of hit frequency: document number two with three hundred hits, document three with one hundred hits, document number one with twenty hits, and document number four with two hits."

As in querying the database, the user can respond with speech input and ask the system to either expand a node for further details or to play a node.

Since, not only the content but also the structural information of the input data are used in the present invention it is possible to search not only though the content, but through the

structure of the input data. This means that it is possible to search for a question and a corresponding answer in an interview or vice versa.

Because of the presence of hyper links and/or hyper link documents in the audio data base as described above, it is advantageous that the database be implemented as a web enabled database. Accordingly in an embodiment, the user interface is a web browser, e.g. an HTML interface for search panels and displaying matching item lists. The presentation of the text and all search results is done as HTML or XML documents. The complex hyper link structure created is transferred to the simple hyperlink structure, e.g. HTML, of common web browser. Any sentence in the resulting document is hyper-linked with the related audio section. The parts that match the search criteria are highlighted. Navigation through the text (next sentence, previous paragraph, etc.) is done by clicking small icons attached to the document structure. Starting playback of the related audio section is done by clicking an icon or the text itself.

Potential applications for this technology include hybrid electronic text/audio books e.g. on CD-ROM, etc. where the production process can be enhanced at the same time by providing more functions for the end user. In Internet and Intranet magazines, original interviews and speeches can be added to the text. In broadcast archives, specific passages from a set of longer speeches can be extracted more effectively. The search and access of specific words or phrases in all kind of audio archives is supported. This simplifies access for the public and/or scientists. In court recording easy access to any statement is possible. This is not only in writing, but also in direct access to the spoken words. In general, the present invention provides a platform for multimedia applications, e.g. language learning applications. The invention makes it possible: to combine the written text and spoken text (audio) in a way that allows to easily switch between them; take the text to extract the information; search through it; and if there is an interesting part, just click on it and listen to the related spoken words (or even view the scene on video). Furthermore the present invention supports a variety of different languages (e.g. English, German, Italian, Spanish, Japanese, Chinese, Arabic, etc.).

The present invention can be realized in hardware, software, or a combination of hardware and software. The present invention can be realized in a centralized fashion in one computer system, or in a distributed fashion where different elements are spread across several interconnected computer systems. Any kind of computer system—or other apparatus adapted for carrying out the methods described herein—is suited. A typical combination of hardware and software could be a general purpose computer system with a computer program that, when being loaded and executed, controls the computer system such that it carries out the methods described herein. The present invention can also be embedded in a computer program product, which comprises all the features enabling the implementation of the methods described herein, and which—when loaded in a computer system—is able to carry out these methods. Computer program means or computer program in the present context mean any expression, in any language, code or notation, of a set of instructions intended to cause a system having an information processing capability to perform a particular function either directly or after either or both of the following a) conversion to another language, code or notation; b) reproduction in a different material form.

It is noted that the foregoing has outlined some of the more pertinent objects and embodiments of the present invention. The concepts of this invention may be used for many applications. Thus, although the description is made for particular arrangements and methods, the intent and concept of the invention is suitable and applicable to other arrangements and applications. It will be clear to those skilled in the art that other modifications to the disclosed embodiments can be effected without departing from the spirit and scope of the invention. The described embodiments ought to be construed to be merely illustrative of some of the more prominent features and applications of the invention. Other beneficial results can be realized by applying the disclosed invention in a different manner or modifying the invention in ways known to those familiar with the art. Thus, it should be understood that the embodiments has been provided as an example and not as a limitation. The scope of the invention is defined by the appended claims.

We claim:

1. A method for automatically linking in a computer system an original representation contained in a single file including text and a realization of the original representation in non-text form, comprising the steps of:

separating in a computer system a plain representation and structural information pertaining to structure of the contents of said text from said single file of the original representation;

generating a time-stamped first representation by processing the realization without input from said original representation;

creating a time-stamped aligned representation by aligning the plain representation and the time-stamped first representation;

creating hyper links between elements of the original representation and realization by combining the aligned representation and the structural information, and combining time locators from the time-stamp first representation and structural locators from the structure information,

converting the original representation from any native data format to an operating data format for representations; and

converting the realization from any native data format to an operating data format for realizations.

2. A method as recited in claim **1**, wherein said step of separating comprises including the content of the original representation into the plain representation, and including structural locators which determine coordinates of elements within a structure of the original representation into the structural information.

3. A method as recited in claim **1**, wherein in step of generating comprises including time locators into the time-stamped first representation, whereby the time locators specify an interval in the realization using an appropriate coordinate system.

4. A method as recited in claim **1**, wherein the step of generating is carried out at the same time as the step of separating.

5. A method as recited in claim **1**, wherein the step of creating a time-stamped aligned representation includes aligning the content of the original representation with time locators from the time-stamped first representation.

6. A method as recited in claim **1**, wherein in the step of creating hyperlinks, the hyper links are created between words and/or sentences and/or paragraphs and/or pages of the original representation and the realization.

7. A method as recited in claim **1**, further comprising storing the hyper links in a hyper document.

8. A method as recited in claim **1**, further comprising transferring the hyper links into a database.

9. A method as recited in claim **1**, further comprising transferring the original representation, the realization and the hyper links into a database.

10. A method as recited in claim **1**, fierier comprising feeding the original representation and/or the realization into a structural analyzer and/or a temporal analyzer as a data stream.

11. A method as recited in claim **1**, wherein the step of converting includes:

generating information necessary to reconvert resulting hyper links into the native format, and

transferring the resulting hyper links into hyper links in the native data format of the original representation and/or the realization by using re-converting information obtained in the step of generating information.

12. A method as recited in claim **11**, wherein the step of generating information creates the re-converting information in the form of a representation mapping table and/or a realization mapping table.

13. A method as recited in claim **1**, further comprising creating enhanced versions of the original representation and/or the realization from the hyper links.

14. A method as recited in claim **1**, further comprising creating a combined system stream by combining the hyper links with the original representation and the realization.

* * * * *