UNITED STATES PATENT AND TRADEMARK OFFICE

BEFORE THE PATENT TRIAL AND APPEAL BOARD

LIBERTY ENERGY INC. AND LIBERTY ENERGY SERVICES LLC
Petitioners

v.

U.S. WELL SERVICES HOLDINGS, LLC
Patent Owner

Case No. IPR2025-00778
Patent 11,959,533

PETITION FOR *INTER PARTES* REVIEW OF CLAIMS 1-25 OF
U.S. PATENT NO. 11,959,533

TABLE OF CONTENTS

I. MANDATORY NOTICES 1
II. STANDING AND FEES 2
III. OVERVIEW OF THE '533 PATENT 3
A. Subject Matter of the '533 Patent 3
B. Priority Date and Prosecution History of the '533 Patent 5
IV. SUMMARY OF PRIOR ART 6
A. Buckley (EX1004) 6
B. Bergan (EX1006) 8
C. Rosman (EX1007) 8
D. Payne (EX1008) 9
E. Yi (EX1009) 9
F. Jelaska (EX1012) 10
G. Tutterow (EX1013) 10
H. August (EX1014) 10
I. Morris (EX1015) 10
J. Joyner (EX1016) 11
K. Karassik (EX1017) 11
L. Summary of Grounds 11
V. LEVEL OF ORDINARY SKILL 13
VI. CLAIM CONSTRUCTION 13
VII. INSTITUTION IS PROPER 13
A. The Fintiv Factors Favor Institution under §314(a) 13
B. Institution is Proper under §325(d) 15
VIII. THE CHALLENGED CLAIMS ARE UNPATENTABLE 15
A. Ground 1A: The Combination of Buckley, Bergan, August, Joyner, and Morris Renders Obvious Claims 1-4 and 10-13 15
1. Motivation to Combine 15
2. Claim 1 25
3. Claim 2 44

4. Claim 3 45
5. Claim 4 46
6. Claim 10 46
7. Claim 11 47
8. Claim 12 47
9. Claim 13 47

B. Ground 1B: The Combination of Yi, Bergan, August, Joyner, and Morris Renders Obvious Claims 1, 3, 4, 10, 12, 13 48

1. Motivation to Combine 48
2. Claim 1 50
3. Claim 3 55
4. Claim 4 55
5. Claim 10 56
6. Claim 12 56
7. Claim 13 56

C. Ground 2A: The Combination of Buckley, Bergan, August, Joyner, Morris, and Karassik Renders Obvious Claims 5, 6, 14, and 15 57

1. Motivation to Combine 57
2. Claim 5 58
3. Claim 6 58
4. Claim 14 59
5. Claim 15 59

D. Ground 2B: The Combination of Yi, Bergan, August, Joyner, Morris, and Karassik Renders Obvious Claims 5, 6, 14, and 15 59

1. Motivation to Combine 59
2. Claim 5 60
3. Claim 6 60
4. Claim 14 60
5. Claim 15 60

E. Ground 3A: The Combination of Buckley, Bergan, August, Joyner, Morris, and Payne Renders Obvious Claims 7 and 16 61

1. Motivation to Combine 61
2. Claim 7 62
3. Claim 16 63

F. Ground 3B: The Combination of Yi, Bergan, August, Joyner, Morris, and Payne Renders Obvious Claims 2, 7, 11 and 16 63
1. Motivation to Combine 63
2. Claim 2 66
3. Claim 7 67
4. Claim 11 68
5. Claim 16 68

G. Ground 4A: The Combination of Buckley, Bergan, August, Joyner, Morris, and Rosman Renders Obvious Claims 8, 9, 17, 18, and 22 ... 68
1. Motivation to Combine 68
2. Claim 8 72
3. Claim 9 75
4. Claim 17 79
5. Claim 18 80
6. Claim 22 80

H. Ground 4B: The Combination of Yi, Bergan, August, Joyner, Morris, and Rosman Renders Obvious Claims 8, 9, 17, 18, and 22 81
1. Motivation to Combine 81
2. Claim 8 82
3. Claim 9 82
4. Claim 17 82
5. Claim 18 82

I. Ground 5A: The Combination of Buckley, Bergan, August, Joyner, and Morris Renders Obvious Claim 19 in view of the Knowledge of a POSITA and, in the alternative, Jelaska 83
1. Motivation to Combine 83
2. Claim 19 84

J. Ground 5B: The Combination of Yi, Bergan, August, Joyner, and Morris Renders Obvious Claim 19 in view of the Knowledge of a POSITA and, in the alternative, Jelaska....86

1. Motivation to Combine....86

2. Claim 19....87

K. Ground 6A: The Combination of Buckley, Bergan, August, Joyner, and Morris Renders Obvious Claims 20 and 21 in view of the Knowledge of a POSITA and, in the alternative, in view of Jelaska and Tutterow....87

1. Motivation to Combine....87

2. Claim 20....88

3. Claim 21....90

L. Ground 6B: The Combination of Yi, Bergan, August, Joyner, and Morris Renders Obvious Claims 20 and 21 in view of the Knowledge of a POSITA and, in the alternative, in view of Jelaska and Tutterow....91

1. Motivation to Combine....91

2. Claim 20....92

3. Claim 21....92

M. Ground 7A: The Combination of Buckley, Bergan, August, Joyner, Morris, Rosman, and Payne Renders Obvious Claim 23....92

1. Motivation to Combine....92

2. Claim 23....92

N. Ground 7B: The Combination of Yi, Bergan, August, Joyner, Morris, Rosman, and Payne Renders Obvious Claims 22 and 23....93

1. Motivation to Combine....93

2. Claim 22....93

3. Claim 23....94

O. Ground 8A: The Combination of Buckley, Bergan, August, Joyner, Morris, Rosman, Payne, and Karassik Renders Obvious Claims 24 and 25....94

1. Motivation to Combine....94

2. Claim 24....94

3. Claim 25 94

P. Ground 8B: The Combination of Yi, Bergan, August, Joyner, Morris, Rosman, Payne, and Karassik Renders Obvious Claims 24 and 25 ...95

1. Motivation to Combine 95

2. Claim 24 95

3. Claim 25 95

IX. OBJECTIVE INDICIA DO NOT SUPPORT PATENTABILITY 95

X. CONCLUSION 95

LIST OF EXHIBITS

Ex. No.[1]	Description
1001	U.S. Patent No. 11,959,533 to Oehring *et al.* entitled "Multi-plunger Pumps and Associated Drive Systems" (the "'533 Patent")
1002	File History for U.S. Patent No. 11,959,533
1003	Declaration of Dr. Robert Durham
1004	U.S. Patent Publication No. 2020/0256429 to Buckley, "Electric Drive Pump for Well Stimulation," ("*Buckley*") filed September 25, 2018 and published August 13, 2020.
1005	U.S. Provisional Application No. 62/562,943 to Buckley *et al.*, "Electric Drive Pump for Well Stimulation," ("*Buckley Provisional*") filed September 25, 2017.
1006	U.S. Patent Publication No. 2015/0361736 to Bergan *et al.*, "Heave Compensation Winches," ("*Bergan*"), filed June 13, 2014 and published December 17, 2015.
1007	United States Patent No. 4,100,822 to Rosman, "Drive System for a Moving Mechanism," ("*Rosman*") filed April 19, 1976 and granted July 18, 1978.
1008	U.S. Patent Publication No. 2016/0533267 to Payne et al., "Well Fracturing Systems with Electrical Motors and Methods of Use" ("*Payne*"), filed March 3, 2016 and published September 8, 2016.
1009	Chinese Publication No. CN103742382A to Yi, "Fracturing Pump Transmission System and Fracturing Truck," ("Yi"), filed December 30, 2013 and published April 23, 2014.
1010	Certified English Translation of *Yi* and Translator's Declaration
1011	Merriam-Webster Online Dictionary, "Pinion," captured by the Internet Archive on August 17, 2017, available at <https://web.archive.org/web/20170817030125/https://www.merriam-webster.com/dictionary/pinion>.

[1] Citations to patents are made by column and line cite; citations to patent publications are made by paragraph number; citations to Exhibit 1002 are made with reference to the Bates-stamped pagination; citations to other exhibits are made to the page number of the document itself.

1012	D. T. Jelaska, *Gears and Gear Drives*. John Wiley & Sons, 2012.
1013	V. Tutterow and A. T. McKane, "Variable Speed Pumping: A Guide to Successful Applications," Europump and Hydraulic Institute, 2004.
1014	August, R. *et al.*, "Dynamics of Planetary Gear Trains," NASA Contractor Report 3793, June 1984 ("*August*").
1015	U.S. Patent Publication No. 2016-03690609 to Morris *et al.*, "Mobile Fracturing Pump Transport for Hydraulic Fracturing of Subsurface Geological Formations," ("*Morris*"), filed August 31, 2016 and published December 22, 2016.
1016	United States Patent No. 6,907,667 to Joyner *et al*., "Method for Facilitating the Assembly of a Universal Joint," ("*Joyner*") filed October 14, 2002 and granted June 21, 2005.
1017	Karassik, Igor J., et al., "Pump Handbook," McGraw-Hill, 2008 ("*Karassik*").
1018	Plaintiffs' Amended Complaint, *U.S. Well Services, LLC et al. v. Liberty Energy, Inc. et al.*, No. 4:24-cv-00839 (S.D. Tex. June 3, 2024)
1019	Defendants' Motion to Stay Pending *Inter Partes* Review, *U.S. Well Services, LLC et al. v. Liberty Energy, Inc. et al.*, No. 4:24-cv-00839 (S.D. Tex. March 19, 2025)
1020	Email from Case Manager to Counsel regarding Claim Construction Hearing in *U.S. Well Services, LLC et al. v. Liberty Energy, Inc. et al.*, No. 4:24-cv-00839 (S.D. Tex. February 12, 2025)
1021	Patent Scheduling Order, *U.S. Well Services, LLC et al. v. Liberty Energy, Inc. et al.*, No. 4:24-cv-00839 (S.D. Tex. May 23, 2024)
1022	Declaration of Sylvia Hall-Ellis, Ph.D.
1023	Claim Listing for Claims of '533 Patent
1024	Morton, M., "Unlocking the Earth: A Short History of Hydraulic Fracturing," GEO ExPro, Vol. 10, No. 6, December 2013 (https://geoexpro.com/unlocking-the-earth-a-short-history-of-hydraulic-fracturing/) (last accessed September 16, 2024).
1025	Wells, B.A., Wells, K.L, "Shooters – A "Fracking" History," American Oil & Gas Historical Society, https://aoghs.org/technology/hydraulic-fracturing, last updated March 7, 2024.
1026	Montgomery, Carl T., Smith, Michael B., "Hydraulic Fracturing, a History of an Enduring Technology," Journal of Petroleum Technology 62 (12), December 2010.

1027	Bourgoyne, Adam T. Jr., et al., "Applied Drilling Engineering," Society of Petroleum Engineering Textbook Series, Volume 2, 1986.
1028	Vasilliou, Marius S., "Historical Dictionary of the Petroleum Industry," Second Edition, Rowman & Littlefield, 2018.
1029	U.S. Patent Publication No. 2013/0306322 to Sanborn et al., entitled "System and Process for Extracing Oil and Gas by Hydraulic Fracturing" (filed Dec. 7, 2012 and published Nov. 21, 2013).
1030	U.S. Patent Publication No. 2012/0255734 to Coli et al., entitled "Mobile, Modular, Electrically Powered System for Use in Fracturing Underground Formations" (filed April 6, 2012 and published Oct. 11, 2012).
1031	Gardner Denver GD-2500 Quintuplex Well Servicing Pump Operating and Service Manual, captured by the Internet Archive on Sept. 17, 2005, available at <https://web.archive.org/web/20120917102614/http:/www.quincieoilfield.com/pdf/3.0%20Gardner%20Denver/2500/GD2500Q%20Op%20&%20Service%20Manual.pdf>.
1032	Merriam-Webster Online Dictionary, "Quintuple," captured by the Internet Archive on February 2, 2017, available at <https://web.archive.org/web/20170202121725/https://www.merriam-webster.com/dictionary/quintuple>.
1033	Mark's Standard Handbook for Mechanical Engineers, Eleventh Edition, McGraw-Hill Companies, New York, 2007.
1034	Nesbitt, B., "Handbook of Pumps and Pumping: Pumping Manual International," Elsevier, 2006.
1035	Langewis, Jr., C. and Gleeson, C. W., "Practical Hydraulics of Positive Displacement Pumps for High-Pressure Waterflood Installations," Society of Petroleum Engineers, February 1971.
1036	Lewis, M. J. T., "Gearing in the ancient world," Pergamon Press Ltd. 1993.
1037	Mabie, H. H., Reinholz, C. F., "Mechanics and Dynamics of Machinery," (4th Ed., 1987), John Wiley & Sons.
1038	Pawar, P. V. and Kulkarni, P. R., "Design of two stage planetary gear train for high reduction ratio," *International Journal of Research in Engineering and Technology,* vol. 4, no. 6, pp. 150-157, June 2015.
1039	Camara, John A., "Electrical Engineering Reference Manual for the Electrical and Computer PE Exam," 6th ed. (Professional Publications, Inc. 2002), ISBN: 1-888577-56-8.

1040	Fink, Donald G., STANDARD HANDBOOK FOR ELECTRICAL ENGINEERS, 13th ed. (McGraw-Hill, New York: 1993), ISBN: 0-07-020984-7.
1041	U.S. Patent Publication No. 2011/0241590 to Horikoshi et al., entitled "Motor Driving Apparatus Having Fault Diagnostic Function" (filed Feb. 11, 2011 and published Oct. 6, 2011).
1042	Roethemeyer, Dale E., Yankaskas, David R., "Evolution of Motor and Variable Frequency Drive Technology," in *ACEEE Summer Study Proceedings on Energy Efficiency in Industry*, 1995, pp. 541-552.
1043	U.S. Patent No. 3,186,222 to Martin, "Well Signaling System," filed July 28, 1960 and issued June 1, 1965.
1044	U.S. Patent No. 3,075,136 to Jones, "Variable Pulse Width Parallel Inverters," filed August 31, 1961 and issued January 22, 1963.
1045	U.S. Patent No. 3,262,036 to Clarke et al, "Means for Smoothly Varying the Speed of a Star-Connected Polyphase Induction Motor," filed September 19, 1962 and issued July 19, 1966.
1046	Shepherd, William and Stanway, Jack, "Unbalanced Voltage Control of 3-Phase Loads by the Triggering of Silicon Controlled Rectifiers," *IEEE Transactions on Industry and General Applications,* no. 3, pp. 206-216, 1965.
1047	Hickok, H. N., "Adjustable Speed—A Tool for Saving Energy Losses in Pumps, Fans, Blowers, and Compressors," *IEEE Transactions on Industry Applications,* no. 1, pp. 124-136, 1985.
1048	DeWinter, Frank A. and Kedrosky, Brian J., "The Application of a 3500-hp Variable Frequency Drive for Pipeline Pump Control," in IEEE Transactions on Industry Applications, Vol. 25, No. 6, 1019-1024 1989.
1049	Perrin, M., Kohn, G., Mugford, S., Seggewiss, G., "Induction Motors, Reciprocating Compressors and Variable Frequency Drives," *Record of Conference Papers. IEEE Industry Applications Society 44th Annual Petroleum and Chemical Industry Conference*, 15-17 Sept. 1997 1997, pp. 1-9, doi: 10.1109/PCICON.1997.648162.
1050	Lockley, B., Wood, B., Paes, R., DeWinter, F., "IEEE Std 1566 – The Need for a Large Adjustable Speed Drive Standard," in *2006 Record of Conference Papers – IEEE Industry Applications Society 53rd Annual Petroleum and Chemical Industry Conference*, 11-15 Sept. 2006, pp. 1-10, doi: 10.1109/PCICON.2006.359687.
1051	Manz, L. B., "The motor designer's viewpoint of an adjustable speed drive specification," *IEEE Industry Applications Magazine,* vol. 1, no. 1, pp. 16-21, 1995.

1052	Baseer, M., "Electric Machines and Adjustable Speed Drives," in University of Bradford Electric and Telecommunications Research Seminar Series, 8th Workshop Proceedings, April 1, 2009, 131-134.
1053	U.S. Patent No. 9,410,410 to Broussard et al., entitled "System for Pumping Hydraulic Fracturing Fluid using Electric Pumps" (filed Nov. 16, 2012 and issued Aug. 9, 2016).
1054	Johns, Cort MacLean, "Industrial Revolutions: From Ctesibius to Mars," ABC Book Center, 2021.
1055	Federal Court Management Statistics (December 31, 2024), available at <https://www.uscourts.gov/sites/default/files/2025-02/fcms_na_distprofile1231.2024.pdf >
1056	*Guidance on USPTO's Recission of "Interim Procedure for Discretionary Denials in AIA Post-Grand Proceedings with Parallel District Court Litigation"* (March 24, 2025)

I. MANDATORY NOTICES

Real Party in Interest: Liberty Energy Inc., Liberty Energy Services LLC (collectively, "Liberty" or "Petitioners"), and Liberty Advanced Equipment Technologies LLC are the real parties in interest.

Related Matters: The '533 Patent is involved in a pending lawsuit between Petitioners and U.S. Well Services Holdings, LLC ("Patent Owner," or "PO") entitled *U.S. Well Services, LLC, et al v. Liberty Energy, Inc. et al*, 4:24-cv-00839-KPE (S.D. Tex.) ("Liberty Litigation"). The '533 Patent was first asserted in the Liberty Litigation in an Amended Complaint on June 6, 2024. EX1018 (Plaintiffs' Amended Complaint).

The Parent of the '533 Patent, U.S. Patent No. 10,598,258 (the "'258 Parent Patent", Exhibit 1011) is currently being challenged in IPR2025-00066, filed on November 1, 2024 (the "'258 Parent Patent IPR").

The '533 Patent was challenged in IPR2025-00105, filed on November 5, 2024, which Petitioners are moving to terminate given its premature filing under 35 U.S.C. 311(c).

Lead Counsel and Back-Up Counsel: Petitioners designates lead and back-up counsel as noted below. A Power of Attorney is filed concurrently herewith under 37 C.F.R. §42.10(b).

Lead Counsel	Backup Counsel
Chad C. Walters, Reg. No. 48,022	Joseph Andrew Grado, Reg. No. 80,316

Baker Botts L.L.P. 2001 Ross Ave., Suite 900 Dallas, TX 75201-2980 Phone: (214) 953-6511 chad.walters@bakerbotts.com	Baker Botts L.L.P. 2001 Ross Ave., Suite 900 Dallas, TX 75201-2980 Phone: (214) 953-6522 andrew.grado@bakerbotts.com Jacob McDonald, Reg. No. 74,336 Baker Botts L.L.P. 2001 Ross Ave., Suite 900 Dallas, TX 75201-2980 Phone: (214) 953-6652 jacob.mcdonald@bakerbotts.com

Service Information: Correspondence to lead and back-up counsel can be provided at the postal and electronic addresses above. Petitioners also consent to service by electronic mail at chad.walters@bakerbotts.com, andrew.grado@bakerbotts.com, and jacob.mcdonald@bakerbotts.com.

II. STANDING AND FEES

Standing: Petitioners certify under 37 C.F.R. §42.104(a) that the '533 Patent is eligible for *inter partes* review and that Petitioners are not barred or estopped from requesting *inter partes* review on the grounds set forth herein.

Fees: The Office is authorized to charge the fee set forth in 37 C.F.R. §42.15(a) to Deposit Account No. 02-0384 as well as any additional fees that might be due in connection with this Petition.

III. OVERVIEW OF THE ’533 PATENT

A. Subject Matter of the ’533 Patent

The ’533 Patent generally relates to “drive systems for reciprocating plunger-style pumps used in hydraulic fracturing operations, and more particularly to multi-plunger hydraulic fracturing pumps and associated drive systems.” EX1001, 1:22-25.

The system taught by the ’533 Patent includes a “multi-plunger hydraulic pump” that is powered by a “plurality of motors,” which may be electric motors or hydraulic motors. *Id*., 2:50-3:7. Figure 3 of the ’533 Patent depicts this configuration:

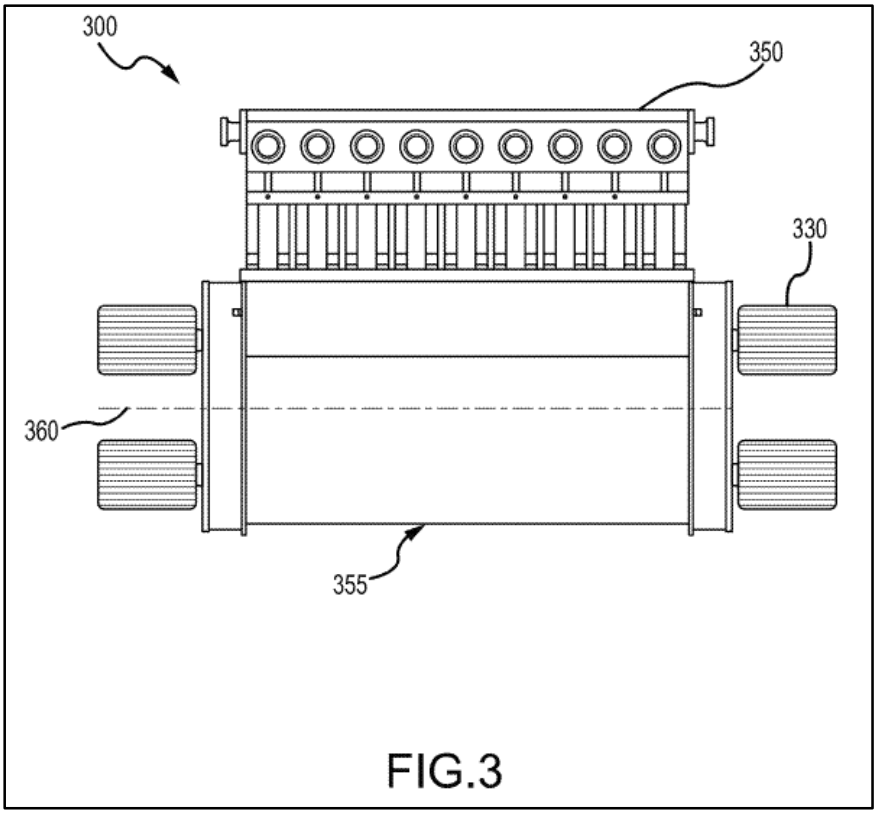

Id., Fig. 3 (showing pump 300, multi-plunger fluid end 350, motors 330, and crankshaft centerline 360, *id*., 8:41-64).

The system further includes a "planetary gear train having a plurality of input pinion gears in rotational contact with each of the plurality of motors." *Id*., 2:62-64. The planetary gear train comprises a "final drive gear 110" which "may have internal gear teeth positioned to catch the external gear teeth of the three planetary gears 120, which may cause rotation of the pump crankshaft 105." *Id*., 7:26-29. An example of this planetary gear train is depicted in Figure 1 below:

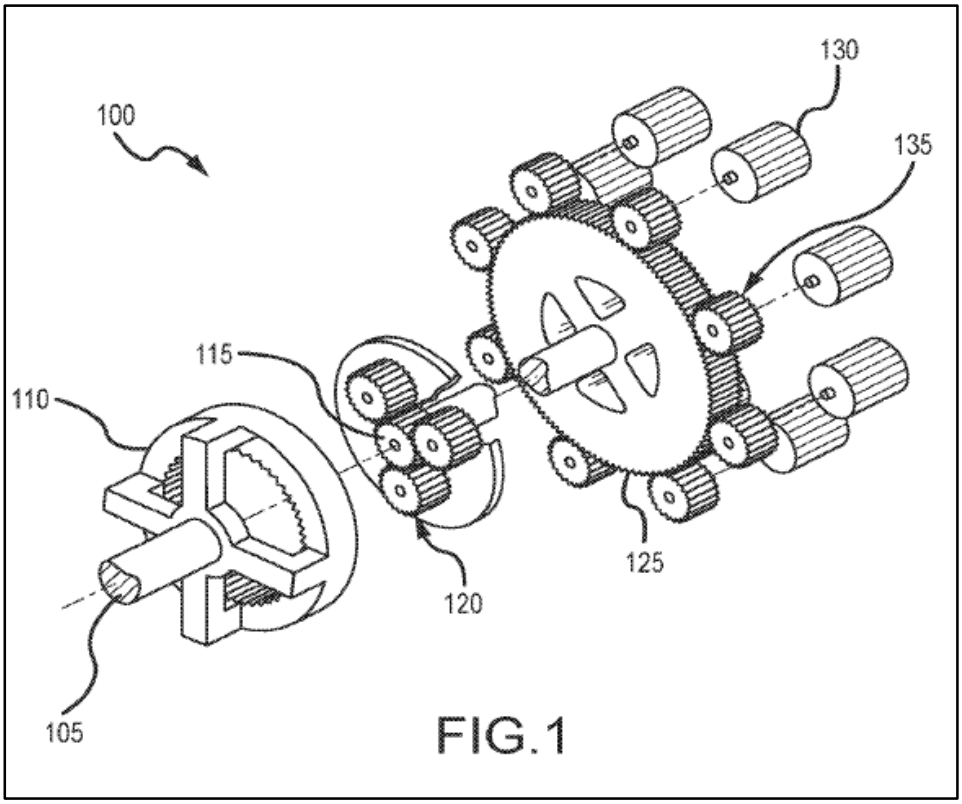

Id., Fig. 1.

Further, the electric motors may be connected to a "variable frequency drive (VFD)" that "control[s] the speed of the plurality of motors." *Id*., 3:22-24.

B. Priority Date and Prosecution History of the '533 Patent

The application leading to the '533 Patent was filed on July 24, 2023 as U.S. Application 18/357,271 and as a continuation of U.S. Patent App. 16/827,166, which was filed March 23, 2020 as a continuation of U.S. Patent App. 16/210,807, which was filed on December 5, 2018. Application 16/210,807 issued as U.S. Patent the '258 Parent Patent, which is the subject of the '258 Parent Patent IPR. EX1001, items (21), (22), (63). Application 18/357,271 claimed priority to provisional application No. 62/594,912, which was filed on December 5, 2017. EX1001, item (60). For purposes of this petition, Petitioner assumes without conceding that under AIA §102(a) the effective filing date of the '533 Patent is December 5, 2017.

The Patent Office issued a first Non-Final Office Action November 13, 2023, rejecting Claims 21-50 as being obvious over various combinations of U.S. Patent Publication 2020/0256429 ("*Buckley*"), U.S. Patent Publication 2015/0361736 ("*Bergan*"), U.S. Patent Publication 2017/0114625 ("*Norris*"), U.S. Patent No. 4,100,822 ("*Rosman*"), and U.S. Patent No. 8,851,850 ("*Mail*"). EX1002, 157-172. The Patent Office also issued a nonstatutory double patenting rejection of claims 21-27, 31-37, 40-42, 47, 49, and 50 based on claims 1-20 of the '258 Parent Patent. *Id*., 174.

In response, the Applicant amended the independent claims to include the subject matter of "allowable" dependent Claim 30: "…wherein a final drive gear is connected to the pump crankshaft by a plurality of arms extending from the final drive gear." *Id*., 140-147. Applicant further argued that the nonstatutory double patenting rejection was rendered moot by the amendments to the independent claims, because that rejection was not applied to the subject matter of Claim 30. *Id*., 145.

Following these amendments, the Patent Office issued a notice of allowance on December 26, 2023. *Id*., 101. Notably, the '533 Patent does not include any discussion of the "plurality of arms extending from the final drive gear," and Figure 1 contains the only depiction of final drive gear 110.

IV. SUMMARY OF PRIOR ART

A. Buckley (EX1004)

Buckley is a U.S. Patent Application Publication filed September 25, 2018, as PCT No. PCT/US2019/052755 and published August 13, 2020. EX1004. *Buckley* claims priority to U.S. Provisional Application No. 62/562,943 (EX1005, "*Buckley Provisional*") filed on September 25, 2017. *Buckley* properly claimed benefit to (EX1004, item (60)), was filed copending with (*id*., item (22)), and shared a common inventor with (*id*., item (72)) *Buckley Provisional*. *See* AIA 35 U.S.C. §102(d); MPEP §2154.01(b). Also, the subject matter relied upon in *Buckley* is disclosed in *Buckley Provisional*. *See* MPEP §2154.01(b).

Dynamic Drinkware does not apply. *See Dynamic Drinkware, LLC v. Nat'l Graphics, Inc.*, 800 F.3d 1375, 1379-80 (Fed. Cir. 2015). The Board has determined that, "for prior-art determinations under AIA §102, 'there is no need to evaluate whether any claim of [a reference] patent document is *actually entitled to priority* or benefit under 35 U.S.C. 119, 120.'" *See*, *e.g.*, *Penumbra, Inc. v. RapidPulse, Inc.*, IPR2021-01466, Paper 34 (P.T.A.B. March 20, 2023) (precedential), at 32 (emphasis original; citing MPEP §2154.01(b); holding that the requirement in *Dynamic Drinkware* (that under pre-AIA 35 U.S.C. §102(e), a reference patent's claims must have written description support in its provisional application in order to be entitled to the filing date of the provisional application) does not apply to AIA 35 U.S.C. §102(d)); *see also Apple Inc. v. Telefonaktiebolaget LM Ericsson*, IPR2022-00341, Paper 10 (P.T.A.B. Sept. 14, 2022), at 19.

Thus, for prior art purposes, *Buckley* was effectively filed on September 25, 2017, and qualifies as prior art under AIA §102(a)(2). Like the '533 Patent, *Buckley* describes a pumping system that "relates generally to hydraulic fracturing in oil and gas wells, and in particular to an electric drive pump used to drive a fluid end for the pumping of a fracturing fluid into a well." EX1004, [0001]; EX1005, 2. Thus, *Buckley* is from the same field of art as the '533 Patent and describes a fracturing pump that is similar to the pump described in the '533 Patent. EX1003, ¶122.

B. Bergan (EX1006)

Bergan is a U.S. Patent Publication filed on June 13, 2014, and published on December 17, 2015. *Bergan* is thus prior art to the '533 Patent at least under 35 U.S.C. §§102(a)(1) and 102(a)(2).

Bergan discloses a hoisting system for use in oil and gas drilling that includes a rotatable drum driven by multiple electric motors. EX1006, Abstract, [0003]-[0005], [0030]. *Bergan* further describes a "planetary gear system" that is used to couple the multiple electric motors to the load so the motors can drive the rotation of the load. *Id*., [0032], Figs. 5, 6.

Thus, *Bergan* is in a field of art—using multiple motors and a planetary gear system for driving a load in oil and gas drilling—that is highly relevant to the '533 Patent, which describes using multiple motors and a planetary gear system for driving a fracturing pump, and a person of ordinary skill in the art (POSITA) would understand that *Bergan* addresses the potential problem of coupling multiple electric motors to a load. EX1003, ¶¶127-128.

C. Rosman (EX1007)

Rosman is a U.S. Patent issued on July 18, 1978. *Rosman* is prior art at least under 35 U.S.C. §§102(a)(1) and 102(a)(2). *Rosman* teaches the use of multiple smaller motors which combine power outputs through gearing to drive a larger, higher torque load. *See, e.g.*, EX1007, 2:15-24, 4:54-62, Figs. 1-4. Thus, *Rosman*

is highly relevant to the ’533 Patent, as it describes a gearing configuration for using multiple electric motors to drive a load, as is taught by the ’533 Patent. EX1003, ¶130.

D. Payne (EX1008)

Payne is a U.S. Patent Application Publication published on filed on March 3, 2016 and published on September 8, 2016. *Payne* is prior art at least under 35 U.S.C. §§102(a)(1) and 102(a)(2). *Payne* describes a hydraulic fracturing system that uses electrical motors, which are controlled by a variable frequency drive, to drive a fracturing pump. EX1008, Abstract. Thus, *Payne* is in a field of art—VFD-controlled electric motors for use with fracturing pumps—that is highly relevant to the ’533 Patent, which describes VFD-controlled, electric motor-driven fracturing pumps. EX1003, ¶132.

E. Yi (EX1009)

Yi is a Chinese Publication published April 23, 2014. *Yi* is prior art at least under 35 U.S.C. §102(a)(1). Petitioner provides an English translation of *Yi* and a supporting translator affidavit. EX1009, EX1010.

Yi discloses a “fracturing pump transmission system” wherein “multiple motors are used to drive the fracturing pump,” which a POSITA would understand is similar to the pump described in the ’533 Patent. EX1010, Abstract; EX1003, ¶134.

F. Jelaska (EX1012)

Jelaska is a selection from the book titled *Gears and Gear Drives* by Damir *Jelaska*. *Jelaska* was publicly available no later than May 16, 2013, and is prior art at least under 35 U.S.C. §102(a)(1). *See* EX1022, ¶¶ 34-40, 62. *Jelaska* describes various gearing systems, their underlying mathematical principles, and their applications. *See generally* EX1012.

G. Tutterow (EX1013)

Tutterow is a book titled *Variable Speed Pumping: A Guide to Successful Applications* prepared at the Europump and Hydraulic Institute. *Tutterow* was publicly available no later than August 24, 2004, and is prior art at least under 35 U.S.C. §102(a)(1). *See* EX1022, ¶¶41-47, 62. *Tutterow* describes fundamental pumping principles and techniques for controlling the speed of pumps. *See generally* EX1013.

H. August (EX1014)

August is a book titled *Dynamics of Planetary Gear Trains*, by R. August *et al*. *August* was publicly available no later than July 2, 1984, and is prior art at least under 35 U.S.C. §102(a)(1). *See* EX1022, ¶¶47-54, 62. *August* describes the star arrangement variation of a planetary gearing configuration. EX1014, 8-9, 149.

I. Morris (EX1015)

Morris is a U.S. Patent Application Publication published on filed on August 31, 2016 and published on December 22, 2016. *Morris* is prior art at least under 35

U.S.C. §§102(a)(1) and 102(a)(2). *Morris* discloses a hydraulic fracturing system wherein a "prime mover" (e.g., an electric motor) is coupled to one or more pumps via "fixed couplings 1412," such as "flex couplings and/or universal joint-based coupling." EX1015, Abstract, [0094].

J. Joyner (EX1016)

Joyner is a U.S. Patent issued on June 21, 2005. *Joyner* is prior art at least under 35 U.S.C. §§102(a)(1) and 102(a)(2). *Joyner* discloses the components of a universal joint. EX1016, 2:58-3:17, Fig. 1.

K. Karassik (EX1017)

Karassik is a book titled *Pump Handbook*, by Igor Karassik *et al*. *Karassik* was publicly available no later than April 29, 2008, and is prior art at least under 35 U.S.C. §102(a)(1). *See* EX1022, ¶¶55-62. *Karassik* describes pump theory and operation, including the use of seven- and nine-plunger pumps. EX1017, 3.11.

L. Summary of Grounds

Ground	Claims	Basis (35 U.S.C. §)	Prior Art
1A	1-4, 10-13	103	*Buckley, Bergan, August, Joyner, Morris*
1B	1, 3, 4, 10, 12, 13	103	*Yi, Bergan, August, Joyner, Morris*
2A	5, 6, 14, 15	103	*Buckley, Bergan, August, Joyner, Morris, Karassik*
2B	5, 6, 14, 15	103	*Yi, Bergan, August, Joyner, Morris, Karassik*

3A	7, 16	103	*Buckley, Bergan, August, Joyner, Morris, Payne*
3B	2, 7, 11, 16	103	*Yi, Bergan, August, Joyner, Morris, Payne*
4A	8, 9, 17, 18, 22	103	*Buckley, Bergan, August, Joyner, Morris, Rosman*
4B	8, 9, 17, 18	103	*Yi, Bergan, August, Joyner, Morris, Rosman*
5A	19	103	*Buckley, Bergan, August, Joyner, Morris, the Knowledge of a POSITA and, in the alternative, Jelaska*
5B	19	103	*Yi, Bergan, August, Joyner, Morris, the Knowledge of a POSITA and, in the alternative, Jelaska*
6A	20, 21	103	*Buckley, Bergan, August, Joyner, Morris, the Knowledge of a POSITA and, in the alternative, Jelaska and Tutterow*
6B	20, 21	103	*Yi, Bergan, August, Joyner, Morris, the Knowledge of a POSITA and, in the alternative, Jelaska and Tutterow*
7A	23	103	*Buckley, Bergan, August, Joyner, Morris, Rosman, Payne*
7B	22, 23	103	*Yi, Bergan, August, Joyner, Morris, Rosman, Payne*
8A	24, 25	103	*Buckley, Bergan, August, Joyner, Morris, Rosman, Payne, Karassik*
8B	24, 25	103	*Yi, Bergan, August, Joyner, Morris, Rosman, Payne, Karassik*

EX1003, ¶19; EX1023 (listing challenged claim elements).

V. LEVEL OF ORDINARY SKILL

A POSITA would have either (1) a Bachelor of Science in Mechanical Engineering, Electrical Engineering, Petroleum Engineering or an equivalent field, as well as at least 2 years of academic or industry experience in the oil and gas industry, including well drilling, completion, or production, or (2) at least four years of industry experience in the oil and gas industry including well drilling, completion, or production. EX1003, ¶49.

VI. CLAIM CONSTRUCTION

Claim terms in IPR are construed according to their "ordinary and customary meaning" to those of skill in the art. *Phillips v. AWH Corp.*, 415 F.3d 1303 (Fed. Cir. 2005) (*en banc*); 37 C.F.R. §42.100(b). Constructions are proposed "only to the extent necessary." *Nidec Motor Corp. v. Zhongshan Broad Ocean Motor Co.*, 868 F.3d 1013, 1017 (Fed. Cir. 2017). For the purposes of this proceeding and the grounds presented herein, Petitioners do not present any constructions. EX1003, ¶50.

VII. INSTITUTION IS PROPER

A. The Fintiv Factors Favor Institution under §314(a)

While Petitioners have moved for a stay (*see* EX1019), the Board has declined to speculate whether the district court would grant a stay. The absence of a stay is, at most, neutral. *See, e.g.*, *HP Inc. v. Slingshot Printing LLC*, IPR2020-01084, Paper 13 (P.T.A.B. Jan. 14, 2021).

The schedule in the parallel litigation is slipping. The Markman hearing originally scheduled for February 20, 2025, was taken off the calendar, and subsequent case deadlines are keyed off the Markman Ruling. EX1020; EX1021, p.3. The current trial date will likely change. Current time-to-trial statistics place the parallel trial in November 2026. EX1055, p.36 (indicating 32-month median time to trial in SDTX); EX1056, 3 (stating median time-to-trial statistics bear on the proximity of the trial date when applying *Fintiv*). Thus, *Fintiv* factor 2 favors institution.

No Markman hearing has been held, and fact discovery does not close until at least July 10, 2025. EX1021. No significant rulings have been made on invalidity or prior art issues. The Board consistently finds that *Fintiv* factor 3 weighs against discretionary denial in similar settings. *See, e.g.*, *Kia Corp. et al., v. Emerging Automotive LLC*, IPR2024-01167, Paper 14, 16-17 (P.T.A.B. Jan. 27, 2025).

Petitioners stipulate that, if the Board institutes IPR in this proceeding on the grounds presented in the Petition, Petitioners will not pursue an invalidity defense in the district court action (C.A. No. 4:24-cv-00839) that the patent claims subject to the instituted IPR are invalid based on the grounds that were raised or any grounds Petitioners reasonably could have raised in the IPR. Thus, *Fintiv* factor 4 weighs "strongly in favor" of not exercising discretion to deny institution. *See Sotera Wireless, Inc. v. Masimo Corp.*, IPR2020-01019, Paper 12, 18-19 (P.T.A.B. Dec. 1,

2020) (precedential as to §II.A); EX1056, 2-3 (stating that a *Sotera* stipulation is "highly relevant" to the *Fintiv* analysis).

B. Institution is Proper under §325(d)

Although *Buckley, Bergan,* and *Rosman* were relied upon by the examiner during prosecution of the '533 Patent, each of the Grounds herein rely upon *August*, *Morris*, and *Joyner* and Grounds 1-9B rely upon or *Yi*, none of which was before the Patent Office during examination. Further, *August*, *Morris*, and *Joyner* disclose those limitations of the '533 Patent that were added to achieve allowance. EX1002, 101, 140-147. The Board has found that the *Becton* factors favor institution in situations where even a single noncumulative secondary reference distinguished the prior-art ground regardless of other overlapping references. *Oticon Medical AB et al. v. Cochlear Limited*, IPR2019-00975, Paper 15 at 9-20 (P.T.A.B. Oct. 16, 2019) (precedential).

VIII. THE CHALLENGED CLAIMS ARE UNPATENTABLE

A. Ground 1A: The Combination of Buckley, Bergan, August, Joyner, and Morris Renders Obvious Claims 1-4 and 10-13

1. Motivation to Combine

a) <u>*Buckley* with *Bergan* and *August*</u>

Buckley discloses using multiple motors to drive a single rotary load, such as a fluid end of a fracturing pump, and that the motors are coupled to the load via a gearbox. EX1004, [0009], Fig. 2; EX1005, 4, 5, Fig. 2. Figure 2 of *Buckley*

Provisional depicts such coupling multiple electric motors to the power end of a drive pump:

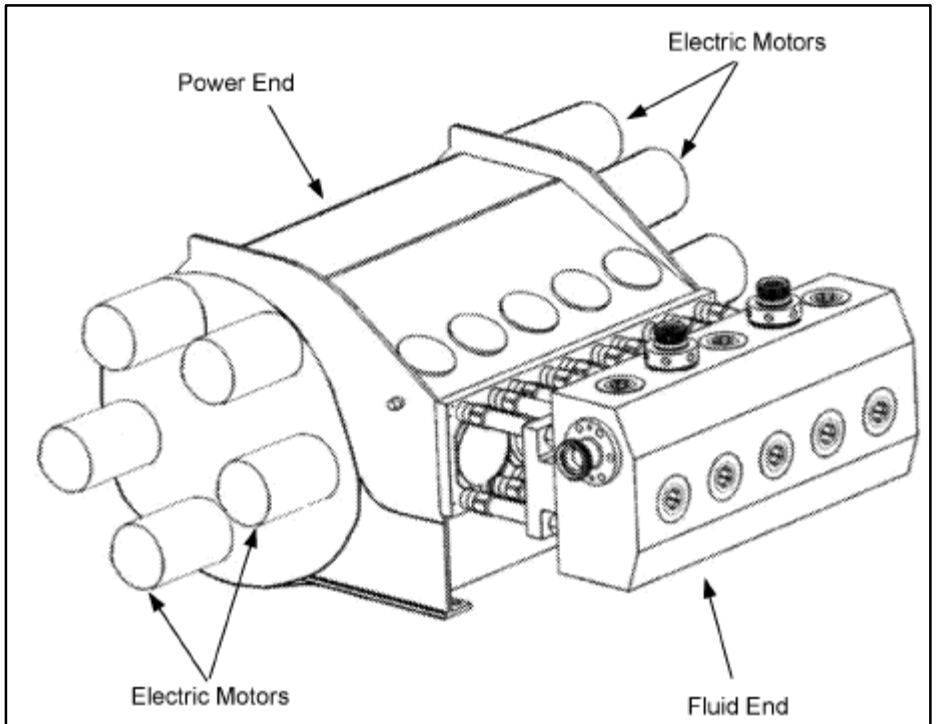

FIG. 2

EX1005, Fig. 2; *see also* EX1004, Fig. 2 (depicting a transmission assembly mounted to a drive pump), Fig. 9 (depicting a transmission assembly comprising multiple motors).

Similarly, *Bergan* teaches the use of a plurality of motors located axially with the shaft of the load and connected to the shaft via gearing systems and used in oil and gas drilling, which is at least a closely related field to hydraulic fracturing. EX1003, ¶151; EX1006, [0030] (describing, with reference to Figure 3, copied

below, that "[m]otors 78 [annotated in red] can be operated to drive rotation of the drum 74 [annotated in blue]").

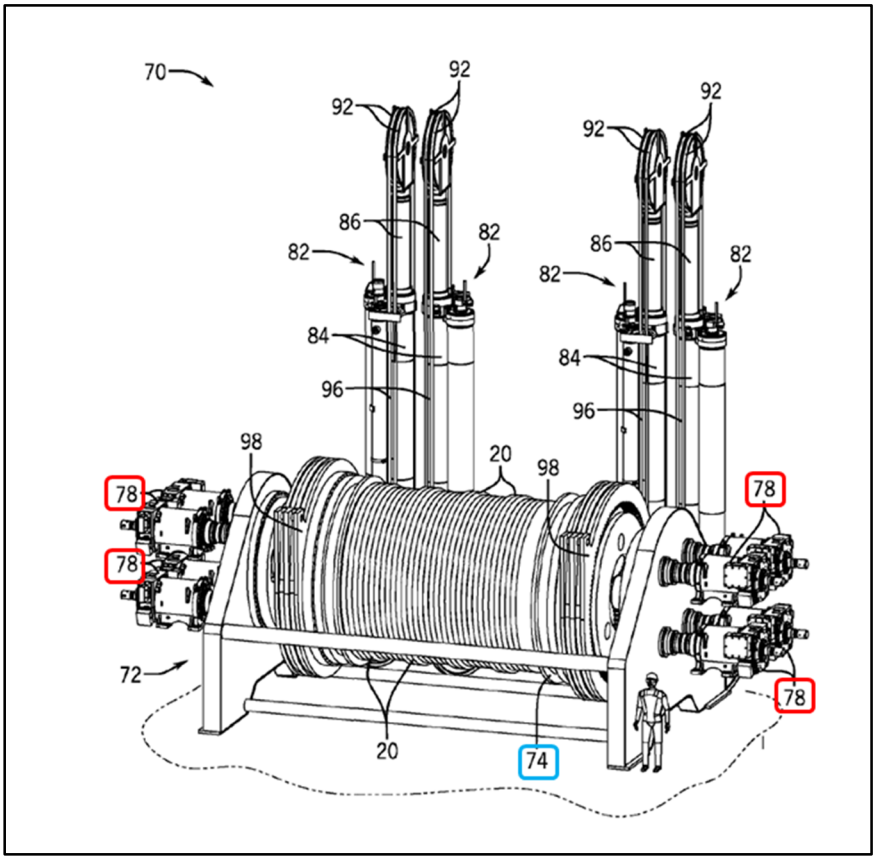

EX1005, Fig. 3 (annotated).

Bergan further teaches the use of a planetary gear system to couple motors to the shaft so the motors can drive the shaft. EX1006, [0032]. Figure 5 depicts this configuration, along with showing that the motors 78 are coupled to input pinions (annotated with red arrows) allowing the motors to drive the gearing system. EX1003, ¶155.

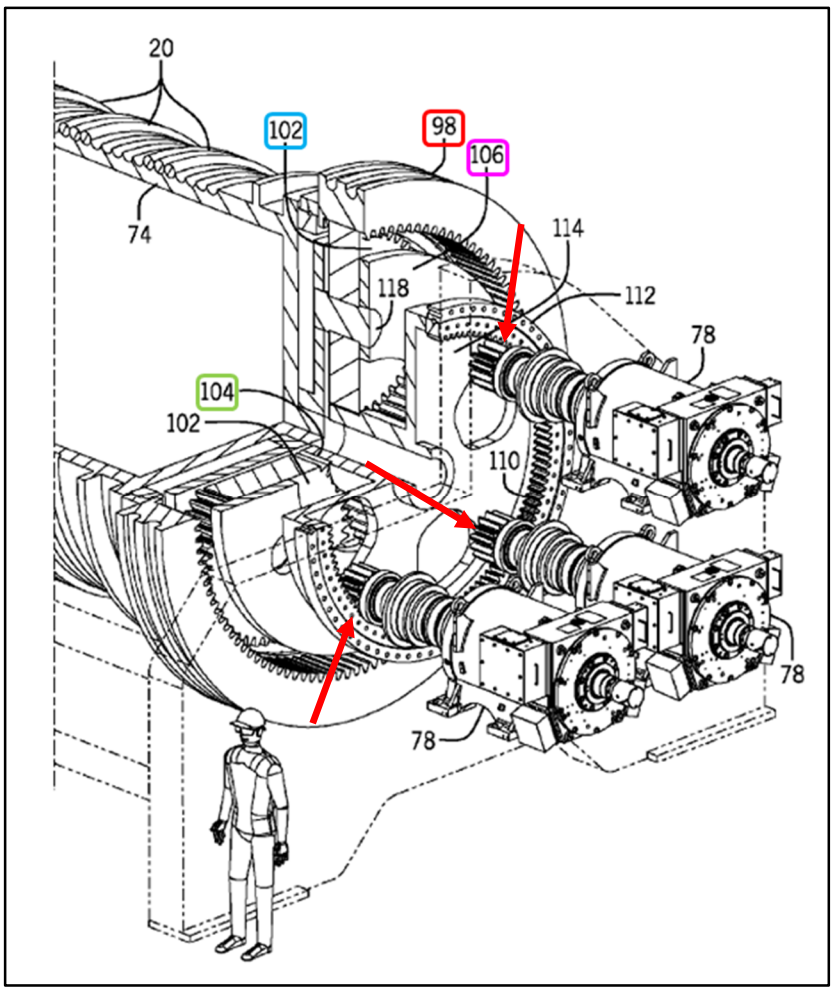

EX1006, Fig. 5 (including ring gear 98 annotated in red, planetary gears 102 annotated in blue, sun gear 104 annotated in green, and carrier 106 annotated in magenta).

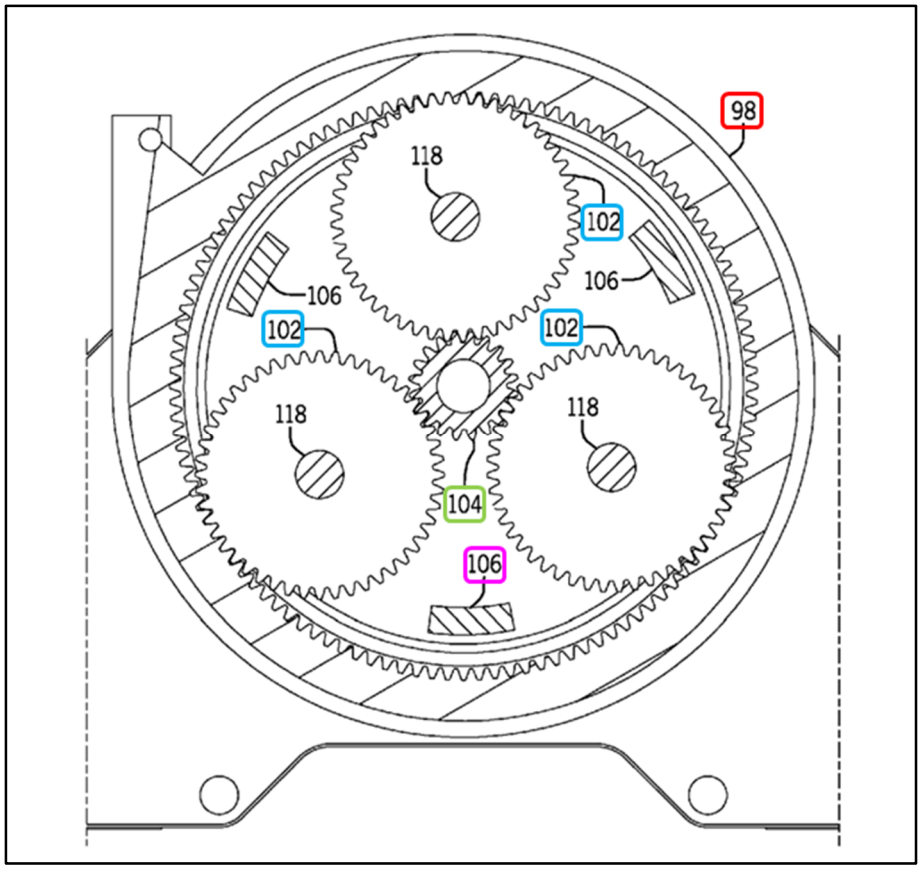

Id., Fig. 6 (annotated).

A POSITA would have been motivated to combine *Bergan*'s planetary gear system, with appropriate changes to gear sizes that would have been obvious to a POSITA, with *Buckley*'s pump system to couple *Buckley*'s multiple motors with its pump crankshaft via *Bergan*'s planetary gear system, including *Bergan*'s pinion. EX1003, ¶156. *Buckley* provides an express motivation to combine with *Bergan*'s planetary gear system. *Buckley* discloses that its "motors are arranged around a gearbox which is used to convert the rotary motion of the electric motors into linear motion for operation of the plungers in the fluid ends." EX1004, [0009]; EX1005, 5 ("Selected gearing may be used to assist in mating the electric motors to the power

end. … Also a transfer gear system can be used if required."). A POSITA would have been motivated to understand different gearing configurations to connect multiple motors to a single load, and would have understood that *Bergan* offers one such solution. EX1003, ¶150.

Further, incorporating *Bergan*'s planetary gear train and use of pinions to connect the motors to the load is applying a known technique (planetary gear trains and motors with pinions) to improve similar devices (*Buckley*'s gearbox) in the same way. EX1003, ¶156; *KSR Int'l Co. v. Teleflex Inc.*, 550 U.S. 398, 417 (2007). The results of the combination would be predictable: transfer of rotational energy from *Buckley*'s motors to *Buckley*'s pump with straightforward, predictable changes in gear ratios and corresponding changes in speed and torque available. EX1003, ¶156. Further, *Bergan*'s planetary gear system and motors with pinions was known in one field of endeavor (oil and gas drilling, as taught by *Bergan*) and would have prompted a POSITA to use it in either the same field or a different one (oil and gas fracturing) based on design incentives (ability to connect multiple motors to a single load and the advantages of a planetary gear train) because the variations used for a pump (as in *Buckley*) would have been predictable to one of ordinary skill in the art and would obtain the predictable result of transferring rotational energy from *Buckley*'s motors to *Buckley*'s pump. *Id.*; *KSR Int'l*, 550 U.S. at 417. Further, modifying *Buckley*'s pumping system to use *Bergan*'s planetary gearing system

requires a simple substitution of one known element (*Bergan*'s planetary gearing system) for another (*Buckley*'s gearing system) to obtain the predictable result of transferring rotational energy from *Buckley*'s motors to *Buckley*'s pump. EX1003, ¶156; *KSR Int'l*, 550 U.S. at 416. Accordingly, a POSITA would have been motivated to combine *Buckley* and *Bergan* and would have had a reasonable expectation of success in doing so. EX1003, ¶156.

A POSITA would have been motivated to further combine the *Buckley-Bergan* combination with *August*. *August* teaches a well-known, relatively minor variation of the planetary gearing configuration, referred to as a "star arrangement," wherein the planetary gears are instead coupled to both a ***fixed*** carrier and a ring gear, where the ring gear is driven by the rotation of the planetary gears to produce an output rotation. EX1003, ¶157. Under the star arrangement, the planetary gear train's gear ratio changes from from $\frac{N_R}{N_s} + 1$ (in the traditional planetary gear configuration) to $-\frac{N_R}{N_s}$ (in the modified variation) where N_R and N_S are the number of teeth of the ring gear and sun gear, respectively. EX1014, 151. Figure B-1 of *August* depicts this configuration from a side section view:

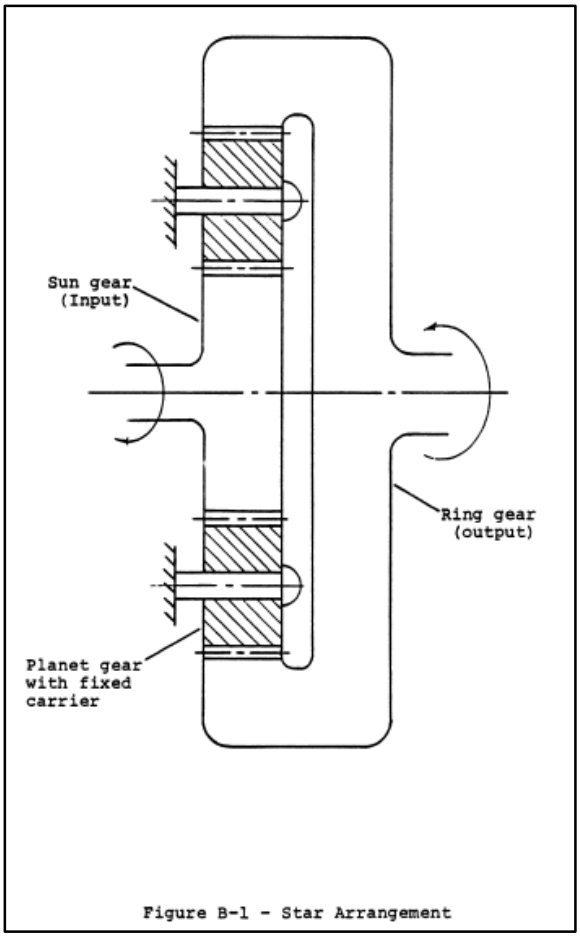

EX1014, 149.

A POSITA would have been motivated to combine the *Buckley-Bergan* combination with *August*'s star arrangement, which would result in a modified planetary gearing system wherein *Bergan*'s planetary gears 102 are coupled to a fixed carrier (as taught by *August*) and a rotatable ring gear (as taught by *August*), where the rotation of the ring gear, rather than the rotation of *Bergan*'s carrier 106, would serve as the output of the planetary gearing system to drive the pump crankshaft. EX1003, ¶159. Such a modification would involve a simple substitution of one known element (*August*'s star arrangement) for another (*Bergan*'s fixed-

carrier gearing configuration) to obtain the predictable result of driving output rotation through *August*'s ring gear to *Buckley*'s pump crankshaft. *Id.*; *KSR Int'l*, 550 U.S. at 416-17. Further, August's star arrangement results in a lower gear ratio compared to the traditional planetary gearing configuration ($-\frac{N_R}{N_S}$ instead of $\frac{N_R}{N_S}+1$), which is useful in when operating higher speed, lower torque motors (*e.g.*, standard AC motors) to operate a lower speed, higher torque loads (*e.g.*, a fracturing pump), as done in *Buckley*. EX1003, ¶¶157-159.

Accordingly, a POSITA would have been motivated to combine *Buckley*, *Bergan*, and *August* and would have had a reasonable expectation of success in doing so. *Id.*, ¶159.

b) <u>*Morris* and *Joyner*</u>

Morris discloses a hydraulic fracturing system wherein an electric motor is coupled to one or more pumps via "fixed couplings," such as "flex couplings and/or universal joint-based coupling." EX1015, Abstract, [0094]. A POSITA would have searched for other references to better understand details of such couplings that are not described in *Morris*. EX1003, ¶160. One such reference is *Joyner*, whose disclosure of particular details about universal joints and their components would be useful to a POSITA looking to implement the teachings of *Morris* to a practical system. *Id.*; EX1016, 2:58-3:18.

Further, combining *Joyner*'s teachings regarding universal joint components to *Morris*'s universal joint-based coupling configuration is merely combining prior art elements (universal joint components as taught by *Joyner*) according to known methods (*Morris*'s universal joint-based coupling) to yield predictable results (producing a universal joint-based coupling to join two rotating shafts). EX1003, ¶162; *KSR Int'l*, 550 U.S. at 416-17. Accordingly, a POSITA would have been motivated to combine *Joyner*'s teachings regarding universal joint components with the *Morris*'s universal joint-based coupling and would have reasonably expected success in doing so. EX1003, ¶162.

c) The *Buckley-Bergan-August* Combination with the *Morris-Joyner* Combination

A POSITA would have been motivated to combine the pumping system of the *Buckley-Bergan-August* combination with the fixed couplings of *Morris-Joyner* combination such that the fixed couplings join the output shaft of the *Buckley-Bergan-August* combination's planetary gearing system (*i.e.*, the output shaft of *August*'s ring gear) with *Buckley*'s pump crankshaft. EX1003, ¶163. First, design incentives and market forces would have motivated a POSITA to incorporate *Morris*'s fixed coupling configuration with the *Buckley-Bergan-August* combination's pumping configuration. As explained in *Morris*, *Morris*'s fixed coupling configuration allows for easier alignment of the prime mover (including the gear train) and the pump, thereby limiting damage caused by vibration of the

pump during operation. EX1015, [0086]-[0087], [0094]. A POSITA implementing the *Buckley-Bergan-August* pumping configuration would recognize that such misalignment mitigation would be useful to help avoid damage to the *Bergan-August* planetary gearing configuration and its output shaft that would arise from the vibration of *Buckley*'s pump. EX1003, ¶163.

Second, incorporating the *Morris-Joyner* combination's universal joint-based coupling configuration is applying a known technique (universal joint-based couplings between two rotating shafts) to improve similar devices (the *Buckley-Bergan-August* pumping system) in the same way. *Id.*, ¶164; *KSR Int'l*, 550 U.S. at 417. The results of the combination would be predictable: transfer of rotational energy from the *Bergan-August* planetary gearing system's motors to *Buckley*'s pump crankshaft with universal joint-based couplings. EX1003, ¶164. Accordingly, a POSITA would have been motivated to combine the *Buckley-Bergan-August* combination with the *Morris-Joyner* combination and would have had a reasonable expectation of success in doing so. *Id.*

2. Claim 1

a) <u>1[p]: A hydraulic fracturing system for fracturing a subterranean formation comprising:</u>

Buckley describes a pumping system that "relates generally to hydraulic fracturing in oil and gas wells, and in particular to an electric drive pump used to drive a fluid end for the pumping of a fracturing fluid into a well." EX1004, [0001];

EX1005, 2. *Buckley* explains that hydraulic fracturing involves "pumping fluid into a wellbore at high pressure" to "fracture[], or create[] fissures, in the formation." EX1004, [0002]; EX1005, 2; EX1003, ¶166.

> b) <u>1[a]: a multi-plunger hydraulic fracturing pump configured to pump fluid to a wellbore associated with the subterranean formation, the multi-plunger hydraulic fracturing pump comprising a pump crankshaft;</u>

The '533 Patent admits in its Background section that "[h]ydraulic fracturing operations commonly use diesel-powered pumps to transmit fluid media down the well bore." EX1001, 1:43-44. Further, the '533 Patent admits that multi-plunger hydraulic fracturing pumps were known. *Id*., 5:8-10.

Consistent with this admission in the Background of the '533 Patent, *Buckley* discloses a multi-plunger hydraulic pump that meets the elements of Limitation 1[a].

Buckley discloses "an electric drive pump used to drive a fluid end of the pump of a fracturing fluid into a well." EX1004, [0001]; EX1005, 2. Further, *Buckley* explains that hydraulic fracturing involves "pumping fluid into a wellbore at high pressure (sometimes as high as 50,000 PSI)" to "fracture[], or create[] fissures, in the formation." EX1004, [0002]; EX1005, 2. A POSITA would have understood that *Buckley* discloses a hydraulic pump that pumps fluid into a wellbore associated with the well at high pressure to fracture the subterranean formation. EX1003, ¶168.

Further, a POSITA would have understood that *Buckley*'s electric drive pump is a "multi-plunger hydraulic pump." Although *Buckley* does not specifically

identify its electric drive pump as a "multi-plunger pump," a POSITA would have understood that *Buckley*'s electric drive pump comprises five ("multiple") plungers, which are annotated with red arrows in the below copies of the pumps disclosed by *Buckley* and *Buckley Provisional*:

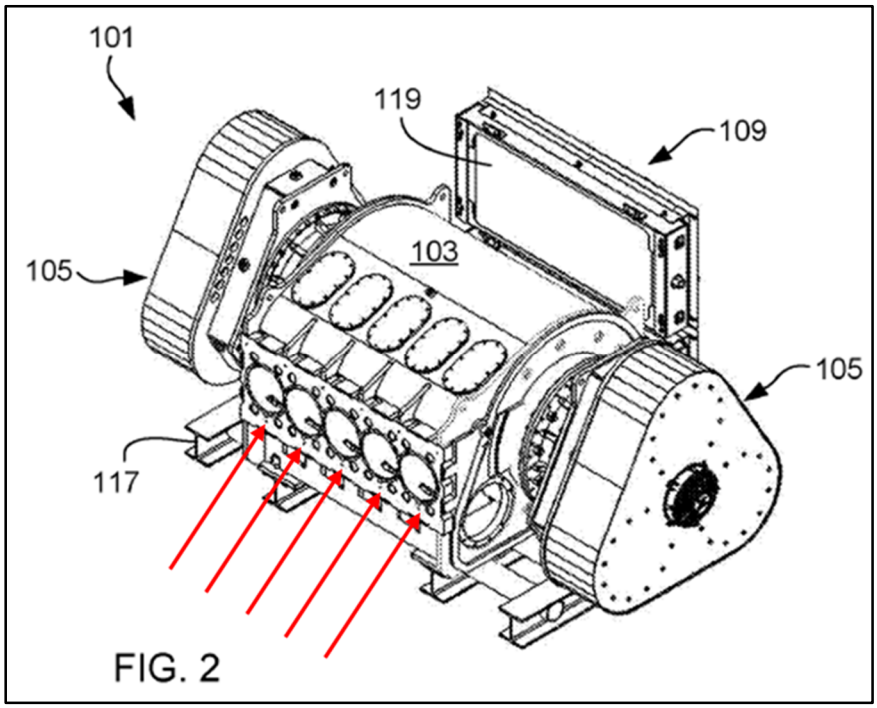

EX1004, Fig. 2 (annotated); EX1003, ¶169.

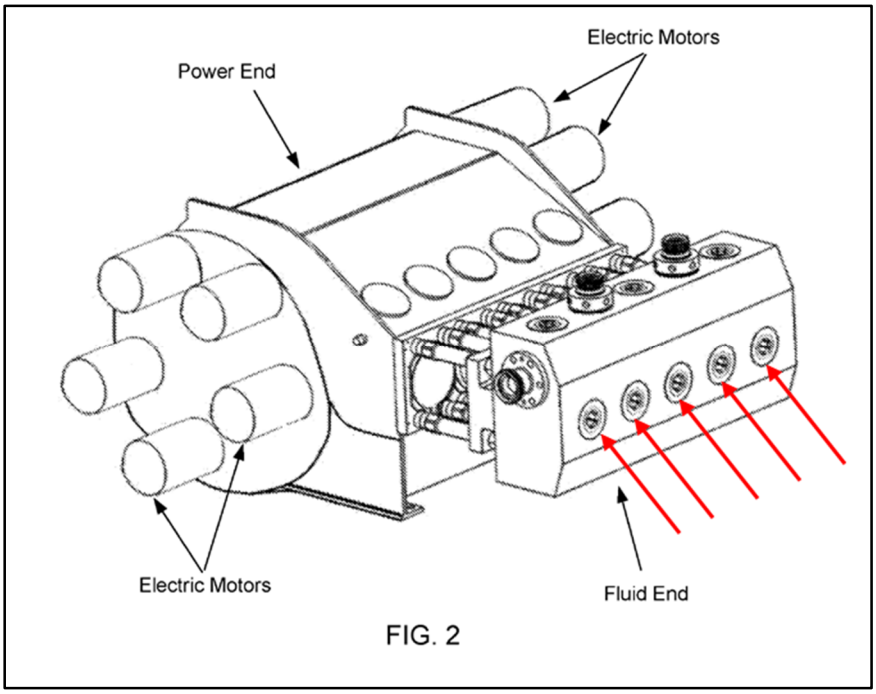

EX1005, Fig. 2.

Further, a POSITA would have understood that *Buckley*'s electric drive pump comprises a "pump crankshaft." Although *Buckley* does not specifically identify its electric drive pump as comprising a "pump crankshaft," a POSITA would have understood that *Buckley*'s electric drive pump comprises a crankshaft, which is annotated with a red line in the below copies of the pumps disclosed by *Buckley* and *Buckley Provisional*:

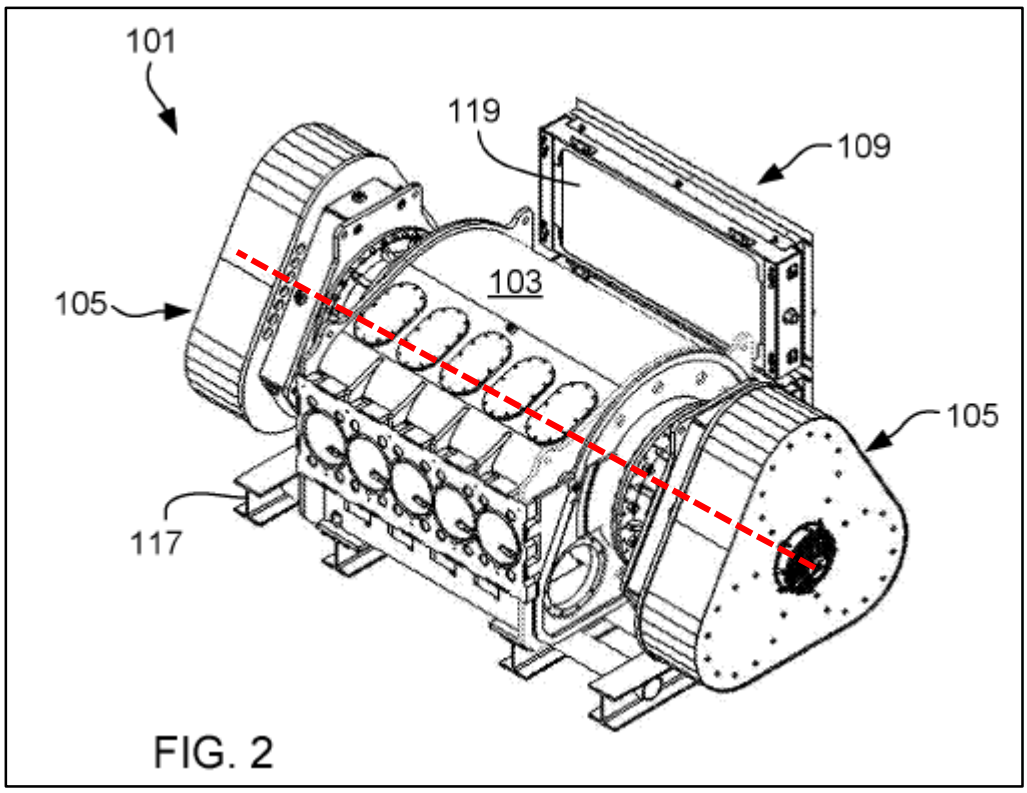

EX1004, Fig. 2 (annotated).

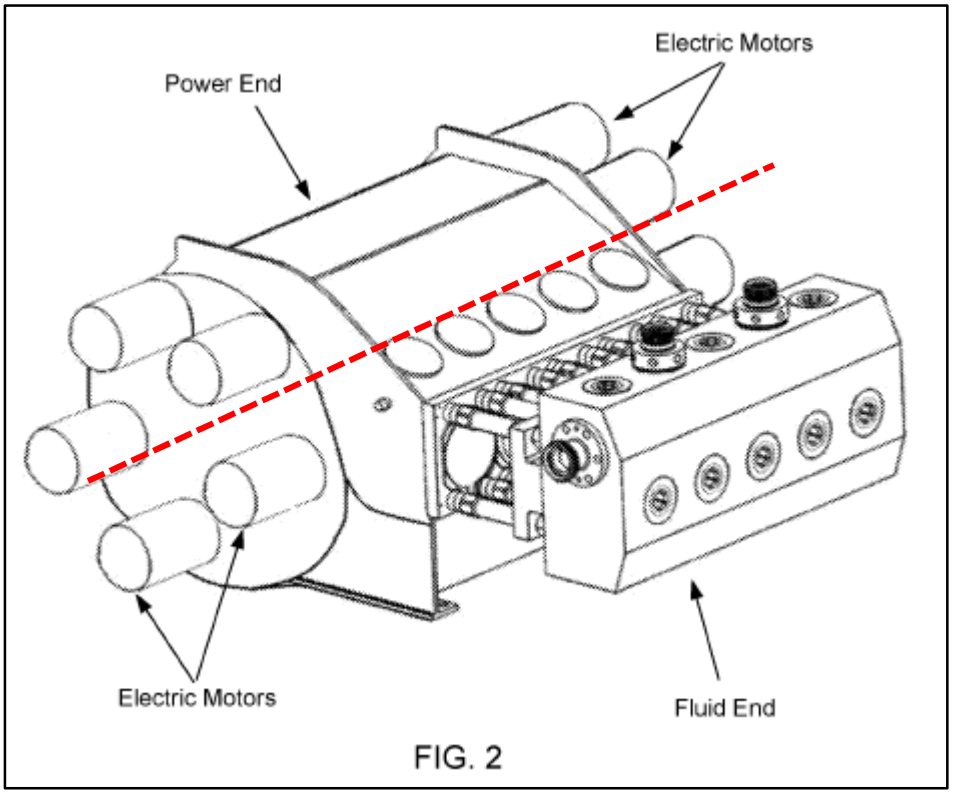

EX1005, Fig. 2 (annotated); EX1003, ¶172.

This understanding of *Buckley* is consistent with the examiner's rejection of Limitation 1[a] during prosecution, where the examiner found that it is "inherent that crankshaft runs down axis of power end" of the pump as annotated, which was not contested by the applicant. EX1002, 140-145, 158-159.

c) <u>1[b]: a plurality of motors positioned to power the multi-plunger pump; and</u>

Buckley discloses that its electric drive pump system includes "a plurality of individual motors in selective configurations that work together to provide power to a power end," and that the motors "are arranged around a gearbox which is used to convert the rotary motion of the electric motors into linear motion for operation of the plungers in the fluid end" of the electric drive pump. EX1004, [0009]; *see also* EX1005, 4 ("This system includes a series of electric motors of sufficient number needed to give the required output to operate the one or more fluid ends."). Figure 2 of *Buckley*, annotated below, shows transmission assembly 105 (annotated in red) mounted to drive the electric drive pump:

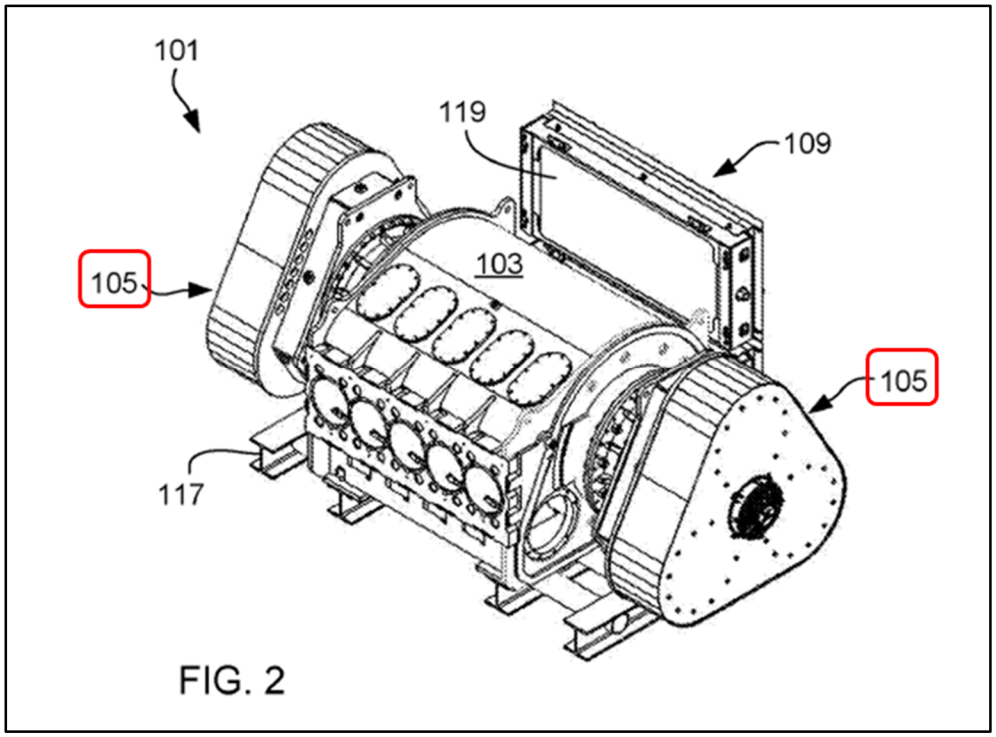

EX1004, Fig. 2 (annotated). And Figure 9 of *Buckley*, annotated below, shows that the transmission assembly 105 (annotated in red) comprises a plurality of motors 111 (annotated in blue):

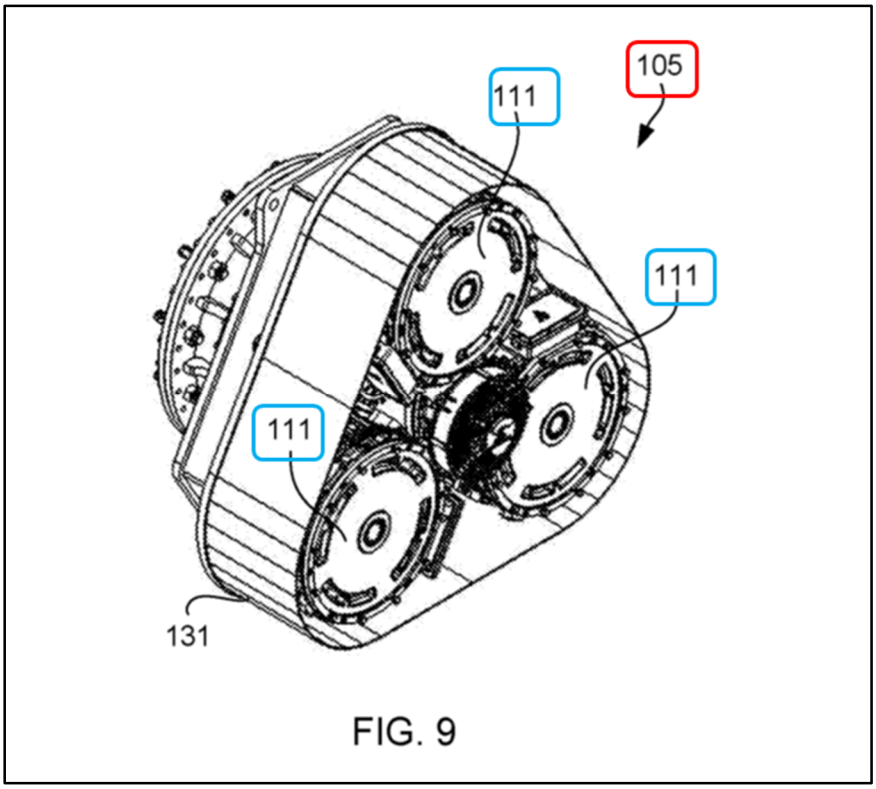

Id., Fig. 9 (annotated).

Similarly, Figure 2 of *Buckley Provisional*, annotated below, shows "series of electric motors of sufficient number needed to give the required output to operate the one or more fluid ends." EX1005, 4.

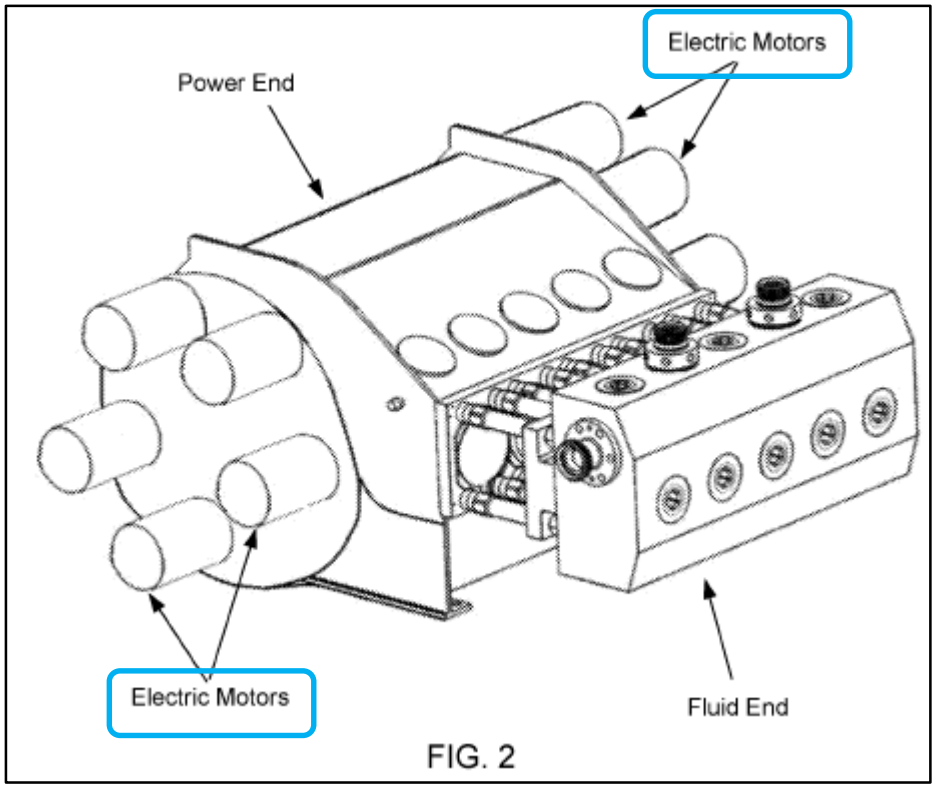

EX1005, Fig. 2 (annotated).

Accordingly, *Buckley* discloses this limitation.

d) <u>1[c]: a planetary gear train positioned to translate power from the plurality of motors to the pump crankshaft of the multi-plunger hydraulic fracturing pump,</u>

Bergan discloses, with respect to Figures 4-6, a planetary gear system that includes "ring gear 98 [annotated in red below], planetary gears 102 [annotated in blue], and a sun gear 104 [annotated in green]. A carrier 106 [annotated in magenta] is coupled to rotate with the planetary gears 102 as they orbit the sun gear 104 in operation," the rotation of which drives the rotation of the load. EX1006, [0032]. Figure 5 of *Bergan*, annotated below, depicts this configuration:

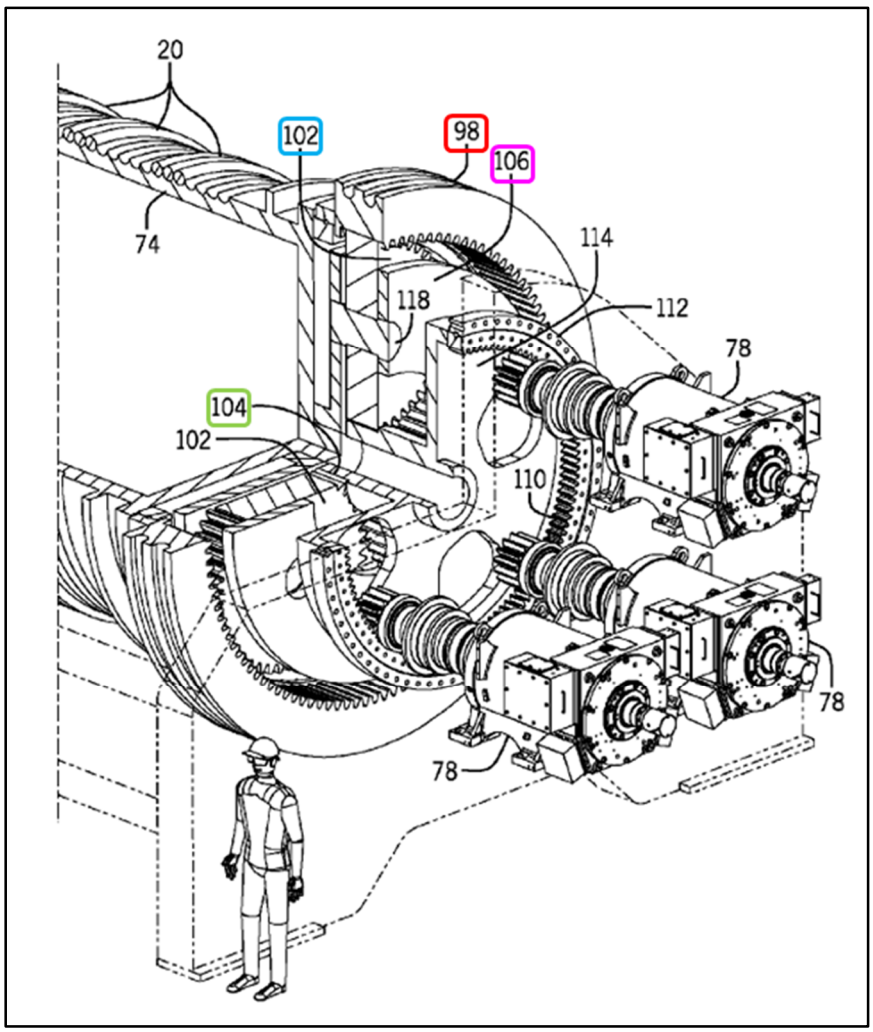

EX1006, Fig. 5 (annotated).

August describes a well-known variation of the planetary gearing configuration, referred to as a "star arrangement," wherein the planetary gears are coupled to both a fixed carrier and a ring gear, and the ring gear is driven by the rotation of the planetary gears to produce an output rotation. EX1003, ¶181. Figure B-1 of *August* depicts this configuration from a side section view:

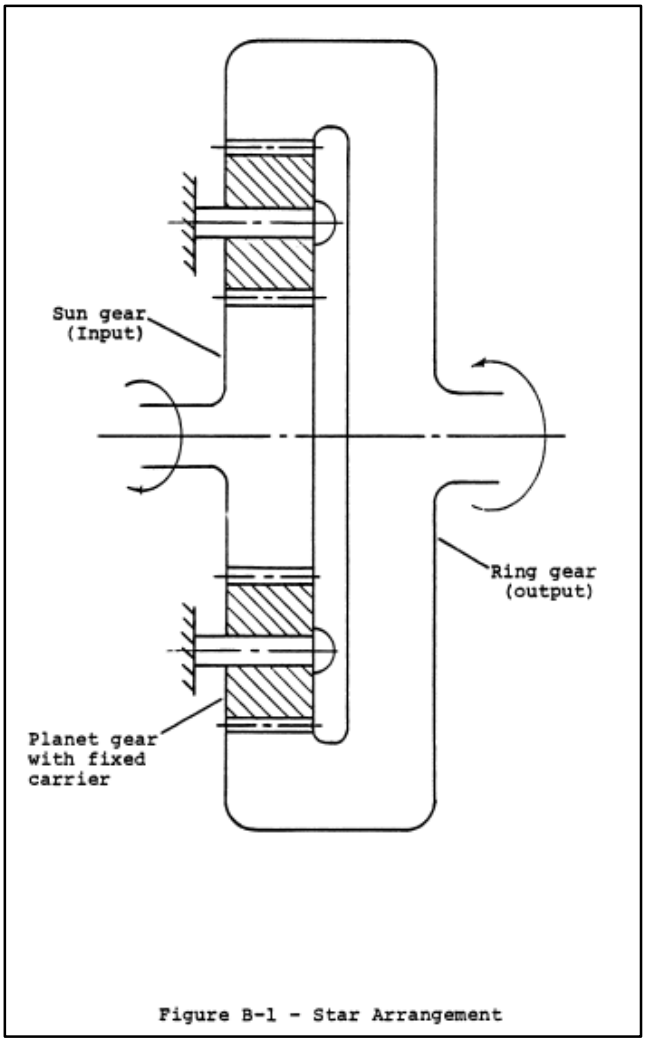

EX1014, 149.

As discussed above, modifying the *Buckley-Bergan* combination in view of *August*'s star arrangement would result in a well-known, relatively minor variation of a planetary gearing system wherein *Bergan*'s planetary gears 102 are coupled to a fixed carrier and a ring gear (as taught by *August*), where the rotation of the ring gear, rather than the rotation of *Bergan*'s carrier 106, would serve as the output of the planetary gearing system to drive the pump crankshaft. *Supra*, VIII.A.1.(b). Annotated Figure B-1 of *August* below shows how *August*'s ring gear may interact

with *Bergan*'s gearing (including sun gear 104, annotated in green, and planetary gears 102, annotated in blue) and output to *Buckley*'s pump crankshaft[2] (annotated in red) when combined:

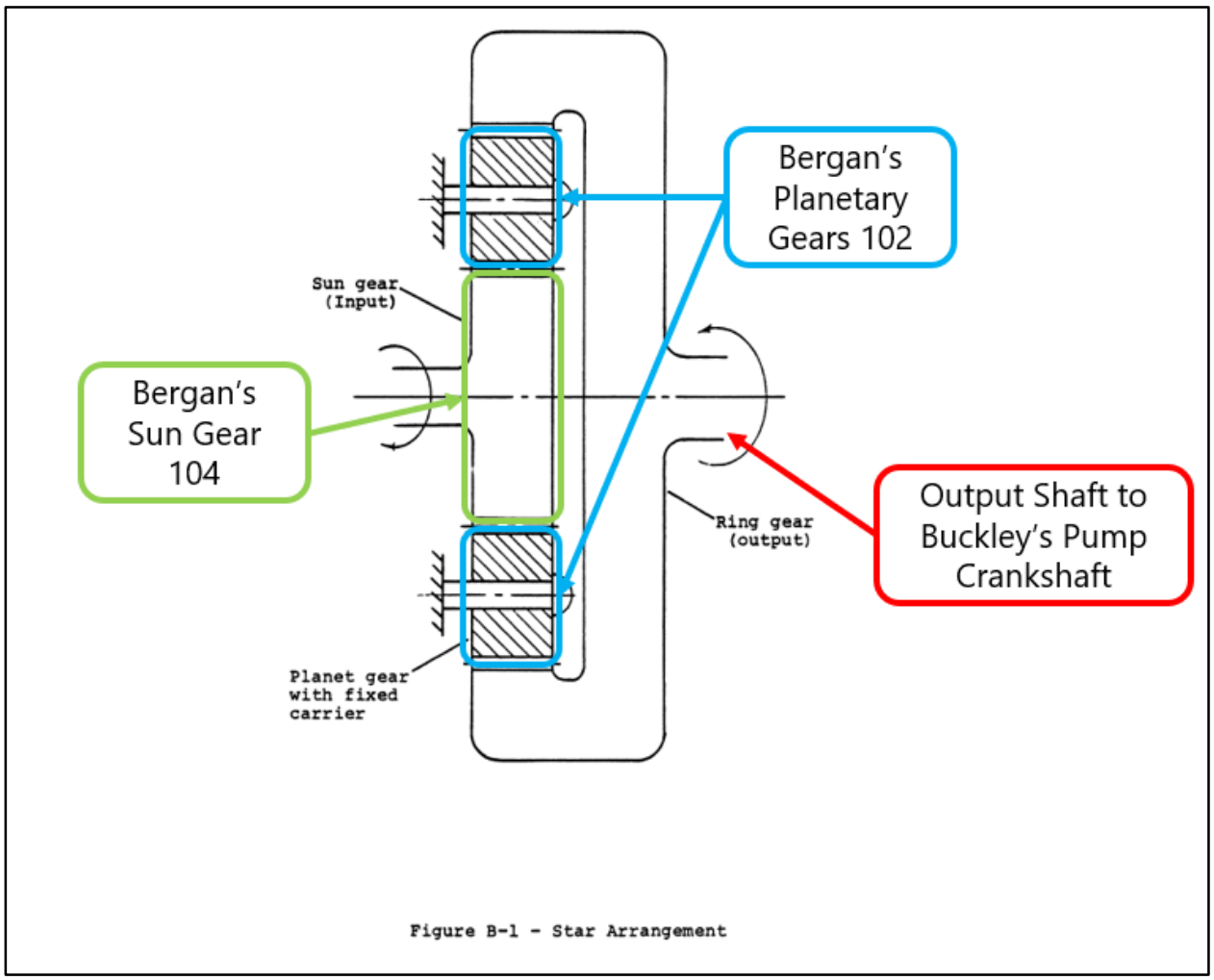

EX1014, Fig. B-1 (annotated); EX1003, ¶182.

[2] Under an example *Buckley-Bergan-August-Morris-Joyner* combination, *August*'s ring gear may output to *Buckley*'s pump crankshaft via the universal joint-based coupling taught by the *Morris-Joyner* combination. *See infra*, VIII.A.2.(f).

Accordingly, the *Buckley-Bergan-August* planetary gear train translates power from the plurality of motors to *August*'s ring gear, which translates power to the crankshaft of *Buckley*'s fracturing pump in the combination.

e) <u>1[d]: the planetary gear train comprising: a plurality of input pinion gears connected to the plurality of motors;</u>

Bergan discloses a planetary gear system used to couple multiple motors to a load element. *See supra*, VIII.A.2.(d). Figure 5 of *Bergan*, annotated below, further shows that the motors 78 are each connected to an "input pinion" (not numbered, annotated with red arrows) allowing the motors to drive the gearing system. A POSITA would have recognized those elements, which mesh with the larger gear 110 as pinions gears, because a "pinion" was known to be "a gear with a small number of teeth designed to mesh with a larger wheel or rack." EX1003, ¶189 (citing EX1011).

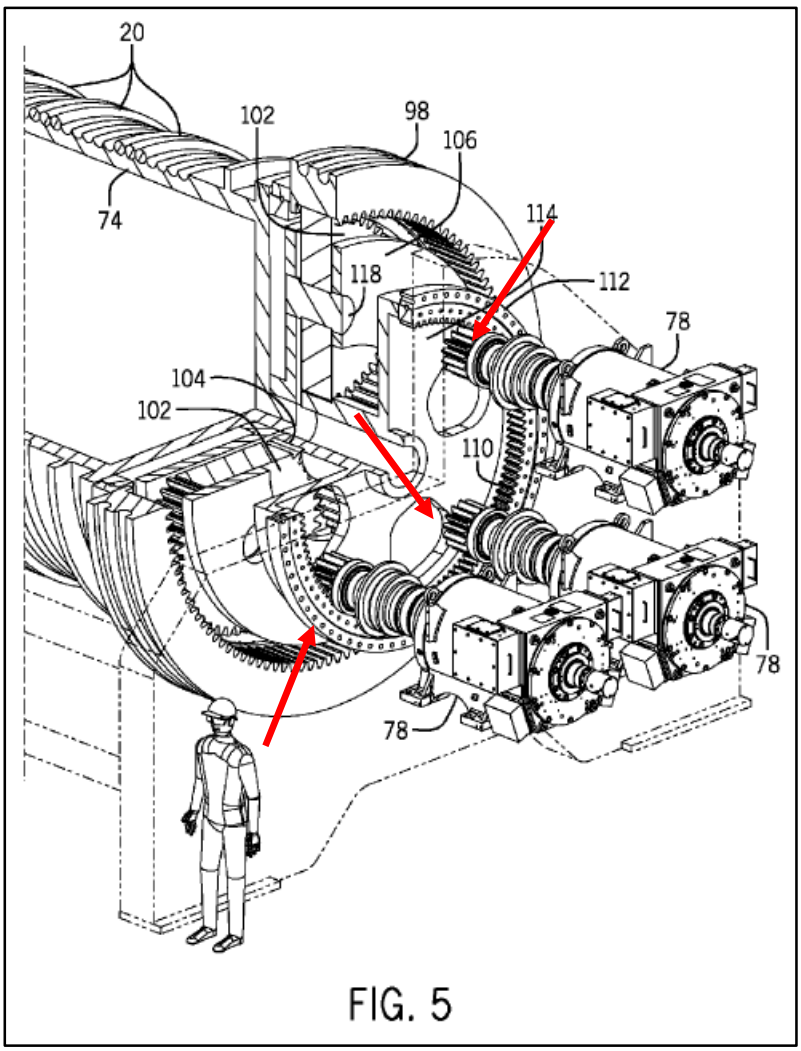

EX1006, Fig. 5 (annotated).

The *Buckley-Bergan-August* combination therefore renders this limiation obvious because a POSITA would have understood that *Buckley*'s motors are connected to *Bergan*'s pinions, which are part of the *Bergan-August* modified planetary gear system discussed above with reference to Limitation 1[c]. EX1003, ¶190.

f) 1[e]: and a final drive gear connected to the pump crankshaft of the multi-plunger hydraulic fracturing pump by a plurality of arms extending from the final drive gear.

This limitation includes the "by a plurality of arms extending from the final drive gear" language that was amended into the independent claims during prosecution and resulted in allowance. *See supra*, III.B; EX1002, 101, 140-147.

First, *August*, in combination with the *Buckley-Bergan* system, teaches "a final drive gear." Modifying the *Buckley-Bergan* combination in view of *August*'s star arrangement would result in a well-known variation of a planetary gearing system wherein *Bergan*'s planetary gears 102 are coupled to a fixed carrier and a ring gear (as taught by *August*), where the rotation of the ring gear would serve as the output of the planetary gearing system to drive the pump crankshaft. *Supra*, VIII.A.1.(a), VIII.A.2.(d). Accordingly, a POSITA would have recognized that *August*'s ring gear teaches a "final drive gear." EX1003, ¶192.

Second, the *Morris-Joyner* combination teaches combining two shafts via a plurality of arms. *Morris* discloses a hydraulic fracturing system wherein a "prime mover" is coupled to one or more pumps via "fixed couplings," such as a "universal joint-based coupling," which mitigates issues arising from misalignment between the prime mover and the pump. EX1015, Abstract, [0094].

When the fixed coupling is implemented as a "universal joint-based coupling," as taught by *Morris*, a POSITA would have understood that the fixed

coupling comprises "a plurality of arms." EX1003, ¶194. As explained by *Joyner*, universal joints are "are well known devices that provide a driving connection between two members that are adapted to rotate about non-aligned axes of rotation." EX1016, 1:16-18. Figure 1 of *Joyner* depicts the typical components of a universal joint, including a "yoke 11 including a sleeve portion 12 having a pair of opposed arms 12 and 14 extending therefrom." *Id*., 2:58-64.

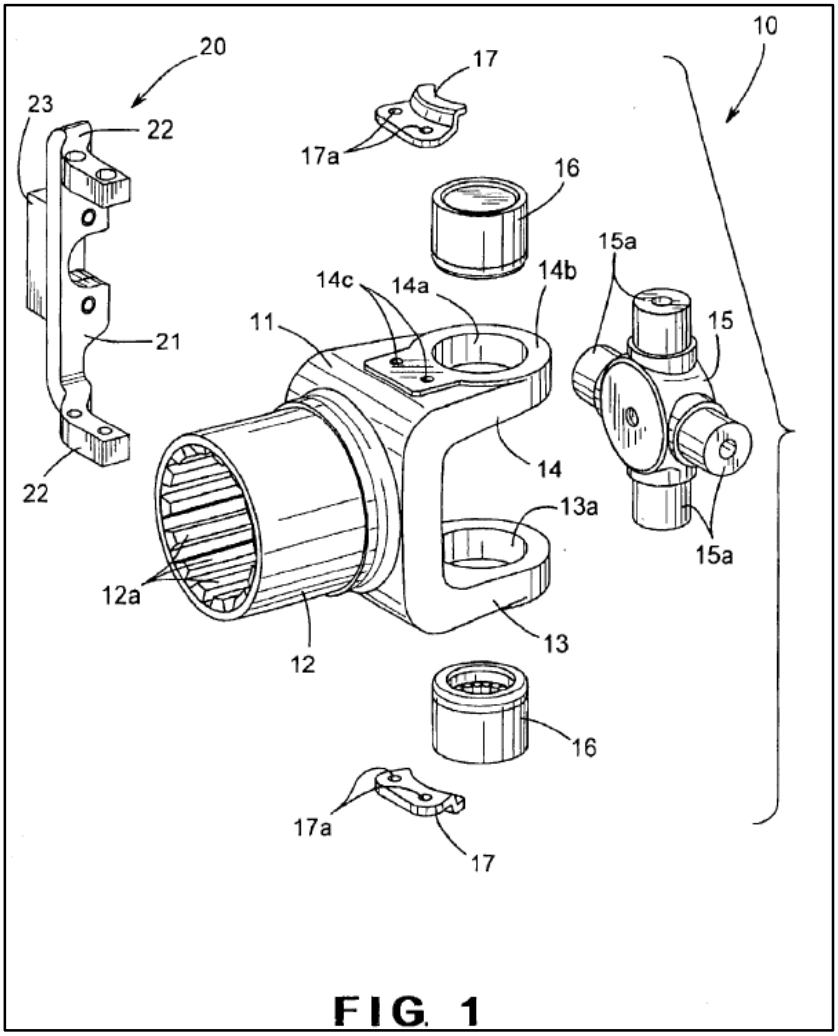

FIG. 1

Id., Fig. 1, 2:58. *Joyner* further explains that the sleeve portion 12 engages "with a drive shaft (not shown) or other member," and that the arms of the yoke are coupled

to opposite trunnions 15a of cross 15. *Id*., 2:64-3:1, 3:19-27. A POSITA would have understood that a complete universal joint comprises a second yoke coupled to cross 15 (*e.g.*, to the horizontal trunnions 15a when the first yoke is coupled to the vertical trunnions 15a) such that two drive shafts would be coupled by the universal joint. EX1003, ¶195.

When the *Buckley-Bergan-August* pumping system is combined with the *Morris-Joyner* universal joint-based coupling, a POSITA would have understood that the output shaft of *August*'s ring gear ("final drive gear") would be coupled to the crankshaft of *Buckley*'s pump ("pump crankshaft of the multi-plunger hydraulic fracturing pump") via a universal joint that comprises multiple arms ("by a plurality of arms extending from the final drive gear"), as taught by the *Morris-Joyner* combination, to limit damage caused by misalignment between the ring gear's output shaft and the pump crankshaft (as taught by *Morris*). EX1003, ¶196.

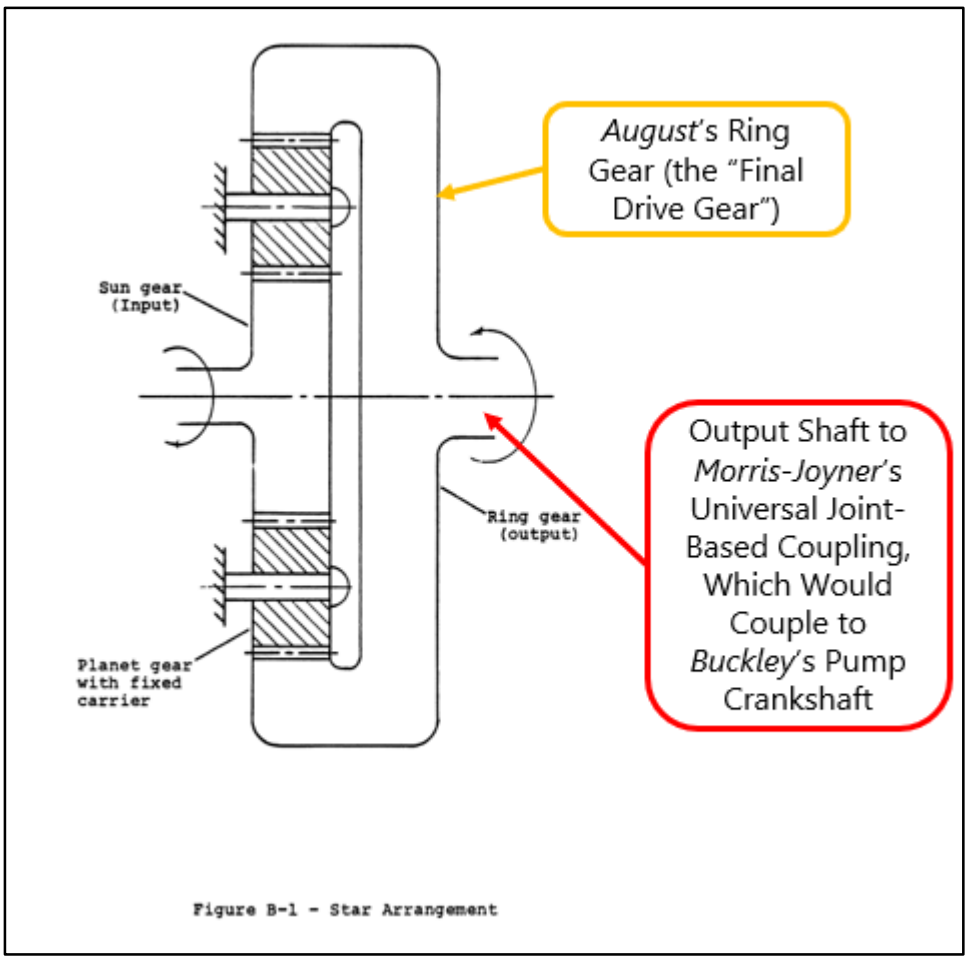

EX1014, Fig. B-1 (annotated).

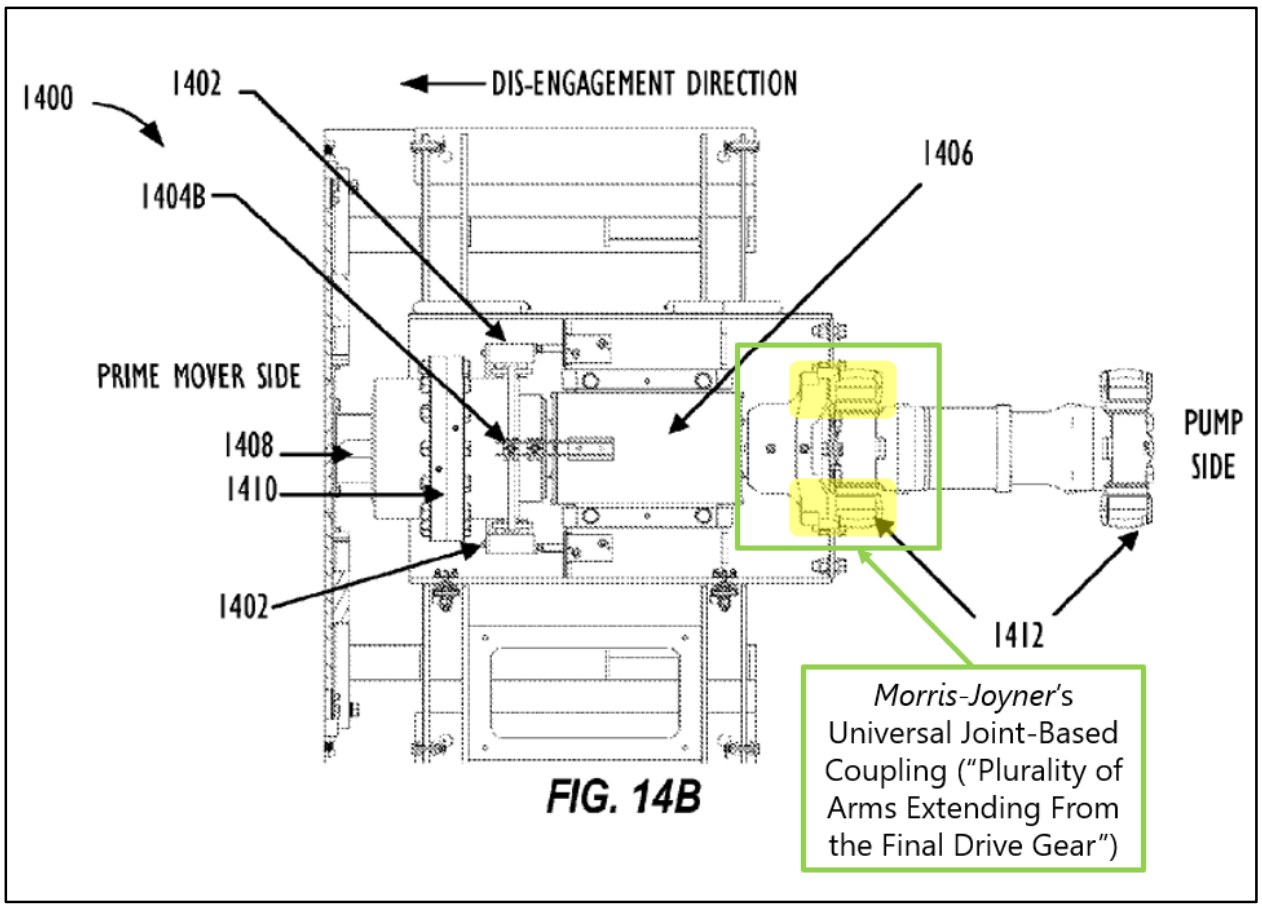

EX1015, Fig. 14B (annotated, highlighting in yellow the arms of one yoke of the universal joint-based coupling).

Accordingly, the *Buckley-Bergan-August-Morris-Joyner* combination renders obvious Limitation 1[e], which, as discussed above, includes the "by a plurality of arms extending from the final drive gear" language that was amended into the independent claims during prosecution and resulted in allowance. *See supra*, III.B; EX1002, 101, 140-147. And as noted above in Section III.B, the '533 Patent does not include any discussion of the "plurality of arms extending from the final

drive gear," and Figure 1 of the patent contains the only depiction of final drive gear 110.

3. Claim 2

a) The hydraulic fracturing system of claim 1, wherein the plurality of motors comprises a plurality of electric motors, and each of the plurality of input pinion gears is connected to a respective one of the plurality of electric motors.

Buckley discloses that the multiple motors used to power the drive pump are "electric motors." EX1004, [0009]; EX1005, 4; *see supra*, VIII.A.2.(c).

And *Bergan* discloses that each motor is connected to the planetary gear system via a respective pinion, as depicted in Figure 5 of *Bergan*:

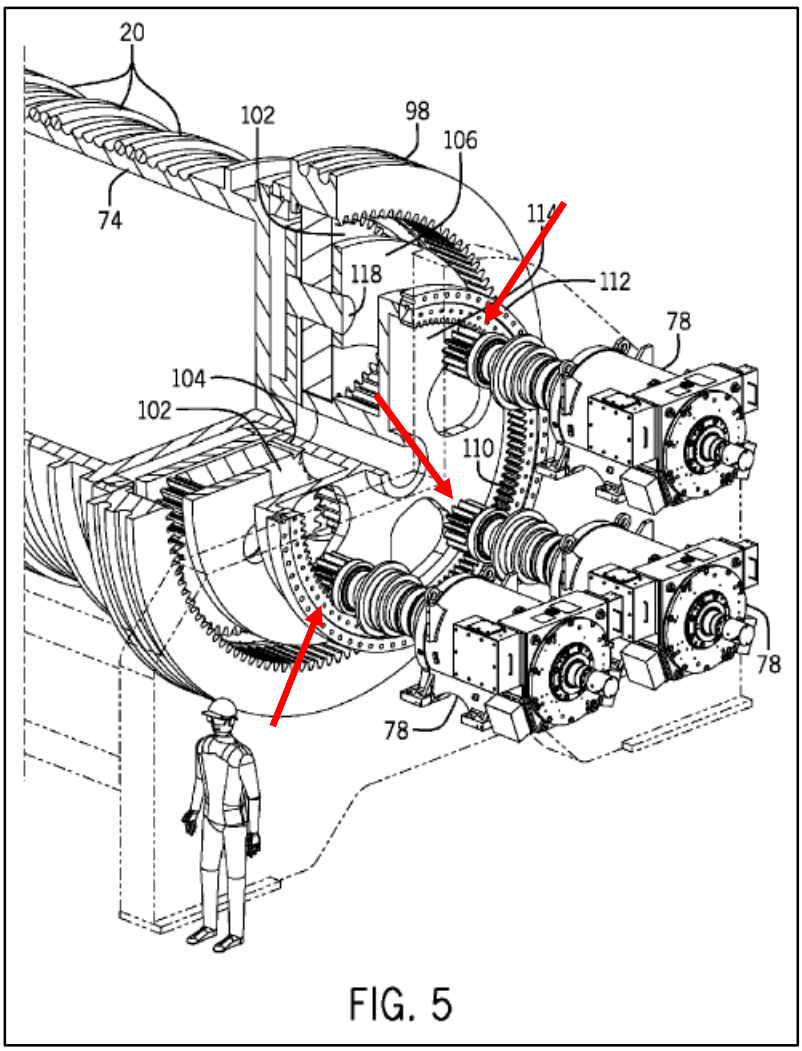

FIG. 5

EX1006, Fig. 5 (annotated); *see supra*, VIII.A.2.(e).

The *Buckley-Bergan* combination therefore renders this limitation obvious.

4. Claim 3

a) <u>The hydraulic fracturing system of claim 1, wherein the multi-plunger hydraulic fracturing pump has three plungers.</u>

The ’533 Patent admits that three- and five-plunger hydraulic fracturing pumps were known in the art. EX1001, 5:1-3. And as discussed above, a POSITA

would have understood that *Buckley*'s pump is a five-plunger pump, which has three plungers. *See supra*, VIII.A.2.(b). *Buckley* therefore discloses Claim 3.

5. Claim 4

a) The hydraulic fracturing system of claim 1, wherein the multi-plunger hydraulic fracturing pump has five plungers.

The '533 Patent admits that five-plunger hydraulic fracturing pumps were known in the art. EX1001, 5:1-3. And as discussed above, a POSITA would have understood that *Buckley*'s pump is a five-plunger pump. *See supra*, VIII.A.2.(b). *Buckley* therefore discloses Claim 4.

6. Claim 10

a) 10[p]: A hydraulic fracturing method comprising:

See supra, VIII.A.2.(b) (explaining how *Buckley* discloses a technique for hydraulic fracturing); EX1003, ¶¶204-205.

b) 10[a]: by operation of a multi-plunger hydraulic fracturing pump of a hydraulic fracturing system, pumping fluid to a wellbore associated with a subterranean formation, the multiplunger hydraulic fracturing pump comprising a pump crankshaft;

See supra, VIII.A.2.(b); EX1003, ¶207.

c) 10[b]: powering the multi-plunger hydraulic fracturing pump with a plurality of motors; and;

See supra, VIII.A.2.(c); EX1003, ¶208.

d) 10[c]: translating power from the plurality of motors to the multi-plunger hydraulic fracturing pump through a planetary gear train,

See supra, VIII.A.2.(d); EX1003, ¶209.

e) 10[d]: wherein translating power through the planetary gear train comprises translating power through: a plurality of input pinion gears that are driven by the plurality of motors; and

See supra, VIII.A.2.(e); EX1003, ¶210.

f) 10[e]: a final drive gear that drives the pump crankshaft, wherein the final drive gear is connected to the pump crankshaft by a plurality of arms extending from the final drive gear.

See supra, VIII.A.2.(f); EX1003, ¶211.

7. Claim 11

a) The hydraulic fracturing method of claim 10, wherein the plurality of motors comprises a plurality of electric motors, and each of the plurality of input pinion gears is driven by a respective one of the plurality of electric motors.

See supra, VIII.A.3; EX1003, ¶212.

8. Claim 12

a) The hydraulic fracturing method of claim 10, wherein the multi-plunger hydraulic fracturing pump has three plungers.

See supra, VIII.A.4; EX1003, ¶213.

9. Claim 13

a) The hydraulic fracturing method of claim 10, wherein the multi-plunger hydraulic fracturing pump has five plungers.

See supra, VIII.A.5; EX1003, ¶214.

B. Ground 1B: The Combination of Yi, Bergan, August, Joyner, and Morris Renders Obvious Claims 1, 3, 4, 10, 12, 13

1. Motivation to Combine

a) *Yi* with *Bergan* and *August*

A POSITA would have been motivated to combine *Bergan*'s planetary gear system, with appropriate changes to gear sizes that would have been obvious to a POSITA, with *Yi*'s pump system to couple *Yi*'s multiple motors with its pump crankshaft via *Bergan*'s planetary gear system, including the pinion gears taught by *Bergan*. EX1003, ¶226. *Yi* provides an express motivation to combine with *Bergan*'s planetary gear system. *Yi* teaches that it couples its motors to an input power gear via multiple output power gears, but otherwise does not provide detail regarding the particular gearing utilized to transmit rotation from the motors to the pump. *See* EX1010, [0044]. A POSITA would have been motivated to look for other references that disclose particular gearing configurations for, and additional details regarding, coupling multiple motors to a single load, such as *Bergan*, when implementing the pumping system disclosed by *Yi*. EX1003, ¶¶219-225.

Further, incorporating *Bergan's* planetary gear train and the use of pinions to connect the motors to the load is applying a known technique (planetary gear trains and motors with pinions) to improve similar devices (*Yi's* gearing system) in the same way. EX1003, ¶227; *KSR Int'l*, 550 U.S. at 417. The results of the combination would be predictable: transfer of rotational energy from *Yi*'s motors to *Yi's* pump

with straightforward, predictable changes in gear ratios and corresponding changes in speed and torque available. EX1003, ¶227. Further, *Bergan*'s planetary gear system and motors with pinions was known in one field of endeavor (oil and gas drilling) and would have prompted a POSITA to use it in either the same filed or a different one (oil and gas fracturing) based on design incentives (ability to connect multiple motors to a single load and the advantages of a planetary gear train) because the variations used for a pump (as in *Yi*) would have been predictable to one of ordinary skill in the art. *Id.*; *KSR Int'l*, 550 U.S. at 417. The results of the combination would be predictable: transfer of rotational energy from *Yi*'s motors to *Yi*'s pump with straightforward, predictable changes in gear ratios and corresponding changes in speed and torque available. EX1003, ¶227.

And for the same reasons discussed above in Ground 1A regarding the combination of *Buckley* And *Bergan* with *August*, a POSITA would have been motivated to combine *Yi* and *Bergan* with *August* and would have reasonably expected success in doing so (*i.e.*, because modifying *Bergan's* planetary gearing system to include *August*'s star arrangement is a simple substitution of elements according to known methods to yield predictable results, and such a substitution offers operational benefits to operating fracturing pumps due to a lower gear ratio). *See supra*, VIII.A.1.(a); EX1003, ¶¶228-231.

Accordingly, a POSITA would have been motivated to combine *Yi*, *Bergan*, and *August*, and would have had a reasonable expectation of success in doing so. EX1003, ¶231.

b) *Morris* and *Joyner*

See supra, VIII.A.1.(b); EX1003, ¶232.

c) The *Yi-Bergan-August* Combination with the *Morris-Joyner* Combination

For the same reasons discussed above in Ground 1A regarding the combination of the *Buckley-Bergan-August* combination with the *Morris-Joyner* combination, a POSITA would have been motivated to combine the *Yi-Bergan-August* combination with the *Morris-Joyner* combination and would have reasonably expected success in doing so (*i.e.*, because design incentives and market forces would have motivated the combination, and the combination involves applying a known technique to improve similar devices in the same way). *See supra*, VIII.A.1.(c); EX1003, ¶¶233-234.

2. Claim 1

a) 1[p]

Yi generally discloses a "fracturing pump transmission system and a fracturing truck," and explains that fracturing involves operating in "oil and gas wells" to "inject high-pressure, large-volume fracturing fluid into the formation, causing it to crack open and injecting proppants (such as fracturing sand) into the fractures to

enhance the permeability of the formation." EX1010, [0002]. A POSITA would have recognized that the "oil and gas wells" that are fractured are "subterranean formations," and that *Yi* discloses this limitation. EX1003, ¶236.

b) 1[a]

The '533 Patent admits in its Background section that it was well known to "transmit fluid media down the well bore" in hydraulic fracturing systems. EX1001, 1:43-44. Further, the '533 Patent admits that multi-plunger hydraulic fracturing pumps were known. *Id.*, 5:8-10.

Consistent with this admission in the background of the '533 Patent, *Yi* discloses a multi-plunger hydraulic pump that meets the elements of Limitation 1[a].

Yi discloses "a fracturing pump transmission system and a fracturing truck," and that the fracturing truck includes a "fracturing pump [that] is a crankshaft-type plunger pump." EX1010, [0002], [0010]. Further, *Yi* explains that hydraulic fracturing involves operating in "oil and gas wells" to "inject high-pressure, large-volume fracturing fluid into the formation, causing it to crack open and injecting proppants (such as fracturing sand) into the fractures to enhance the permeability of the formation." *Id.*, [0002]. Because *Yi* teaches pumping fluid into the formation, *Yi* teaches pumping fluid into the well and wellbore associated with the subterranean formation. EX1003, ¶239.

Further, a POSITA would have understood that *Yi*'s plunger pump is a "multi-plunger hydraulic pump." Although *Yi* does not specifically identify its pump as a "multi-plunger pump," a POSITA would have understood that *Yi*'s pump comprises five ("multiple") plungers, which are annotated with red arrows in the below copies *Yi*'s pump:

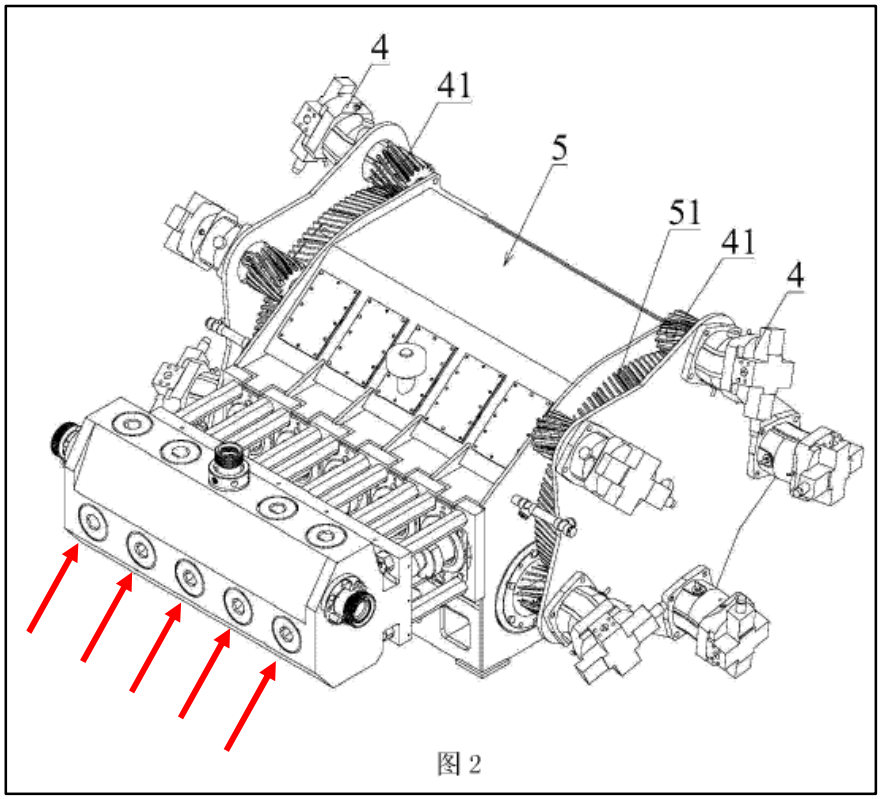

EX1009, Fig. 2; EX1003, ¶240.

Further, a POSITA would have understood that *Yi*'s pump comprises a "pump crankshaft." *Yi* discloses that its fracturing pump "is a ***crankshaft***-type plunger pump." EX1010, [0010] (emphasis added). And although not expressly depicted

by *Yi*, a POSITA would have understood that *Yi*'s pump comprises a crankshaft, which is annotated with a red line in the below copy of the pumps disclosed by *Yi*:

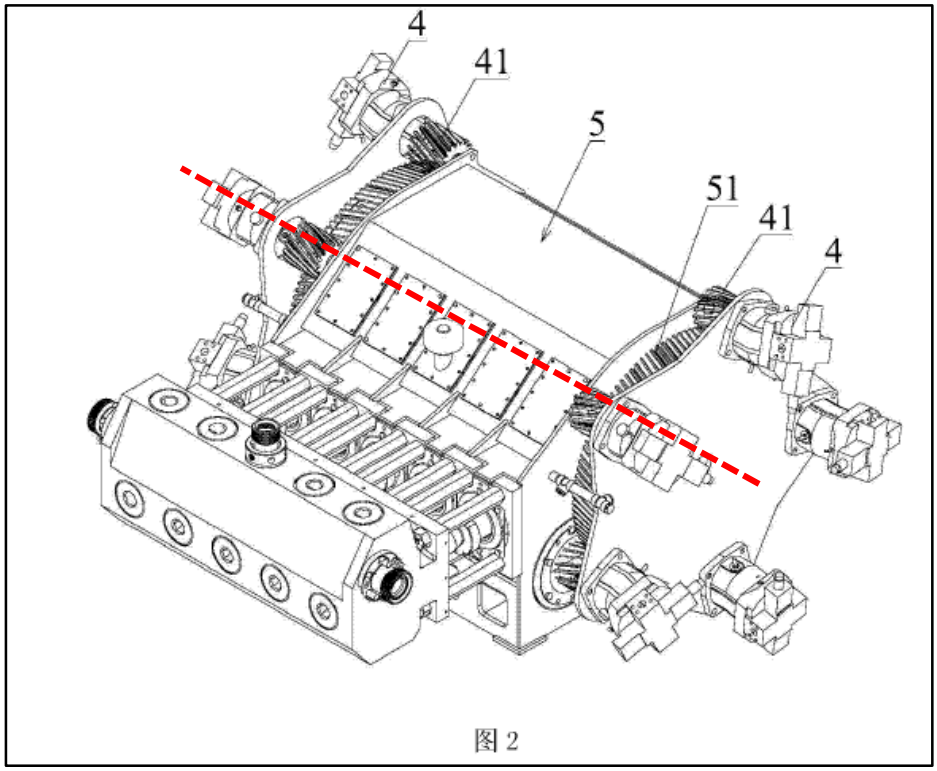

EX1009, Fig. 2 (annotated); EX1003, ¶241.

This understanding of *Yi* is consistent with the examiner's rejection of Limitation 1[a] during prosecution, where the examiner found that it is "inherent that crankshaft runs down axis of power end" of a pump as annotated, which was not contested by the applicant. EX1002, 140-145, 158-159.

c) <u>1[b]</u>

Yi teaches "the fracturing pump transmission system includes … multiple motors," and that "all the multiple motors are used to drive the fracturing pump."

EX1010, Abstract. Figure 2 of *Yi*, annotated below, shows multiple of motors (labeled as items 4 below):

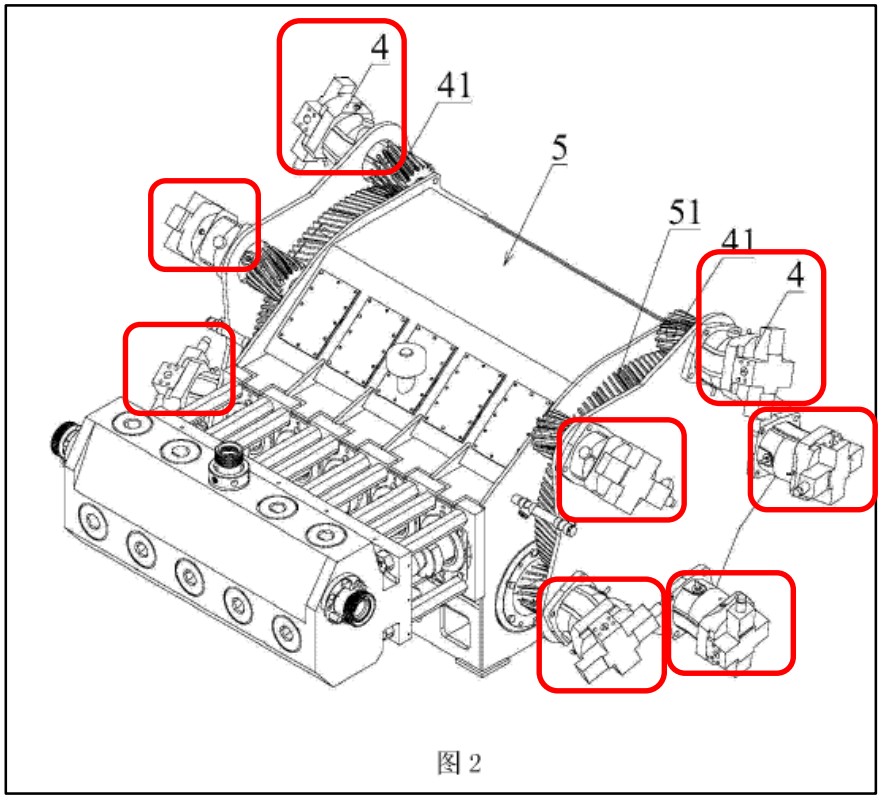

EX1009, Fig. 2 (annotated).

Yi therefore discloses this limitation.

d) 1[c]

Under the *Yi-Bergan* combination, it would have been obvious to a POSITA that *Bergan*'s planetary gear system would couple *Yi*'s multiple motors to *Yi*'s pump to transfer power from the motors to pump crankshaft for the same reasons discussed in Ground 1A regarding Limitation 1[c]. *See supra*, VIII.A.2.(d); EX1003, ¶¶247-250.

e) 1[d]

Under the *Yi-Bergan* combination, it would have been obvious to a POSITA that *Bergan*'s input pinion gears would be connected to *Yi*'s multiple motors for the same reasons discussed above in Ground 1A regarding Limitation 1[d]. *See supra*, VIII.A.2.(e); EX1003, ¶¶251-255.

f) 1[e]

Under the *Yi-Bergan-August-Morris-Joyner* combination, it would have been obvious that *August*'s ring gear ("final drive gear") would be connected to *Yi*'s pump crankshaft via the *Morris-Joyner* universal joint-based coupling ("by a plurality of arms extending from the final drive gear") for the same reasons discussed above in Ground 1A regarding Limitation 1[e]. *See supra*, VIII.A.2.(f); EX1003, ¶¶258-263.

3. Claim 3

The '533 Patent admits that three- and five-plunger hydraulic fracturing pumps that meet the limitations of Claim 3 were known in the art. EX1001, 5:1-3. And as discussed above, a POSITA would have understood that *Yi*'s pump is a five-plunger pump, which has three plungers. *See supra*, VIII.B.2.(b). *Yi* therefore discloses Claim 3.

4. Claim 4

The '533 Patent admits that five-plunger hydraulic fracturing pumps were known in the art. EX1001, 5:1-3. And as discussed above with reference to Limitation 1[a], a POSITA would have understood that *Yi*'s pump is a five-plunger pump. *See supra*, VIII.B.2.(b). *Yi* therefore discloses Claim 4.

5. Claim 10

a) 10[p]

See supra VIII.B.2.(b) (explaining how *Yi* discloses a technique for pumping into a wellbore associated with a subterranean formation using a multi-plunger pump); EX1003, ¶¶273-274.

b) 10[a]

See supra, VIII.B.2.(b); EX1003, ¶276.

c) 10[b]

See supra, VIII.B.2.(c); EX1003, ¶277.

d) 10[c]

See supra, VIII.B.2.(d); EX1003, ¶278.

e) 10[d]:

See supra, VIII.B.2.(e); EX1003, ¶279.

f) 10[e]:

See supra, VIII.B.2.(f); EX1003, ¶280.

6. Claim 12

See supra, VIII.B.2; EX1003, ¶282.

7. Claim 13

See supra, VIII.B.3; EX1003, ¶283.

C. Ground 2A: The Combination of Buckley, Bergan, August, Joyner, Morris, and Karassik Renders Obvious Claims 5, 6, 14, and 15

1. Motivation to Combine

a) *Buckley* with *Bergan*, *August*, *Joyner*, and *Morris*

See supra, VIII.A.1.

b) *Buckley* with *Karassik*

Buckley discloses a five-plunger fracturing pump. *See supra*, VIII.A.2.(b). *Karassik* is a publication that describes fundamental pump theory and operations, including the use of one-, two-, three-, four-, five- six-, seven-, and nine-plunger pumps. EX1017, 3.11 (Table 7). A POSITA would have recognized that modifying *Buckley* to use seven plungers or nine plungers, as taught by *Karassik*, rather than five plungers would involve simple substitutions of one known element (a seven- or nine-plunger pump, as taught by *Karassik*) for another (*Buckley*'s five-plunger pump) to obtain the predictable result of performing fracturing operations with a seven- or nine-plunger pump. EX1003, ¶289; *KSR Int'l*, 550 U.S. at 416-17. Further, a POSITA would have understood that seven- and nine- plunger pumps experience less noise, vibration, and associated component damage than pumps with fewer plungers (as taught by *Karassik*) and would have been motivated to substitute *Buckley*'s five-plunger pump with *Karassik*'s seven- or nine-plunger pumps to take advantage of those benefits. EX1003, ¶288; EX1017, 3.10. Accordingly, a

POSITA would have been motivated to combine *Buckley* with *Karassik* and would have a reasonable expectation of success when doing so. EX1003, ¶289.

2. Claim 5

a) The hydraulic fracturing system of claim 1, wherein the multi-plunger hydraulic fracturing pump has seven plungers.

The '533 Patent admits that that multi-plunger hydraulic fracturing pumps were known in the art. EX1001, 5:1-3. And a POSITA would have understood that *Buckley*'s pump is a five-plunger pump. *See supra*, VIII.A.2.(b).

In addition to five-plunger pumps, *Karassik* discloses seven-plunger pumps. *See, e.g.*, EX1017, 3.11 (Table 7). A POSITA would have understood that *Buckley*'s five-plunger pump would be substituted for a seven-plunger pump, as these were well-known alternatives for each other, as indicated by *Karassik*. EX1003, ¶292. Accordingly, Claim 5 is rendered obvious by the *Buckley-Karassik* combination in view of *Bergan, August*, *Morris*, and *Joyner*.

3. Claim 6

a) The hydraulic fracturing system of claim 1, wherein the multi-plunger hydraulic fracturing pump has nine plungers.

The '533 Patent admits that that multi-plunger hydraulic fracturing pumps were known in the art. EX1001, 5:1-3. And a POSITA would have understood that *Buckley*'s pump is a five-plunger pump. *See supra*, VIII.A.2.(b).

In addition to five-plunger pumps, *Karassik* discloses nine-plunger pumps. *See, e.g.*, EX1017, 3.11 (Table 7). A POSITA would have understood that *Buckley*'s

five-plunger pump would be substituted for a nine-plunger pump, as these were well-known alternatives for each other, as indicated by *Karassik*. EX1003, ¶295. Accordingly, Claim 6 is rendered obvious by the *Buckley-Karassik c*ombination in view of *Bergan, August*, *Morris*, and *Joyner*.

4. Claim 14

a) The hydraulic fracturing method of claim 10, wherein the multi-plunger hydraulic fracturing pump has seven plungers.

See supra, VIII.C.2; EX1003, ¶296.

5. Claim 15

a) The hydraulic fracturing method of claim 10, wherein the multi-plunger hydraulic fracturing pump has nine plungers.

See supra, VIII.C.3; EX1003, ¶297.

D. Ground 2B: The Combination of Yi, Bergan, August, Joyner, Morris, and *Karassik Renders Obvious Claims 5, 6, 14, and 15*

1. Motivation to Combine

a) *Yi* with *Bergan*, *August*, *Joyner*, and *Morris*

See supra, VIII.B.1; EX1003, ¶299.

b) *Yi* with *Karassik*

For the same reasons discussed above in Ground 2A regarding the combination of *Buckley* with *Karassik*, a POSITA would have been motivated to combine *Yi* with *Karassik* and would have reasonably expected success in doing so (*i.e.*, because combining *Karassik*'s seven- and nine-plunger pumps to the *Yi* pumping system is a simple substitution of elements to known methods to yield

predictable results, and such a substitution offers operational benefits from reduced noise and vibrations). *See supra*, VIII.C.1.(b); EX1003, ¶¶300-303.

2. Claim 5

For the same reasons discussed above in Ground 2A regarding Claim 5, a POSITA would have understood that *Yi*'s five-plunger pump would be substituted for a seven-plunger pump, as these were well-known alternatives for each other, as indicated by *Karassik*. *See supra*, VIII.C.2, VIII.D.1(b); EX1003, ¶¶304-306. Accordingly, Claim 5 is rendered obvious by the *Yi-Karassik* combination in view of *Bergan*, *August*, *Morris*, and *Joyner*.

3. Claim 6

For the same reasons discussed above in Ground 2A regarding Claim 6, a POSITA would have understood that *Yi*'s five-plunger pump would be substituted for a nine-plunger pump, as these were well-known alternatives for each other, as indicated by *Karassik*. *See supra*, VIII.C.3, VIII.D.1(b); EX1003, ¶¶307-309. Accordingly, Claim 6 is rendered obvious by the *Yi-Karassik* combination in view of *Bergan*, *August*, *Morris*, and *Joyner*.

4. Claim 14

See supra, VIII.D.2; EX1003, ¶310.

5. Claim 15

See supra, VIII.D.3; EX1003, ¶311.

E. Ground 3A: The Combination of Buckley, Bergan, August, Joyner, Morris, and Payne Renders Obvious Claims 7 and 16

1. Motivation to Combine

a) *Buckley* with *Bergan*, *August*, *Joyner*, and *Morris*

See supra, VIII.A.1; EX1003, ¶313.

b) *Buckley* with *Payne*

A POSITA would have been motivated to modify the *Buckley*'s pumping system to include the VFD taught by *Payne* for several reasons. First, *Buckley* provides an express motivation for this combination. *Buckley* discloses that its system "may permit the motors [] to run at various speeds or power outputs." EX1004, [0058]; EX1005, 6. A POSITA would have been motivated to look for other references that disclose systems and techniques for controlling electric motors to operate at different speeds and power, such as *Payne*, when implementing the pumping system disclosed by *Buckley*. EX1003, ¶¶315-316.

Second, design incentives and market forces would have motivated a POSITA to implement AC motors and VFDs for controlling those motors, as taught in *Payne*, with the pumping system taught by *Buckley*. It was well-known in the art that AC motors offered a variety of advantages, including improved reliability, lower cost of operation, and being smaller, lighter, and more commonly available than equivalent direct current (DC) motors. *See* EX1003, ¶¶317-318 (citing EX1008, [0010]-[0011]). A POSITA would have been motivated to apply *Payne*'s use of AC motors,

along with one or more VFDs to control the motors' speed, to take advantage of the reliability, lower maintenance and cost savings of such a system over another type of system, such as one that uses DC motors. EX1003, ¶318.

A POSITA would have had a reasonable expectation of success in applying the teachings of *Payne* regarding using an AC motor and controlling speed with a variable frequency drive. Both AC motors and VFDs were well known, established technologies that were subject to industry standards before the '533 Patent's priority date. EX1003, ¶319. Further, adding *Payne*'s VFD to supplement *Buckley*'s teachings regarding electric motors is simply combining prior art elements (AC motors and VFDs, as taught by *Payne*, and *Buckley*'s multi-motor pump system) according to known methods (controlling speed/torque of an AC motor with a VFD) to yield predictable results (controlling the plurality of motors in *Buckley*). *Id*. Further still, such a combination is using a known technique (AC motors and VFDs, as taught by *Payne*) to improve similar devices (the electric motor driven pump of *Buckley*, which is similar to *Payne*'s electric motor driven pump) in the same way (using a VFD to control speed/torque of the motors in the *Buckley* system). *Id*.

2. Claim 7

a) <u>The hydraulic fracturing system of claim 1, further comprising a variable frequency drive (VFD) associated with the plurality of motors and configured to control a pump rotational speed of the multi-plunger hydraulic fracturing pump.</u>

Payne discloses a "[a] system for stimulating oil or gas production from a wellbore [that] includes a hydraulic fracturing pump unit having one or more hydraulic pumps driven by one or more electrical fracturing motors, [and] a variable frequency drive controlling the electrical fracturing motors." EX1008, Abstract. As an example of operation, *Payne* teaches the use of a VFD, which, in response to receiving a "speed set point," "provides ac current which turns the mechanically coupled motor and fracturing pump." *Id*., [0039]. A POSITA would have understood that this teaches that the VFD is "associated with the plurality of motors and configured to control a pump rotational speed of the multi-plunger hydraulic fracturing pump," consistent with the well-known functionality of VFDs. EX1003, ¶322.

Accordingly, the *Buckley*-Payne combination renders obvious Claim 7 in view of *Bergan*, *August*, *Morris*, and *Joyner*.

3. Claim 16

a) <u>The hydraulic fracturing method of claim 10, comprising, by operation of a variable frequency drive (VFD), controlling a pump rotational speed of the multi-plunger hydraulic fracturing pump.</u>

See supra, VIII.E.2; EX1003, ¶324.

F. Ground 3B: The Combination of Yi, Bergan, August, Joyner, Morris, and Payne Renders Obvious Claims 2, 7, 11 and 16

1. Motivation to Combine

a) <u>*Yi* with *Bergan*, *August*, *Joyner*, and *Morris*</u>

See supra, VIII.B.1; EX1003, ¶326.

b) The *Yi-Bergan* Combination with *Payne*

A POSITA would have been motivated to modify the *Yi-Bergan* combination's pumping system to use electric, rather than hydraulic, motors to power its pump. EX1003, ¶327. *Yi* discloses a "fracturing pump transmission system" wherein "multiple motors are used to drive the fracturing pump." EX1010, Abstract. And although *Yi* discloses that its "plurality of motors" are hydraulic motors, *Yi* teaches that "there are various ways for multiple motors 4 to drive the fracturing pump, as long as the motor 4 can drive the fracturing pump 5 to rotate, which are not limited in the embodiments of the invention," which suggests to a POSITA that any type of motor, including electric motors, could be used to power *Yi*'s pump. EX1010, [0044]; EX1003, ¶328. Similarly, *Bergan* teaches the use of a plurality of electric motors that operate together to drive a load. EX1006, [0030] ("The motors 78 can include electric motors, for example."). Further, *Payne* describes "[a] system for stimulating oil or gas production from a well bore includes a hydraulic fracturing pump unit having one or more hydraulic fracturing pumps driven by one or more electrical fracturing motors." EX1008, Abstract. *Payne* further describes "a variable frequency drive controlling the electrical fracturing motors." *Id*.

A POSITA would have been motivated to modify the *Yi-Bergan* combination's pumping system to use electric, rather hydraulic, motors to power its pump (as taught by *Bergan* and *Payne* and suggested by *Yi*) and *Payne*'s VFDs for controlling the electric motors, for several reasons. EX1003, ¶327. It was known in the art that AC electric motors, like those described in *Payne*, offer particular advantages over mechanical motors, such as the hydraulic motors described by *Yi*, that are desirable in fracturing operations, namely, being lighter, easier to transport, and obviating the need to supply fuel when compared to mechanical systems (*e.g.*, diesel-driven motors). EX1008, [0008]; EX1003, ¶¶329-330. Further, AC electric motors, coupled with VFDs, may be controlled in a more precise manner than DC electric motors, and they are generally more commonly available and less expensive than DC electric motors. EX1008, [0009]-[0011]. Accordingly, design incentives and market forces would have motivated a POSITA to modify the *Yi-Bergan* combination's pumping system to include AC motors and accompanying VFD (as taught by *Payne*) rather than hydraulic motors (as taught by *Yi*). EX1003, ¶¶329-332.

Further, modifying the *Yi-Bergan* combination's pumping system to use electric, rather than hydraulic, motors to power its fracturing pump requires a simple substitution of one known element (AC electric motors and accompanying VFD, as taught *Payne*) for another (hydraulic motors, as taught by *Yi*) to obtain the

predictable result of driving *Yi*'s fracturing pump with the electric motors. EX1003, ¶333; *KSR Int'l*, 550 U.S. at 416. Indeed, *Payne* discloses doing just that. *See* EX1008.

2. Claim 2

Yi teaches that "there are various ways for multiple motors 4 to drive the fracturing pump 5, as long as the motors 4 can drive the fracturing pump 5 to rotate, which are not limited in the embodiments of the invention." *Id*., [0044]. A POSITA would have understood that this suggests the use of any type of motor for powering the fracking pump, including electric motors which were well-known to have such an application. EX1003, ¶334 (citing EX1013, 47). In the alternative, a POSITA would have understood that the *Yi-Bergan-Payne* combination discloses using electric motors to power *Yi*'s fracturing pump, as discussed above. *See supra*, VIII.F.1.(b).

Further, *Bergan* discloses that each motor is connected to the planetary gear system via a respective pinion, as depicted in Figure 5 of *Bergan*:

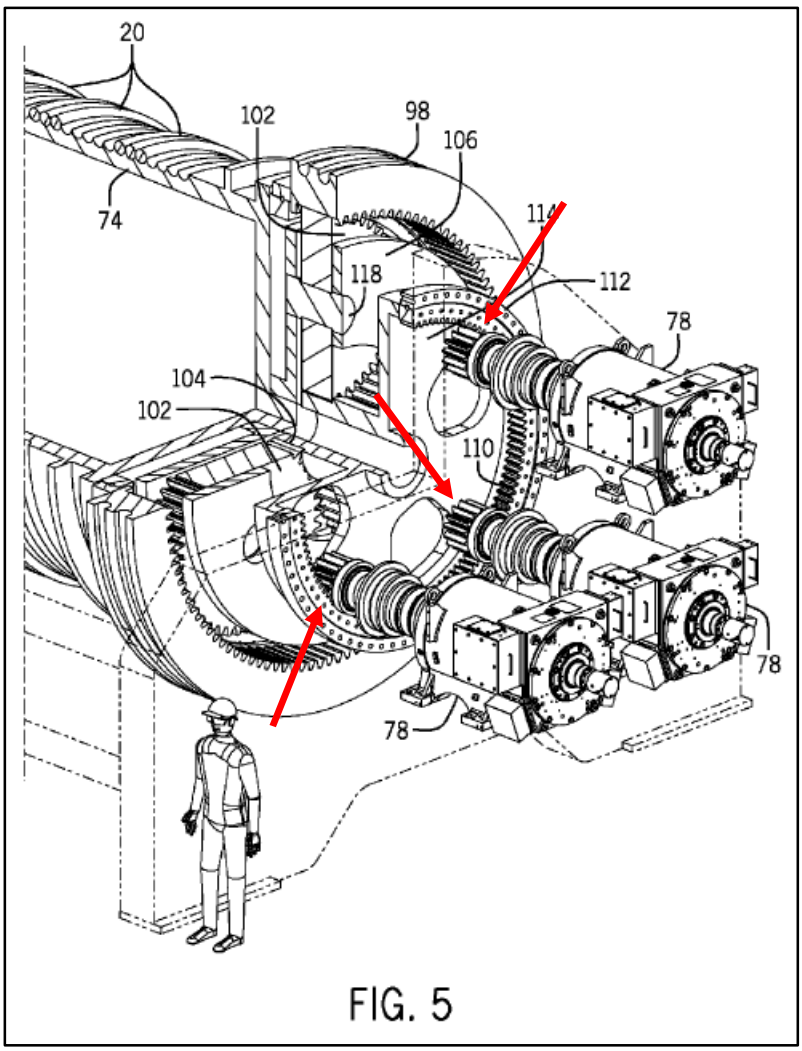

FIG. 5

EX1006, Fig. 5 (annotated); *see supra*, VIII.B.2.(e).

Accordingly, Claim 2 is rendered obvious by *Yi* and, in the alternative, the *Yi-Bergan-Payne* combination in view of *August*, *Morris*, and *Joyner*. EX1003, ¶334.

3. Claim 7

It would have been obvious that *Payne*'s VFD would control the speed of the electric motors of the *Yi-Bergan-Payne* combination for the same reasons discussed above in Ground 3A regarding Claim 7. *See supra*, VIII.E.2; EX1003, ¶336.

4. Claim 11

See supra, VIII.F.2; EX1003, ¶338.

5. Claim 16

See supra, VIII.F.3; EX1003, ¶339.

G. Ground 4A: The Combination of Buckley, Bergan, August, Joyner, Morris, and Rosman Renders Obvious Claims 8, 9, 17, 18, and 22

1. Motivation to Combine

a) *Buckley* with *Bergan*, *August*, *Joyner*, and *Morris*

See supra, VIII.A.1; EX1003, ¶341.

b) *Bergan* with *Rosman*

Bergan discloses a planetary gear system wherein input pinion gears (annotated with red arrows below) mesh with gear 110, as depicted in Figure 5:

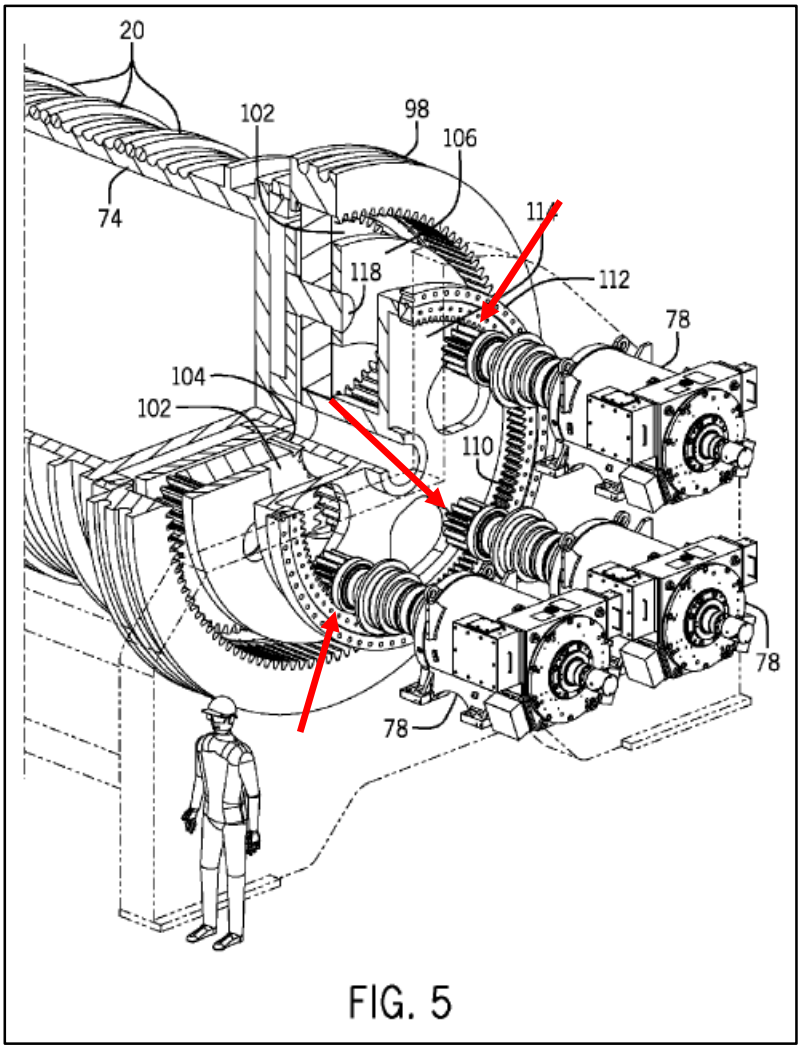

FIG. 5

EX1006, Fig. 5 (annotated). Figure 1 of *Rosman* depicts a similar configuration, wherein input pinion gears mesh with internal teeth of another gear to couple multiple motors to a load:

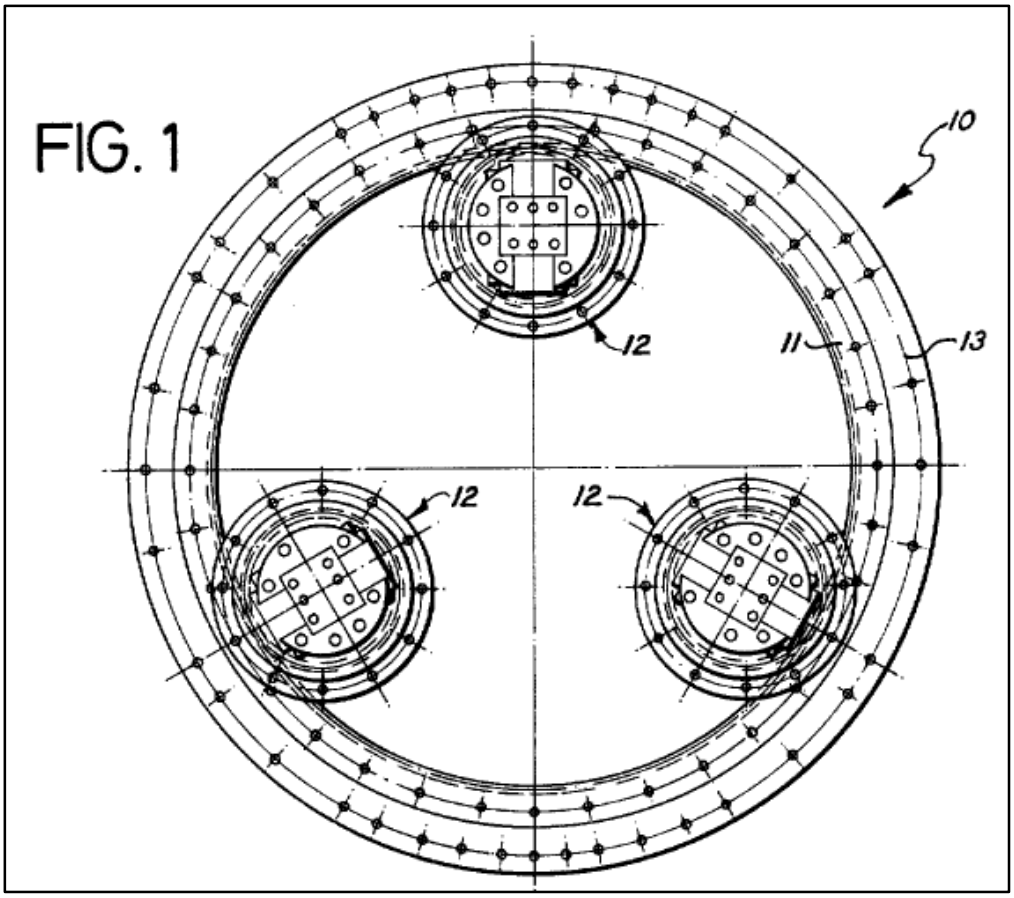

EX1007, Fig. 1, 4:4-6.

Rosman also discloses a gearing configuration wherein input pinion gears mesh with external teeth of another gear to couple multiple motors to a load, as depicted in Figure 2 below:

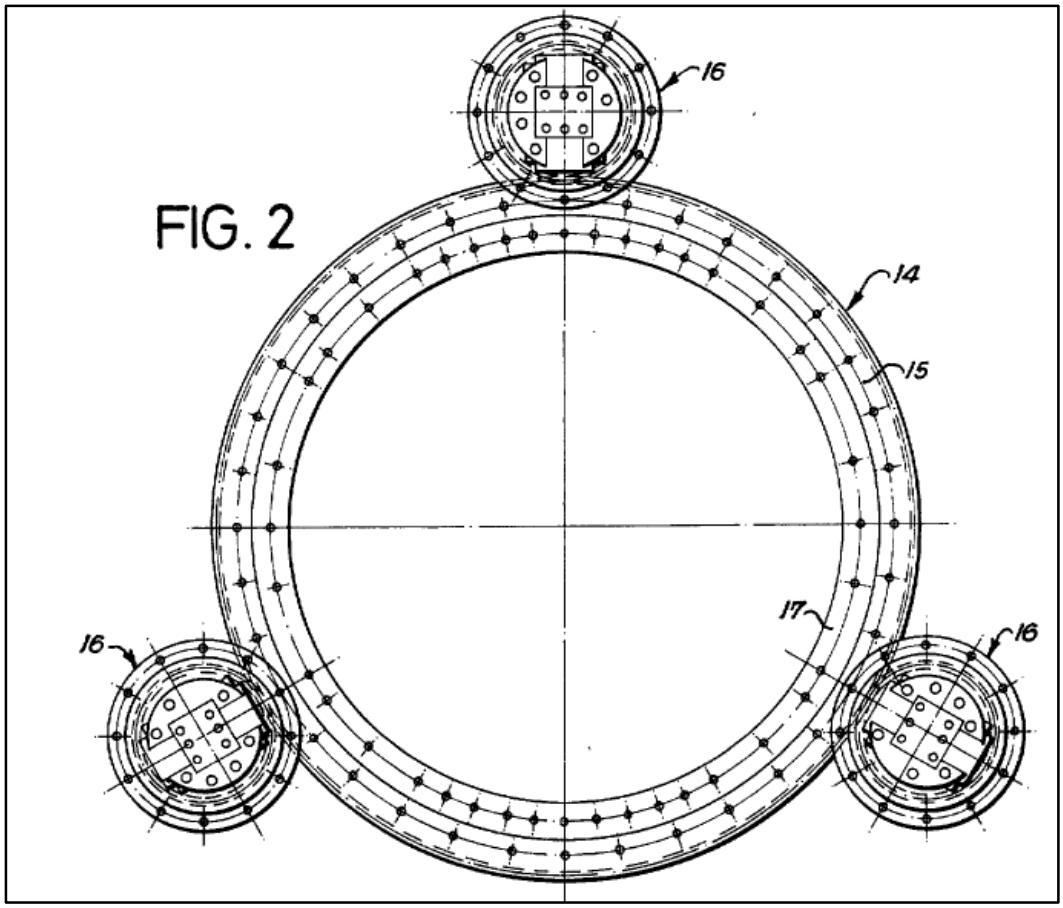

EX1007, Fig. 2, 4:18-34 (ring member 15 comprises "gear teeth disposed along the outer circumferential surface of ring member 15").

A POSITA would have motivated to combine *Rosman*'s ring member 15 with *Bergan*'s planetary gearing configuration such that *Bergan*'s input pinions are coupled to *Rosman*'s ring member 15 with external gear teeth. EX1003, ¶345. As discussed above, *Rosman* discloses ring members with both internal and external teeth, and a POSITA would have understood that these configurations were equivalent and could be implemented at the designer's discretion. *Id*. Such a modification would involve a simple substitution of one known element (*Rosman*'s

ring member 15) for another (*Bergan*'s gear 110) to obtain the predictable result of coupling *Bergan*'s input pinions to *Bergan*'s planetary gear system. *Id*.; *KSR Int'l*, 550 U.S. at 416. Accordingly, a POSITA would have been motivated to combine *Bergan* and *Rosman* and would have had a reasonable expectation of success in doing so. EX1003, ¶345.

2. Claim 8

a) The hydraulic fracturing system of claim 1, wherein the planetary gear train comprises a main gear that contacts each of the plurality of input pinion gears, wherein the main gear comprises external gear teeth that mate with external gear teeth of the plurality of input pinion gears.

Bergan discloses a planetary gear system wherein input pinion gears (annotated with red arrows below) mesh with gear 110, as depicted in Figure 5:

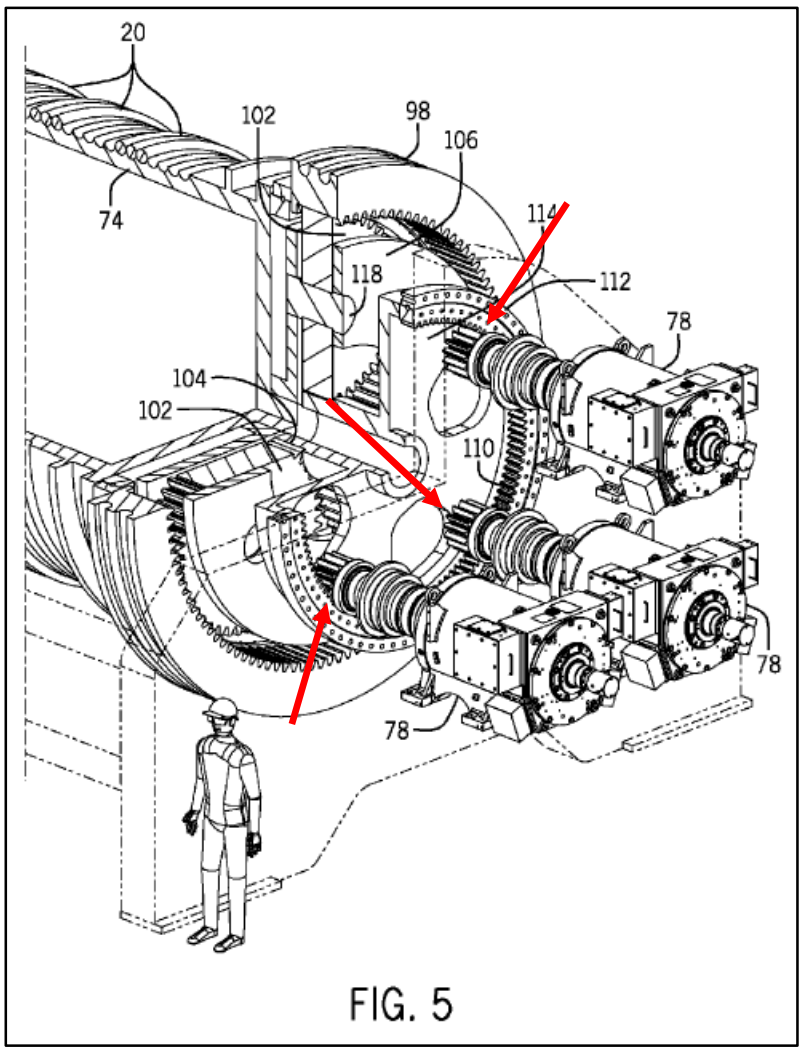

FIG. 5

EX1006, Fig. 5 (annotated); *see supra*, VIII.A.2.(e). As depicted, however, gear 110 comprises internal gear teeth that mesh with the external gear teeth of the pinion gears. EX1003, ¶347.

Rosman discloses a gearing configuration wherein input pinion gears mesh with external teeth of another gear to couple multiple motors to a load, as depicted in Figure 2 below:

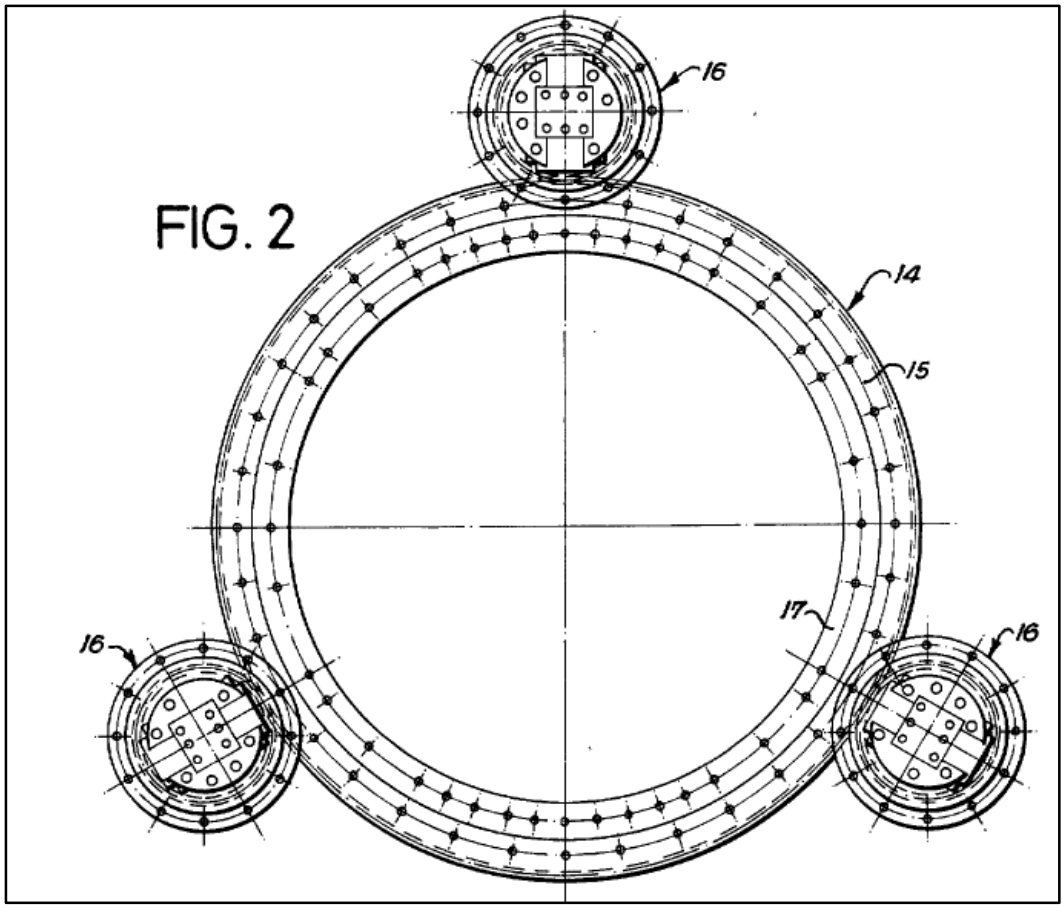

EX1007, Fig. 2. *Rosman* explains that "outer annular member 15 carr[ies] first engagement means," which are "gear teeth disposed along the entire outer circumferential surface of ring member 15" that couple with gear teeth of pinion gears coupled to motors 16. EX1007, 4:18-34.

As discussed above, combining this gearing configuration with *Bergan*'s planetary gearing system would involve a simple substitution of *Rosman*'s ring member 15 for *Bergan*'s gear 110, such that *Bergan*'s input pinion gears couple with the external teeth of ring member 15 and otherwise drive *Bergan*'s planetary gearing system as taught by *Bergan*. *See supra*, VIII.G.1.(b); EX1003, ¶350.

Accordingly, the *Bergan-Rosman* combination in view of *Buckley*, *August*, *Morris*, and *Joyner* renders Claim 8 obvious.

3. Claim 9

a) 9[a]: The hydraulic fracturing system of claim 8, wherein the planetary gear train comprises: a sun gear connected to the main gear by a shaft extending from the main gear; and

Bergan discloses that its "gear 110 is coupled to a sun wheel 114 having the sun gear 104 such that the motors 78 rotate the sun gear 104 via the wheel 114 and the gear 110." EX1006, [0032]. Figure 5 of *Bergan*, annotated below, shows the gear 110 (annotated in red) and sun gear 104 (annotated in green) via a shaft (not labeled, annotated in blue) extending from the sun wheel 114 (which is coupled to gear 110, annotated in magenta):

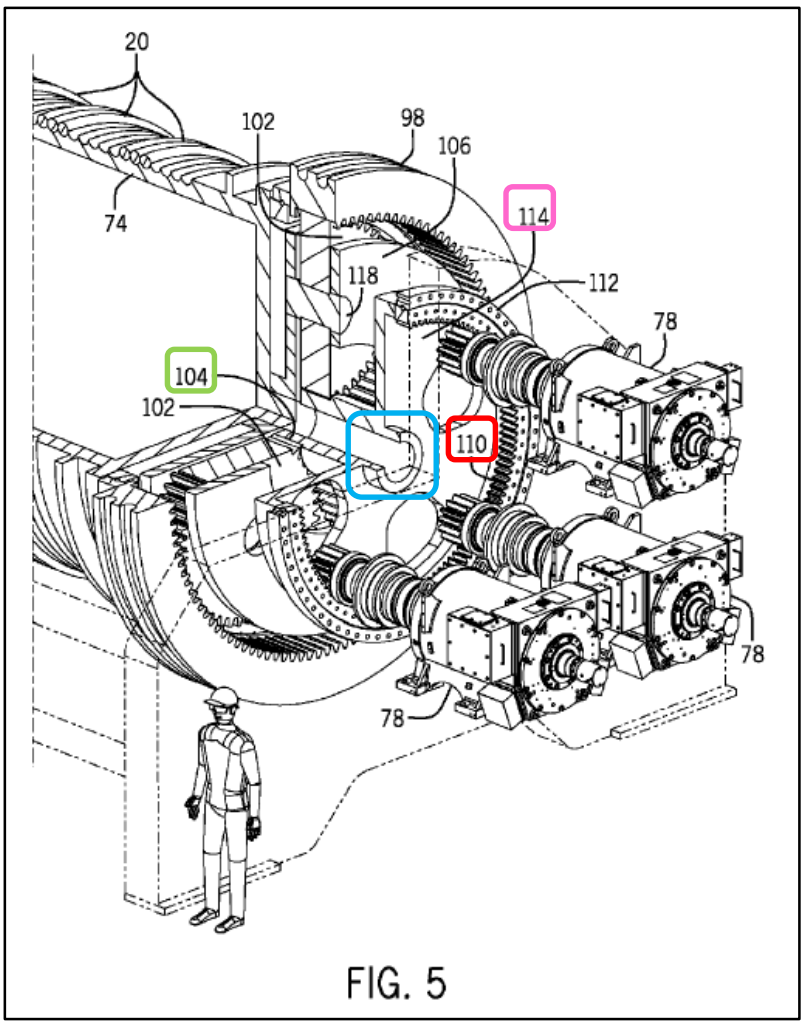

FIG. 5

EX1006, Fig. 5 (annotated). Similarly, Figure 6 depicts the shaft connecting these components:

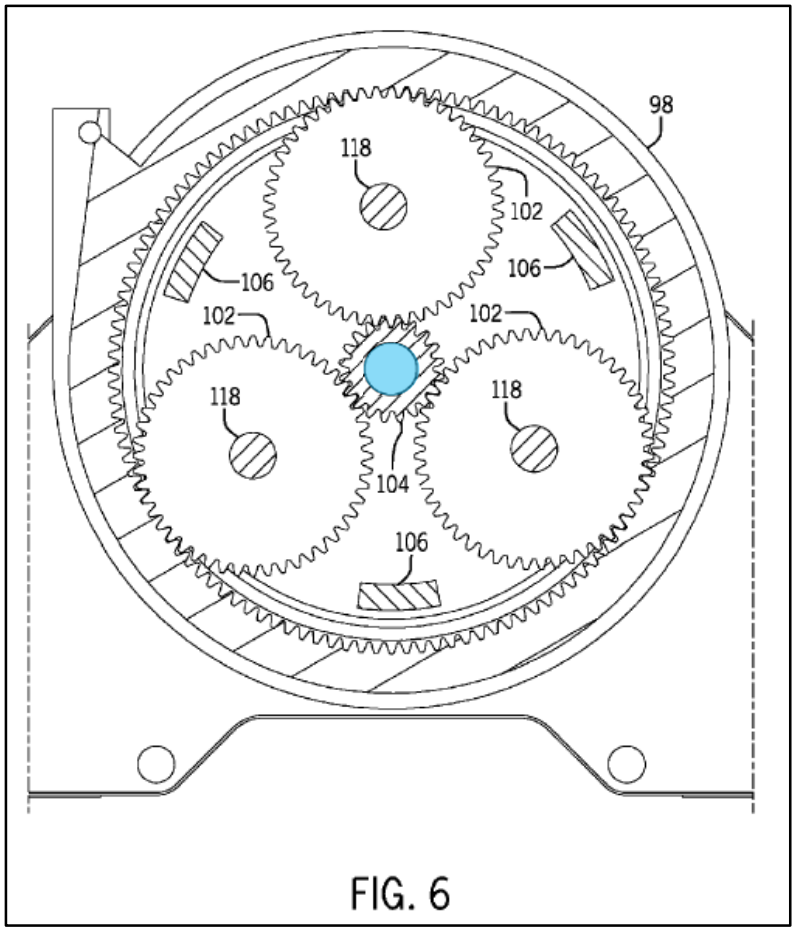

EX1006, Fig. 6 (annotated); EX1003, ¶354.

When *Bergan*'s gear 110 is substituted with *Rosman*'s ring member 15, as discussed above with refence to Claim 8, a POSITA would have understood that ring member 15 (the "main gear") would be connected to sun gear 104 via the shaft to sun wheel 114 with which ring member 15 is coupled. EX1003, ¶355. Accordingly, Limitation 9[a] is rendered obvious by the *Bergan-Rosman* combination in view of *Buckley*, *August*, *Morris*, and *Joyner*.

b) <u>9[b]: a plurality of planetary gears that each contact the sun gear and the final drive gear, wherein each of the plurality of planetary gears comprises external gear teeth that mate with</u>

external gear teeth of the sun gear and with internal gear teeth of the final drive gear.

Bergan discloses a plurality of planetary gears 102 that comprise external gear teeth that mate with external gear teeth of sun gear 104, as depicted by Figure 6 of *Bergan*:

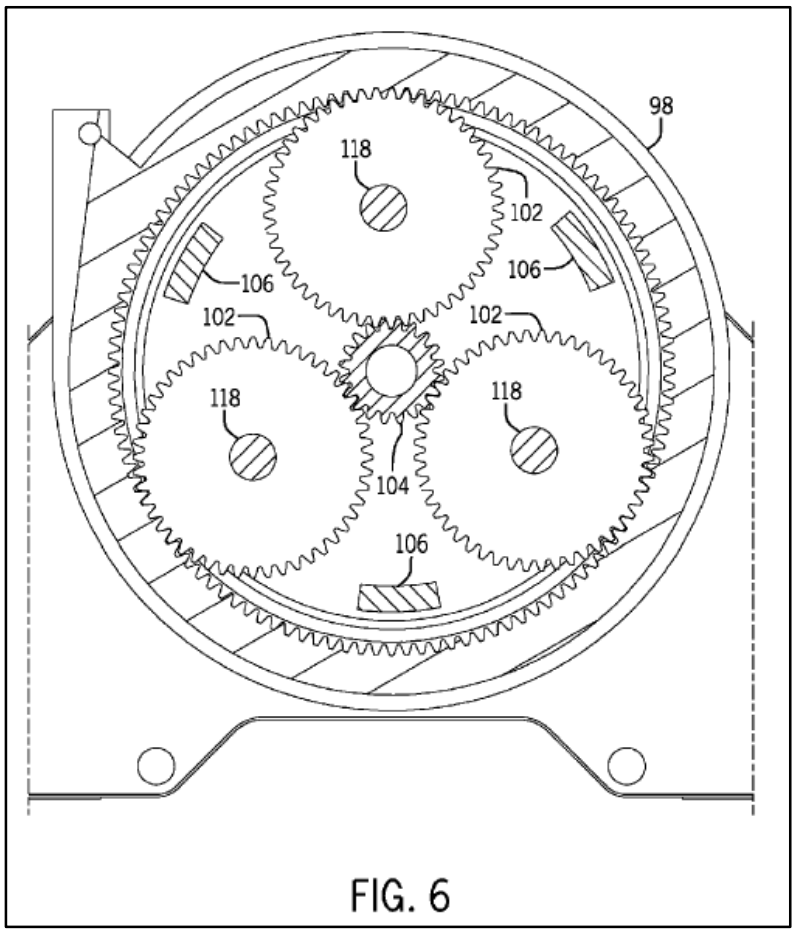

EX1006, Fig. 6; EX1003, ¶356.

Further, the *Buckley-Bergan-August* combination teaches that *Bergan*'s planetary gears 102 are coupled to *August*'s ring gear, which produces the output rotation for driving *Buckley*'s pump crankshaft. *See supra*, VIII.A.2.(f). Figure B-

1 of *August*, annotated below, shows the points where the internal teeth of *August*'s ring gear ("final drive gear") would mesh with the external teeth of *Bergan*'s planetary gears 102:

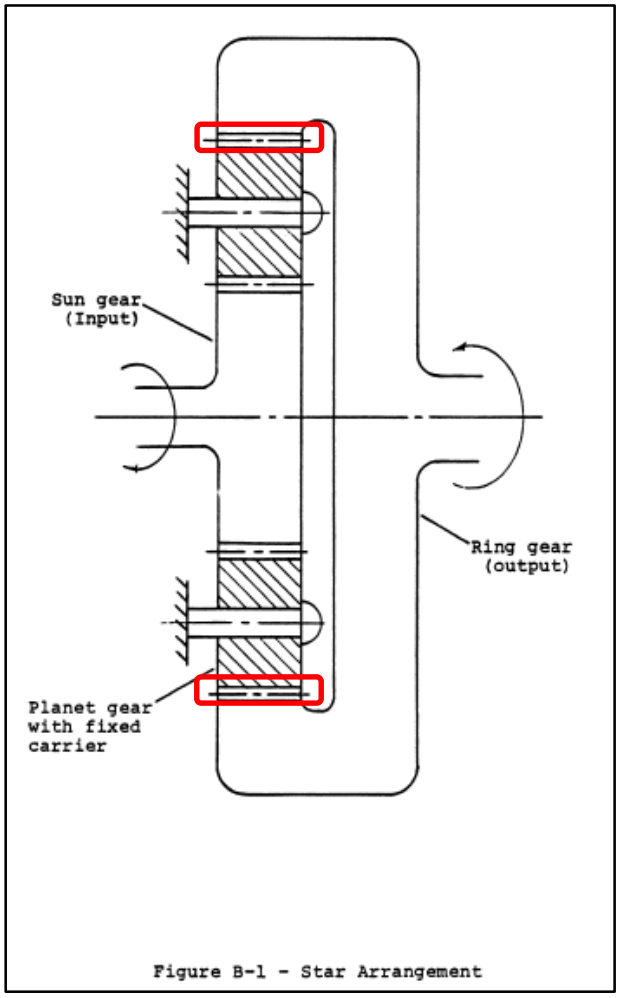

EX1014, 149 (annotated); EX1003, ¶357.

Accordingly, Limitation 9[a] is rendered obvious by the *Buckley-Bergan-August* combination in view of *Morris*, *Joyner*, and *Rosman*.

4. Claim 17

a) <u>The hydraulic fracturing method of claim 10, wherein translating power through the planetary gear train comprises</u>

translating power through a main gear that contacts each of the plurality of input pinion gears, wherein the main gear comprises external gear teeth that mate with external gear teeth of the plurality of input pinion gears.

See supra, VIII.A.6.(e), VIII.G.2; EX1003, ¶359.

5. Claim 18

a) 18[a]: The hydraulic fracturing method of claim 17, wherein translating power through the planetary gear train comprises translating power through: a sun gear connected to the main gear by a shaft extending from the main gear; and

See supra, VIII.G.3.(a); EX1003, ¶361.

b) 18[b]: a plurality of planetary gears that contact the sun gear and the final drive gear, wherein each of the plurality of planetary gears comprises external gear teeth that mate with external gear teeth of the sun gear and with internal gear teeth of the final drive gear.

See supra, VIII.G.3.(b); EX1003, ¶362.

6. Claim 22

a) 22[p]: A hydraulic fracturing system for fracturing a subterranean formation, the hydraulic fracturing system comprising:

See supra, VIII.A.2.(a); EX1003, ¶364.

b) 22[a]: a plurality of electric motors;

See supra, VIII.A.2.(c), VIII.A.3; EX1003, ¶365.

c) 22[b]: a planetary gear train connected to the plurality of electric motors, the planetary gear train comprising:

See supra, VIII.A.2.(d), VIII.A.3; EX1003, ¶366.

d) 22[c]: a plurality of input pinion gears, each driven by a respective one of the plurality of electric motors;

See supra, VIII.A.2.(e), VIII.A.3; EX1003, ¶367.

e) 22[d]: a main gear driven by the plurality of input pinion gears, the main gear comprising external gear teeth that mate with external gear teeth of the plurality of input pinion gears;

See supra, VIII.G.2; EX1003, ¶368.

f) 22[e]: a sun gear driven by the main gear and connected to the main gear by a shaft;

See supra, VIII.G.3.(a); EX1003, ¶369.

g) 22[f]: planetary gears driven by the sun gear, the planetary gears each comprising external gear teeth that mate with external gear teeth of the sun gear; and

See supra, VIII.G.3.(b); EX1003, ¶370.

h) 22[g]: a final drive gear driven by the planetary gears, the final drive gear comprising internal gear teeth that mate with the external gear teeth of the planetary gears; and

See supra, VIII.A.2.(f), VIII.G.3.(b); EX1003, ¶371.

i) 22[h]: a multi-plunger hydraulic fracturing pump that pumps fluid to a wellbore and comprises a pump crankshaft that is driven by the final drive gear of the planetary gear train, the final drive gear connected to the pump crankshaft by a plurality of arms extending from the final drive gear.

See supra, VIII.A.2.(b), VIII.A.2.(f); EX1003, ¶372.

H. Ground 4B: The Combination of Yi, Bergan, August, Joyner, Morris, and Rosman Renders Obvious Claims 8, 9, 17, 18, and 22

1. Motivation to Combine

a) *Yi Bergan*, *August*, *Joyner*, *Morris*, and *Rosman*

See supra, VIII.B.1, VIII.G.1; EX1003, ¶374.

2. Claim 8

Claim 8 is rendered obvious by the *Bergan-Rosman* combination in view of *Yi*, *August*, *Morris*, and *Joyner* for the same reasons discussed above in Ground 4A regarding Claim 8. *See supra*, VIII.G.2; EX1003, ¶¶375-379.

3. Claim 9

a) 9[a]

Limitation 9[a] is rendered obvious by the *Bergan-Rosman* combination in view of *Yi*, *August*, *Morris*, and *Joyner* for the same reasons discussed above in Ground 4A regarding Limitation 9[a]. *See supra*, VIII.G.3.(a); EX1003, ¶¶382-384.

b) 9[b]

Limitation 9[b] is rendered obvious by the *Yi-Bergan-August* combination in view of *Morris*, *Joyner*, and *Rosman* for the same reasons discussed above in Ground 4A regarding Limitation 9[b]. *See supra*, VIII.G.3.(b); EX1003, ¶¶385-386.

4. Claim 17

See supra, VIII.H.2; EX1003, ¶388.

5. Claim 18

a) 18[a]

See supra, VIII.H.3.(a); EX1003, ¶390.

b) 18[b]

See supra, VIII.H.3.(b); EX1003, ¶391.

I. Ground 5A: The Combination of Buckley, Bergan, August, Joyner, and Morris Renders Obvious Claim 19 in view of the Knowledge of a POSITA and, in the alternative, Jelaska

1. Motivation to Combine

a) *Buckley* with *Bergan*, *August*, *Joyner*, and *Morris*

See supra, VIII.A.1; EX1003, ¶393.

b) The *Buckley-Bergan-August* Combination with *Jelaska*

The *Buckley-Bergan-August* combination teaches a multi-plunger pump powered by multiple motors via a well-known variation of a planetary gearing configuration. *See supra*, VIII.A.1.(a). A POSITA would have searched for other references to better understand details of gearing configurations that are not described in *Buckley*, *Bergan*, and/or *August*. EX1003, ¶393. One such reference is *Jelaska*, which is a publication that provides granular details about gearing configurations that would be invaluable to a POSITA looking to apply the teachings of *Bergan* and *August* to a practical system. *Id*. In particular, *Jelaska*'s description of transmission ratio and its effect on the speed of a driven component would aid a POSITA's design of a gearing configuration when implementing the *Bergan-August* combination's gearing configuration to result in a particular pump speed. *Id*.; EX1012, 3.

Further, combining *Jelaska*'s teachings regarding transmission ratio to the *Buckley-Bergan-August* combination's pumping configuration is merely combining prior art elements (designing a transmission system to produce a desired output

speed and the planetary gearset of the *Bergan-August* combination) to known methods (the *Bergan-August* combination's modified planetary gearset) to yield predictable results (producing a desired pump speed as the output of the planetary gearset). EX1003, ¶394. Accordingly, a POSITA would have been motivated to combine *Jelaska*'s teachings of fundamental gearing system operations with the *Buckley-Bergan-August* combination's pumping configuration, and would have reasonably expected success in doing so. *Id*.

2. Claim 19

a) <u>The hydraulic fracturing method of claim 10, comprising limiting a maximum pump speed of the multi-plunger hydraulic fracturing pump, wherein the maximum pump speed is limited by a selection of a gear ratio of the planetary gear train and a speed at which the plurality of motors operate.</u>

The *Buckley-Bergan-August* combination renders obvious coupling multiple motors to a drive pump (as taught by *Buckley*) via a planetary gear train (as taught by the *Bergan-August* combination). *See supra*, VIII.A.2.(d). It was well-known in the art that the speed of the driver dictates the speed of the driven mechanism according to a transmission ratio, *i*, of the power transmission that links the driver to the driven mechanism, where the transmission ratio is defined as:

$$i = \frac{n_1}{n_2},$$

where n_1 is the driving shaft speed, and n_2 is the driven shaft speed. EX1003, ¶395 (citing *Jelaska* (EX1012), 3). A POSITA would have understood that in the

combined *Buckley-Bergan-August* system, the *Bergan-August* combination's planetary gear configuration (as modified by *August*'s star arrangement) is the transmission that links *Buckley*'s motors (driving mechanism) with its drive pump (driven mechanism), such that the "transmission ratio" of the planetary gear configuration is its "gear ratio." EX1003, ¶395.

Accordingly, in order to "limit[] a maximum pump speed of the multi-plunger pump," a POSITA would simply choose a maximum desired speed of the pump and coordinate the speed of the motors with the gear ratio of the gear train so that the maximum speed is not exceeded. *Id*.. The output speed of a gear train (the rotational speed delivered to the pump) is predictable based on the input speed of the motor(s) and the gear ratio of the drive train (the planetary gear system), as shown above. *Id*. Accordingly, the combination of *Buckley*, *Bergan*, and *August*, in view of the general knowledge of a POSITA, *Morris*, and *Joyner*, renders this limitation obvious. *Id*.; *Koninklijke Philips N.V. v. Google LLC*, 948 F.3d 1330, 1337-1338 (Fed. Cir. 2020) (permitting use of general knowledge of POSITA under §103 if supported by evidence of record); *Lone Star Silicon Innovations LLC v. Iancu*, 809 F. App'x 773, 776 (Fed. Cir. 2020) (non-precedential); *Samsung Elecs. Co., Ltd. v. WiPQTUS Inc.*, IPR2024-00023, Paper 7 at 83 (P.T.A.B. March 14, 2024); *Samsung Elecs. Co, Ltd v. Fendgo, LLC*, IPR2024-00113, Paper 11 at 30 (P.T.A.B. May 20, 2024); *Keysight Techs., Inc. v. Centripetal Networks, LLC*, IPR2023-00448, Paper 25 at 43-44

(P.T.A.B. June 3, 2024). In the alternative, the *Buckley-Bergan-August* combination renders this limitation obvious in view of *Jelaska*, *Morris*, and *Joyner* for the same reasons. EX1003, ¶395.

This understanding is consistent with the examiner's rejection of Claim 19 during prosecution, which found that for the prior art's disclosure of a fracturing pump, it would be "inherent [that] any assembled embodiment have such a maximum pump speed…as would be limited by components," which was not contested by the applicant. EX1002, 140-147, 161 (Claim 19 previously numbered as Claim 40).

J. Ground 5B: The Combination of Yi, Bergan, August, Joyner, and Morris Renders Obvious Claim 19 in view of the Knowledge of a POSITA and, in the alternative, Jelaska

1. Motivation to Combine

a) *Yi* with *Bergan*, *August*, *Joyner*, and *Morris*

See supra, VIII.A.1; EX1003, ¶397.

b) The *Yi-Bergan-August* Combination with the Teachings of *Jelaska*

For the same reasons discussed above in Ground 5A regarding the combination of the *Buckley-Bergan-August* combination with *Jelaska*, a POSITA would have been motivated to combine the *Yi-Bergan-August* combination with *Jelaska* and would have reasonably expected success in doing so (*i.e.*, because *Jelaska*'s teachings regarding transmission ratio would aid a POSITA in designing

a gearing configuration when implementing *Bergan*'s planetary gearing configuration (as modified by *August*), and combining *Jelaska*'s teachings to the *Yi-Bergan-August* combination's pumping configuration is merely combining prior art elements to known methods to yield predictable results). *See supra*, VIII.I.1; EX1003, ¶¶397-398.

2. Claim 19

Under the *Yi-Bergan-August* combination, it would have been obvious to a POSITA to coordinate the speed of *Yi*'s motors with the gear ratio of *Bergan*'s planetary gear train (as modified by *August*) so that the maximum speed of *Yi*'s pump is not exceeded *Morris*, and *Joyner*, the knowledge of a POSITA and, in the alternative, *Jelaska* for the same reasons discussed above in Ground 5A regarding Claim 19. *See supra*, VIII.I.2; EX1003, ¶399.

K. Ground 6A: The Combination of Buckley, Bergan, August, Joyner, and Morris Renders Obvious Claims 20 and 21 in view of the Knowledge of a POSITA and, in the alternative, in view of Jelaska and Tutterow

1. Motivation to Combine

a) <u>*Buckley* with *Bergan*, *August*, *Joyner*, *Morris*, and *Jelaska*</u>

See supra, VIII.A.1, VIII.I.1; EX1003, ¶401.

b) <u>*Buckley* with *Tutterow*</u>

Buckley discloses a multi-plunger pump for operating within a fracturing system. *See supra*, VIII.A.2.(b). A POSITA would have searched for other references to better understand details of multi-plunger pumps that are not described

in *Buckley*. EX1003, ¶402. One such reference is *Tutterow*, which is a publication that provides granular details about the operation of pumps that would be invaluable to a POSITA looking to apply the teachings of *Buckley* to a practical system. *Id*. In particular, *Tutterow*'s description of cavitation, its risks, and how to avoid it would aid a POSITA's selection of pump speed when implementing *Buckley*'s pumping system to avoid issues caused by cavitation. *Id*.; EX1013, 20, 30.

Further, combining *Buckley* with *Tutterow* is merely combining prior art elements (limiting pump operation speed to avoid cavitation, as taught by *Tutterow*) to known methods (*Buckley*'s pump) to yield predictable results (avoiding the negative effects of cavitation on the pumping system). EX1003, ¶403. Accordingly, a POSITA would have been motivated to combine *Tutterow*'s fundamental teachings regarding avoiding cavitation in plunger pumps by controlling the speed of the pump with *Buckley*'s pump, and would have reasonably expected success in doing so. *Id*.

2. Claim 20

a) <u>The hydraulic fracturing method of claim 19, wherein the maximum pump speed correlates with a critical plunger speed of the multi-plunger hydraulic fracturing pump.</u>

It would have been obvious to a POSITA to select the maximum speed of *Buckley*'s pump to be less than a speed at which cavitation occurs. Cavitation is a well-known problem that occurs in pumps, and is the phenomenon that occurs when "the incoming liquid [into a pump] is at a pressure with insufficient margin above

the vapour pressure" of the liquid, which results in "vapour cavities or bubbles" appearing in the liquid. EX1003, ¶72, 405 (citing *Tutterow* (EX1013), 20). A POSITA also would have known that cavitation is to be avoided, since it causes several problems such as erosion and increased noise and vibration. *Id*..

Further, it was well-known that for positive displacement pumps (*e.g.*, plunger pumps, such as the pump disclosed by *Buckley*), cavitation begins to occur at a particular speed and the maximum speed of such pumps is therefore limited to avoid cavitation. *Id*. (citing *Tutterow* (EX1013), 30 (explaining that cavitation is exacerbated as the speed of a pump is increased, thereby "limiting the maximum speed" of the pump). Accordingly, it would have been obvious to a POSITA to operate the multi-plunger pump disclosed by *Buckley* below the speed at which cavitation occurs (a "critical plunger speed associated with the multi-plunger hydraulic fracturing pump"). *Id*., ¶406. *Tutterow* renders this obvious for the same reasons. Id.

This understanding of a "critical plunger speed" is consistent with the '533 Patent, which refers to "critical speed" of a pump when discussing the speed at which cavitation is avoided in a pump. *See, e.g.*, EX1001, 2:1-4, 2:21-25.

Therefore, *Buckley* in view of *Bergan*, *August*, *Morris*, *Joyner*, the knowledge of a POSITA and, in the alternative, *Jelaska* renders Claim 20 obvious.

3. Claim 21

a) The hydraulic fracturing method of claim 19, wherein the maximum pump speed is 5% over a critical plunger speed of the multi-plunger hydraulic fracturing pump.

The ’533 Patent admits that it was well-known for fracturing pumps to have operating speeds above the speed at which cavitation first occurs in the pumps. *See* EX1001, Background, 1:46-58, 2:1-4, 2:15-20; EX1003, ¶407.

As discussed above with respect to Claim 20, a POSITA would have understood that the speed of a pump (*i.e.*, the speed of a pump’s plungers) at which cavitation occurs would be a “critical plunger speed” of the pump, which is consistent with the ’533 Patent’s use of the term “critical speed.” *See supra*, VIII.K.2; EX1003, ¶¶404-405.

It would have been obvious to a POSITA that the maximum speed of the pump taught by *Buckley* would be 5% or less over the speed at which cavitation occurs in the pump (the “critical plunger speed”). EX1003, ¶¶407-409. A POSITA would have understood that while cavitation may have undesirable results that negatively affect the life and efficiency of the pump, cavitation would not immediately stop the pump from running. *Id.*, ¶¶409 (citing *Tutterow* (EX1013), 20, which explains that “total loss of pump-developed head occurs” only in “extreme cases” of cavitation). Accordingly, a POSITA would have understood that operating a pump above the speed at which cavitation occurs would involve balancing risks (*e.g.*, loss of pump

life and pumping pressure) with rewards (*e.g.*, increased flowrate). *Id*. This type of operation—to gain higher flowrate while accepting a small reduction in life of pump components or pumping pressure—was well known. *Id*. In the alternative, *Tutterow* renders such operation obvious for the same reasons. *Id*. Indeed, the '533 Patent admits that such operation was well known. *See* EX1001, 1:46-58, 2:1-4, 2:15-20.

Accordingly, Claim 21 is rendered obvious by *Buckley* in view of *Bergan*, *August*, *Morris*, *Joyner*, the knowledge of a POSITA and, in the alternative, *Jelaska*. EX1003, ¶*.

L. Ground 6B: The Combination of Yi, Bergan, August, Joyner, and Morris Renders Obvious Claims 20 and 21 in view of the Knowledge of a POSITA and, in the alternative, in view of Jelaska and Tutterow

1. Motivation to Combine

a) <u>*Yi* with *Bergan*, *August*, *Joyner*, *Morris*, and *Jelaska*</u>

See supra, VIII.B.1, VIII.J.1; EX1003, ¶412.

b) <u>*Yi* with *Tutterow*</u>

For the same reasons discussed above in Ground 6A regarding the combination of *Buckley* with *Tutterow*, a POSITA would have been motivated to combine *Yi* with *Tutterow* and would have reasonably expected success in doing so (*i.e.*, *Tutterow*'s description of cavitation, its risks, and how to avoid it would aid a POSITA's selection of pump speed when implementing *Yi*'s pumping system to avoid issues caused by cavitation, and combining *Tutterow*'s teachings to the *Yi*'s

pumping configuration is merely combining prior art elements to known methods to yield predictable results). *See supra* VIII.K.1.(b); EX1003, ¶¶412-414.

2. Claim 20

For the same reasons discussed above in Ground 6A regarding Claim 20, the *Yi* renders Claim 20 obvious *Bergan*, *August*, *Morris*, *Joyner*, the knowledge of a POSITA and, in the alternative, *Jelaska* and *Tutterow*. *See supra*, VIII.K.2; EX1003, ¶¶415-417.

3. Claim 21

a) The hydraulic fracturing method of claim 19, wherein the maximum pump speed is 5% over a critical plunger speed of the multi-plunger hydraulic fracturing pump.

For the same reasons discussed above in Ground 6A regarding Claim 21, the *Yi* combination renders Claim 21 obvious in view of the knowledge of a POSITA, *Bergan*, *August*, *Morris*, *Joyner*, the knowledge of a POSITA and, in the alternative, *Jelaska* and *Tutterow*. *See supra*, VIII.K.3; EX1003, ¶¶418-421.

M. Ground 7A: The Combination of Buckley, Bergan, August, Joyner, Morris, Rosman, and Payne Renders Obvious Claim 23

1. Motivation to Combine

a) *Buckley* with *Bergan*, *August*, *Joyner*, *Morris*, *Rosman,* and *Payne*

See supra, VIII.A.1, VIII.E.1, VIII.G.1; EX1003, ¶423.

2. Claim 23

a) The hydraulic fracturing system of claim 22, further comprising a variable frequency drive (VFD) associated with the

plurality of motors and configured to control a pump rotational speed of the multi-plunger hydraulic fracturing pump.

See supra, VIII.E.2; EX1003, ¶424.

N. Ground 7B: The Combination of Yi, Bergan, August, Joyner, Morris, Rosman, and Payne Renders Obvious Claims 22 and 23

1. Motivation to Combine

a) *Yi* with *Bergan*, *August*, *Joyner*, *Morris*, *Rosman,* and *Payne*

See supra, VIII.B.1, VIII.F.1, VIII.H.1; EX1003, ¶425.

2. Claim 22

a) 22[p]

See supra, VIII.B.2.(a); EX1003, ¶426.

b) 22[a]

See supra, VIII.F.2; EX1003, ¶427.

c) 22[b]

See supra, VIII.B.2.(d), VIII.F.2; EX1003, ¶428.

d) 22[c]

See supra, VIII.B.2.(e), VIII.F.2; EX1003, ¶429.

e) 22[d]

See supra, VIII.H.2; EX1003, ¶430.

f) 22[e]

See supra, VIII.H.3.(a); EX1003, ¶431.

g) 22[f]

See supra, VIII.H.3.(b); EX1003, ¶432.

h) 22[g]

See supra, VIII.B.2.(f), VIII.H.3.(b); EX1003, ¶433.

i) 22[h]

See supra, VIII.B.2.(b), VIII.B.2.(f); EX1003, ¶434.

3. Claim 23

See supra, VIII.F.2; EX1003, ¶435.

O. Ground 8A: The Combination of Buckley, Bergan, August, Joyner, Morris, Rosman, Payne, and Karassik Renders Obvious Claims 24 and 25

1. Motivation to Combine

a) *Buckley* with *Bergan*, *August*, *Joyner*, *Morris*, *Rosman*, *Payne*, and *Karassik*

See supra, VIII.A.1, VIII.C.1, VIII.E.1, VIII.G.1; EX1003, ¶437.

2. Claim 24

a) The hydraulic fracturing system of claim 23, wherein the multi-plunger hydraulic fracturing pump comprises seven plungers.

See supra, VIII.C.2; EX1003, ¶438.

3. Claim 25

a) The hydraulic fracturing system of claim 23, wherein the multi-plunger hydraulic fracturing pump comprises nine plungers.

See supra, VIII.C.3; EX1003, ¶439.

P. Ground 8B: The Combination of Yi, Bergan, August, Joyner, Morris, Rosman, Payne, and Karassik Renders Obvious Claims 24 and 25

1. Motivation to Combine

a) *Yi* with *Bergan*, *August*, *Joyner*, *Morris*, *Rosman*, *Payne*, and *Karassik*

See supra, VIII.B.1, VIII.D.1, VIII.F.1, VIII.H.1; EX1003, ¶441.

2. Claim 24

See supra, VIII.D.2; EX1003, ¶442.

3. Claim 25

See supra, VIII.D.3; EX1003, ¶443.

IX. OBJECTIVE INDICIA DO NOT SUPPORT PATENTABILITY

Petitioners are unaware of any evidence of secondary considerations of non-obviousness tied to the claimed invention of the ’533 Patent identified by PO. Petitioner reserves the right to address any such alleged evidence should PO identify it.

X. CONCLUSION

Petitioners respectfully request that *inter partes* review of the ’533 Patent be instituted and that the challenged claims be cancelled as unpatentable under 35 U.S.C. §318(b).

Respectfully submitted,

BAKER BOTTS L.L.P.

Chad C. Walters (Reg. No. 48,022)

Lead Counsel for Petitioners

Date: March 28, 2025

CERTIFICATE OF SERVICE

The undersigned hereby certifies on this 28th day of March 2025, that true and correct copies of the foregoing PETITION FOR INTER PARTES REVIEW OF U.S. PATENT NO. 11,959,533, Exhibits 1001-1056, and Petitioners' power of attorney were served in their entirety to Patent Owner via FedEx Express® or Express Mail:

Henry Patent Law Firm PLLC

8350 N. Central Expwy., Suite 1750

Dallas, Texas 75206

BAKER BOTTS L.L.P.

Chad C. Walters (Reg. No. 48,022)
Lead Counsel for Petitioners

Date: March 28, 2025

2001 Ross Ave., Suite 900
Dallas, TX 75201-2980
Phone: (214) 953-6511
Fax: (214) 661-4511
chad.walters@bakerbotts.com

CERTIFICATE OF COMPLIANCE WITH TYPE-VOLUME LIMITATION, TYPEFACE REQUIREMENTS, AND TYPE STYLE REQUIREMENTS

1. This Petition complies with the type-volume limitation of 14,000 words, comprising 13,986 words, excluding the parts exempted by 37 C.F.R. § 42.24(a).

2. This Petition complies with the general format requirements of 37 C.F.R. § 42.6(a) and has been prepared using Microsoft® Word in 14-point Times New Roman.

Respectfully submitted,

BAKER BOTTS L.L.P.

Chad C. Walters (Reg. No. 48,022)
Lead Counsel for Petitioners

Date: March 28, 2025

2001 Ross Ave., Suite 900
Dallas, TX 75201-2980
Phone: (214) 953-6511
Fax: (214) 661-4511
chad.walters@bakerbotts.com