## CLASS 475, PLANETARY GEAR TRANSMISSION SYSTEMS OR COMPONENTS

### SECTION I - CLASS DEFINITION

This is the class for planetary gear power transmission and elements thereof, such transmission being defined as an assembly of parts including interacting first and second gears each having a central axis and wherein, during at least one mode of operation, the axis of one of the gears follows a path extending around the axis of the other gear.

(1) Note. A nominal recitation of a device for applying power to, or receiving power from, a structure of this class will not exclude a patent from being placed in this class.

### SECTION II - LINES WITH OTHER CLASSES AND WITHIN THIS CLASS

A method or apparatus for manufacturing a device of this class is not found herein (Class 475), but is found in an appropriate manufacturing class. See References to Other Classes, below.

### SECTION III - REFERENCES TO OTHER CLASSES

SEE OR SEARCH CLASS:

29, Metal Working, subclasses 893+ and the other subclasses in Class 29, directed to process and apparatus of mechanical manufacture. (See Lines With Other Classes and Within This Class, above.)

74, Machine Element or Mechanism, subclass 52 and 63+ for mechanical movements which may include planetary gearing, 640 for gearing of the “strain wave” type, and 843+ for a planetary gearing control interrelated with a motor control.

180, Motor Vehicles, for combinations of significant vehicle structure which may include planetary gearing, especially subclasses 6.2+ for steering by driving; 65.7 for an electric motor driven change speed gearing; 165 for the use of a fluid accumulator or flywheel to store and release energy; 233+ for a four wheel drive vehicle; 292+ and 374+ for spatial relationships of a transmission and a vehicle frame; and 369 and 372 for planetary combinations.

184, Lubrication, for lubrication generally, and especially subclass 6.12 which has not been screened for planetary gearing.

188, Brakes, for brakes*, per se.

192, Clutches and Power-Stop Control, subclasses headed “INTERRELATED POWER DELIVERY CONTROLS”, which may include planetary gearing controls combined with clutch* and motor controls; 3.21+ and 3.34 for an impeller-turbine type fluid drive in combination with a clutch* and brake*, respectively; 3.52+ for controls for a planetary transmission and coaxial clutch*; and 215+ for a transmission control and brake*.

477, Interrelated Power Delivery Controls, Including Engine Control, for interrelated control between an engine and a transmission, clutch, or brake.

701, Data Processing: Vehicles, Navigation, and Relative Location, subclasses 51+ for a transmission control of that type.

### SECTION IV - GLOSSARY

The following glossary will define words or phrases used in the class and subclass definitions and are identified by an asterisk which appears after the word, or in the instance of a phrase, after the last word of the phrase:

BEVEL GEAR

A gear having radial teeth extending in the same general direction as the rotational axis of the gear, but inclined with respect to the rotational axis of the gear.

BRAKE

Mechanism to selectively or automatically stop a moving part with respect to a stationary part.

CLUTCH

Mechanism to selectively or automatically couple two relatively moving parts together for common movement or to uncouple such parts.

CONDITION RESPONSIVE

Mechanism to sense a condition or change of condition in the environment of a planetary gear transmission; and, in response to such sensing, effect a control func-



U.S. Well - Exhibit 2026
Liberty v. U.S. Well - IPR2025-00778
Page 1 of 70

tion on the transmission or on a drive train* to or from such transmission.

DIFFERENTIAL TRANSMISSION

Mechanism having separate outputs driven simultaneously from a different member of a planetary gear transmission; the arrangement being such that a change in speed of one of the outputs, in at least one mode of operation, has a direct effect on the speed of the other output.

DRIVE TRAIN

Mechanism including a group of interconnected elements which transfers rotational power from a power source* to a load device*.

INPUT MEMBER

Mechanism which receives rotational power from a power source*, and transfers such rotational power to a planetary gear transmission.

LOAD DEVICE

Mechanism which receives rotational power from an output member* to put such rotational power to useful work.

ONE-WAY BRAKE

A brake* which automatically engages to stop a rotating part when the rotating part attempts to rotate in a first direction, but which permits rotation of the rotating part in a direction opposite to said first direction.

ONE-WAY CLUTCH

A clutch* which automatically couples two rotatable parts together for joint rotation when a first of said parts rotates in a first direction, but which automatically uncouples said parts when the first of said parts rotates in a direction opposite to said first direction, or uncouples said parts when the second part rotates faster than the first part.

ORBIT GEAR

A gear mounted for rotation about the same axis as a planet carrier* and having a drive face contacting a drive face of a planet pinion* at a location radially outward from the rotational axis of the planet pinion*.

OUTPUT MEMBER

Mechanism which receives rotational power from a planetary gear transmission and transfers such rotational power to a load device*.

OVERDRIVE

Mechanism wherein an output member* is driven at a greater rotational velocity than the rotational velocity of an input member*.

PLANET CARRIER

A device mounted for rotation about a first axis, and carrying a planet pinion*, the planet pinion having a second rotational axis.

PLANET PINION

A gear mounted on a planet carrier*, said carrier rotatable about a first axis, and said gear rotatable about a second axis.

POWER SOURCE

Agency for supplying rotational power to an input member* of a planetary gear transmission.

SPEED RATIO

Rotational velocity of an output member* divided by the rotational velocity of an input member*.

SPUR GEAR

A gear having radially extending teeth on the rim, wherein the edges of the teeth extend in a direction generally parallel with rotational axis of the gear.

SUN GEAR

A gear mounted for rotation about the same axis as the rotational axis of a planet carrier* and having a drive face contacting a drive face of a planet pinion* between the axis of the planet pinion and the axis of the planet carrier.

UNDERDRIVE

Mechanism wherein an output member* is driven at a slower rotational velocity than the rotational velocity of an input member*.



U.S. Well - Exhibit 2026
Liberty v. U.S. Well - IPR2025-00778
Page 2 of 70

UNITARY DRIVE

Mechanism wherein an output member is driven at the same rotational velocity as an input member.

WORM GEAR

A gear having radial teeth on the rim with the edges of the teeth arranged as a helix extending around the rotational axis of the gear.

SUBCLASSES

**1 INPUT FROM INDEPENDENT POWER SOURCES:**
This subclass is indented under the class definition. Subject matter including at least two power sources* which act separately or in unison.

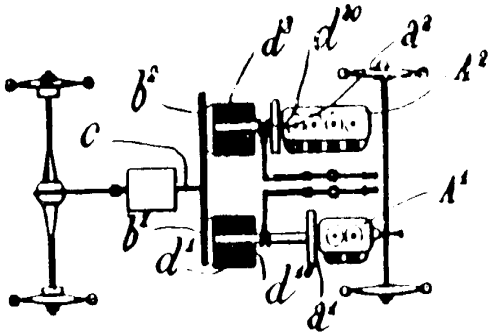

SEE OR SEARCH THIS CLASS, SUBCLASS:
13, for two power sources*, one of which starts the other and said one is subsequently driven by the other.
267+, for a flywheel which is, at times, used as a power source*.

SEE OR SEARCH CLASS:
60, Power Plants, subclasses 698+ for a residual system of plural motors.
74, Machine Element or Mechanism, subclasses 661 and 665+ for related subject matter.

**2 Condition responsive motor control:**
This subclass is indented under subclass 1. Subject matter wherein a power source* is a motor which is condition responsive*.

SEE OR SEARCH CLASS:
477, Interrelated Power Delivery Controls, Including Engine Control, for interrelated control between an engine and a transmission, clutch, or brake.

**3 Including manual input:**
This subclass is indented under subclass 1. Subject matter wherein a power source* is human force.

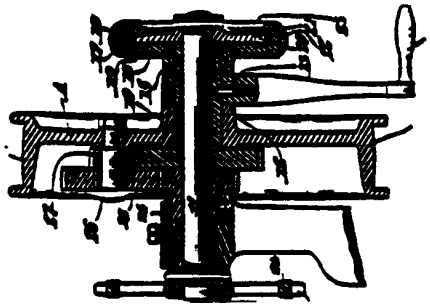

auxiliary hand crank; input pulley; output

SEE OR SEARCH THIS CLASS, SUBCLASS:
349, for related subject matter.

**4 And electric motor input:**
This subclass is indented under subclass 3. Subject matter wherein a power source* includes a motor driven by electricity.



U.S. Well - Exhibit 2026
Liberty v. U.S. Well - IPR2025-00778
Page 3 of 70

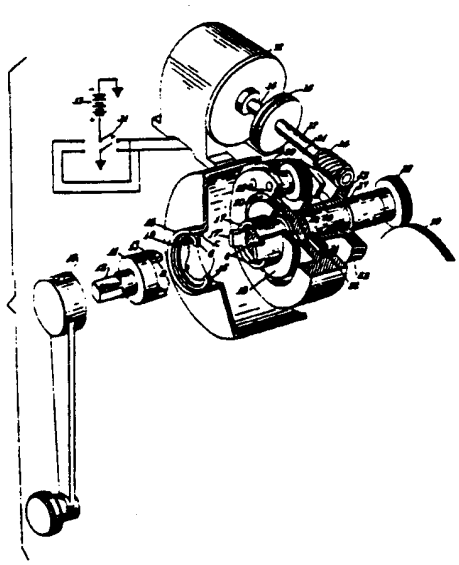

SEE OR SEARCH THIS CLASS, SUBCLASS:

5, and 149+, for related subject matter.

**5 Including electric motor input:**

This subclass is indented under subclass 1. Subject matter wherein a power source* includes a motor driven by electricity.

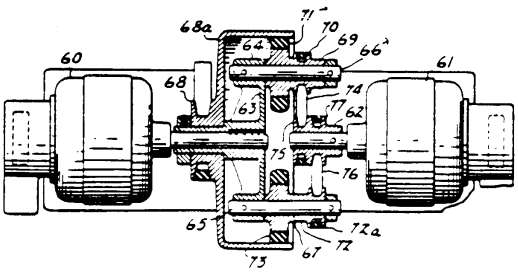

SEE OR SEARCH THIS CLASS, SUBCLASS:

4, for subject matter including a manual and electric drive.

149+, for a planetary transmission having an electric motor drive.

**6 Plural outputs:**

This subclass is indented under subclass 1. Subject matter including means to drive at least two load devices*.

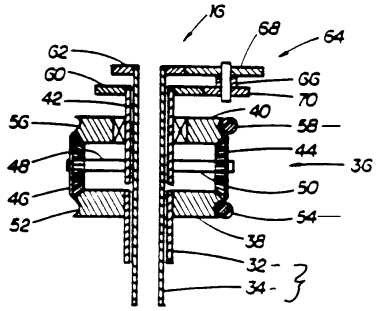

input; input; outputs

SEE OR SEARCH THIS CLASS, SUBCLASS:

332, and see the search notes therein for related subject matter.

**7 Worm gear in drive train:**

This subclass is indented under subclass 1. Subject matter wherein a drive train* includes a worm gear*.

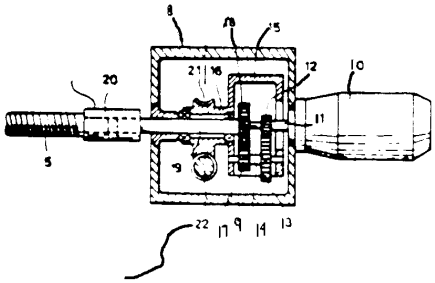

output; input; worm drive input

**8 One-way clutch or brake in drive train:**

This subclass is indented under subclass 1. Subject matter wherein a drive train* includes a one-way clutch* or a one-way brake*.



U.S. Well - Exhibit 2026
Liberty v. U.S. Well - IPR2025-00778
Page 4 of 70

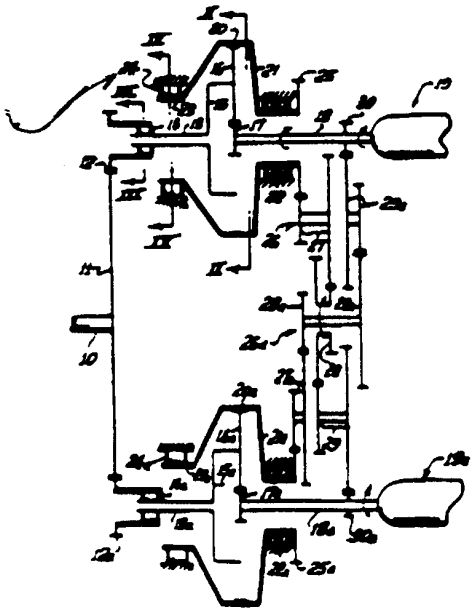

one-way brake; engine #1; engine #2

SEE OR SEARCH CLASS:

188, Brakes, for a one-way brake, per se.

192, Clutches and Power-Stop Control, for a one-way clutch, per se.

**9 Bevel planet pinion in drive train:**

This subclass is indented under subclass 1. Subject matter wherein a planetary gear transmission in a drive train* includes a planet pinion* which is a bevel gear*.

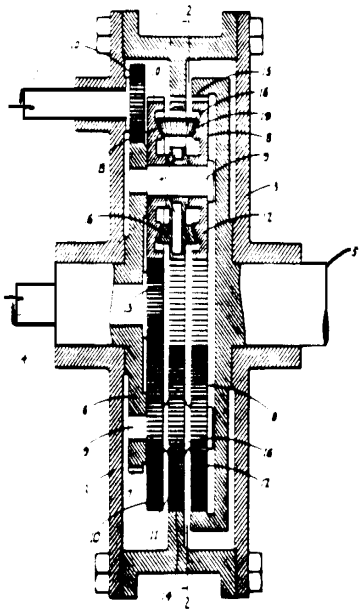

input; input; output

SEE OR SEARCH THIS CLASS, SUBCLASS:

190+, 197, 230+, 273+, 306+, and 336, for related subject matter.

**10 Intermeshing planet pinions in drive train:**

This subclass is indented under subclass 1. Subject matter wherein a drive train* includes a plurality of planet pinions* which intermesh with each other.

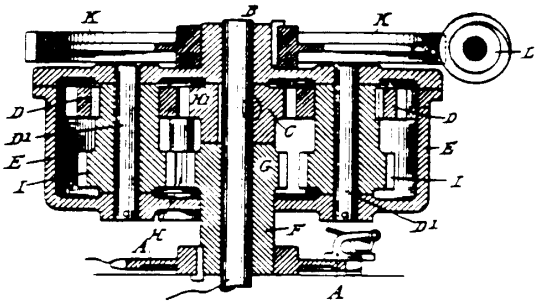

input; output; input



U.S. Well - Exhibit 2026
Liberty v. U.S. Well - IPR2025-00778
Page 5 of 70

**11 ROTARY PLANETATING OUTPUT:**
This subclass is indented under the class definition. Subject matter wherein a load device* is connected to a planet pinion* for rotation about the axis of the planet pinion* and also for rotation about the axis of a planet carrier*.

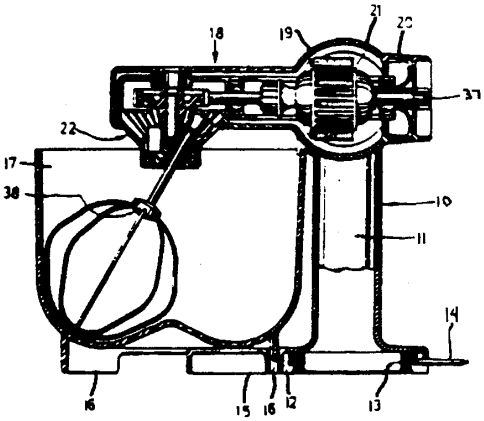

**12 REVERSAL OF DIRECTION OF POWER FLOW CHANGES POWER TRANSMISSION TO ALTERNATE PATH:**
This subclass is indented under the class definition. Subject matter having two alternately usable power paths between a single input member* and a single output member* so arranged that (1) the interchange of the input and output relationship or (2) the change of direction of rotation of the input, changes the path through which the power is transmitted.

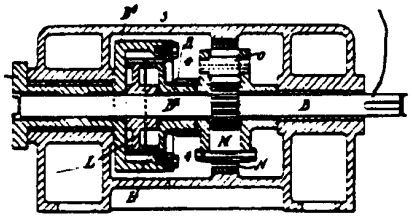

output driven in same direction at variable speeds; input driven in opposite directions

SEE OR SEARCH THIS CLASS, SUBCLASS:
126, for a valve, actuated in response to the reversal of rotation of an element of a planetary transmission, to control a fluid operated clutch or brake.

SEE OR SEARCH CLASS:
74, Machine Element or Mechanism, subclasses 810.1+ for means to effect this function with nonplanetary gearing.

**13 Input and output exchange functions:**
This subclass is indented under subclass 12. Subject matter wherein in response to the interchange of roles between the input member* and output member* the path through which power is transmitted is changed.

(1) Note. To be placed herein the transmission must have a useful load at each of its input and output ends. Most of the patents herein disclose either motor-generators or motor-pumps used to start an engine which in turn drives the generator or pump.

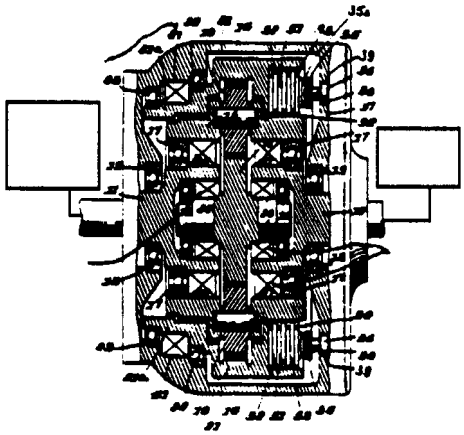

one-way brake; motorpump unit; one-way clutch; pump-motor acts as input (underdrive) to start I.C. engine then I.C. engine drives motor-pump; I.C. engine; one-way clutch

SEE OR SEARCH CLASS:
74, Machine Element or Mechanism, subclass 810.2 for the exchange of input and output roles using nonplanetary gearing.
290, Prime-Mover Dynamo Plants, subclass 38 for gearing of this type combined with significant generator structure.



U.S. Well - Exhibit 2026
Liberty v. U.S. Well - IPR2025-00778
Page 6 of 70

**14 CYCLICAL OR INTERMITTENT DRIVE:**

This subclass is indented under the class definition. Subject matter wherein means is included to vary the rotational speed of a gear of a planetary transmission according to a predetermined pattern without operator intervention; or wherein means is included to provide driving force to a gear of a planetary transmission at predetermined intervals without operator intervention.

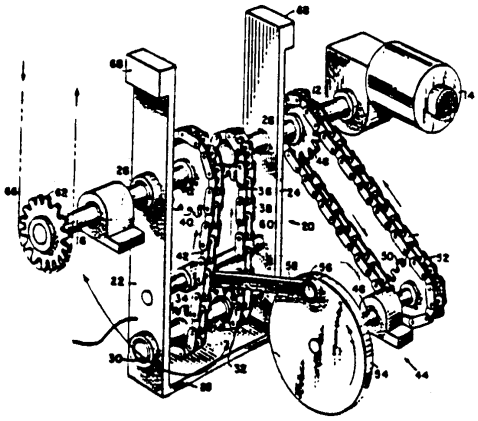

planet carrier

**15 Plural outputs:**

This subclass is indented under subclass 14. Subject matter including means to drive at least two load devices*.

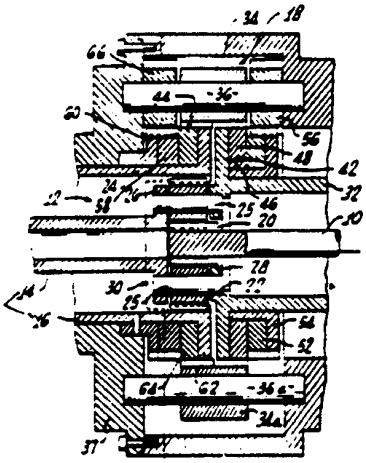

output; input shaft

SEE OR SEARCH THIS CLASS, SUBCLASS:

332, and see the search notes therein for related subject matter.

**16 With means to adjust cycle or drive during operation:**

This subclass is indented under subclass 14. Subject matter which includes a control member, either manually or automatically operated during operation of the transmission, to alter a rotational speed pattern or driving force interval.

**17 Mutilated or noncircular gear in drive train:**

This subclass is indented under subclass 14. Subject matter wherein a gear in a drive train* has an irregular pattern of gear teeth; or wherein the circumference of the gear rim is a shape other than round.

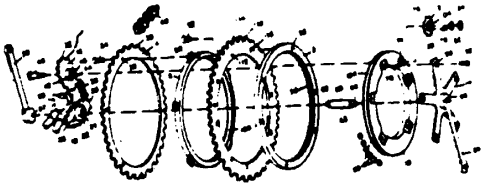

elliptical gear

**18 STEERING BY DRIVING:**

This subclass is indented under the class definition. Subject matter wherein plural drive trains* are utilized for driving two load devices* on opposite sides of a vehicle at different relative speed ratios* to cause turning.

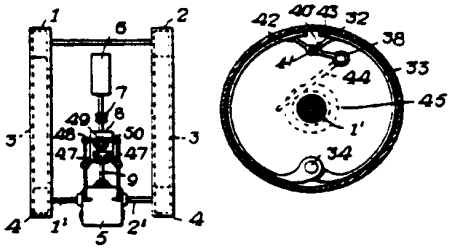



U.S. Well - Exhibit 2026
Liberty v. U.S. Well - IPR2025-00778
Page 7 of 70

SEE OR SEARCH THIS CLASS, SUBCLASS:

3, for steering by driving where manual steering constitutes a second power input to the drive trains.

223+, for means to apply power to only one of two differential outputs for the purpose of steering.

SEE OR SEARCH CLASS:

180, Motor Vehicles, subclasses 6.2+, for steering by driving combined with vehicle structure and see the (1) Note under subclass 6.2 for the line.

477, Interrelated Power Delivery Controls, Including Engine Control, subclass 1 for steering by driving with prime mover control.

**19 With condition responsive steer control:**

This subclass is indented under subclass 18. Subject matter wherein means to cause turning is condition responsive*.

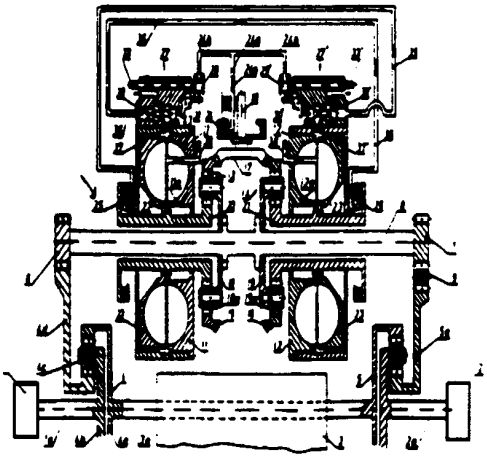

speed sensor

SEE OR SEARCH CLASS:

477, Interrelated Power Delivery Controls, Including Engine Control, for steering by driving with prime mover control.

**20 With cooling or lubrication:**

This subclass is indented under subclass 18. Subject matter provided with means to change the temperature of an element of, or means to apply or direct a lubricating fluid between, moving parts of a drive train*.

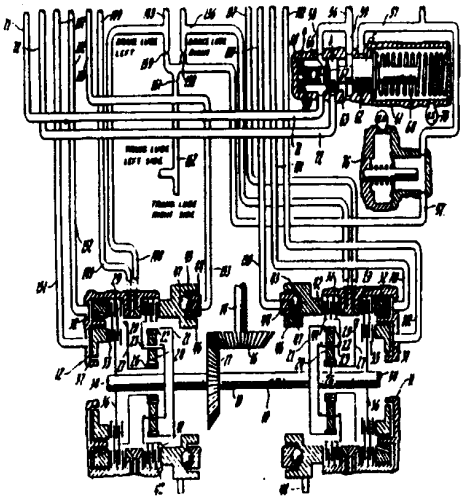

SEE OR SEARCH THIS CLASS, SUBCLASS:

159+, for drive train* lubrication generally.

161, for drive train* cooling or heating.

**21 With infinitely variable drive:**

This subclass is indented under subclass 18. Subject matter wherein at least one of the plural drive trains* includes a means to vary the speed ratio* steplessly.



U.S. Well - Exhibit 2026
Liberty v. U.S. Well - IPR2025-00778
Page 8 of 70

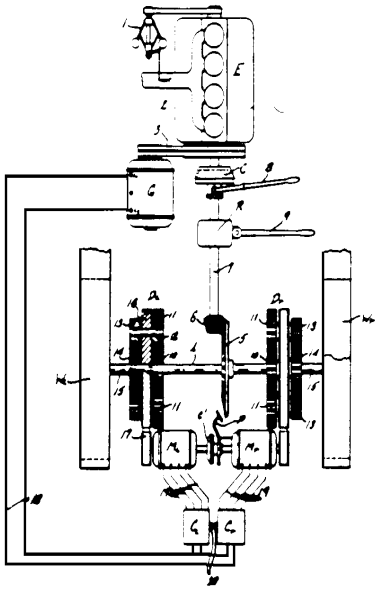

**22 Variable drive is fluid drive:**
This subclass is indented under subclass 21. Subject matter wherein the stepless ratio change is effected by the use of a hydraulic or pneumatic drive train*.

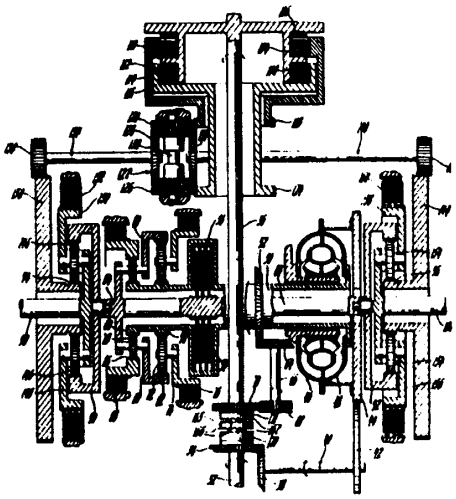

**23 Hydrostatic type:**
This subclass is indented under subclass 22. Subject matter wherein the fluid drive train* includes an expansible chamber pump which transfers power via fluid to an expansible chamber motor to provide useful work.

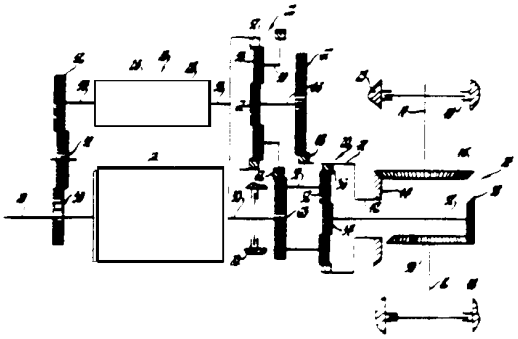

pump motor; variable speed ratio range unit

SEE OR SEARCH THIS CLASS, SUBCLASS:
72+, for the general combination of planetary gearing and hydrostatic drive.

SEE OR SEARCH CLASS:
60, Power Plants, subclasses 325+, for a pump and motor combination, per se.

**24 Plural pump-motor sets:**
This subclass is indented under subclass 23. Subject matter wherein at least two pump-motor combinations are included in the plural drive trains*.

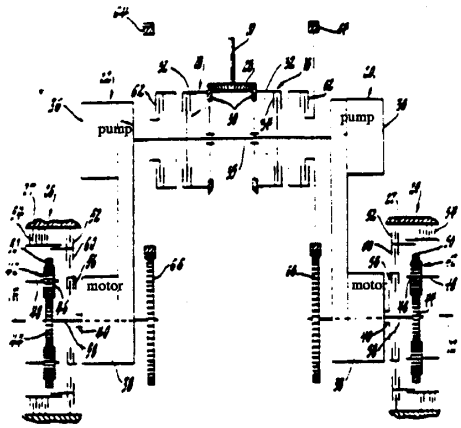




U.S. Well - Exhibit 2026
Liberty v. U.S. Well - IPR2025-00778
Page 9 of 70

**25 Belt type:**

This subclass is indented under subclass 21. Subject matter wherein said ratio varying means comprises an endless flexible band.

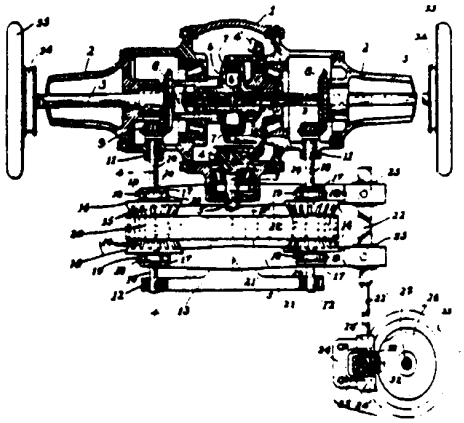

SEE OR SEARCH THIS CLASS, SUBCLASS:

210+, for variable speed or direction belt transmission combined with a planetary transmission.

SEE OR SEARCH CLASS:

474, Endless Belt Power Transmission Systems or Components, appropriate subclasses, for steplessly variable belt transmissions, per se.

**26 Variable drive is friction drive:**

This subclass is indented under subclass 21. Subject matter wherein the stepless ratio change is effected by a drive train* which includes toothless gearing that transmits force by frictional contact.

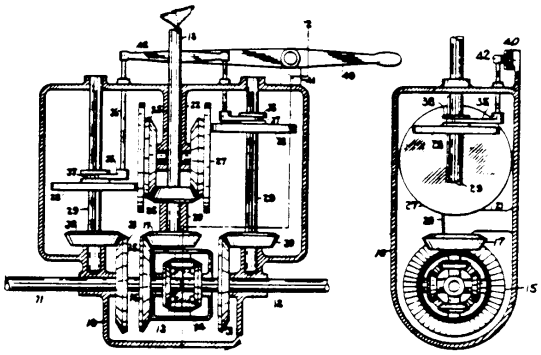

SEE OR SEARCH THIS CLASS, SUBCLASS:

114+, for fluid control of planetary friction gearing.

185+, for planetary friction gearing, per se.

214+, for nonplanetary variable speed or direction friction gearing combined with a planetary transmission.

SEE OR SEARCH CLASS:

476, Friction Gear Transmission Systems or Components, for variable speed nonplanetary friction gearing, per se.

**27 Fluid steer control:**

This subclass is indented under subclass 18. Subject matter wherein the plural drive trains* include controlling clutches* or brakes* which are operated by hydraulic or pneumatic pressure.



U.S. Well - Exhibit 2026
Liberty v. U.S. Well - IPR2025-00778
Page 10 of 70

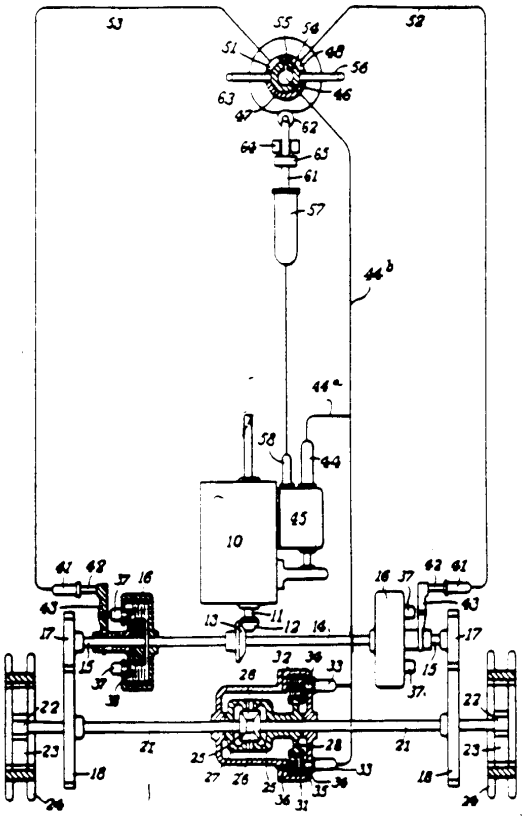

SEE OR SEARCH THIS CLASS, SUBCLASS:

23+, for the control of pump-motor units for steering purposes.

**28 With plural power paths to a planetary transmission at each output:**

This subclass is indented under subclass 18. Subject matter wherein the plural drive trains* include a planetary gear set adjacent each load device*, each gear set having one output member* and two input members*.

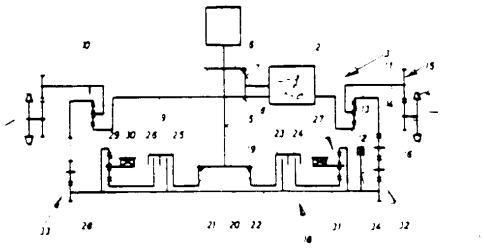

output; output

SEE OR SEARCH THIS CLASS, SUBCLASS:

21+, for this combination with a steplessly variable drive.

**29 With planetary reaction brake steering:**

This subclass is indented under subclass 18. Subject matter wherein means for driving one load device* at a speed ratio* different from the other load device includes a brake control for a planetary element of one of the drive trains.

(1) Note. The planetary element to be braked may not be an output member* and form a basis for classification in the subclass.

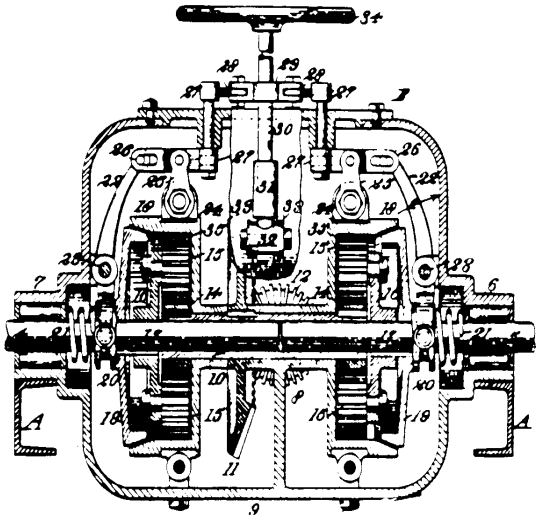

SEE OR SEARCH THIS CLASS, SUBCLASS:

224, for means to apply power to only one of two differential outputs, while braking the other, for the purpose of steering.

**30 And carrier input to planetary gearing:**

This subclass is indented under subclass 29. Subject matter wherein an input member* is a planet carrier*.

(1) Note. The carrier input is usually part of a differential transmission*.



U.S. Well - Exhibit 2026
Liberty v. U.S. Well - IPR2025-00778
Page 11 of 70

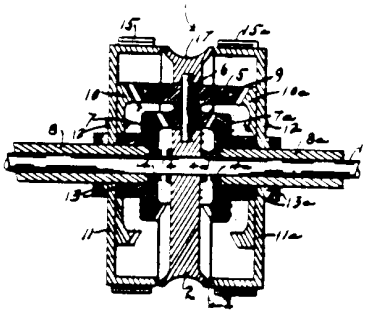

input

**31 FLUID DRIVE OR CONTROL OF PLANETARY GEARING:**

This subclass is indented under the class definition. Subject matter wherein (1) a planetary transmission is combined with a hydraulic or pneumatic torque transmitting means to form a drive train*, or (2) means is provided to change the speed ratio* or otherwise regulate the operation of a planetary transmission and such means is actuated, at least in part, by hydraulic or pneumatic energy.

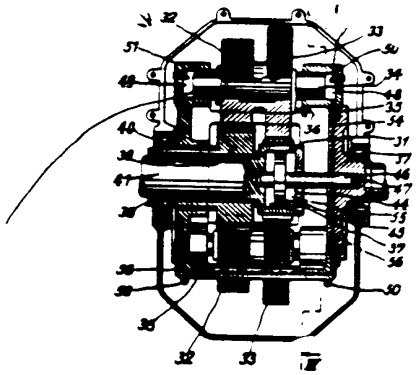

fluid equalizes axial thrust on gears

SEE OR SEARCH THIS CLASS, SUBCLASS:

18+, for fluid drive or control in a steering by driving arrangement.

SEE OR SEARCH CLASS:

477, Interrelated Power Delivery Controls, Including Engine Control, for fluid drive or control of planetary gearing in combination with prime mover control.

**32 Diverse fluid drives:**

This subclass is indented under subclass 31. Subject matter wherein at least two different types of fluid torque transmitting means are included in the drive train*.

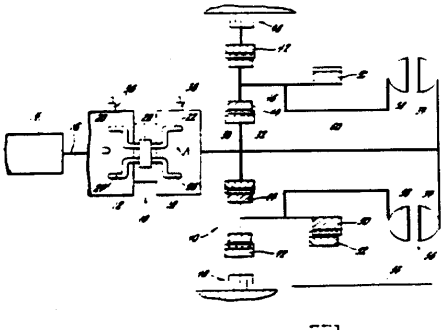

engine

**33 Plural impeller-turbine type fluid circuits:**

This subclass is indented under subclass 31. Subject matter wherein two fluid torque transmitting means are present in the drive train* and each includes a rotary vaned pump which acts as an input element and a coaxial rotary vaned turbine which acts as an output element.

(1) Note. For a more detailed description of this type of fluid drive see Class 60 subclass 330 and the notes thereunder.



U.S. Well - Exhibit 2026
Liberty v. U.S. Well - IPR2025-00778
Page 12 of 70

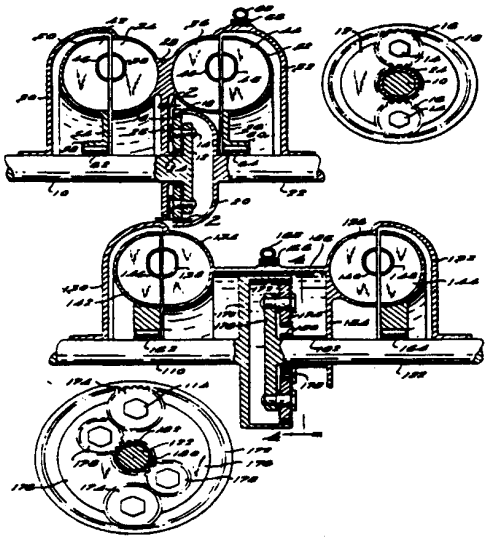

**34 Fill and empty type:**
This subclass is indented under subclass 33. Subject matter wherein one of the fluid torque transmitting means may be emptied or filled to change the speed ratio.

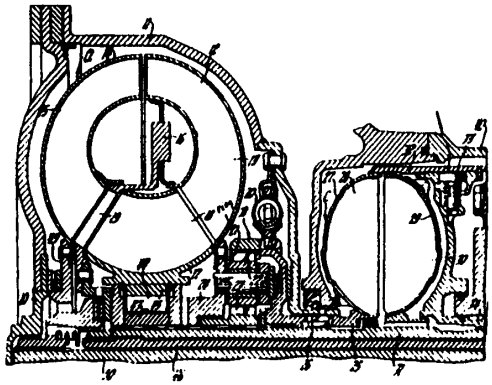

fluid volume control valve

**35 Single impeller-turbine type fluid circuit divides or combines plural power paths:**
This subclass is indented under subclass 31. Subject matter wherein the fluid torque transmitting means comprises at least three coaxial bladed elements forming a fluid filled torus, said elements being mechanically connected in power transmitting relationship to other parts of the drive train*.

(1) Note. Normally the circuit includes an input element, or pump, and two or more output elements, or turbines. There may be additionally included one or more reaction elements, or stators, which function to redirect or guide the fluid within the circuit and thus change the transmitted torque, or a turbine may fulfill the function of both turbine and stator.

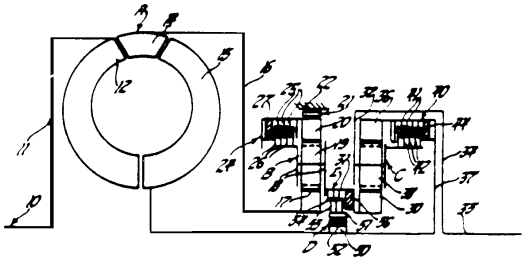

input; output

**36 Planetary gearing divides paths:**
This subclass is indented under subclass 35. Subject matter wherein the planetary transmission includes a planetary gear set made up of at least three elements, one of said elements being directly connected to an input member* but rotatable relative to all elements of the fluid torque transmitting means, and each of the other two elements constituting a power path within the drive train.*

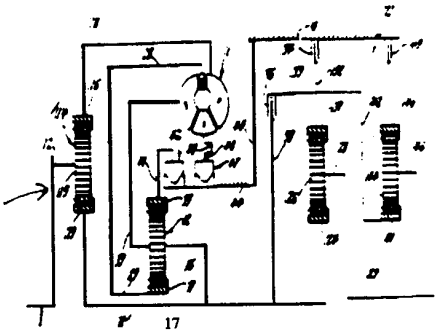

carrier divides path



U.S. Well - Exhibit 2026
Liberty v. U.S. Well - IPR2025-00778
Page 13 of 70

**37 Three fluid outputs:**
This subclass is indented under subclass 35. Subject matter wherein the fluid torque transmitting means includes at least three coaxial bladed elements each of which provides a mechanical power output to the drive train*.

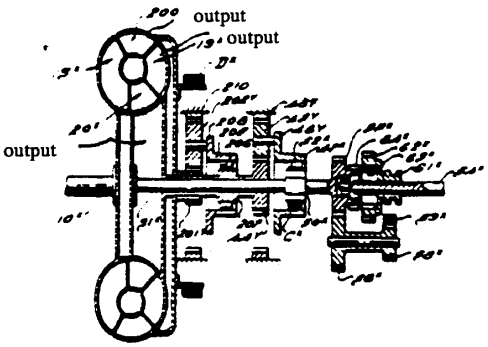


output; output; output

**38 And stator:**
This subclass is indented under subclass 37. Subject matter wherein the fluid torque transmitting means includes a fourth coaxial bladed element which is stationary during at least one mode of operation as it acts to guide or redirect the fluid within the torque transmitting means.

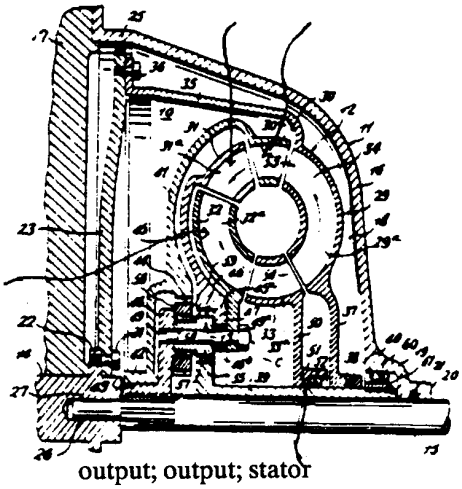


output; output; stator

**39 Two fluid outputs and stator:**
This subclass is indented under subclass 35. Subject matter wherein the fluid torque transmitting means includes four coaxial bladed elements, a first input element, two power output elements and a fourth reaction element, stationary during at least one mode of operation, which acts to guide or redirect the fluid within the torque transmitting means.

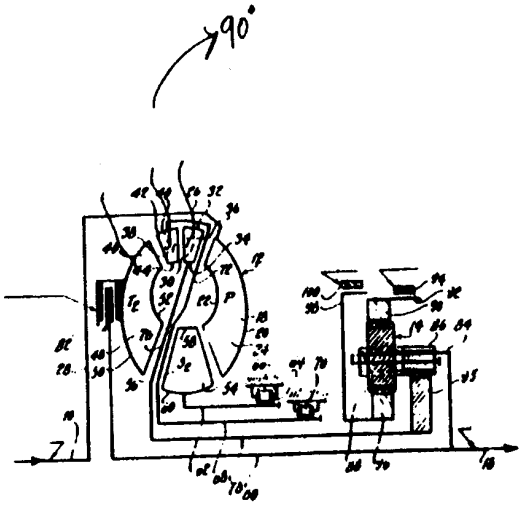


output; stator; output; forward clutch; input; low band; reverse band; output

**40 With variable fluid drive control:**
This subclass is indented under subclass 39. Subject matter wherein means are provided to change the path of the fluid within the torque transmitting means.

(1) Note. This is usually accomplished by changing the angle or position of one of the blade elements.



U.S. Well - Exhibit 2026
Liberty v. U.S. Well - IPR2025-00778
Page 14 of 70

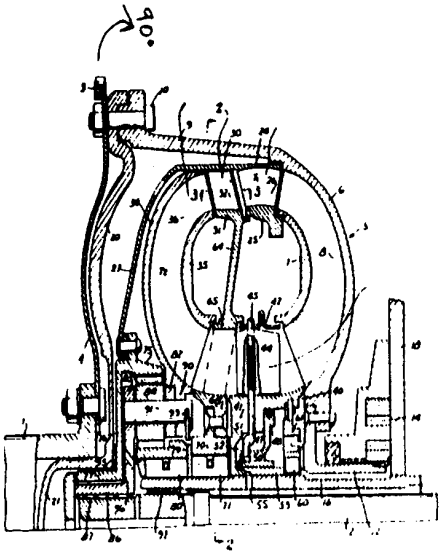

output; stator; output; vane control

**41 And mechanical drive path:**
This subclass is indented under subclass 39. Subject matter wherein in addition to the two outputs from the fluid torque transmitting means a third power path is mechanically connected to the input member*, by-passing the fluid circuit.

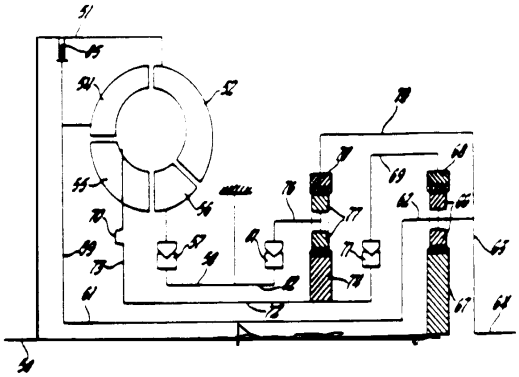

input; output

**42 Control of or by fluid drive:**
This subclass is indented under subclass 35. Subject matter wherein means is provided to regulate the operation of the fluid torque transmitting means or to affect the operation of a mechanical drive train* in response to a condition of the fluid torque transmitting means.

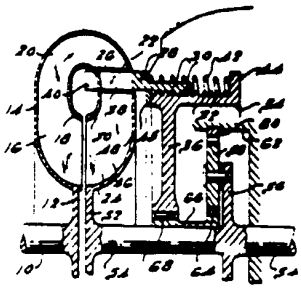

fluid control

SEE OR SEARCH THIS CLASS, SUBCLASS:
61+, for related art and see the notes thereunder.

**43 With speed or torque responsive clutch or brake control:**
This subclass is indented under subclass 35. Subject matter wherein the drive train* is controlled by a clutch* or brake* which operates in response to the velocity or resistance to rotary movement of a transmission part.

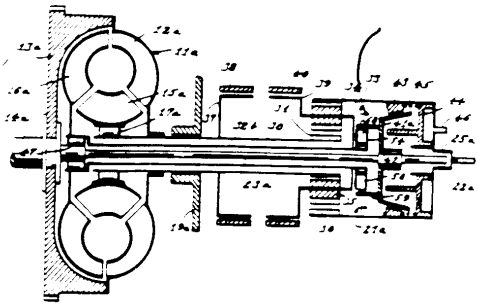

centrifugal control

SEE OR SEARCH THIS CLASS, SUBCLASS:
254+, for other speed or torque responsive transmission controls.



U.S. Well - Exhibit 2026
Liberty v. U.S. Well - IPR2025-00778
Page 15 of 70

**44 Stator rotatable in reverse direction to provide drive:**

This subclass is indented under subclass 35. Subject matter wherein one of the coaxial bladed elements functions as a reaction member to modify the speed and direction of the fluid in the torque transmitting means in one mode of operation and also functions, when rotating in a direction opposite to an input element, of the fluid torque transmitting means to add torque to the drive train.

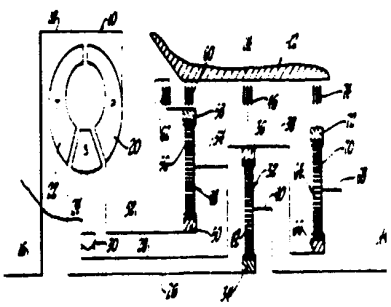

under high load condition stator rotated in reverse direction

**45 Turbine braked, stator provides reverse drive:**

This subclass is indented under subclass 44. Subject matter wherein the reverse rotation of the stator is enabled by braking a turbine and the transmitted force results in a reverse drive of a load device*.

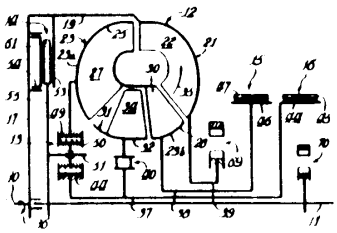

turbine brake

**46 And adds torque in forward drive:**

This subclass is indented under subclass 45. Subject Matter wherein in addition to its function as both reaction element and reverse drive output element, in one mode of operation, the stators` rotary force is transmitted to the load device* in the same direction as the input element.

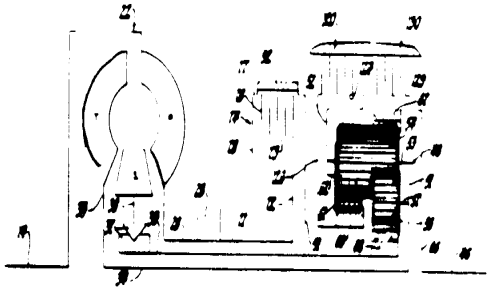

**47 Impeller-turbine type fluid circuit and mechanical path in parallel:**

This subclass is indented under subclass 31. Subject matter wherein the fluid torque transmitting means includes at least two coaxial bladed element forming a fluid filled torus, one functioning as an input element and the other as an output element and a separate mechanical drive train* is provided, by-passing the fluid torque transmitting means.

(1) Note. A mere lock-up clutch* which connects the input and output elements of the fluid unit together is not here but in subclasses 59+.

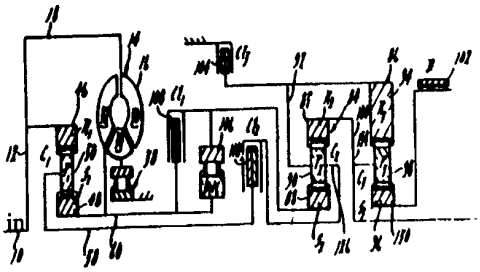

out

SEE OR SEARCH THIS CLASS, SUBCLASS:

35+, especially subclass 41, for a fluid drive and mechanical drive in parallel



U.S. Well - Exhibit 2026
Liberty v. U.S. Well - IPR2025-00778
Page 16 of 70

where, in addition, the fluid unit has either two inputs or two outputs.

329+, for other plural power path transmissions and see the notes thereunder.

**48 With control of or by the fluid circuit:**

This subclass is indented under subclass 47. Subject matter wherein means is provided to regulate the operation of the mechanical drive train* in response to a condition of the fluid torque transmitting means.

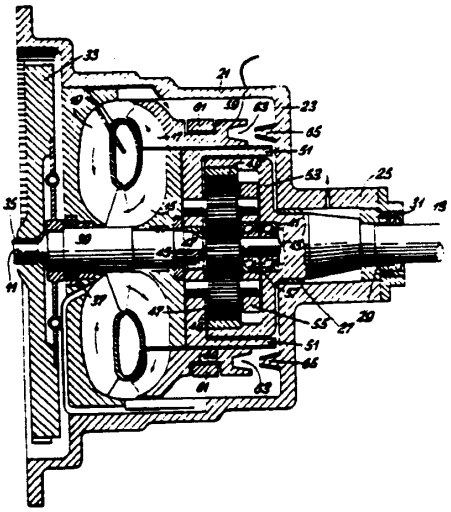

turbine movable by 61

SEE OR SEARCH THIS CLASS, SUBCLASS:

61+, for related art and see the notes thereunder.

**49 Gearing controlled by fluid circuit condition:**

This subclass is indented under subclass 48. Subject matter wherein means is provided to affect the mechanical drive train* in response to a condition of the fluid torque transmitting means.

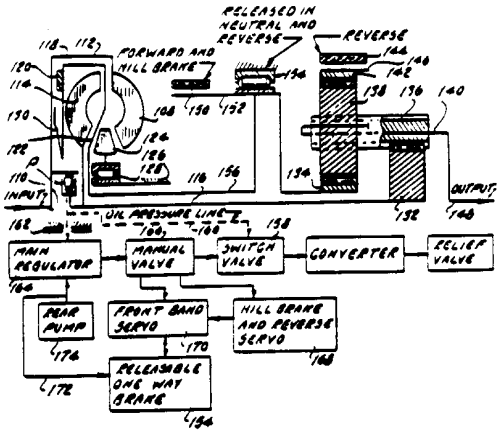


**50 Fill and empty type fluid circuit:**

This subclass is indented under subclass 48. Subject matter wherein the operation of the fluid torque transmitting means is regulated by controlling the amount of fluid contained therein.

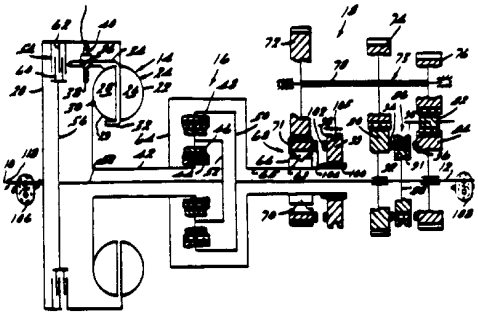

fill and empty valve

**51 With speed responsive control:**

This subclass is indented under subclass 47. Subject matter wherein means is provided to regulate the operation of the drive train* dependent on the velocity of a part thereof.



U.S. Well - Exhibit 2026
Liberty v. U.S. Well - IPR2025-00778
Page 17 of 70

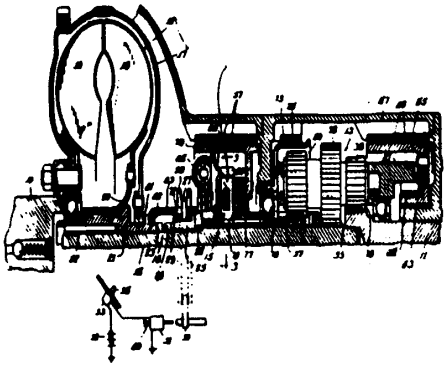

centrifugal control

SEE OR SEARCH THIS CLASS, SUBCLASS:

254+, for other speed responsive controls and see the notes therein.

**52 And nonplanetary gearing:**

This subclass is indented under subclass 47. Subject matter wherein in addition to the fluid torque transmitting means and planetary transmission the drive train includes gearing of a type not falling under the class definition.

(1) Note. The additional gearing may be either variable or single speed.

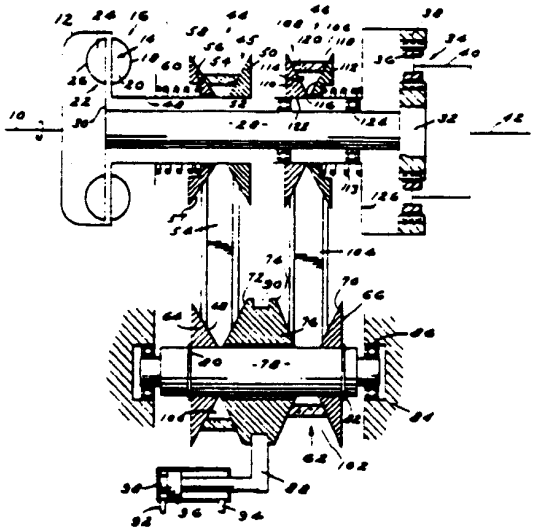

SEE OR SEARCH THIS CLASS, SUBCLASS:

66, 198, 207, 225, 302, and 343, for other combinations of planetary and nonplanetary gearing.

**53 Planetary gearing divides paths:**

This subclass is indented under subclass 47. Subject matter wherein gearing under the class definition is before the fluid torque transmitting means in the path of power transmission and is effective to split such path into parallel fluid and mechanical paths, an input element of said gearing being rotatable relative to all elements of said fluid torque transmitting means.

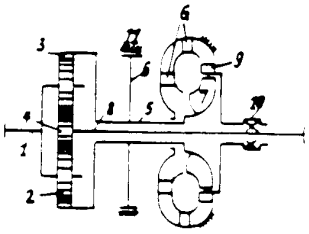

**54 Sun, orbit and carrier braked:**

This subclass is indented under subclass 47. Subject matter wherein the planetary transmission is controlled by the braking of a sun gear*, an orbit gear* and a planet carrier*.

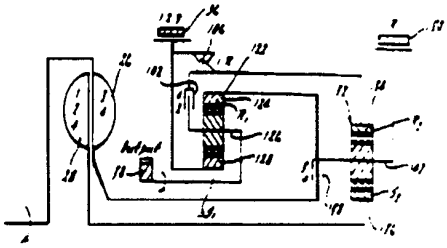

input

SEE OR SEARCH THIS CLASS, SUBCLASS:

276, and 280+, for a similar planetary transmission without a fluid drive.



U.S. Well - Exhibit 2026
Liberty v. U.S. Well - IPR2025-00778
Page 18 of 70

**55 Sun and orbit braked:**

This subclass is indented under subclass 47. Subject matter wherein the planetary transmission is controlled by the braking of a sun gear* and an orbit gear*.

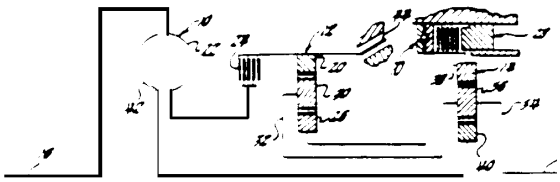

SEE OR SEARCH THIS CLASS, SUBCLASS:

277, 279 and 282+, for a similar planetary transmission without a fluid drive.

**56 Sun and carrier braked:**

This subclass is indented under subclass 47. Subject matter wherein the planetary transmission is controlled by the braking of a sun gear* and a planet carrier*.

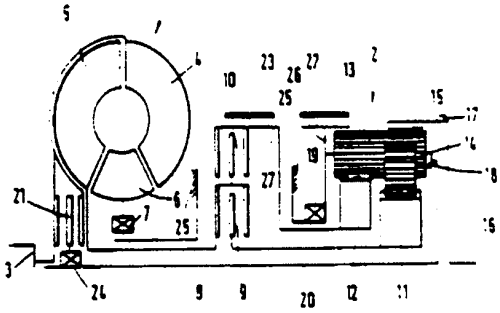

SEE OR SEARCH THIS CLASS, SUBCLASS:

278, and 284+, for a similar planetary transmission without a fluid drive.

**57 Orbit and carrier braked:**

This subclass is indented under subclass 47. Subject matter wherein the planetary transmission is controlled by the braking of an orbit gear* and a planet carrier*.

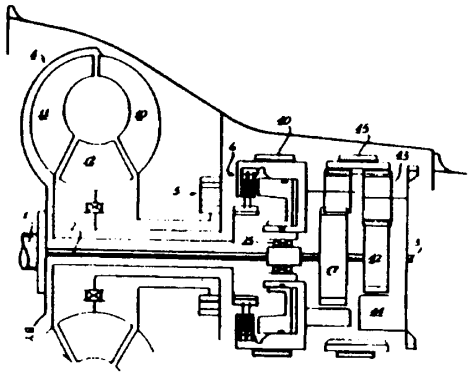

SEE OR SEARCH THIS CLASS, SUBCLASS:

279, and 286+, for a similar planetary transmission without a fluid drive.

**58 Orbits braked:**

This subclass is indented under subclass 47. Subject matter wherein the planetary transmission is controlled by the braking of plural orbit gears*.

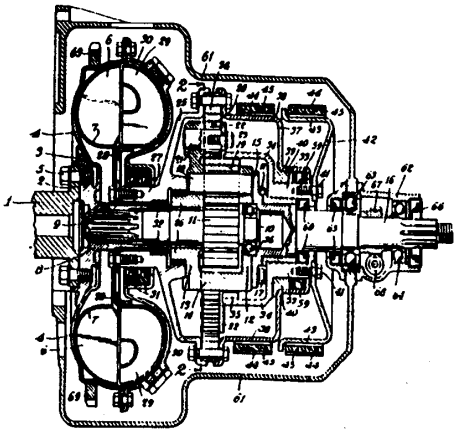

SEE OR SEARCH THIS CLASS, SUBCLASS:

279, and 290+, for a similar planetary transmission without a fluid drive.



U.S. Well - Exhibit 2026
Liberty v. U.S. Well - IPR2025-00778
Page 19 of 70

**59 Impeller-turbine type fluid circuit in series with planetary gearing:**
This subclass is indented under subclass 31. Subject matter wherein the fluid torque transmitting means comprises a plurality of coaxial bladed elements forming a fluid filled torus having an input and an output, and only a single power path extends between said fluid drive and the planetary gearing.

(1) Note. The fluid drive may include a lock-up clutch.

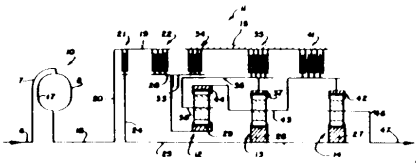

**60 And condition responsive control:**
This subclass is indented under subclass 59. Subject matter wherein means is provided to regulate the operation of the drive train* and such means is condition responsive*.

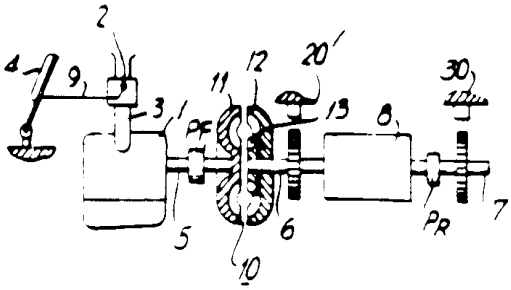

speed sensor

SEE OR SEARCH THIS CLASS, SUBCLASS:
254+, for related subject matter and see the notes thereunder.

**61 Control of or by fluid circuit:**
This subclass is indented under subclass 60. Subject matter wherein said means regulates the operation of the fluid torque transmitting means, or affects the operation of the mechanical drive train* in response to a condition of the fluid torque transmitting means.

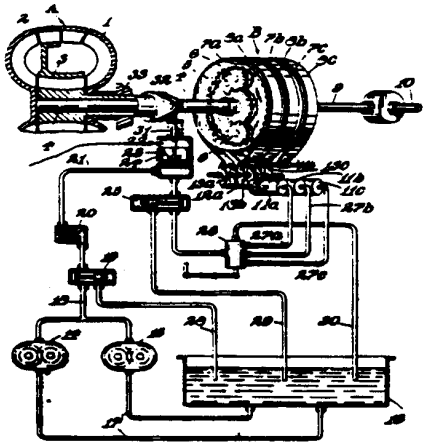

stator torque affects fluid pressure

SEE OR SEARCH THIS CLASS, SUBCLASS:
42, and 48+, for related art.

SEE OR SEARCH CLASS:
477, Interrelated Power Delivery Controls, Including Engine Control, subclass 61 for this combination and a motor control.

**62 Controls responsive to relative impeller and turbine speeds:**
This subclass is indented under subclass 61. Subject matter wherein the difference in velocities of the input and output of the fluid torque transmitting means regulate the operation of the drive train*.

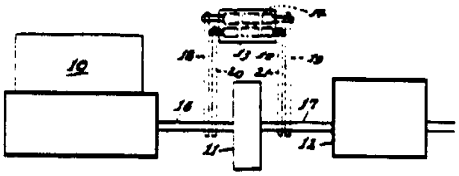

speed ratio governor; engine; power shift gear transmission; hydraulic torque converter



U.S. Well - Exhibit 2026
Liberty v. U.S. Well - IPR2025-00778
Page 20 of 70

SEE OR SEARCH CLASS:

477, Interrelated Power Delivery Controls, Including Engine Control, subclass 61 for this combination and a motor control.

**63 System or servo fluid pressure controlled:**

This subclass is indented under subclass 62. Subject matter wherein the relative input and output speeds of the fluid torque transmitting means affect or regulate a fluid control pressure.

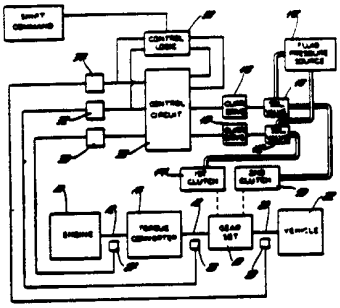

**64 Fluid circuit controlled:**

This subclass is indented under subclass 61. Subject matter wherein the condition responsive* means controls the fluid torque transmitting means.

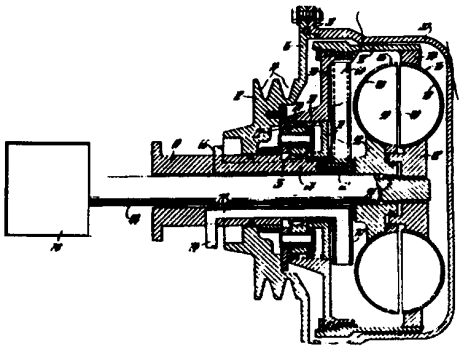

compressor; volume of fluid controlled

**65 By lock-up clutch actuation:**

This subclass is indented under subclass 64. Subject matter wherein the fluid torque transmitting means is controlled by mechanically connecting the input and output thereof.

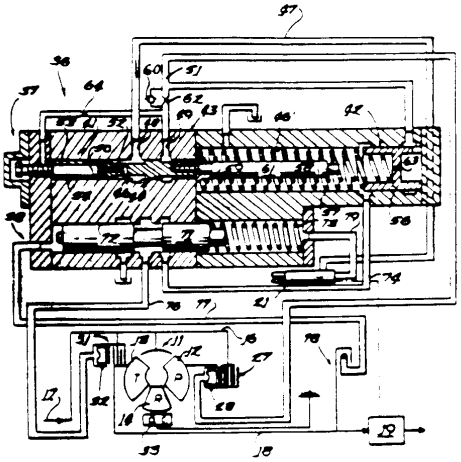

SEE OR SEARCH CLASS:

192, Clutches and Power-Stop Control, subclasses 3.21+ for the combination of impeller-turbine type fluid drive and clutch in the absence of a gear transmission.

**66 And nonplanetary gearing:**

This subclass is indented under subclass 59. Subject matter wherein in addition to the fluid torque transmitting means and planetary transmission the drive train* includes gearing of a type not falling under the class definition.

(1) Note. Where the nonplanetary gearing forms a power path between the combination of subclass 59 and a differential* the patent has been placed in subclass 71.

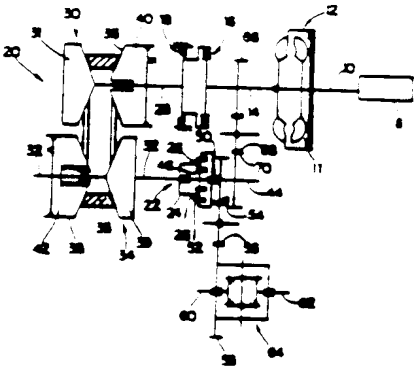



U.S. Well - Exhibit 2026
Liberty v. U.S. Well - IPR2025-00778
Page 21 of 70

SEE OR SEARCH THIS CLASS, SUBCLASS:

52, 198+, 207+, 225, 302, and 343, for other combinations of planetary and nonplanetary gearing.

**67 With synchronizing of positive clutch or brake:**

This subclass is indented under subclass 59. Subject matter wherein the two parts of a clutch* or a brake* are provided with toothed surfaces which intermesh when engaged and means is provided to reduce the relative movement between the two parts before such engagement to reduce the impact of engagement.

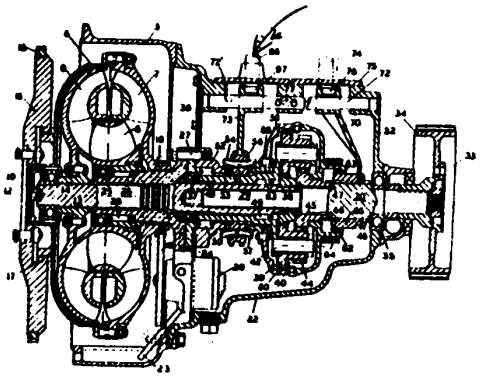

synchronizer

SEE OR SEARCH THIS CLASS, SUBCLASS:

139, and 303, for clutch or brake synchronizers in other planetary transmissions.

SEE OR SEARCH CLASS:

74, Machine Element or Mechanism, subclasses 339+ for meshing assisters together with nonplanetary gearing.

192, Clutches and Power-Stop Control, subclasses 53.1+ for frictional synchronizing of positive clutches.

**68 With nonratio brake:**

This subclass is indented under subclass 59. Subject matter combined with a brake* which is utilized for a purpose other than effecting a particular speed ratio* in a planetary transmission.

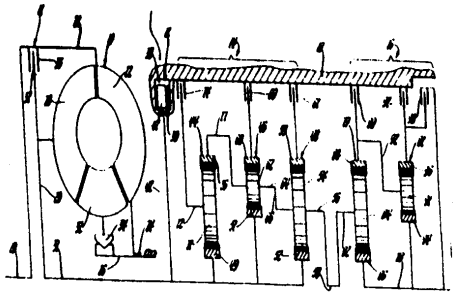

fluid brake to slow down turbine

SEE OR SEARCH THIS CLASS, SUBCLASS:

18+, and 224, for brakes utilized in steering by driving.

113, 175, 293, and 900, for other nonratio brake combinations.

SEE OR SEARCH CLASS:

74, Machine Element or Mechanism, subclass 888 for a nonratio brake together with a prime mover control.

192, Clutches and Power-Stop Control, subclasses 215+ for the combination of transmission control and brake.

**69 Fluid circuit controlled:**

This subclass is indented under subclass 59. Subject matter wherein the operation of the fluid torque transmitting means is regulated.



U.S. Well - Exhibit 2026
Liberty v. U.S. Well - IPR2025-00778
Page 22 of 70

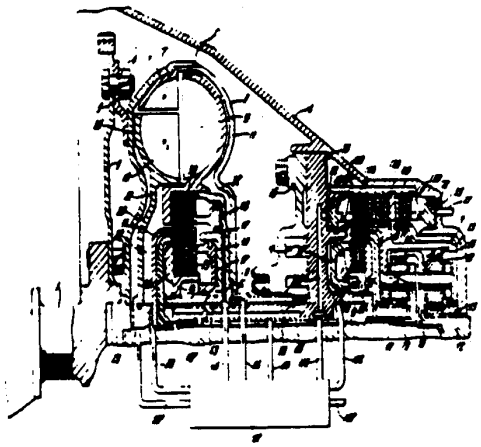

2nd pump can be engaged for greater capacity; transmission controls

**70 Pressure controlled:**
This subclass is indented under subclass 69. Subject matter wherein the fluid torque transmitting means is regulated by controlling the pressure within said means.

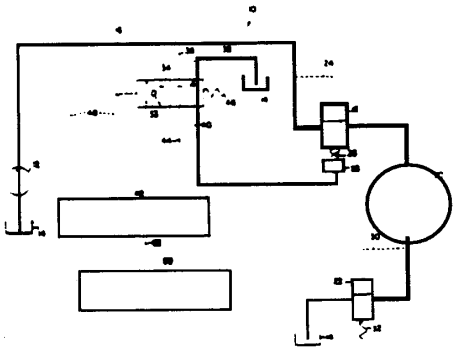

powershift transmission control valve; powershift transmission control elements; torque converter

**71 And differential in series:**
This subclass is indented under subclass 59. Subject matter wherein a power path extends between the device of said subclass and a differential transmission*.

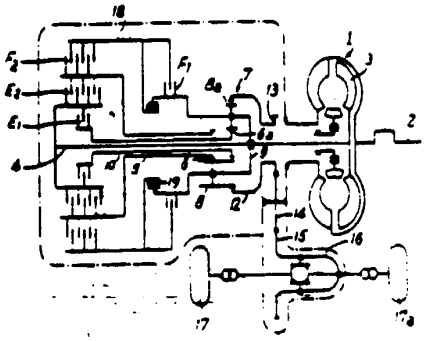

SEE OR SEARCH THIS CLASS, SUBCLASS:
198+, for this combination without an impeller-turbine type fluid drive in series.

**72 Fluid pump and motor in one of plural paths to or from planetary gearing:**
This subclass is indented under subclass 31. Subject matter wherein the drive train* consists of a transmission under the class definition having two power paths, one of which is a fluid torque transmitting drive comprising means to pressurize a fluid and means responsive to such pressure to convert such pressure to useful mechanical work.

SEE OR SEARCH THIS CLASS, SUBCLASS:
23+, for this type of drive used for steering by driving.
329+, for other plural power path transmissions and see the notes thereunder.

SEE OR SEARCH CLASS:
60, Power Plants, subclasses 325+ for pump and motor combinations per se.
477, Interrelated Power Delivery Controls, Including Engine Control, subclass 52 for this combination together with prime mover control.



U.S. Well - Exhibit 2026
Liberty v. U.S. Well - IPR2025-00778
Page 23 of 70

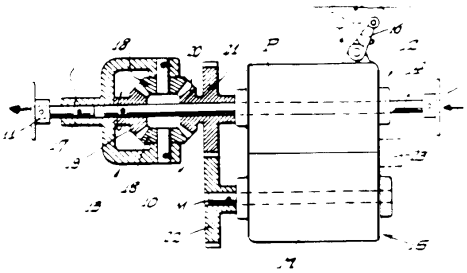

output; pump; input; motor

**73 Plural fluid power paths to planetary gearing:**
This subclass is indented under subclass 72. Subject matter wherein the plural power paths are each input paths to the planetary gearing and each input path consists of a fluid drive.

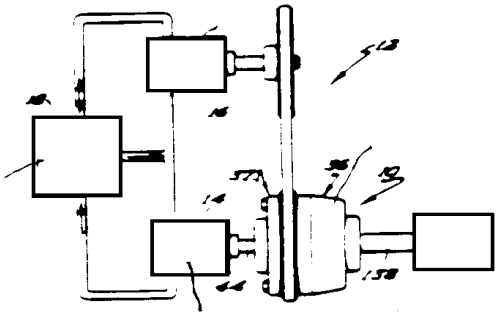

motor; pump; planetary gearing; load; motor

**74 Plural outputs:**
This subclass is indented under subclass 72. Subject matter wherein the drive train* includes means to drive two load devices*.

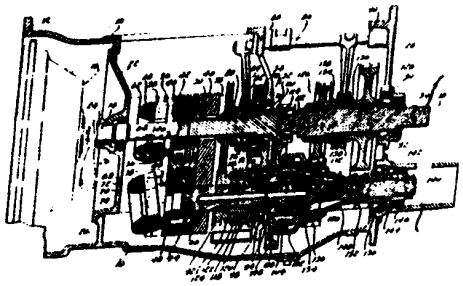

output; output

SEE OR SEARCH THIS CLASS, SUBCLASS:
18+, for plural outputs in a steering by driving combination.
332, for other plural output transmissions and see the notes therein.

inverting means are utilized for transferring torque in the drive train*.

**76 Speed responsive control:**
This subclass is indented under subclass 72. Subject matter wherein means is provided to regulate the operation of the drive train* dependent on the velocity of a part thereof.

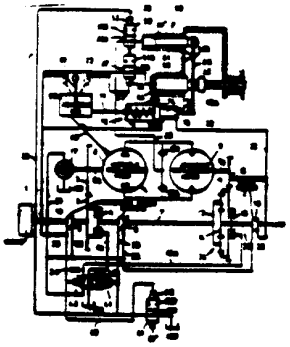

SEE OR SEARCH THIS CLASS, SUBCLASS:
254+, for related subject matter and see the notes there under.

**77 Constant speed output:**
This subclass is indented under subclass 76. Subject matter wherein the regulation is such that the load device* rotates at a constant velocity.



U.S. Well - Exhibit 2026
Liberty v. U.S. Well - IPR2025-00778
Page 24 of 70

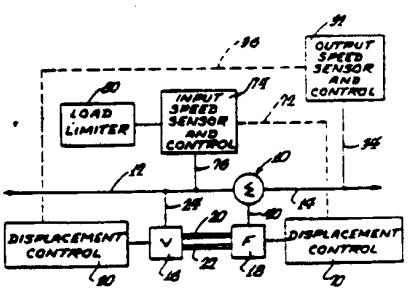


planetary gear

**78 Interrelated fluid unit and gear control:**
This subclass is indented under subclass 72. Subject matter wherein means are provided to regulate the operation of the fluid drive and planetary transmission and such regulation is interdependent or operated by a common control.

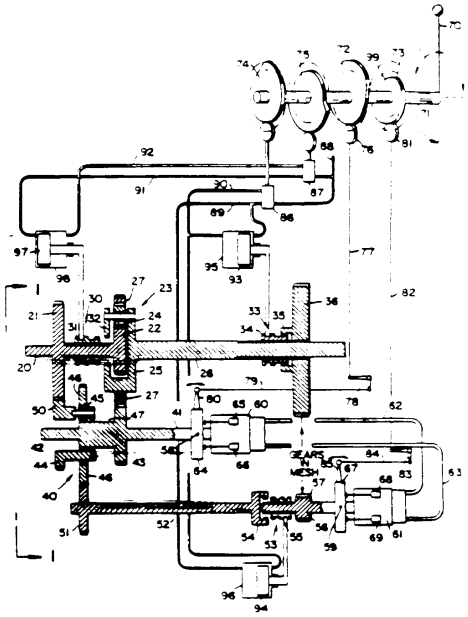

forward; reverse

**79 With constant speed ratio between input and one fluid unit:**
This subclass is indented under subclass 78. Subject matter wherein an input member* has a constant speed ratio* with an input of the fluid drive in all conditions of operation.

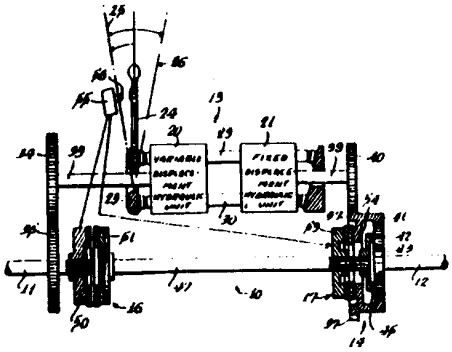

input; output

**80 Plural speed ranges:**
This subclass is indented under subclass 72. Subject matter wherein the fluid drive provides a stepless speed ratio* variation capability and wherein a speed ratio* of a planetary transmission is also variable to result in the stepless variation at a plurality of speed ratio* levels.

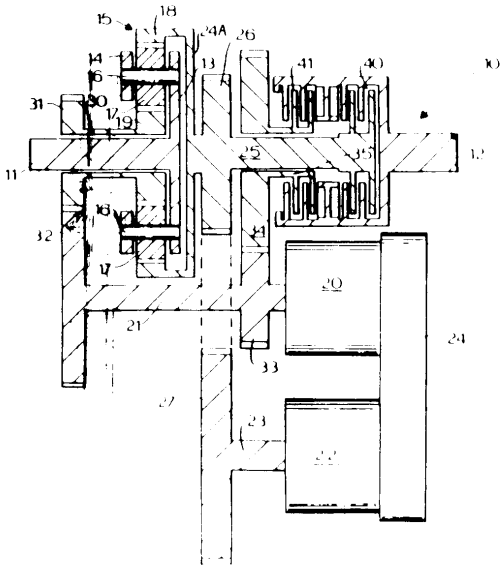

**81 With constant speed ratio between input and one fluid unit:**
This subclass is indented under subclass 80. Subject matter wherein an input member* has a constant speed ratio* with the fluid drive in all conditions of operation.



U.S. Well - Exhibit 2026
Liberty v. U.S. Well - IPR2025-00778
Page 25 of 70

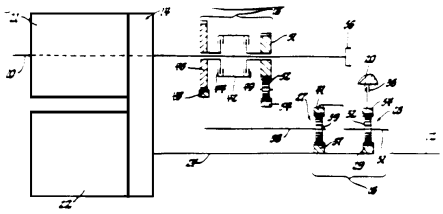

pump; motor

**82 Having single planet carrier:**
This subclass is indented under subclass 81. Subject matter wherein the planetary transmission includes but one planet carrier*.

(1) Note. A Planet carrier* may include more than one set of planet pinions* mounted thereon as long as the carrier is unitary.

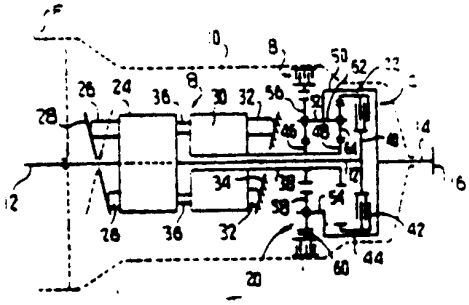

**83 Pump and motor in series with planetary gearing:**
This subclass is indented under subclass 31. Subject matter wherein a means to pressurize a fluid and means responsive to such pressure to convert such pressure to useful mechanical work is placed in tandem with a transmission under the class definition and a single power path extends there between.

(1) Note. The claiming of a pump is not necessary for placement herein.

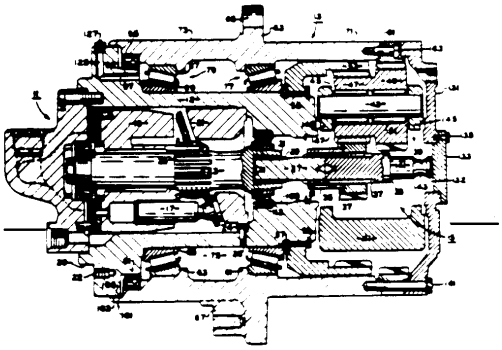

inboard **;** outboard

SEE OR SEARCH CLASS:
91, Motors: Expansible Chamber Type, subclass 55 for related art and see the notes thereunder.
180, Motor Vehicles, subclasses 305+ for this transmission combined with significant vehicle structure.

**84 Control of differential planetary gearing:**
This subclass is indented under subclass 31. Subject matter wherein the operation of a differential transmission* is regulated by fluid means.

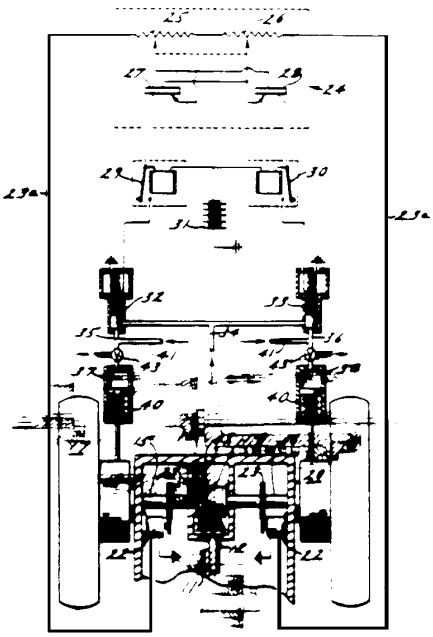



U.S. Well - Exhibit 2026
Liberty v. U.S. Well - IPR2025-00778
Page 26 of 70

SEE OR SEARCH THIS CLASS, SUBCLASS:
220+, for differential transmissions,* per se.

**85 Special fluid:**
This subclass is indented under subclass 84. Subject matter wherein significance is attributed to the type of fluid, or the physical characteristics thereof, used to control the differential transmission*.

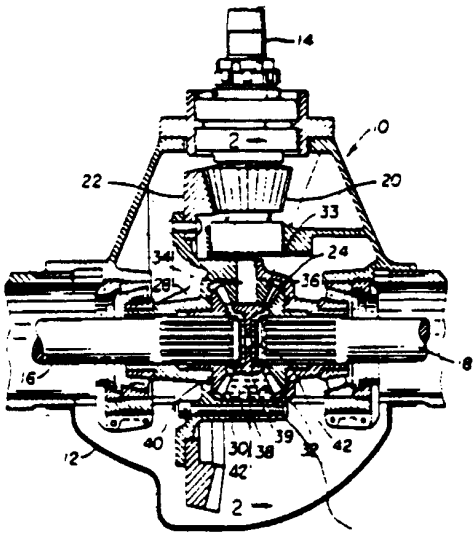

fluid is silicone polymer

SEE OR SEARCH THIS CLASS, SUBCLASS:
160, for a fluid which is used to lubricate a differential.

**86 By fluid operated mechanical clutch:**
This subclass is indented under subclass 84. Subject matter wherein the differential is controlled by a fluid actuated mechanical clutch*.

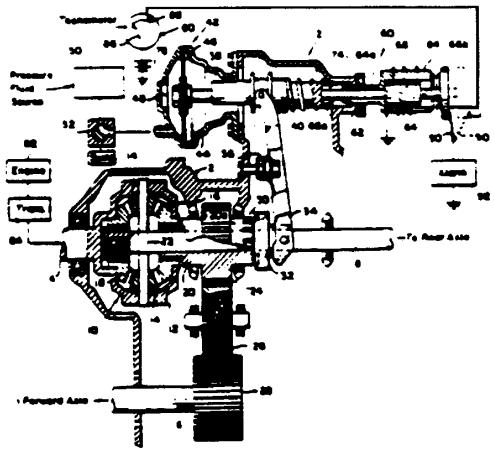

**87 Operated by viscous drag:**
This subclass is indented under subclass 86. Subject matter wherein the mechanical clutch* is controlled by the retarding force transmitted between two relatively rotating parts by a fluid medium.

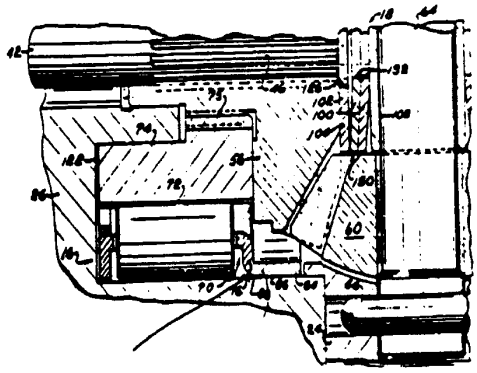

Viscus Drag between 76 & 86 engages one-way clutch

**88 Operated by a pump responsive to differential action:**
This subclass is indented under subclass 86. Subject matter wherein the mechanical clutch is controlled by fluid from a pressure source, such source being activated in response to relative rotation of the outputs of the differential transmission*.



U.S. Well - Exhibit 2026
Liberty v. U.S. Well - IPR2025-00778
Page 27 of 70

**89 Fluid resistance controls relative rotation of outputs:**

This subclass is indented under subclass 84. Subject matter wherein fluid in contact with relatively rotatable parts of the differential transmission* is effective to retard such relative rotation.

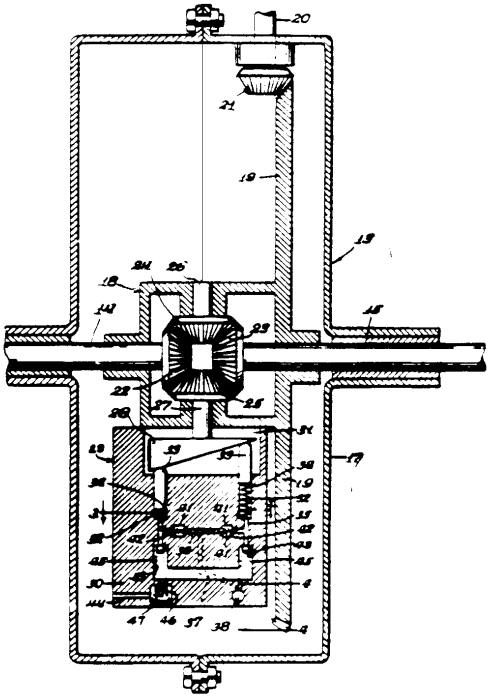

**90 Fluid pumped by differential gears:**

This subclass is indented under subclass 89. Subject matter wherein the gears of the differential transmission* act as pumps, to pressurize a fluid contained therein, the resistance to flow of such fluid acting to retard relative rotation of the differential outputs.

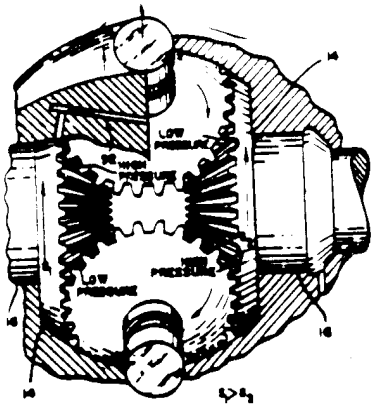

**91 Fluid resistance inhibits relative rotation:**

This subclass is indented under subclass 31. Subject matter wherein either the weight or momentum of a fluid mass or a fluids resistance to flow, is effective to retard the rotation of an element of a planetary transmission.

(1) Note. Both the subclasses hereunder and Class 192, Clutches and Power-Stop Control, subclass 61 contain planetary units including gear pumps so arranged that when fluid flow through the pump is unrestricted the unit slips, and as fluid flow is restricted relative rotation of the planetary elements is inhibited. Where the planet pinion of the unit drives a separate gear pump the art is found herein but where the planet pinion and cooperating sun and orbit together constitute the gear pump the art will be found in Class 192, subclass 61.



U.S. Well - Exhibit 2026
Liberty v. U.S. Well - IPR2025-00778
Page 28 of 70

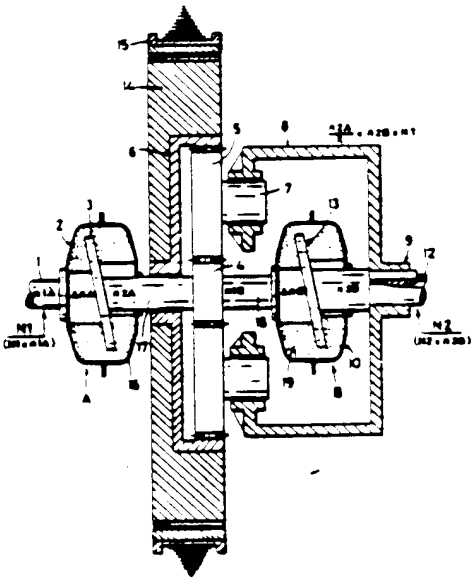

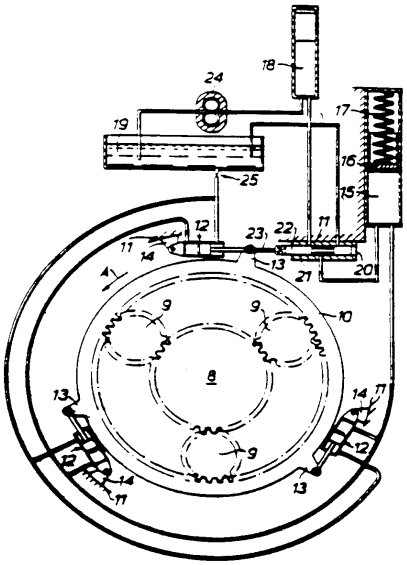

fluid buffer for orbit

SEE OR SEARCH THIS CLASS, SUBCLASS:

89, for control of a differential transmission* by fluid resistance.

SEE OR SEARCH CLASS:

188, Brakes, subclasses 266+ for internal resistance motion retarders, per se.

**92 Fluid damper for reaction element:**

This subclass is indented under subclass 91. Subject matter wherein a liquid or gas medium resists movement of an otherwise stationary planetary gear member.

**93 Valve inhibits fluid flow:**

This subclass is indented under subclass 91. Subject matter wherein the resistance to fluid flow is controlled by a passage way that is opened to a variable degree.

**94 Speed or torque responsive valve control:**

This subclass is indented under subclass 93. Subject matter wherein the variable opening of the valve is regulated by either the velocity or the resistance to rotary movement of a transmission part.

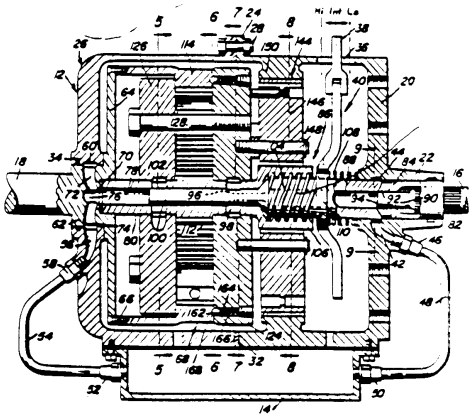

torque responsive to move valve 100



U.S. Well - Exhibit 2026
Liberty v. U.S. Well - IPR2025-00778
Page 29 of 70

**95 Centrifugally actuated valve controls fluid clutch:**

This subclass is indented under subclass 94. Subject matter wherein the valve is regulated by the speed of an element of the transmission as measured by centrifugal force and such regulation is effective to retard the rotation of one rotary element of a transmission with respect to another rotary element thereof.

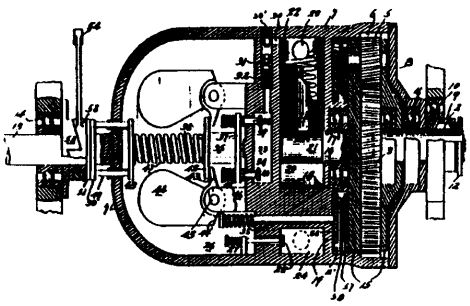

**96 Clutch connects planet pinion and carrier:**

This subclass is indented under subclass 95. Subject matter wherein the said one rotary element is a planet pinion* and the said another rotary element is a planet carrier*.

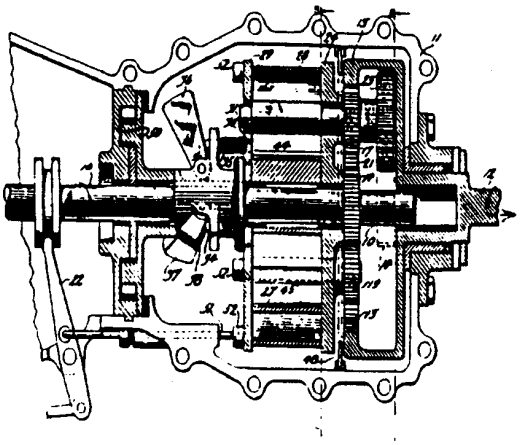

**97 With fluid brake control:**

This subclass is indented under subclass 95. Subject matter wherein in addition to the clutch control means, resistance to fluid flow is utilized to retard the rotation of a planetary element with respect to a stationary element.

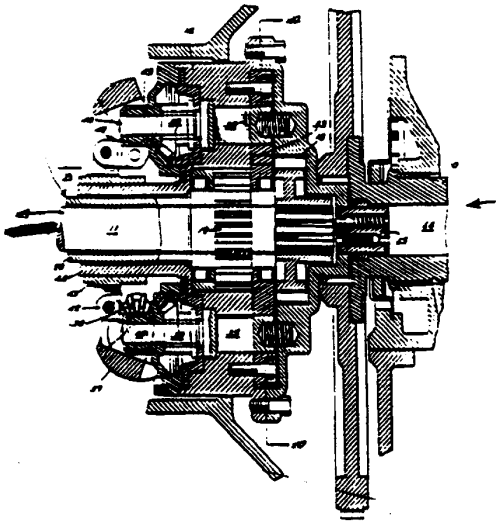

centrifugal weight 37 closes valve 35 of clutch; fluid brake 26, 27 stops this shaft; output; input

**98 Centrifugally actuated valve controls fluid brake:**

This subclass is indented under subclass 94. Subject matter wherein the valve is regulated by the speed of an element of a transmission as measured by centrifugal force and such regulation is effective to retard the rotation of an element of the planetary transmission with respect to a stationary element.

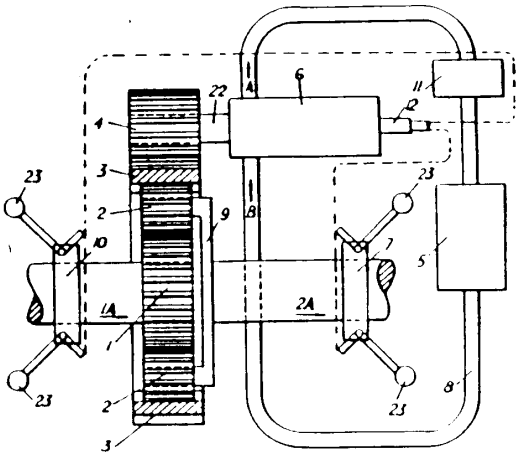



U.S. Well - Exhibit 2026
Liberty v. U.S. Well - IPR2025-00778
Page 30 of 70

**99 Interrelated valve control and mechanical clutch or brake:**
This subclass is indented under subclass 93. Subject matter wherein there is provided means to regulate a valve, which is effective to retard an element of a planetary transmission, and means to operate a mechanical clutch* or brake*, the operation of one of said means affecting the other, or said means being a common means.

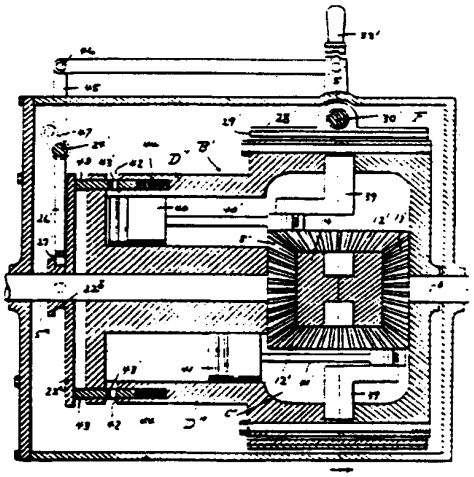

**100 Valve control and mechanical clutch:**
This subclass is indented under subclass 99. Subject matter wherein the operation of the valve is related to the operation of a mechanical clutch*.

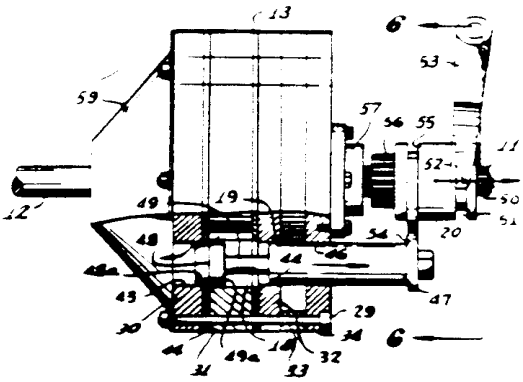

**101 Pump pressure engages mechanical clutch:**
This subclass is indented under subclass 100. Subject matter wherein the valve controls the outlet of a fluid pressurizing device which in turn retards rotation of a planetary element and the pressurized fluid provides the force to engage a mechanical clutch*.

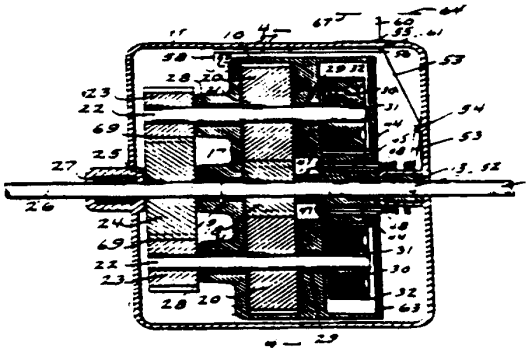

**102 Fluid brake(s) for plural planetary elements:**
This subclass is indented under subclass 93. Subject matter wherein a valve controls the fluid flow from a pump which, in turn, retards the rotation of two elements of a planetary transmission with relation to a stationary element.

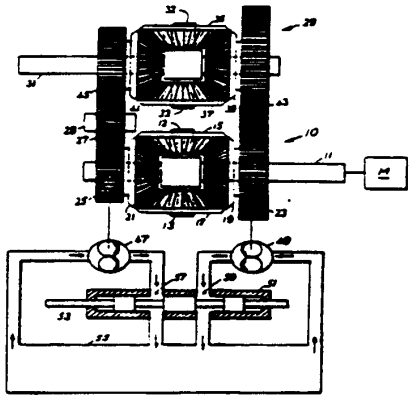



U.S. Well - Exhibit 2026
Liberty v. U.S. Well - IPR2025-00778
Page 31 of 70

**103 Plural fluid clutches:**
This subclass is indented under subclass 93. Subject matter wherein the transmission includes plural fluid clutches*.

SEE OR SEARCH CLASS:
192, Clutches and Power-Stop Control, subclass 61. See the (1) Note under subclass 91 of Class 475.

**104 Fluid brake for planetary element:**
This subclass is indented under subclass 93. Subject matter wherein the valve controls a fluid brake*.

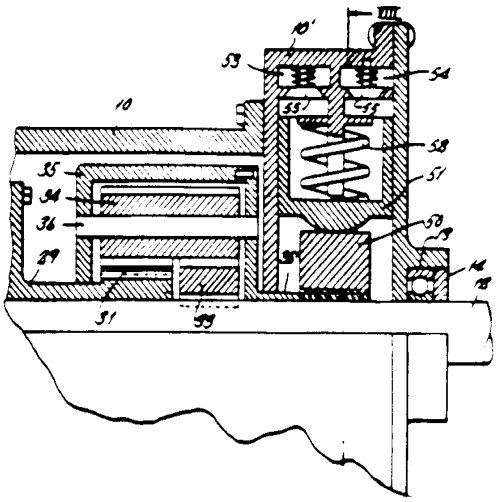

**105 And fluid clutch:**
This subclass is indented under subclass 104. Subject matter wherein there is also provided a fluid clutch*.

**106 Bevel gearing:**
This subclass is indented under subclass 104. Subject matter wherein the planetary transmission includes a planet pinion* that is a bevel gear*.

**107 Sun or orbit braked:**
This subclass is indented under subclass 104. Subject matter wherein the planetary element braked is either a sun gear* or an orbit gear*.

**108 Fluid clutch includes gear type pump:**
This subclass is indented under subclass 93. Subject matter wherein the valve is effective to restrict fluid flow from a fluid pressurizing means, said pressurizing means being operative to operate a fluid clutch* and said pressurizing means comprising interengaging rotating members.

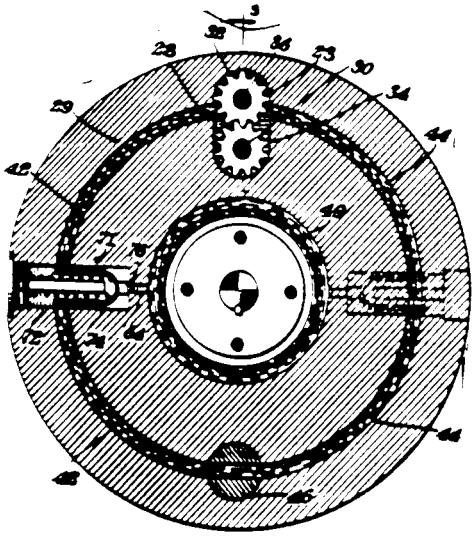

SEE OR SEARCH CLASS:
192, Clutches and Power-Stop Control, subclass 61. See the (1) Note under subclass 91 of Class 475.
418, Rotary Expansible Chamber Devices, subclasses 54+ and 191+ for gear type pumps, per se.

**109 Planet clutched to carrier:**
This subclass is indented under subclass 93. Subject matter wherein a pump is supported by a planet carrier* and is driven by a planet pinion*, the valve being effective to restrict flow from said pump.

SEE OR SEARCH THIS CLASS, SUBCLASS:
96, for this combination controlled by a speed responsive valve.



U.S. Well - Exhibit 2026
Liberty v. U.S. Well - IPR2025-00778
Page 32 of 70

**110 With reversing means:**
This subclass is indented under subclass 109. Subject matter wherein a means is also provided to change the direction of rotation of an output member*.

**111 Planet clutched to fluid flywheel:**
This subclass is indented under subclass 91. Subject matter wherein a rotatable fluid containing housing concentric with the planetary transmission surrounds vaned elements connected to planet pinions*; the housing, when rotated, forming a radially outer layer of fluid that is effective to retard the rotation of the vaned elements relative to the housing.

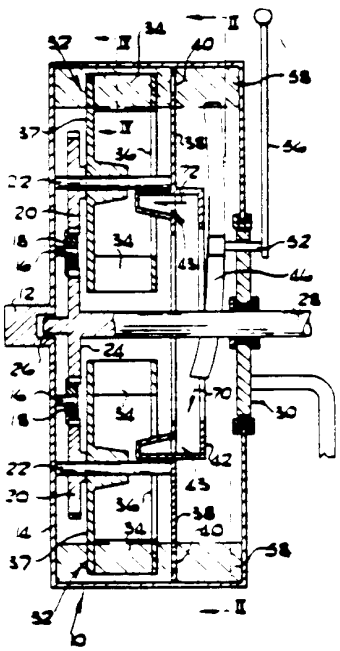

**112 Fluid container connected to planet pinion:**
This subclass is indented under subclass 91. Subject matter wherein a fluid containing housing is connected to a planet pinion*.

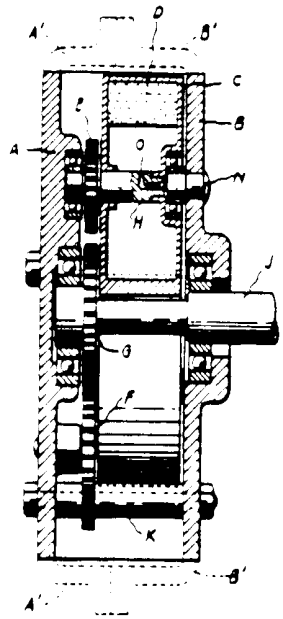

fluid

SEE OR SEARCH THIS CLASS, SUBCLASS:
255, for an eccentrically weighted planet of a nonfluid type.

**113 Impeller-turbine type fluid unit used as brake:**
This subclass is indented under subclass 91. Subject matter wherein at least two coaxial bladed elements form a fluid filled torus, one of said elements being either stationary or its motion controlled to retard another of said elements which is connected to a rotary planetary element.



U.S. Well - Exhibit 2026
Liberty v. U.S. Well - IPR2025-00778
Page 33 of 70

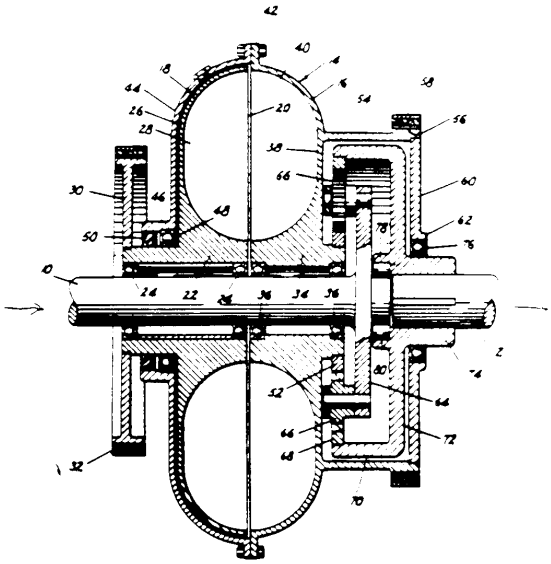

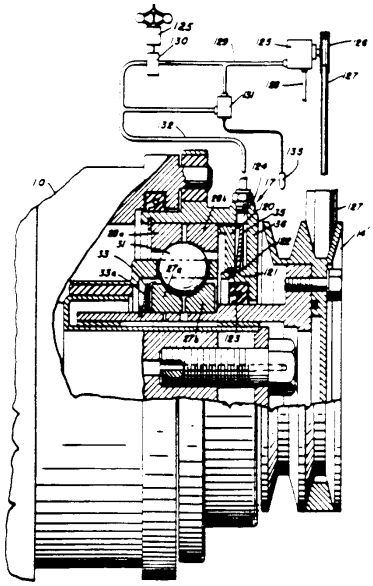

SEE OR SEARCH CLASS:

188, Brakes, subclass 296, for impeller-turbine type brakes, per se.

192, Clutches and Power-Stop Control, subclasses 215+ for related art.

477, Interrelated Power Delivery Controls, Including Engine Control, subclass 59 for hydrodynamic braking in combination with a motor control.

**114 Fluid control of friction planetary gearing:**

This subclass is indented under subclass 31. Subject matter wherein the planetary transmission that is regulated by fluid pressure includes a toothless planet pinion* capable of transmitting force by frictional contact.

**115 Stepless ratio change controlled:**

This subclass is indented under subclass 114. Subject matter wherein the planetary transmission is capable of a stepless speed ratio* change and such change is regulated by means of fluid pressure.

**116 Fluid controlled mechanical clutch or brake:**

This subclass is indented under subclass 31. Subject matter wherein a clutch* or brake* operated by fluid pressure is effective to regulate the speed ratio* of the planetary transmission.

SEE OR SEARCH THIS CLASS, SUBCLASS:

209, for an interrelated control between a planetary and nonplanetary transmission.

SEE OR SEARCH CLASS:

192, Clutches and Power-Stop Control, subclasses 3.51+ for interrelated clutch and transmission controls wherein the clutch and transmission is in series and subclasses 215+ for transmission control and brake where



U.S. Well - Exhibit 2026
Liberty v. U.S. Well - IPR2025-00778
Page 34 of 70

the brake is effective to retard the load device*.

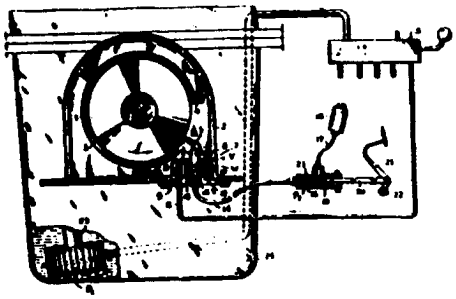

**117 Temperature responsive control:**
This subclass is indented under subclass 116. Subject matter wherein the heat level of the transmission, a portion thereof or its surroundings affects the regulation thereof.

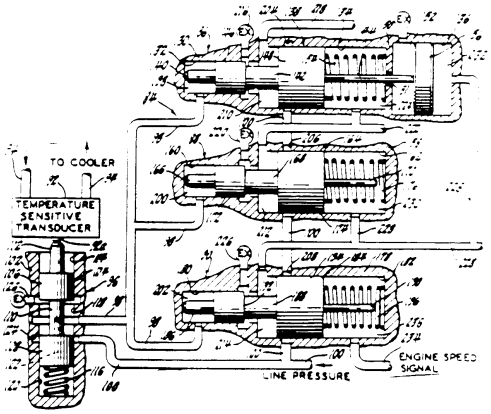


**118 Speed responsive control:**
This subclass is indented under subclass 116. Subject matter wherein velocity of a transmission part affects a control for the clutch* or brake*.

SEE OR SEARCH THIS CLASS, SUBCLASS:
254+, for other speed responsive transmission controls and see the notes thereunder.

SEE OR SEARCH CLASS:
137, Fluid Handling, subclasses 47+ for speed responsive valves, per se.
477, Interrelated Power Delivery Controls, Including Engine Control, for a prime mover control which may be combined with a speed responsive control.

**119 Safety device:**
This subclass is indented under subclass 118. Subject matter wherein the control prevents the transmission or the means driving the transmission from being damaged.

(1) Note. For example, the speed responsive means may prevent a shift valve or selector valve from shifting at too high a speed.

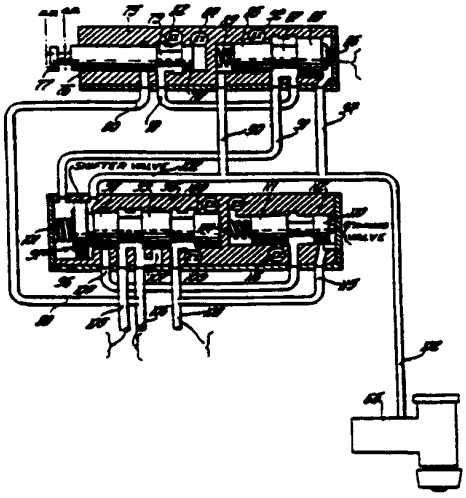

manual valve; prevents manual downshift at high speeds to direct drive clutch 60; pump pressure; to over drive brake 40; governor; governor inhibitor valve

**120 Pressure control:**
This subclass is indented under subclass 118. Subject matter wherein the control affects the force exerted by the fluid utilized to regulate the operation of the transmission.

**121 Ratio change:**
This subclass is indented under subclass 118. Subject matter wherein the control is effective to change the speed ratio* of the transmission.



U.S. Well - Exhibit 2026
Liberty v. U.S. Well - IPR2025-00778
Page 35 of 70

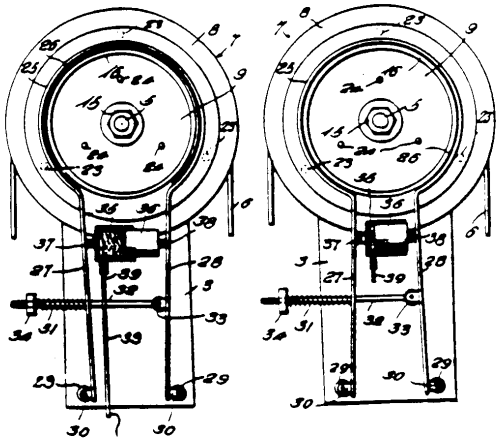

to oil pump

**122 Speed responsive valve control:**
This subclass is indented under subclass 121. Subject matter wherein the speed ratio* change is effected by a valve which is moved in response to the velocity of a transmission part.

**123 Electrical control:**
This subclass is indented under subclass 122. Subject matter wherein between the transmission part and the valve is an electrical or magnetic device.

**124 Centrifugal control:**
This subclass is indented under subclass 122. Subject matter wherein the velocity of the transmission part is sensed by a centrifugal device.

**125 Torque responsive control:**
This subclass is indented under subclass 116. Subject matter wherein force exerted to rotate a transmission part affects control of the clutch* or brake*.

SEE OR SEARCH THIS CLASS, SUBCLASS:
254+, for other torque responsive transmission controls and see the notes there under.

**126 Responsive to torque reversal:**
This subclass is indented under subclass 125. Subject matter wherein the control of the clutch* or brake* is affected by a valve and such valve is actuated responsive to a change in direction of rotation or relative rotation of a planetary drive transmission part or parts.

**127 Pressure regulation:**
This subclass is indented under subclass 116. Subject matter wherein force exerted by the fluid that operates the clutch* or brake* is controlled.

**128 Valving controls shift timing:**
This subclass is indented under subclass 127. Subject matter wherein means is provided to regulate the speed or sequence of engagement or disengagement of a clutch* or brake*.

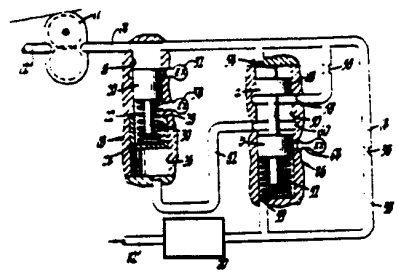

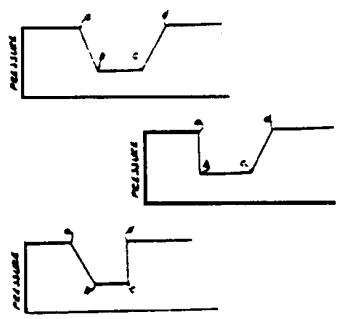

clutch motors; control valves; time; time; time

SEE OR SEARCH CLASS:
477, Interrelated Power Delivery Controls, Including Engine Control, especially subclasses 143+ for shift timing control combined with motor control.

**129 With fluid accumulator:**
This subclass is indented under subclass 128. Subject matter which further includes a variable capacity chamber which is effective to control the buildup of fluid pressure.



U.S. Well - Exhibit 2026
Liberty v. U.S. Well - IPR2025-00778
Page 36 of 70

SEE OR SEARCH CLASS:
138, Pipes and Tubular Conduits, subclasses 30+ for accumulators, per se.

**130 Manual regulator:**
This subclass is indented under subclass 127. Subject matter wherein means to regulate the pressure is controlled by human force.

SEE OR SEARCH CLASS:
477, Interrelated Power Delivery Controls, Including Engine Control, for pressure regulation which may be controlled by actuation of a vehicle accelerator pedal.

**131 Manually actuated ratio selector:**
This subclass is indented under subclass 116. Subject matter wherein significance is attributed to a human operated device utilized to select a particular speed ratio*.

**132 Electrical:**
This subclass is indented under subclass 131. Subject matter wherein said device operates an electrical control.

**133 With safety valve:**
This subclass is indented under subclass 131. Subject matter wherein said device is a valve and means is associated with said valve to prevent damage to the transmission.

SEE OR SEARCH THIS CLASS, SUBCLASS:
119, for a safety device controlled in response to speed.

**134 Plural selector valves:**
This subclass is indented under subclass 131. Subject matter wherein said device includes a plurality of valves.

**135 Rotary valve:**
This subclass is indented under subclass 131. Subject matter wherein said device is a valve which turns about an axis.

**136 With ancillary pump or governor drive:**
This subclass is indented under subclass 116. Subject matter wherein significance is attributed to a drive of an auxiliary pressurizing device or speed responsive valve utilized in fluid control for the transmission.

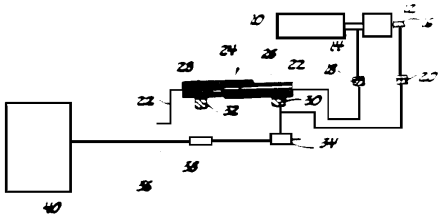

pump; engine; tran

**137 Plural pumps:**
This subclass is indented under subclass 136. Subject matter wherein more than one said device is driven to provide pressurized fluid for control of the transmission.

SEE OR SEARCH CLASS:
477, Interrelated Power Delivery Controls, Including Engine Control, for plural pumps used in transmission control which also includes motor control.

**138 With positive clutch or brake:**
This subclass is indented under subclass 116. Subject matter wherein a clutch* or brake* includes two parts each having teeth which are capable, of meshing, one with the other, to effect a positive, as opposed to a frictional connection therebetween.

(1) Note. The positive clutch* or brake* need not be fluid actuated to be found herein.

**139 And friction synchronizer:**
This subclass is indented under subclass 138. Subject matter wherein frictional means is provided to equalize the speed of the two clutch* or brake* parts before the teeth thereof intermesh.

SEE OR SEARCH THIS CLASS, SUBCLASS:
67, and 303, for other synchronizing clutches or brakes.

SEE OR SEARCH CLASS:
192, Clutches and Power-Stop Control, subclasses 53+ for friction synchronizers, per se.



U.S. Well - Exhibit 2026
Liberty v. U.S. Well - IPR2025-00778
Page 37 of 70

**140 Spring engaged, fluid released clutch or brake device:**
This subclass is indented under subclass 116. Subject matter wherein two parts of the clutch* or brake* are separated by fluid pressure against the resistance of a spring.

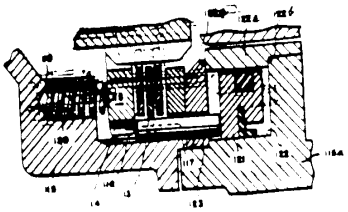

SEE OR SEARCH THIS CLASS, SUBCLASS:
144, for one-way devices that may be placed in inoperative position by means of fluid pressure and operative position by means of a spring.

**141 Plural devices simultaneously spring engaged:**
This subclass is indented under subclass 140. Subject matter wherein more than one clutch or brake is engaged by spring pressure at the same time.

SEE OR SEARCH CLASS:
192, Clutches and Power-Stop Control, subclasses 215+ for related subject matter.

**142 Single fluid motor engages one device and releases other:**
This subclass is indented under subclass 140. Subject matter wherein pressurized fluid is utilized to move a mechanical element and such element is effective to connect the two parts of a clutch* or brake* and disconnect the two parts of another clutch* or brake*.

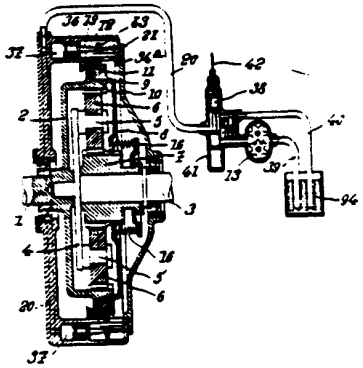

**143 Expanding fluid motor chamber mechanically contracts second motor:**
This subclass is indented under subclass 116. Subject matter wherein the clutch* or brake* is actuated by admitting pressurized fluid to an expansible chamber and the expansion of such chamber effects the collapse of a second fluid expansible chamber.

(1) Note. To be placed here each fluid motor must control a different clutch* or brake*. A double acting motor for one clutch* or brake* is in subclass 146.

**144 Fluid controlled one-way devices:**
This subclass is indented under subclass 116. Subject matter wherein the fluid pressure is operative to control a one-way clutch* or a one-way brake*.

SEE OR SEARCH CLASS:
188, Brakes, subclasses 82.1+ for one-way brakes, per se.
192, Clutches and Power-Stop Control, subclasses 41+ for one-way clutches, per se.

**145 Fluid motor controls device through cam or lever:**
This subclass is indented under subclass 116. Subject matter wherein a chamber wall, expanded by pressurized fluid, is effective to actuate a clutch* or brake* through the medium of a cam or lever.



U.S. Well - Exhibit 2026
Liberty v. U.S. Well - IPR2025-00778
Page 38 of 70

**146 Fluid motor structure:**
This subclass is indented under subclass 116. Subject matter herein significance is attributed to the configuration, support or spatial arrangement of an expansible chamber motor or motors which effect the actuation of the clutch* or brake*.

**147 Radially expanding motor:**
This subclass is indented under subclass 146. Subject matter wherein the fluid motor expands in a radial direction with respect to the rotary axis of the transmission.

**148 With one-way device:**
This subclass is indented under subclass 146. Subject matter and further including a one-way clutch* or one-way brake*.

**149 ELECTRIC OR MAGNETIC DRIVE OR CONTROL:**
This subclass is indented under the class definition. Subject matter wherein (1) the planetary transmission is combined with an electric motor or generator to form a drive train or (2) means is provided to change the speed ratio* or otherwise regulate the operation of the planetary transmission by means of electric or magnetic energy.

(1) Note. Where the electric or magnetic energy regulates a fluid drive or a fluid control that in turn controls the transmission, the patents have been placed with the fluid drive or control under subclass 31.

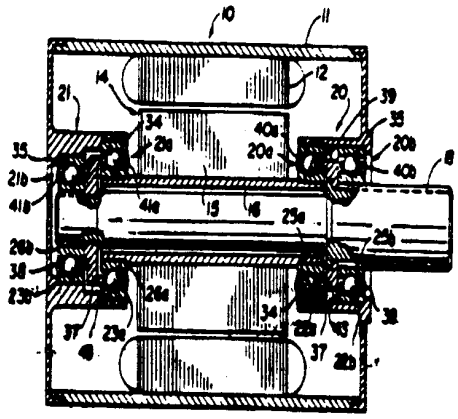

SEE OR SEARCH THIS CLASS, SUBCLASS:

4, and 5, for electric motor drives where plural power sources drives a planetary transmission.

13, for electric motors used as engine starters that are subsequently driven by the engine.

SEE OR SEARCH CLASS:

192, Clutches and Power-Stop Control, subclasses 129+ and 150 for safety devices and overload controls that may turn off power from an electric motor.

310, Electrical Generator or Motor Structure, subclass 83 for the combination with significant dynamo-electric machine structure.

318, Electricity, Motive Power Systems, subclasses 12+ and 15 for Class 310 structure having a significant electrical circuit. See section IE6B of the class 318 definitions for the line with this class.

**150 Differential drive or control:**
This subclass is indented under subclass 149. Subject matter wherein the electric or magnetic drive or control is associated with a differential transmission*.



U.S. Well - Exhibit 2026
Liberty v. U.S. Well - IPR2025-00778
Page 39 of 70

**151 Plural power paths:**
This subclass is indented under subclass 149. Subject matter wherein two power paths extend to or from a planetary transmission, between an input member* and an output member*, and one path includes an electric or magnetic drive.

(1) Note. A clutch* that locks up the planetary transmission for unitary drive* is not considered a separate power path. See other subclasses under subclass 149.

SEE OR SEARCH THIS CLASS, SUBCLASS:
21, for this type drive used in a steering by driving combination.
47+, and 72+, for similar gearing arrangements but using a fluid drive as the variable transmission.

SEE OR SEARCH CLASS:
318, Electricity: Motive Power Systems, subclass 8 for similar systems where the generated electricity is not wholly utilized in the motor-generator systems.

**152 With nonplanetary drive to electric or magnetic path:**
This subclass is indented under subclass 151. Subject matter wherein the input member* is either directly connected to the input of the electric or magnetic path or drivingly connected thereto by gearing not coming under the class definition.

**153 With condition responsive control:**
This subclass is indented under subclass 149. Subject matter herein the electric or magnetic drive or control is regulated by condition responsive* means.

SEE OR SEARCH THIS CLASS, SUBCLASS:
254+, for other condition responsive* controls and see the notes thereunder.

**154 With electric or magnetic controlled brake:**
This subclass is indented under subclass 149. Subject matter wherein the speed ratio* of the planetary transmission is regulated by means of an electrically or magnetically actuated brake*.

**155 And manual speed selector:**
This subclass is indented under subclass 154. Subject matter wherein a human force operated device is used to choose the speed ratio* of the transmission.

SEE OR SEARCH THIS CLASS, SUBCLASS:
132, for a manually operated speed selector of the electrical type that in turn regulates a fluid control.

**156 Electric or magnetic device disengages brake:**
This subclass is indented under subclass 154. Subject matter wherein the electric or magnetic energy is effective to separate one part of the brake* from the other.

**157 Electric or magnetic engaged brake and spring engaged lockup clutch:**
This subclass is indented under subclass 154. Subject matter wherein the electric or magnetic energy is effective to engage the two parts of a brake* and a spring is effective to engage the two parts of a clutch* to provide unitary drive*.

**158 WITH INDICATOR OR ALARM:**
This subclass is indented under the class definition. Subject matter and further including a separate device for indicating a condition thereof or for providing a warning that an undesirable condition exists.

SEE OR SEARCH CLASS:
116, Signals and Indicators, for indicators and alarms in general.

**159 WITH LUBRICATION:**
This subclass is indented under the class definition. Subject matter provided with means for directing or applying a substance between moving parts to reduce friction between the moving parts.

SEE OR SEARCH THIS CLASS, SUBCLASS:
20, for lubrication in a steering by driving combination.



U.S. Well - Exhibit 2026
Liberty v. U.S. Well - IPR2025-00778
Page 40 of 70

SEE OR SEARCH CLASS:

184, Lubrication, for lubricating devices and systems in general.

**160 For differential planetary gearing:**

This subclass is indented under subclass 159. Subject matter wherein the moving parts comprise a differential transmission*.

**161 WITH TRANSMISSION COOLING OR HEATING MEANS:**

This subclass is indented under the class definition. Subject matter and further including means to alter the temperature of an element thereof during operation.

SEE OR SEARCH THIS CLASS, SUBCLASS:

20, for cooling or heating in a steering by driving combination.

**162 PLANET PERIPHERY SURROUNDS AXIS OF INTERACTING GEAR (E.G., ECCENTRICALLY DRIVEN TRANSMISSION):**

This subclass is indented under the class definition. Subject matter wherein a first gear has an axis which follows a path around the axis of a second gear, and wherein the external periphery of the first gear surrounds the axis of the second gear.

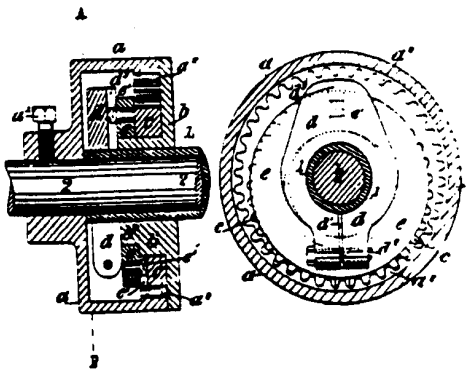

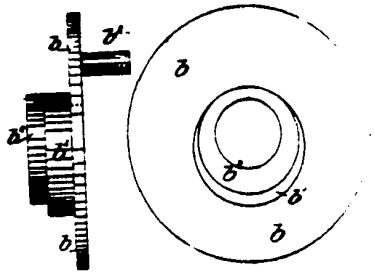

SEE OR SEARCH CLASS:

74, Machine Element or Mechanism, subclass 640 for similar structure using a cam-operated flexible gear, sometimes referred to as “strain-wave” gearing.

**163 Wabbler transmission:**

This subclass is indented under subclass 162. Subject matter wherein drive surfaces of the gears face each other in an axial direction.

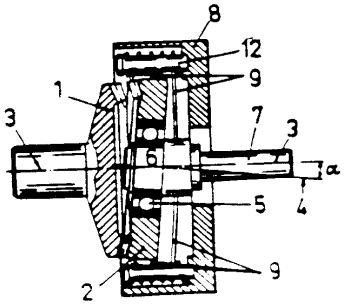


**164 Single member has oppositely axially facing tooth sets:**

This subclass is indented under subclass 163. Subject matter wherein one of the gears has tooth sets one each of oppositely axially facing surfaces



U.S. Well - Exhibit 2026
Liberty v. U.S. Well - IPR2025-00778
Page 41 of 70

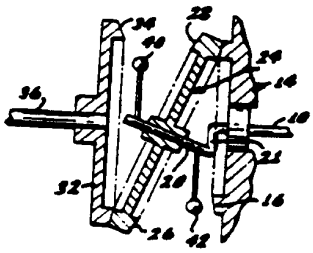

**165 Friction gearing:**
This subclass is indented under subclass 162. Subject matter in which rotary motion is transmitted from one of said gears to the other by frictional engagement.

SEE OR SEARCH THIS CLASS, SUBCLASS:
183+, for related subject matter.

**166 Variable speed:**
This subclass is indented under subclass 165. Subject matter wherein there is included means to vary the speed ratio*.

**167 Link chain gearing:**
This subclass is indented under subclass 162. Subject matter wherein one of said gears comprises an endless member formed of interconnected links forming openings to receive cogs on the periphery of the other of said gears.

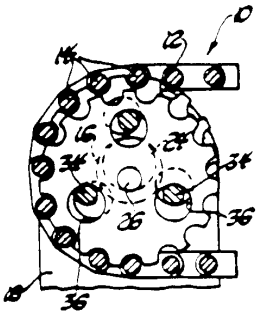

SEE OR SEARCH THIS CLASS, SUBCLASS:
182, for related subject matter.

**168 Gear teeth comprise rolling bodies:**
This subclass is indented under subclass 162. Subject matter wherein surface contact between said first and second gears is via smooth surface cylinders or balls positioned between facing surfaces of said first and second gears.

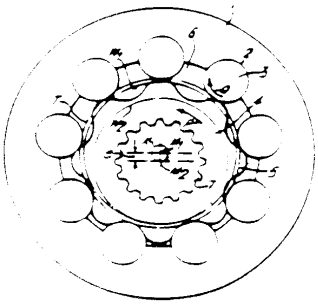

**169 Means to change speed ratio between input and output:**
This subclass is indented under subclass 162. Subject matter including means selectively or automatically actuated to vary the speed ratio*.

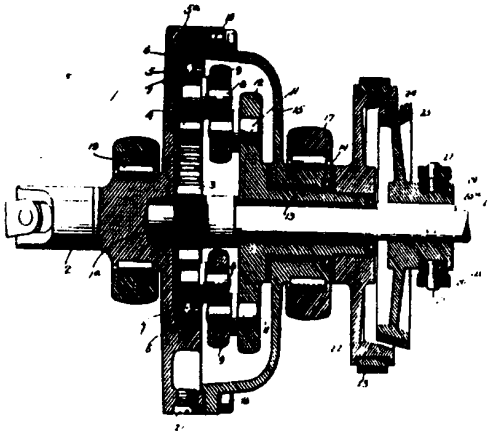

SEE OR SEARCH THIS CLASS, SUBCLASS:
13, where the speed ratio* change is accompanied by an exchange in function of an input member* and an output member*.
166, for means to change the speed ratio* of friction gearing.



U.S. Well - Exhibit 2026
Liberty v. U.S. Well - IPR2025-00778
Page 42 of 70

**170 Variable eccentricity:**
This subclass is indented under subclass 169. Subject matter wherein the varying of the speed ratio* includes means to vary the radius of said path.

**171 Plural power paths to planetary gearing:**
This subclass is indented under subclass 169. Subject matter wherein a power transmitting path extends between an input member* and each of two elements of a planetary transmission while an output member* is driven by a third planetary element.

**172 Condition responsive control:**
This subclass is indented under subclass 169. Subject matter wherein said means is affected by a condition responsive* control.

SEE OR SEARCH THIS CLASS, SUBCLASS:
254+, and see the search notes therein for related subject matter.

**173 Plural planetary elements braked:**
This subclass is indented under subclass 169. Subject matter wherein said means includes structure for applying a brake* to two planetary elements.

**174 Plural outputs:**
This subclass is indented under subclass 162. Subject matter including means to drive at least two load devices*.

SEE OR SEARCH THIS CLASS, SUBCLASS:
322, see the search notes therein for related subject matter.

**175 With releasable clutch or brake:**
This subclass is indented under subclass 162. Subject matter which further has a selectively or automatically actuatable clutch* or brake* in a drive train* for said gears.

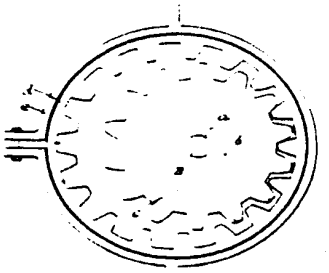

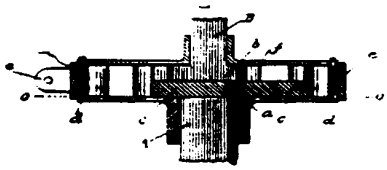

releasable brake to establish or release drive

SEE OR SEARCH THIS CLASS, SUBCLASS:
68, and 900, for related subject matter, and 169+ for a clutch or brake to change speed ratio in this kind of gearing.

**176 Gear has plural circumferential tooth sets:**
This subclass is indented under subclass 162. Subject matter wherein said first or second gear has a plurality of sets of drive teeth protecting therefrom, said sets being connected to each other for common movement.

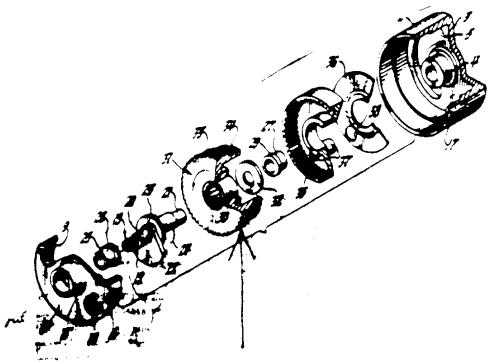



U.S. Well - Exhibit 2026
Liberty v. U.S. Well - IPR2025-00778
Page 43 of 70

**177 Internal and external tooth sets:**
This subclass is indented under subclass 176. Subject matter wherein the teeth of one of said sets of teeth project inwardly, and the teeth of the other of said sets of teeth project outwardly.

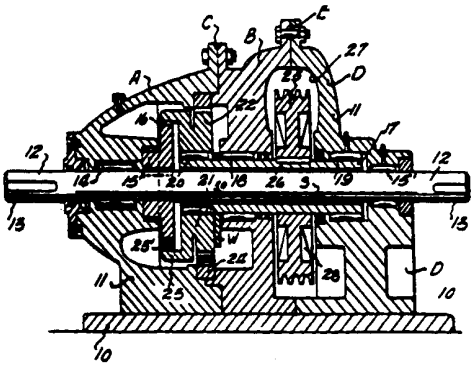

**178 Circumferentially spaced connector pins:**
This subclass is indented under subclass 162. Subject matter wherein a plurality of peg-like elements are spaced about the axis of one of said gears to guide said gear for relative motion with respect to a stationary reaction element, or to guide said gear for relative motion with respect to another rotary member.

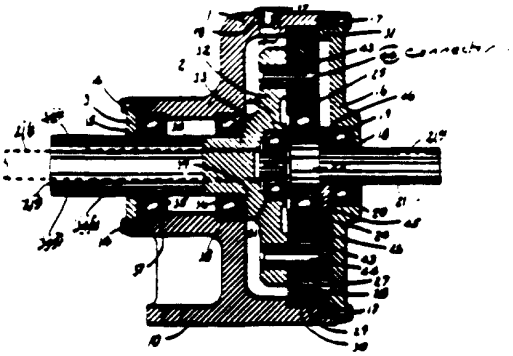

**179 Roller bearing surrounds pin:**
This subclass is indented under subclass 178. Subject matter wherein said peg-like elements are guided for movement by roller bearings.

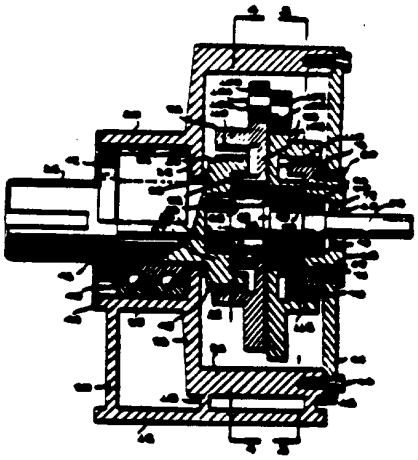

**180 Particular gear teeth:**
This subclass is indented under subclass 162. Subject matter wherein significance is attributed to the configuration or material of a tooth used in one of said gears.

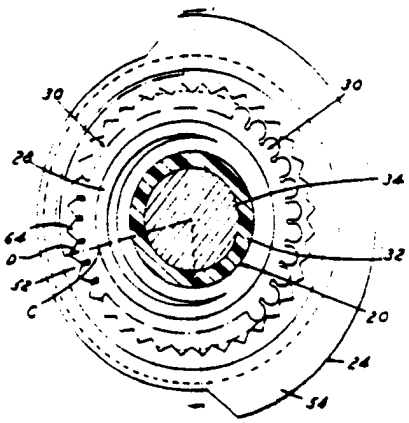

Resiliently deformable teeth

SEE OR SEARCH THIS CLASS, SUBCLASS:
344+, for related subject matter

**181 Particular counterweight:**
This subclass is indented under subclass 162. Subject matter wherein significance is attributed to the configuration, material or location of a mass to balance one of said gears or rotating drive train* members.



U.S. Well - Exhibit 2026
Liberty v. U.S. Well - IPR2025-00778
Page 44 of 70

**182 PLANET PINION ENGAGES FLEXIBLE BELT OR CHAIN:**
This subclass is indented under the class definition. Subject matter wherein a planet pinion* has a driving surface which is in driving engagement with an endless pliant member.

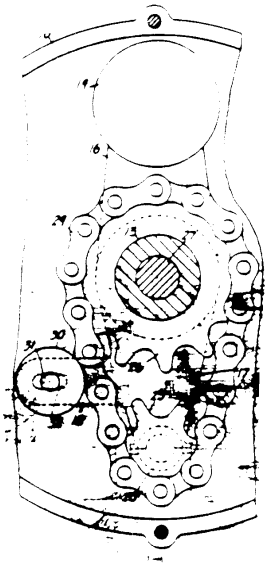

SEE OR SEARCH THIS CLASS, SUBCLASS:
167, for related subject matter.

**183 PLANET PINION IS FRICTION GEAR:**
This subclass is indented under the class definition. Subject matter wherein a planet pinion includes a drive surface which receives or transmits rotary motion to a mating gear by frictional contact.

SEE OR SEARCH THIS CLASS, SUBCLASS:
26, for a friction drive in steering by driving, 114+ for fluid control of friction gearing, and 165+ for friction gearing in an eccentrically driven transmission.

**184 Plural outputs (e.g., differential):**
This subclass is indented under subclass 183. Subject matter wherein plural load devices* are driven by the planetary transmission using said planet pinion*.

SEE OR SEARCH THIS CLASS, SUBCLASS:
332, and see the search notes therein for related subject matter.

**185 Variable speed ratio (without slippage):**
This subclass is indented under subclass 183. Subject matter wherein means is provided to change the speed ratio*.

(1) Note. A patent is not considered appropriate for this or indented subclasses if slippage between contacting surfaces is the only way the speed ratio is changed.

**186 Condition responsive ratio change:**
This subclass is indented under subclass 185. Subject matter wherein said ratio changing means is condition responsive*.

SEE OR SEARCH THIS CLASS, SUBCLASS:
254, and see the search notes therein for related subject matter.

**187 Releasably braked element:**
This subclass is indented under subclass 185. Subject matter wherein said ratio changing means comprises a selectively actuatable brake* for an element of a planetary transmission.

**188 Plural elements releasably braked:**
This subclass is indented under subclass 187. Subject matter which further include means to apply a second brake* to another element of said planetary transmission.

**189 Planet pinion is a ball:**
This subclass is indented under subclass 185. Subject matter wherein said planet pinion* is a spherical element.

SEE OR SEARCH THIS CLASS, SUBCLASS:
196, for related subject matter.

**190 Planet pinion rotatable about axis at angle to axis of input or output gear:**
This subclass is indented under subclass 185. Subject matter wherein said planet pinion* is mounted for rotation about an axis which is angularly related with respect to the rotational



U.S. Well - Exhibit 2026
Liberty v. U.S. Well - IPR2025-00778
Page 45 of 70

axis of a gear in driving relationship with said planet pinion*.

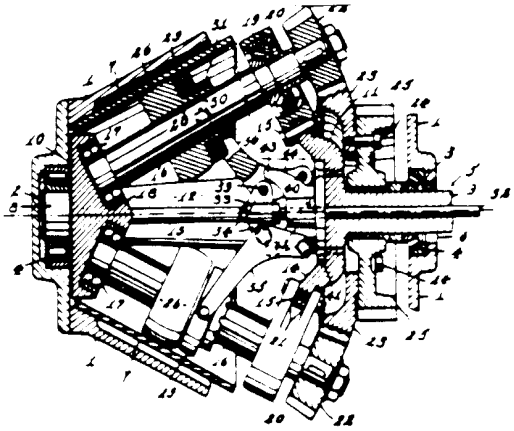

SEE OR SEARCH THIS CLASS, SUBCLASS:

9, 197, 230+, 251+, 273+, 306+, and 336, for related subject matter.

**191 Planet pinion is member having axis fixed or adjustable to position perpendicular to axis of input or output gear:**

This subclass is indented under subclass 190. Subject matter wherein said angular relationship is a right angle and wherein said planet pinion* is either fixed or adjustable to said right angle position.

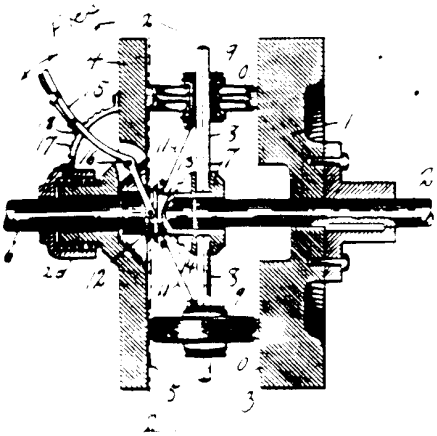

**192 Pinion engages facing concave surfaces (e.g., mounted in torus.):**

This subclass is indented under subclass 191. Subject matter wherein a pair of gears in driving relationship with said planet pinion* include concave surfaces facing each other to define a cavity for said planet pinion*.

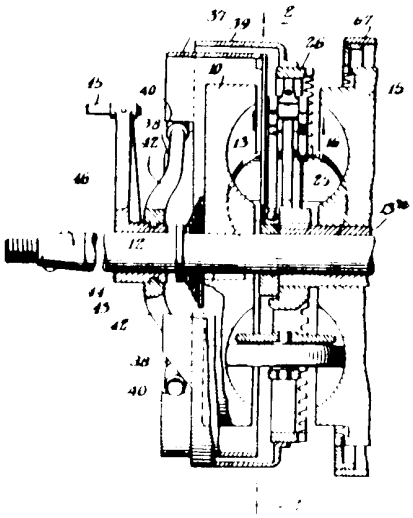

**193 Conical or frusto-conical planet pinion:**

This subclass is indented under subclass 190. Subject matter wherein said planet pinion* is in the shape of a cone or the frustum of a cone.

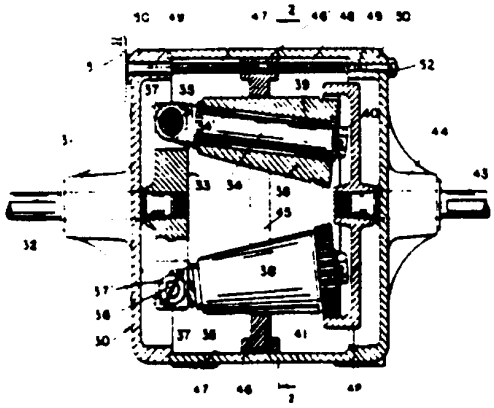



U.S. Well - Exhibit 2026
Liberty v. U.S. Well - IPR2025-00778
Page 46 of 70

**194 Torque responsive means to increase contact pressure:**
This subclass is indented under subclass 193. Subject matter including means for sensing resistance to movement or change in resistance to movement of a load device* or of a member in a drive train*; and, in response to such sensed resistance or change of resistance to movement, said means acts to increase pressure of frictional contact between said planet pinion* and a mating gear.

SEE OR SEARCH THIS CLASS, SUBCLASS:
195, for related subject matter.

**195 Torque responsive means to increase contact pressure:**
This subclass is indented under subclass 183. Subject matter including means for sensing resistance to movement or change in resistance to movement of a load device* or of a member in a drive train*; and, in response to such sensed resistance or change of resistance to movement, said means acts to increase pressure of frictional contact between said planet pinion* and a mating gear.

SEE OR SEARCH THIS CLASS, SUBCLASS:
194, for related subject matter.

**196 Planet pinion is ball:**
This subclass is indented under subclass 183. Subject matter wherein said planet pinion* is a spherical element.

SEE OR SEARCH THIS CLASS, SUBCLASS:
189, for a spherical planet pinion in a variable ratio transmission.

**197 Planet pinion rotatable about axis at angle to axis of input or output gear:**
This subclass is indented under subclass 183. Subject matter wherein said planet pinion* is mounted for rotation about an axis which is angularly related with respect to the rotational axis of a gear in driving relationship with said planet pinion*.

SEE OR SEARCH THIS CLASS, SUBCLASS:
9, 190+, 230+, 251+, 273+, 306+, and 336, for related subject matter.

**198 VARIABLE SPEED OR DIRECTION TRANSMISSION COMBINED WITH DIFFERENTIAL:**
This subclass is indented under the class definition. Subject matter wherein a differential transmission* is associated with another transmission capable of speed ratio* change or capable of reversing the direction of relative rotation between input and output shafts of said other transmission.

SEE OR SEARCH THIS CLASS, SUBCLASS:
220+, for differential planetary gearing.

SEE OR SEARCH CLASS:
74, Machine Element or Mechanism, for variable speed or direction transmissions.
474, Endless Belt Power Transmission Systems or Components, for non-planetary belt or chain gearing.

**199 Condition responsive:**
This subclass is indented under subclass 198. Subject matter wherein said speed ratio* change or said direction reversal is condition responsive*.

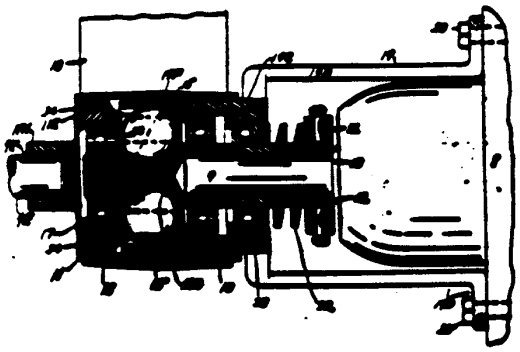

SEE OR SEARCH THIS CLASS, SUBCLASS:
254+, and see the search notes therein for related subject matter.



U.S. Well - Exhibit 2026
Liberty v. U.S. Well - IPR2025-00778
Page 47 of 70

**200 Differential is beneath prime mover or transmission:**
This subclass is indented under subclass 198. Subject matter wherein significance is attributed to locating said differential transmission* at a position below a power source* or under said other transmission.

**201 Differential is between prime mover and transmission in the path of power flow:**
This subclass is indented under subclass 198. Subject matter wherein said differential transmission* is positioned relative to said other transmission and a power source* so that power flows in a direction from said power source* through said differential transmission* to said other transmission.

SEE OR SEARCH THIS CLASS, SUBCLASS:
18+, for this arrangement in a steering by driving combination.

**202 With universal joint in drive train:**
This subclass is indented under subclass 198. Subject matter including connecting means between two shaft elements in a drive train*, said connecting means permitting rotation to be transmitted from one element to the other when the axes of said elements are misaligned or angularly related.

SEE OR SEARCH THIS CLASS, SUBCLASS:
464, Rotary Shafts Gudgeons, Housings, and Flexible Couplings for Rotary, for universal joints in general.

**203 Plural selectively driveable gears surround differential:**
This subclass is indented under subclass 198. Subject matter wherein input power to said differential transmission* is selectively supplied by either of two gears which encircle the external periphery of said differential transmission.

**204 Variable speed or direction transmission is planetary:**
This subclass is indented under subclass 198. Subject matter wherein said other transmission is a planetary gear transmission as defined in the class definition.

SEE OR SEARCH THIS CLASS, SUBCLASS:
71, for this combination together with a fluid drive.

**205 Plural planetary units combined with differential:**
This subclass is indented under subclass 204. Subject matter and further including a second planetary gear transmission.

SEE OR SEARCH THIS CLASS, SUBCLASS:
71, for this combination together with a fluid drive.

**206 Transmission output shaft parallel to differential output shafts:**
This subclass is indented under subclass 198. Subject matter wherein the axis of the output shaft of said other transmission extends in a direction parallel to the axis of output shafts of said differential transmission*.

**207 NONPLANETARY VARIABLE SPEED OR DIRECTION TRANSMISSION COMBINED WITH PLANETARY TRANSMISSION:**
This subclass is indented under the class definition. Subject matter which includes a power transmitting mechanism, other than a planetary gear transmission, having an input and an output shaft, and means capable of speed ratio* change between said shafts or capable of changing the direction of relative rotation of said shafts.

SEE OR SEARCH THIS CLASS, SUBCLASS:
52, and 66, for this combination with a fluid drive.
80+, for a transmission of the type found therein combined with a change speed non-planetary transmission.
198+, for a change speed or direction transmission combined with a differential*.

SEE OR SEARCH CLASS:
74, Machine Element or Mechanism, for nonplanetary variable speed gearing.



U.S. Well - Exhibit 2026
Liberty v. U.S. Well - IPR2025-00778
Page 48 of 70

**208 Condition responsive:**
This subclass is indented under subclass 207. Subject matter and further including a control which is condition responsive*.

SEE OR SEARCH THIS CLASS, SUBCLASS:
254, and see the search notes therein for related subject matter.

**209 Interrelated control of in series transmissions:**
This subclass is indented under subclass 207. Subject matter wherein a planetary gear transmission has first control means, and said power transmitting mechanism other than the planetary gear transmission has second control means; and wherein operation of one of said first or second control means affects the operation of the other of said control means.

**210 Nonplanetary transmission is belt or chain gearing:**
This subclass is indented under subclass 207. Subject matter wherein said power transmitting mechanism includes a flexible endless member in a drive train*.

SEE OR SEARCH CLASS:
474, Endless Belt Power Transmission Systems or Components, for nonplanetary belt or chain gearing.

**211 Plural power paths to planetary gearing:**
This subclass is indented under subclass 210. Subject matter wherein said power transmitting mechanism has at least two power output members leading therefrom, said power output members being connected to different elements of a planetary gear transmission to provide rotary input to either or both of said elements of said planetary transmission.

SEE OR SEARCH THIS CLASS, SUBCLASS:
329+, and see the search notes therein for related subject matter.

**212 Nonplanetary transmission is chain gearing:**
This subclass is indented under subclass 211. Subject matter wherein said power transmitting mechanism comprises an endless member formed of rigid links.

**213 Nonplanetary transmission is chain gearing:**
This subclass is indented under subclass 210. Subject matter wherein said power transmitting mechanism comprises an endless member formed of rigid links.

**214 Nonplanetary transmission is friction gearing:**
This subclass is indented under subclass 207. Subject matter wherein said power transmitting mechanism includes a gear which receives or transmits rotary motion to a mating gear by frictional contact.

SEE OR SEARCH CLASS:
476, Friction Gear Transmission Systems or Components, for nonplanetary friction gearing, per se.

**215 Plural power paths to planetary gearing:**
This subclass is indented under subclass 214. Subject matter wherein said power transmitting mechanism has at least two power output members leading therefrom, said power output members being connected to different elements of a planetary gear transmission to provide rotary input to either or both of said elements of said planetary gear transmission.

SEE OR SEARCH THIS CLASS, SUBCLASS:
329+, and see the search notes therein for related subject matter.

**216 Friction gear engages facing concave surfaces:**
This subclass is indented under subclass 215. Subject matter wherein said power transmitting mechanism includes a gear between two members having facing concave surfaces.



U.S. Well - Exhibit 2026
Liberty v. U.S. Well - IPR2025-00778
Page 49 of 70

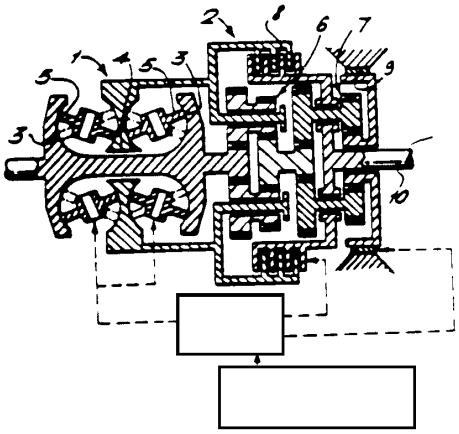

input; output; control means; regime change inhibit

**217 Nonplanetary transmission is disc and wheel:**
This subclass is indented under subclass 215. Subject matter wherein one of said gears is in the form of a plate having a friction drive face, and the other said gear is generally cylindrical and has a friction drive surface on the rim thereof in contact with said face; said cylindrical gear being mounted for rotation about an axis generally perpendicular to a rotational axis of said plate, and the point of contact of said face with said rim being adjustable in a radial direction with respect to the axis of the plate to vary the speed ratio*.

**218 Plural power paths to planetary gearing:**
This subclass is indented under subclass 207. Subject matter wherein said power transmitting mechanism has at least two power output members leading therefrom, said power output members being connected to different elements of a planetary gear transmission to provide rotary input to either or both of said elements of said planetary gear transmission.

SEE OR SEARCH THIS CLASS, SUBCLASS:
80+, for a transmission of the kind found therein combined with change speed nonplanetary transmission.
329+, and see the search notes therein for related subject matter.

**219 Plural planetary units:**
This subclass is indented under subclass 207. Subject matter which includes at least two planetary gear transmissions.

SEE OR SEARCH THIS CLASS, SUBCLASS:
52, and 66, for related art.
80+, for a transmission of the type found therein combined with a change speed nonplanetary transmission.

**220 DIFFERENTIAL PLANETARY GEARING:**
This subclass is indented under the class definition. Subject matter which includes a differential transmission* in a drive train*.

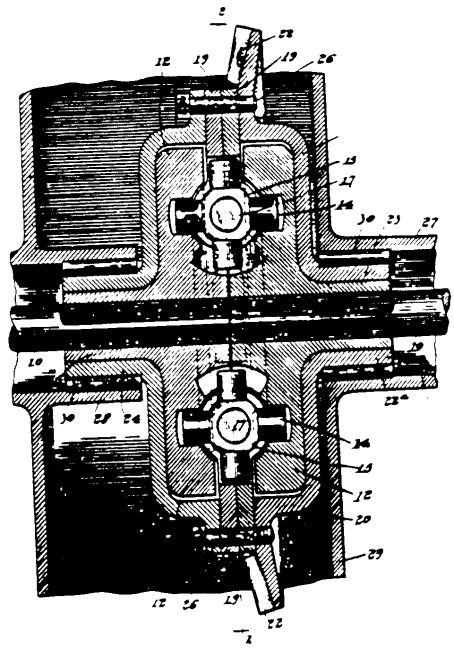

SEE OR SEARCH THIS CLASS, SUBCLASS:
6, 15, 18+, 71, 84+, 150, 160, 174, 184, and 198+ for other differential planetary gearing or combinations therewith.



U.S. Well - Exhibit 2026
Liberty v. U.S. Well - IPR2025-00778
Page 50 of 70

**221 Differential or nondifferential planetary combined with differential (e.g., two differentials):**
This subclass is indented under subclass 220. Subject matter which includes at least two differential transmissions* or which includes a differential transmission* and another planetary gear transmission.

SEE OR SEARCH THIS CLASS, SUBCLASS:
198+, for a variable speed or direction transmission combined with a differential.

SEE OR SEARCH CLASS:
180, Motor Vehicles, subclasses 233+ for four wheel drive vehicles which may include plural differentials.

**222 With universal joint in drive train:**
This subclass is indented under subclass 220. Subject matter including connecting means between two shaft elements in said drive train*, said connecting means permitting rotation to be transmitted from one element to the other when the axes of said elements are misaligned or angularly related.

SEE OR SEARCH THIS CLASS, SUBCLASS:
202, and 346+, for related subject matter.

**223 Including means to selectively apply rotational power to only one output:**
This subclass is indented under subclass 220. Subject matter including means to disconnect one output from said differential transmission* while driving the other output, or including means to apply a brake* to one of said outputs while driving the other output.

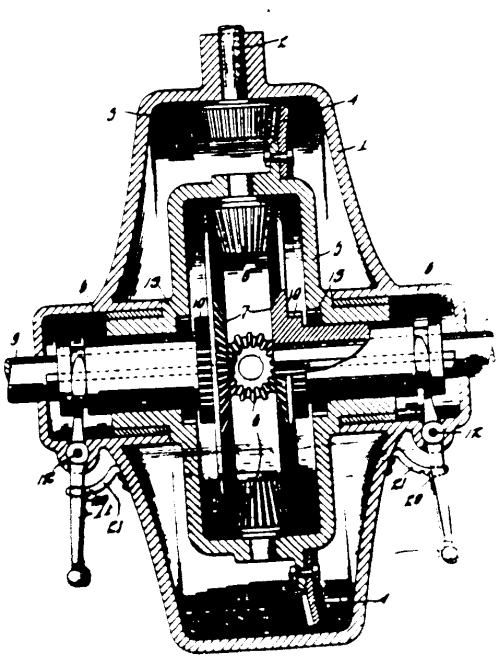

**224 By braking other output:**
This subclass is indented under subclass 223. Subject matter including means to apply a brake* to one of said outputs while driving the other output.

**225 With additional gearset between differential output and load:**
This subclass is indented under subclass 220. Subject matter including nonplanetary gearing between an output of said differential transmission and a load device*.

SEE OR SEARCH THIS CLASS, SUBCLASS:
343, and see the search notes therein for related subject matter.

**226 Planet pinion is worm gear:**
This subclass is indented under subclass 220. Subject matter wherein a planet pinion* in said differential transmission* is a worm gear*.



U.S. Well - Exhibit 2026
Liberty v. U.S. Well - IPR2025-00778
Page 51 of 70

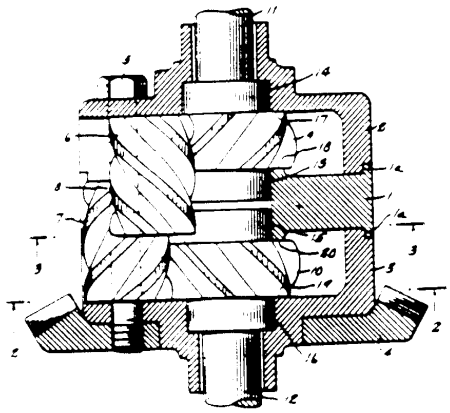

SEE OR SEARCH THIS CLASS, SUBCLASS:

7, 304 and 333, for related subject matter.

**227 And spur gear on pinion:**

This subclass is indented under subclass 226. Subject matter wherein said planet pinion* also includes a spur gear*.

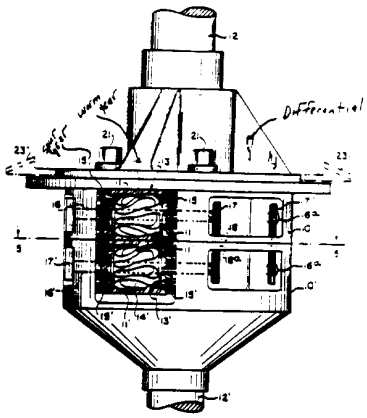


**228 Worm drive on input shaft:**

This subclass is indented under subclass 220. Subject matter wherein input power to said differential transmission* is supplied by a worm gear*.

SEE OR SEARCH THIS CLASS, SUBCLASS:

7, for related subject matter.

**229 And roller bearing supporting worm from casing:**

This subclass is indented under subclass 228. Subject matter wherein said worm gear* is supported for rotation by ball bearings or cylindrical bearings positioned around the axis of said worm gear.

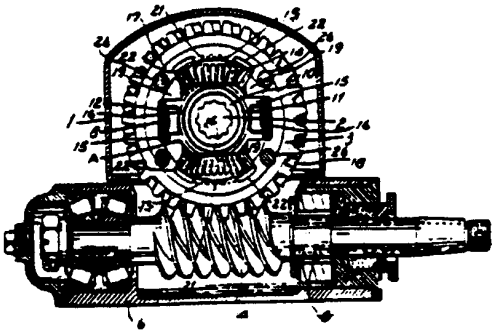

**230 Bevel gear differential:**

This subclass is indented under subclass 220. Subject matter wherein said differential gearing* is formed by bevel gears*.

SEE OR SEARCH THIS CLASS, SUBCLASS:

9, 190+, 197, 273+, 306+, and 336, for related subject matter.

**231 With means to limit overspeed of one output (e.g., lock-up clutch):**

This subclass is indented under subclass 230. Subject matter including means to restrict the amount the rotational velocity of one of the output members of said differential transmission* may exceed the rotational velocity of the other of said output members.

SEE OR SEARCH THIS CLASS, SUBCLASS:

86+, for fluid actuated clutches* in differentials*

150, for electric or magnetic controlled differentials*

249+, for related subject matter.



U.S. Well - Exhibit 2026
Liberty v. U.S. Well - IPR2025-00778
Page 52 of 70

**232 Centrifugal actuator:**
This subclass is indented under subclass 231. Subject matter wherein said means for restricting said rotational velocity includes an element movable outwardly in response to inertial force caused by rotation of a part in said differential transmission*.

**233 Lock-up clutch between pinion and pinion carrier:**
This subclass is indented under subclass 231. Subject matter wherein said means includes an element for directly locking a planet pinion* to a cage carrying said pinion or to a supporting pin for said pinion.

SEE OR SEARCH THIS CLASS, SUBCLASS:
91, 108, 109+, and 305, for related subject matter.

**234 By axial movement of output gear:**
This subclass is indented under subclass 231. Subject matter wherein said restricting means is operated by movement of one said output members in a direction parallel to its axis of rotation.

**235 With spring bias on gear or clutch:**
This subclass is indented under subclass 234. Subject matter including resilient means providing a force bias on said output gear, or on a clutch* therefor, in a direction parallel to its rotational axis.

SEE OR SEARCH THIS CLASS, SUBCLASS:
240+, for related subject matter.

**236 Particular gear shape or tooth interaction limits overspeed:**
This subclass is indented under subclass 231. Subject matter wherein significance is attributed to a special shape of a gear tooth or to a special interaction between gear teeth to provide said restriction.

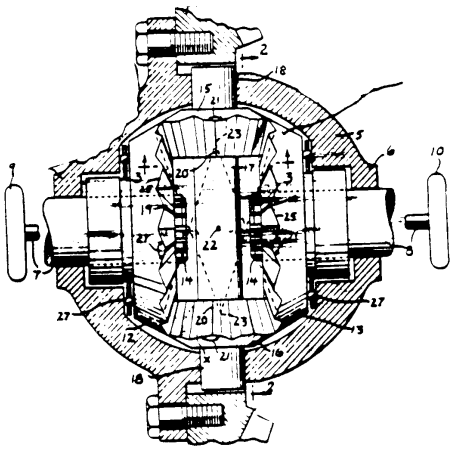

particular angle of gear teeth causes lock-up

**237 Manual actuator:**
This subclass is indented under subclass 231. Subject matter wherein said restricting means includes a member selectively actuatable by human force.

SEE OR SEARCH THIS CLASS, SUBCLASS:
250, for related subject matter.

**238 Friction clutch:**
This subclass is indented under subclass 237. Subject matter wherein said restricting means comprises a clutch* in which pressure and resultant friction between faces of two relatively movable parts causes the parts to have common movement.

**239 Plate clutch:**
This subclass is indented under subclass 238. Subject matter in which said relatively movable parts are in the form of discs.

**240 Spring bias on overspeed limiting means:**
This subclass is indented under subclass 231. Subject matter wherein said restricting means include a resilient member urging a part thereof in one direction.

SEE OR SEARCH THIS CLASS, SUBCLASS:
235, for related subject matter.



U.S. Well - Exhibit 2026
Liberty v. U.S. Well - IPR2025-00778
Page 53 of 70

**241 Helically coiled spring:**
This subclass is indented under subclass 240. Subject matter wherein said resilient member is a wire coiled in the shape of a helix.

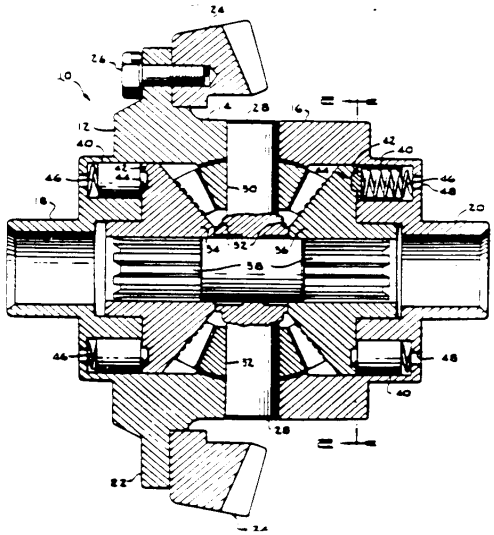

**242 Separate planet pinions or separate tooth set on same pinion for each output:**
This subclass is indented under subclass 230. Subject matter wherein a separate planet pinion* is provided in said differential gearing* for each output thereof; or wherein a planet pinion has first and second tooth sets thereon, the first of said tooth sets engaging one of said outputs, and the second of said tooth sets engaging the other of said outputs.

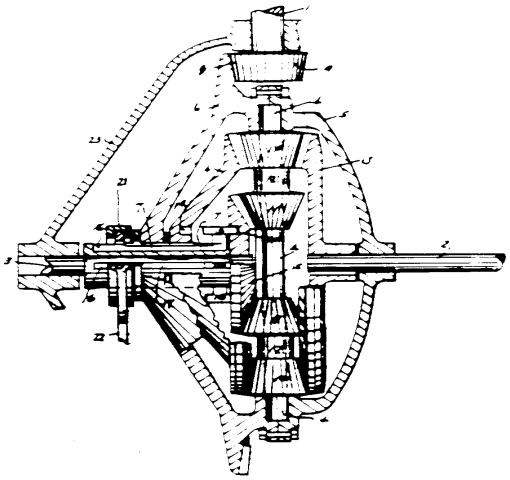

**243 Output gear rotatable relative to axial support shaft:**
This subclass is indented under subclass 230. Subject matter wherein one of the output gears of said differential transmission* is rotatable relative to a shaft upon which the gear is mounted.

**244 Support shaft coupled to other output gear:**
This subclass is indented under subclass 243. Subject matter wherein said shaft is connected to another of the output gears for joint rotation therewith.

**245 With roller bearing between output gear and shaft:**
This subclass is indented under subclass 243. Subject matter wherein said output gear is supported for rotation on said shaft by ball-bearings or cylindrical bearings positioned around the axis of said shaft.

**246 With roller bearing between gear and its support:**
This subclass is indented under subclass 230. Subject matter wherein at least one of said bevel gears* is supported for rotation by ball bearings or by cylindrical bearings surrounding the rotational axis of the bevel gear.

SEE OR SEARCH THIS CLASS, SUBCLASS:
253, and 348, for related subject matter.

**247 Ball bearing:**
This subclass is indented under subclass 246. Subject matter wherein said bearings are in the shape of a round ball.

**248 Spur gear differential:**
This subclass is indented under subclass 220. Subject matter wherein said differential gearing* is formed of spur gear*.

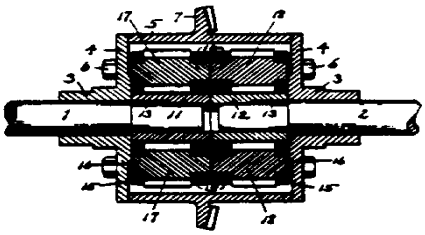



U.S. Well - Exhibit 2026
Liberty v. U.S. Well - IPR2025-00778
Page 54 of 70

**249 With means to limit overspeed of one output:**

This subclass is indented under subclass 248. Subject matter including means to restrict the amount the rotational velocity of one of the output members of said differential transmission* may exceed the rotational velocity of the other of said output members.

SEE OR SEARCH THIS CLASS, SUBCLASS:

84+, for fluid actuated clutches* in differentials*

150, for electric or magnetic controlled differentials*

231+, for related subjected matter.

**250 Manual actuator:**

This subclass is indented under subclass 249. Subject matter wherein said restricting means includes a member selectively actuatable by human force.

SEE OR SEARCH THIS CLASS, SUBCLASS:

237+, for related subject matter.

**251 Pinion axis at angle intersecting axis of output:**

This subclass is indented under subclass 248. Subject matter wherein the axis of rotation* of a planet pinion* in said differential gearing* extends at an angle with respect to the rotational axis of an output member of said differential gearing.

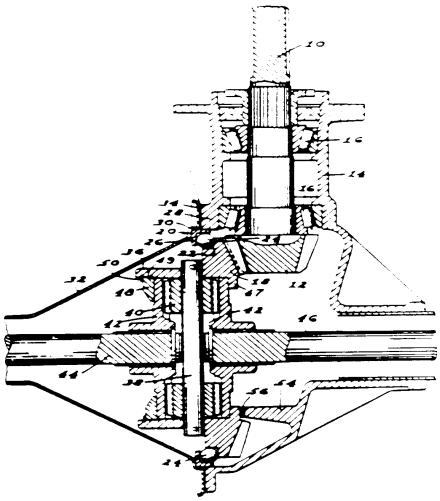

SEE OR SEARCH THIS CLASS, SUBCLASS:

190+, 197, 273+, 306+, and 336, for related subject matter.

**252 Intermeshing planet pinions:**

This subclass is indented under subclass 248. Subject matter wherein said differential gearing* includes a plurality of planet pinions* having gear teeth which intermesh with each other.



U.S. Well - Exhibit 2026
Liberty v. U.S. Well - IPR2025-00778
Page 55 of 70

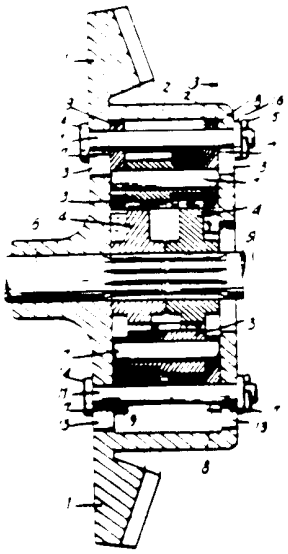

**253 With roller bearing between gear and its support:**
This subclass is indented under subclass 248. wherein at least one of said spur gears* is supported for rotation by ball bearings or by cylindrical bearings surrounding the rotational axis of said spur gear.

SEE OR SEARCH THIS CLASS, SUBCLASS:
246, and 348, for related subject matter.

**254 CONDITION RESPONSIVE CONTROL:**
This subclass is indented under the class definition. Subject matter together with a condition responsive* transmission regulating means.

SEE OR SEARCH THIS CLASS, SUBCLASS:
2, 19, 42, 43, 47, 51, 60, 76, 94, 117, 118, 125, 153, 186, 199, 208, and 232, for various transmission combinations including condition responsive* control.

SEE OR SEARCH CLASS:
477, Interrelated Power Delivery Controls, Including Engine Control, for condition responsive transmission control also including motor control.

**255 Eccentrically weighted planet:**
This subclass is indented under subclass 254. Subject matter wherein a planet pinion* includes an additional mass carried thereby at a location spaced from its axis.

SEE OR SEARCH THIS CLASS, SUBCLASS:
112, for a similar combination but using fluid as the eccentric weight.

**256 Downshift responsive to high speed limit:**
This subclass is indented under subclass 254. Subject matter wherein a planetary transmission is regulated such that the attainment of an undesirable fast speed is prevented by changing the speed ratio* to rotate an output member* at a lower velocity.

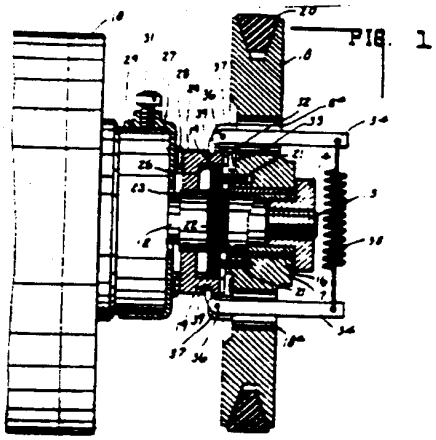


flyweight

**257 Speed responsive control adjusted or opposed by torque:**
This subclass is indented under subclass 254. Subject matter wherein a planetary transmission is regulated in response to the velocity of one of its parts but such regulation is modified by the rotary effort exerted by a transmission part.

**258 Centrifugally controlled clutch or brake:**
This subclass is indented under subclass 254. 7Subject matter wherein a clutch* or brake* is utilized to change the speed ratio* of a planetary transmission and the operation of such



U.S. Well - Exhibit 2026
Liberty v. U.S. Well - IPR2025-00778
Page 56 of 70

clutch* or brake* is controlled by the velocity of a transmission part as measured by the centrifugal force of a mass rotating with said part.

**259 One-way clutch or brake:**
This subclass is indented under subclass 258. Subject matter wherein the clutch* or brake* controlled is a one-way clutch* or a one-way brake*.

**260 Centrifugal brake control:**
This subclass is indented under subclass 258. Subject matter wherein the device controlled is a brake*.

**261 Positive clutch:**
This subclass is indented under subclass 258. Subject matter wherein two parts of a controlled clutch* each include teeth-like elements thereon that mesh when the clutch is engaged so that torque is delivered positively, as opposed to frictionally, from one part to the other.

**262 Axially engaged friction clutch:**
This subclass is indented under subclass 258. Subject matter wherein a controlled clutch* has two parts with frictional drive faces and the two parts of the controlled clutch* are moved, one relative to the other, in the direction of the transmission axis to engage or disengage their frictional surfaces.

**263 Overload release:**
This subclass is indented under subclass 254. Subject matter including means to sense when torque to an output member* exceeds a predetermined value; and, in response to such sensing, interrupt the flow of power through a drive train* power path.

SEE OR SEARCH THIS CLASS, SUBCLASS:
192, Clutches and Power-Stop Control, subclasses 56+, 129+ and 150 for related art.
464, Rotary Shafts, Gudgeons, Housings, and Flexible Couplings for Rotary Shafts, subclasses 30+ for an overload release coupling in a drive train.

**264 Spring applied friction drive establishing means:**
This subclass is indented under subclass 263. Subject matter wherein a coupling, clutch* or brake* is utilized to establish a speed ratio* in a planetary transmission, such coupling, clutch* or brake* being of a non-positive, friction type and being engaged by a spring and disengaged in response to torque.

(1) Note. In disengaging the coupling, clutch* or brake* a second coupling, clutch* or brake* may or may not be engaged.

SEE OR SEARCH THIS CLASS, SUBCLASS:
140+, for a spring applied and fluid released clutch* or brake*
301, for a clutch* or brake* consisting of a helical spring.

**265 Drive establishing means is friction brake:**
This subclass is indented under subclass 264. Subject matter wherein the speed ratio is established by a spring engaged brake*.

**266 Stepped, torque responsive ratio change:**
This subclass is indented under subclass 254. Subject matter wherein a plurality of distinct speed ratios* are effected by the use of a plurality of clutches* or brakes* and the change from one ratio to another is in response to the turning effort of a part of a transmission.

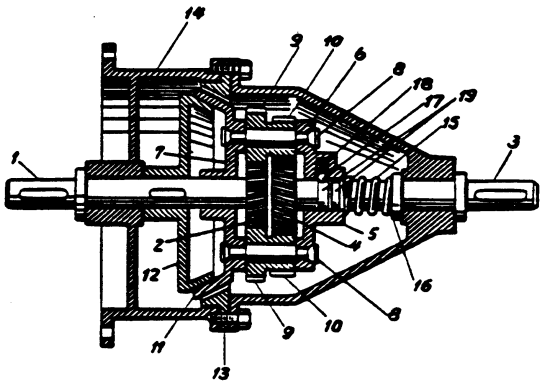




U.S. Well - Exhibit 2026
Liberty v. U.S. Well - IPR2025-00778
Page 57 of 70

SEE OR SEARCH THIS CLASS, SUBCLASS:

12, for a stepped ratio change in response to the change in direction of an input member*.

**267 With flywheel or centrifugal weight control:**

This subclass is indented under subclass 254. Subject matter wherein a planetary transmission is controlled in response to (1) the affect thereon of the inertia of a separate mass driven by a transmission part, or (2) the radially acting force produced in response to the speed of a transmission part by a separate mass driven by said part and spaced from the rotary axis of such part.

SEE OR SEARCH THIS CLASS, SUBCLASS:

255, for eccentrically weighted planet pinions* and 258+ for centrifugally controlled clutch* or brake*.

SEE OR SEARCH CLASS:

180, Motor Vehicles, subclass 165 for the use of a flywheel in a power delivery system together with significant vehicle structure.

**268 With planet axis at angle to axis of mating gear (e.g., bevel gears):**

This subclass is indented under subclass 267. Subject matter wherein a planet pinion* axis extends at an angle with respect to the rotational axis of a gear that meshes with said planet pinion.

**269 WITH MEANS TO VARY DRIVE RATIO OR DISCONNECT DRIVE (E.G., BRAKE OR CLUTCH):**

This subclass is indented under the class definition. Subject matter which includes a ratio-changing device to provide at least two different speed ratios*; or wherein means are provided to disconnect the flow of power to an output member* while an input member* continues to rotate.

SEE OR SEARCH THIS CLASS, SUBCLASS:

91+, for fluid-resistance type clutches* and brakes*.

116+, for fluid control of clutches* and brakes*.

149+, for electrical control of clutches* and brakes*.

**270 Manual force provides reaction during drive:**

This subclass is indented under subclass 269. Subject matter wherein a reaction force in a planetary gear transmission is provided by human force limiting or preventing rotation of an element in the transmission while another element in the transmission provides rotation to an output member*.

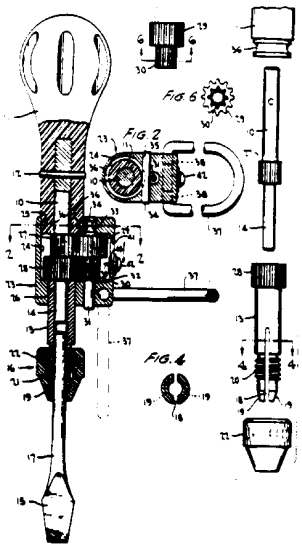


**271 Plural elements selectively braked:**

This subclass is indented under subclass 269. Subject matter wherein an assemblage which comprises a planetary gear transmission or a plurality of planetary gear transmissions has at least two elements thereof which are provided with a brake*.

SEE OR SEARCH THIS CLASS, SUBCLASS:

173, for a transmission including an eccentric type planetary gear set having plural planetary elements braked.

**272 With preselection:**

This subclass is indented under subclass 271. Subject matter including a first manual controller actuatable to select a desired speed ratio*



U.S. Well - Exhibit 2026
Liberty v. U.S. Well - IPR2025-00778
Page 58 of 70

and a second manual controller effective to engage the said desired speed ratio*.

SEE OR SEARCH CLASS:
477, Interrelated Power Delivery Controls, Including Engine Control, wherein a second manual controller may be a motor control, such as an accelerator pedal.

**273 Axis of planet pinion at angle to axis of mating gear (e.g., bevel gears):**
This subclass is indented under subclass 271. Subject matter wherein the planetary gear transmission includes a planet pinion* having a rotational axis extending at an angle with respect to the rotational axis of an intermeshing gear.

SEE OR SEARCH THIS CLASS, SUBCLASS:
9, 190+, 197, 230+, 251+, 306+, and 336, for related subject matter.

**274 And additional planetary gearset having axis of pinion parallel to axis of mating gear:**
This subclass is indented under subclass 273. Subject matter which includes another planetary gear transmission which has a planet pinion* with a rotational axis extending in a direction parallel to a rotational axis of an intermeshing gear.

**275 Transmission includes three relatively rotatable sun gears:**
This subclass is indented under subclass 271. Subject matter wherein said assemblage includes at least three sun gears* which are relatively rotatable.

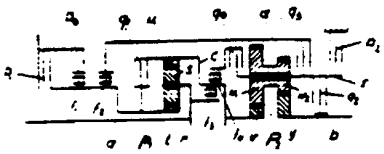

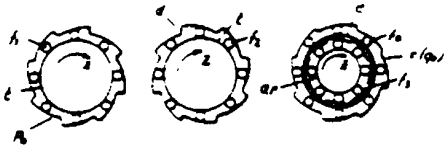

**276 With brake for sun, carrier and orbit:**
This subclass is indented under subclass 275. Subject matter wherein one of said elements provided with a brake* is one of said sun gears*; and two other of said elements provided with a brake are a planet carrier* and an orbit gear*.

SEE OR SEARCH THIS CLASS, SUBCLASS:
54, for this combination with a fluid drive in one of plural paths.

**277 With brake for plural sun gears:**
This subclass is indented under subclass 275. Subject matter wherein at least two of said sun gears* are provided with a brake*.

**278 And brake for carrier:**
This subclass is indented under subclass 277. Subject matter which further includes a brake* for a planet carrier*.

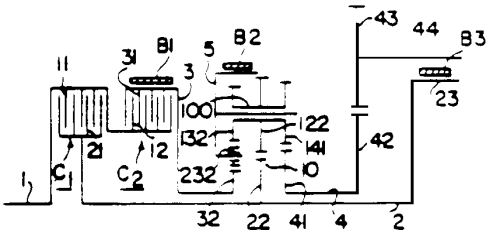


SEE OR SEARCH THIS CLASS, SUBCLASS:
56, for this combination with a fluid drive in one of plural paths.

**279 With brake for plural orbits:**
This subclass is indented under subclass 275. Subject matter wherein at least two orbit gears* are provided with a brake*.



U.S. Well - Exhibit 2026
Liberty v. U.S. Well - IPR2025-00778
Page 59 of 70

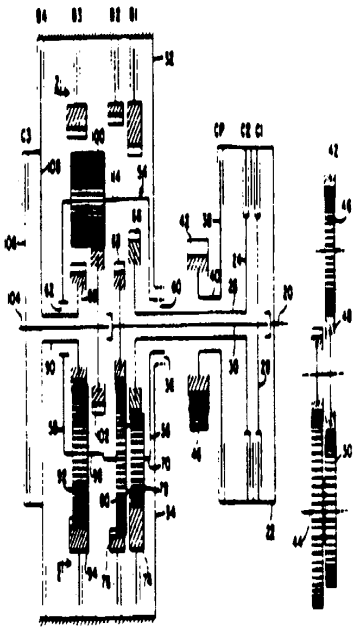

SEE OR SEARCH THIS CLASS, SUBCLASS:
58, for this combination with a fluid drive in one of plural paths.

**280 Brake for sun, carrier and orbit:**
This subclass is indented under subclass 271. Subject matter wherein said elements which are provided with a brake*, a sun gear*, a planet carrier* and an orbit gear*.

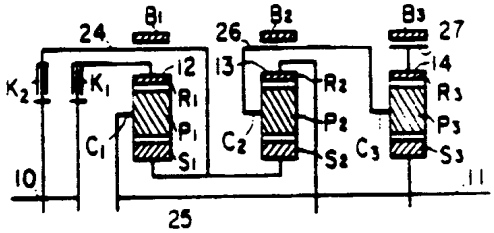


SEE OR SEARCH THIS CLASS, SUBCLASS:
54, for this combination with a fluid drive in one of plural paths.

**281 Including one-way clutch or brake:**
This subclass is indented under subclass 280. Subject matter wherein one-way clutch* or a one-way brake* is in a drive train* including said assemblage.

**282 Brake for sun and orbit:**
This subclass is indented under subclass 271. Subject matter wherein said elements which are provided with a brake* are a sun gear* and an orbit gear*.

SEE OR SEARCH THIS CLASS, SUBCLASS:
55, for this combination with a fluid drive in one of plural paths.

**283 Including one-way clutch or brake:**
This subclass is indented under subclass 282. Subject matter wherein a one-way clutch* or a one-way brake* is in a drive train* including said assemblage.

**284 Brake for sun and carrier:**
This subclass is indented under subclass 271. Subject matter wherein said elements which are provided with a brake* are a sun gear* and a planet carrier*.

SEE OR SEARCH THIS CLASS, SUBCLASS:
56, for this combination with a fluid drive in one of plural paths.

**285 Including one-way clutch or brake:**
This subclass is indented under subclass 284. Subject matter wherein a one-way clutch* or a one-way brake* is in a drive including said assemblage.

**286 Brake for orbit and carrier:**
This subclass is indented under subclass 271. Subject matter wherein said elements which are provided with a brake* are an orbit gear* and a planet carrier*.

SEE OR SEARCH THIS CLASS, SUBCLASS:
57, for this combination with a fluid drive in one of plural paths.



U.S. Well - Exhibit 2026
Liberty v. U.S. Well - IPR2025-00778
Page 60 of 70

**287 Including one-way clutch or brake:**
This subclass is indented under subclass 286. Subject matter wherein a one-way clutch* or a one-way brake* is in a drive train* including said assemblage.

**288 Plural suns braked:**
This subclass is indented under subclass 271. Subject matter wherein said elements which are provided with a brake* are at least two sun gears*.

SEE OR SEARCH THIS CLASS, SUBCLASS:
47, for this combination with a fluid drive in one of plural paths.

**289 Including one-way clutch or brake:**
This subclass is indented under subclass 288. Subject matter wherein a one-way clutch* or a one-way brake* is in a drive train* including said assemblage.

**290 Plural orbits braked:**
This subclass is indented under subclass 271. Subject matter wherein said elements which are provided with a brake* are at least two orbit gears*.

SEE OR SEARCH THIS CLASS, SUBCLASS:
58, for this combination with a fluid drive in one of plural paths.

**291 Including one-way clutch or brake:**
This subclass is indented under subclass 290. Subject matter wherein a one-way clutch* or a one-way brake* is in a drive train* including said assemblage.

**292 Including one-way clutch or brake:**
This subclass is indented under subclass 271. Subject matter wherein a one-way clutch* or a one-way brake* is in a drive train including said assemblage.

**293 Speed responsive clutch or brake:**
This subclass is indented under subclass 269. Subject matter wherein a drive train* includes a clutch* having mechanism for controlling the coupling of two parts in response to the velocity of one of the parts; or which includes a brake* which controls a moving part in response to its velocity.

(1) Note. Patents in this subclass are directed to a speed responsive brake* or clutch* in a drive train in advance of, or after a planetary gear transmission.

SEE OR SEARCH THIS CLASS, SUBCLASS:
254+, and see the search notes therein for condition responsive control of a planetary gear transmission.

SEE OR SEARCH CLASS:
192, Clutches and Power-Stop Control, subclasses 3.51+ for a combination of transmission control and clutch control; and 215+ for a combination of transmission control and brake.

**294 Ratio shift initiated by reverse rotation of input shaft:**
This subclass is indented under subclass 269. Subject matter wherein an input shaft is rotated in a first direction during both of said ratios*; and wherein means are provided for operating said ratio changing device by limited movement of said input shaft in a direction opposite to said first direction.

SEE OR SEARCH CLASS:
192, Clutches and Power-Stop Control, subclasses 217.1+ for related subject matter combined with a back-pedaling brake.

**295 Plural outputs:**
This subclass is indented under subclass 269. Subject matter which includes means to drive at least two load devices*.

SEE OR SEARCH THIS CLASS, SUBCLASS:
332, and see the search notes therein for related subject matter.

**296 Plural drive ratios other than unity:**
This subclass is indented under subclass 269. Subject matter wherein said different speed ratios are two overdrives*, or two underdrives*, or an underdrive* and an overdrive*.



U.S. Well - Exhibit 2026
Liberty v. U.S. Well - IPR2025-00778
Page 61 of 70

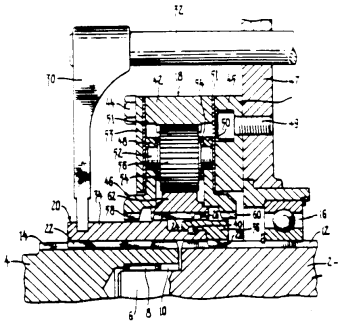

ring gear fixed to frame; output; input

SEE OR SEARCH THIS CLASS, SUBCLASS:
271+, for plural drive ratios obtained by selectively braking plural elements.

**297 Including one-way clutch or brake:**
This subclass is indented under subclass 296. Subject matter wherein a one-way clutch* or a one-way brake* is included in said ratio changing device.

**298 Gear shiftable axially to disconnect or vary ratio:**
This subclass is indented under subclass 269. Subject matter wherein said ratio changing device or said disconnecting means includes mechanism operable to move a gear of a planetary gear transmission in a direction parallel to the axis of rotation of the gear.

**299 Orbit shiftable relative to sun and carrier:**
This subclass is indented under subclass 298. Subject matter wherein an orbit gear* is movable axially with respect to a stationary sun gear* and planet carrier*.

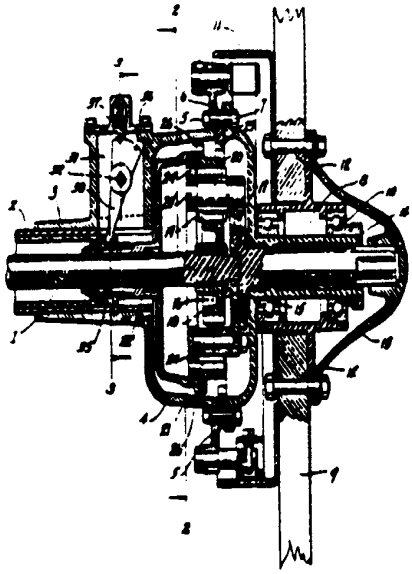

**300 Sun shiftable relative to orbit and carrier:**
This subclass is indented under subclass 298. Subject matter wherein a sun gear* is movable axially with respect to a relatively stationary orbit gear* and planet carrier*.

**301 Brake or clutch on surface of helically coiled member:**
This subclass is indented under subclass 269. Subject matter wherein a helically coiled resilient device has a frictional surface which expands or contracts into engagement with two relatively movable members to function as a clutch*, or which expand or contracts into engagement with a moveable and stationary member to function as a brake*.

SEE OR SEARCH CLASS:
188, Brakes, for, per se.
192, Clutches and Power-Stop Control, subclass 41 for this type clutch.

**302 Nonplanetary gearing combined with planetary:**
This subclass is indented under subclass 269. Subject matter wherein a part of a drive train* leading to or from a planetary gear transmission includes nonplanetary gearing associated therewith.



U.S. Well - Exhibit 2026
Liberty v. U.S. Well - IPR2025-00778
Page 62 of 70

SEE OR SEARCH THIS CLASS, SUBCLASS:
343, and see the search notes therein for related subject matter.

**303 With synchronizing clutch or brake:**
This subclass is indented under subclass 269. Subject matter wherein a clutch* includes friction members to couple relatively moving parts to gradually achieve common rotation prior to positive coupling by intermeshing parts; or wherein a brake* includes friction members to gradually couple a rotating part to a stationary part prior to positive coupling by intermeshing parts.

SEE OR SEARCH THIS CLASS, SUBCLASS:
67, and see the search notes therein for related subject matter.

**304 Planet pinion is worm gear:**
This subclass is indented under subclass 269. Subject matter including a planetary gear transmission in which a planet pinion is a worm gear*.

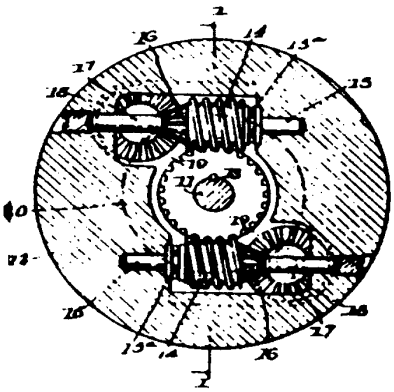

SEE OR SEARCH THIS CLASS, SUBCLASS:
7, 226+, and 333, for related subject matter.

**305 Including releasable clutch directly between planet pinion and carrier:**
This subclass is indented under subclass 269. Subject matter including a clutch* acting between a planet pinion* and a planet carrier*.

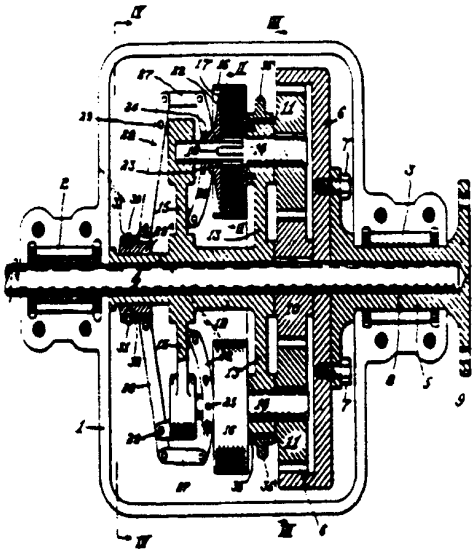

SEE OR SEARCH THIS CLASS, SUBCLASS:
96, 108, 109+, and 233, for related subject matter.

**306 Brake for planetary transmission having axis of planet pinion at angle to axis of mating gear (e.g., bevel gears):**
This subclass is indented under subclass 269. Subject matter wherein a drive train* includes a planetary gear transmission which comprises a planet pinion* having a rotational axis extending at an angle with respect to the rotational axis of an intermeshing gear; and wherein one of said speed ratios* is provided by applying a brake* to one element of said planetary gear transmission.

SEE OR SEARCH THIS CLASS, SUBCLASS:
9, 190+, 197, 230+, 251, 273+, and 336, for related subject matter.

**307 Including one-way clutch or brake:**
This subclass is indented under subclass 306. Subject matter wherein said drive train* is provided with a one-way clutch* or a one-way brake*.



U.S. Well - Exhibit 2026
Liberty v. U.S. Well - IPR2025-00778
Page 63 of 70

**308 And lock-up clutch:**
This subclass is indented under subclass 306. Subject matter wherein of another said speed ratios is a unitary drive* which is provided by engaging a clutch*.

**309 Friction clutch:**
This subclass is indented under subclass 308. Subject matter wherein said clutch* is of a type in which pressure and resultant friction between faces of two relatively movable parts causes the parts to have common movement.

**310 Plate clutch:**
This subclass is indented under subclass 309. Subject matter in which said relatively moveable parts are in the form of discs.

**311 Sun braked:**
This subclass is indented under subclass 269. Subject matter wherein a drive train* includes a planetary gear transmission, and wherein one of said speed ratios* is provided by applying a brake* to a sun gear* of said planetary gear transmission.

**312 Including one-way clutch or brake:**
This subclass is indented under subclass 311. Subject matter wherein said drive-train* is provided with one-way clutch* or a one-way brake.

**313 Intermeshing planet pinions on single carrier:**
This subclass is indented under subclass 311. Subject matter wherein said planetary gear transmission includes a planet carrier* for a plurality of planet pinions*, said planet pinions* having gear teeth which intermesh with each other.

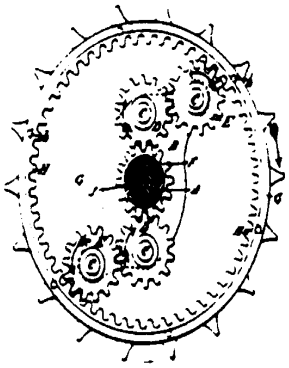

**314 And lock-up clutch:**
This subclass is indented under subclass 311. Subject matter wherein another of said speed ratios* is a unitary drive* which is provided by engaging a clutch*.

**315 Friction clutch:**
This subclass is indented under subclass 314. Subject matter wherein said clutch* is of a type in which pressure and resultant friction between faces of two relatively moveable parts causes the parts to have common movement.

**316 Plate clutch:**
This subclass is indented under subclass 315. Subject matter in which said relatively movable parts are in the form of discs.

**317 Orbit braked:**
This subclass is indented under subclass 269. Subject matter wherein a drive train* includes a planetary gear transmission, and wherein one of said speed ratios* is provided by applying a brake* to an orbit gear* of said planetary gear transmission.

**318 Including one-way clutch or brake:**
This subclass is indented under subclass 317. Subject matter wherein said drive-train* is provided with a one-way clutch* or a one-way brake*.

**319 Intermeshing planet pinion on single carrier:**
This subclass is indented under subclass 317. Subject matter wherein said planetary gear transmission includes a planet carrier* for a



U.S. Well - Exhibit 2026
Liberty v. U.S. Well - IPR2025-00778
Page 64 of 70

plurality of planet pinions* said planet pinions* having gear teeth which intermesh with each other.

**320 And lock-up clutch:**
This subclass is indented under subclass 317. Subject matter wherein another of said speed ratios* is a unitary drive* which is provided by engaging a clutch*.

**321 Friction clutch:**
This subclass is indented under subclass 320. Subject matter wherein said clutch* is of a type in which pressure and resultant friction between faces of two relatively moveable parts causes the parts to have common movement.

**322 Plate clutch:**
This subclass is indented under subclass 321. Subject matter in which said relatively movable parts are in the form of discs.

**323 Carrier braked:**
Subject matter under 269 wherein a drive train* includes a planetary gear transmission, and wherein one of said speed ratios* is provided by applying a brake* to a planet carrier* of said planetary gear transmission.

**324 Including one-way clutch or brake:**
This subclass is indented under subclass 323. Subject matter wherein said drive train* is provided with a one-way clutch* or a one-way brake*.

**325 Intermeshing planet pinions on single carrier:**
This subclass is indented under subclass 323. Subject matter wherein said planetary gear transmission includes a planet carrier* for a plurality of planet pinions*, said planet pinion*, having gear teeth which intermesh with each other.

**326 And lock-up clutch:**
This subclass is indented under subclass 323. Subject matter wherein another of said speed ratios is a unitary drive* which is provided by engaging a clutch*.

**327 Friction clutch:**
This subclass is indented under subclass 326. Subject matter wherein said clutch* is of a type in which pressure and resultant friction between faces of two relatively moveable parts cause the parts to have common movement.

**328 Plate clutch:**
This subclass is indented under subclass 327. Subject matter in which said relatively moveable parts are in the form of discs.

**329 PLURAL POWER PATHS TO PLANETARY GEARING:**
This subclass is indented under the class definition. Subject matter wherein rotational force from a power source* is split into at least two paths prior to reaching a planetary gear transmission; one of said paths providing rotational input power to a first element of the planetary gear transmission, and the other of said paths providing rotational input power to a second element of said planetary gear transmission.

SEE OR SEARCH THIS CLASS, SUBCLASS:
1+, 18+, 35+, 47+, 72+, 171, 211+, 215+, and 218, for related subject matter.
343, for similar art where there may be plural power paths extending from the planetary transmission.

**330 Plural planetary units:**
This subclass is indented under subclass 329. Subject matter which includes at least two planetary gear transmissions.

**331 PLANETARY GEARING OR ELEMENT:**
This subclass is indented under the class definition. Subject matter including a planetary gear transmission or a device particularly adapted to be used with said planetary gear transmission.

**332 Plural outputs:**
This subclass is indented under subclass 331. Subject matter including means to drive at least two load devices*.

SEE OR SEARCH THIS CLASS, SUBCLASS:
6, 15, 18+, 74, 174, 184, 220+, and 295, for related subject matter.

SEE OR SEARCH CLASS:
74, Machine Element or Mechanism, subclasses 11+ and 665+ for other plural output transmissions.



U.S. Well - Exhibit 2026
Liberty v. U.S. Well - IPR2025-00778
Page 65 of 70

180, Motor Vehicles, subclasses 53.1+ for power take-offs including significant vehicle structure.

**333 Planet pinion is worm gear:**
This subclass is indented under subclass 331. Subject matter wherein a planet pinion* of said planetary gear transmission is a worm gear*.

SEE OR SEARCH THIS CLASS, SUBCLASS:
7, 226+ and 304, for related subject matter.

**334 Floating support annulus in rolling contact with planet pinion:**
This subclass is indented under subclass 331. Subject matter which includes a ring surrounding the rotational axis of a planet carrier* and free to move with respect to said carrier; said ring contacting a smooth surface on a plurality of planet pinions* spaced about said planet carrier to aid in supporting said planet pinions.

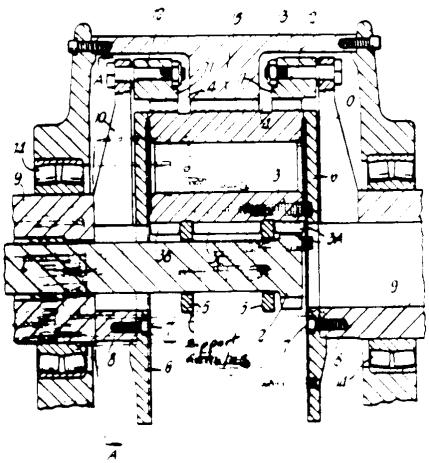

**335 Toothed planet pinion has smooth bearing surface engaging raceway on sun or orbit gear:**
This subclass is indented under subclass 331. Subject matter including a planet pinion* having gear teeth which intermesh with gear teeth on a sun gear* or on an orbit gear*; said planet pinion* being also provided with a smooth circular surface for engagement with a mating smooth circular surface on said sun gear* or orbit gear* to guide said planet pinion* in its travel path about said sun gear* or orbit gear*.

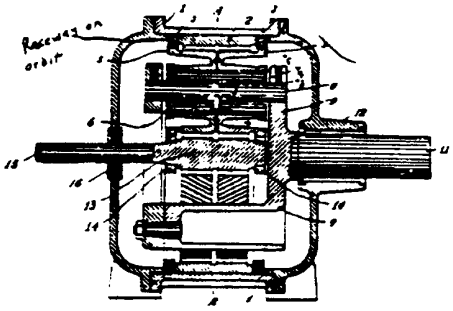

**336 Axis of planet pinion at angle intersecting rotational axis of mating gear (e.g., bevel gears):**
This subclass is indented under subclass 331. Subject matter wherein said planetary gear transmission includes a planet pinion* having a rotational axis which extends at an angle of with respect to the rotational axis of a gear which meshes with said planet pinion.

SEE OR SEARCH THIS CLASS, SUBCLASS:
9, 190+, 197, 230+, 251, 273+, and 306+, for related subject matter.

**337 Plural planet carriers in series move at different speeds:**
This subclass is indented under subclass 331. Subject matter including a plurality of planet carriers*, the output power of one of said planet carriers providing input power to the other of said planet carriers; and wherein the rotational velocity of one of said planet carriers is different than the other.



U.S. Well - Exhibit 2026
Liberty v. U.S. Well - IPR2025-00778
Page 66 of 70

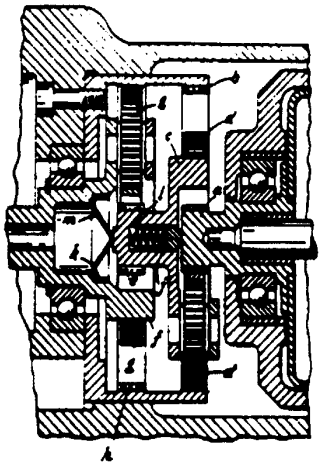

**338 Coaxial teeth around planet pinion engage axially spaced relatively rotatable gears:**
This subclass is indented under subclass 331. Subject matter wherein a planet pinion* has an elongated set of gear teeth or plural axially spaced sets of gear teeth; said teeth of said planet pinion meshing with at least two gears rotatable with respect to each other and spaced from each other in a direction parallel to the rotational axis of the gears.

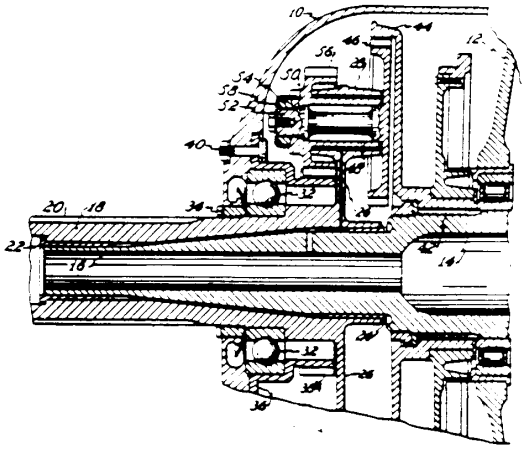

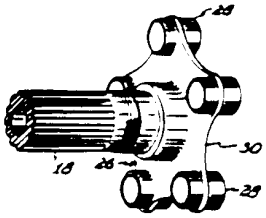

**339 Engage plural relatively rotatable sun gears:**
This subclass is indented under subclass 338. Subject matter wherein said two gears are sun gears*.

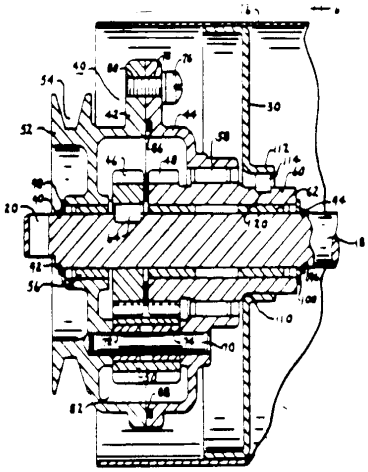

**340 And orbit gear:**
This subclass is indented under subclass 339. Subject matter which also includes an orbit gear* meshing with said planet pinion*.



U.S. Well - Exhibit 2026
Liberty v. U.S. Well - IPR2025-00778
Page 67 of 70

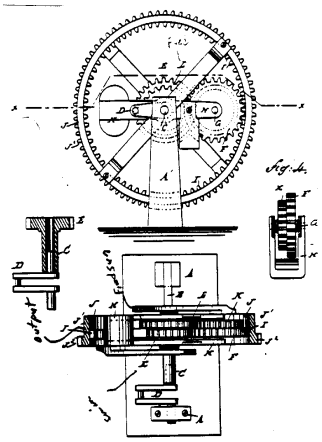

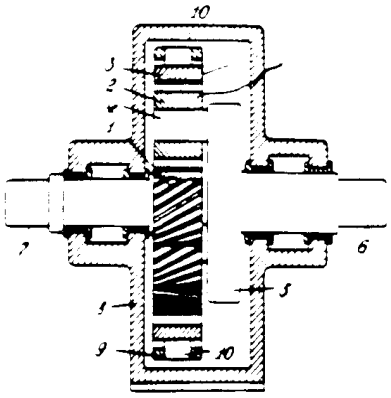

**341 Engage plural relatively rotatable orbit gears:**
This subclass is indented under subclass 338. Subject matter wherein said two gears are orbit gears*.

**342 And sun gear:**
This subclass is indented under subclass 341. Subject matter which also includes a sun gear* meshing with said planet pinion*.

**343 Nonplanetary gearing combined with planetary:**
This subclass is indented under subclass 331. Subject matter wherein a part of a drive train* leading to or from said planetary gear transmission includes non-planetary gearing associated therewith.

SEE OR SEARCH THIS CLASS, SUBCLASS:
52, 66, 198+, 207+, 225, and 302, for related subject matter.
329+, for this combination where there is provided two power paths to the planetary transmission.

**344 Particular gear tooth feature:**
This subclass is indented under subclass 331. Subject matter wherein significance is attributed to the shape of a gear tooth, or to the material from which a gear tooth is formed.

oblique teeth

SEE OR SEARCH THIS CLASS, SUBCLASS:
180, for related subject matter.

SEE OR SEARCH CLASS:
74, Machine Element or Mechanism, subclasses 457+ for related subject matter.

**345 Nonmetallic or resilient:**
This subclass is indented under subclass 344. Subject matter wherein said gear tooth is formed of a flexible material or of a material other than metal.

SEE OR SEARCH THIS CLASS, SUBCLASS:
180, for related subject matter.

**346 Floating or flexible coupling or support:**
This subclass is indented under subclass 331. Subject matter wherein one of the gears in said planetary gear transmission is moveable in an axial or radial, nonrotary, direction with respect to another of the gears to accommodate proper alignment of the gears; or which include connecting means between two shaft elements in a drive train* which permits a limited amount of relative movement between said shaft elements or permits rotation of said shaft elements when they are misaligned or angularly related; or which provides a flexible support for said planetary gear transmission; or which provides a resilient connection between a gear and its supporting or driving member.



U.S. Well - Exhibit 2026
Liberty v. U.S. Well - IPR2025-00778
Page 68 of 70

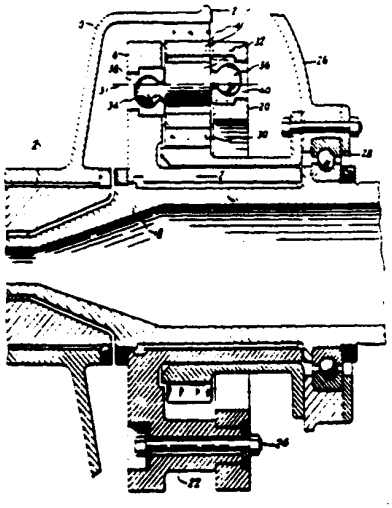

floating planet

SEE OR SEARCH THIS CLASS, SUBCLASS:
202, and 222, for related subject matter.

SEE OR SEARCH CLASS:
464, Rotary Shafts Gudgeons Housing, and Flexible Couplings for Rotary Shafts etc., for flexible couplings, per se.

**347 Resilient member:**
This subclass is indented under subclass 346. Subject matter which provides a resilient connection between a gear and its supporting or driving member.

SEE OR SEARCH THIS CLASS, SUBCLASS:
92, for planetary reaction element having a fluid damper.

**348 Planet pinion supported by roller bearings:**
This subclass is indented under subclass 331. Subject matter wherein a planet pinion* is supported for rotation by ball bearings or by cylindrical bearings surrounding the axis of the planet pinion.

SEE OR SEARCH THIS CLASS, SUBCLASS:
246+, and 253, for related subject matter.

**349 With manual input:**
This subclass is indented under subclass 331. Subject matter wherein a power source* for driving said planetary gear transmission is human force.

SEE OR SEARCH THIS CLASS, SUBCLASS:
3+, for related subject matter.

CROSS-REFERENCE ART COLLECTIONS

**900 BRAKE FOR INPUT OR OUTPUT SHAFT:**
This subclass is indented under the class definition. A collection of patents relating to structure for applying a brake* to an input member* or to an output member*.

SEE OR SEARCH THIS CLASS, SUBCLASS:
18+, and 224, for output shaft brakes* used in steering by driving combinations.
68, and 175, for brakes* in combination with the drives of those subclasses.
113, for fluid brakes* that may act on an input member*, or output member.

SEE OR SEARCH CLASS:
188, Brakes, for brakes in general.
192, Clutches and Power-Stop Control, subclasses 215+ for combined transmission control and brake.
477, Interrelated Power Delivery Controls, Including Engine Control, for interrelated control between an engine and a transmission, clutch, or brake.

**901 PARTICULAR MATERIAL:**
This subclass is indented under the class definition. A collection of patents wherein significance is attributed to a special kind of material used in a planetary gear transmission.

SEE OR SEARCH THIS CLASS, SUBCLASS:
85, 180, and 344+, for related subject matter.

**902 Nonmetallic:**
This subclass is indented under subclass 901. A collection of patents wherein the material is a material other than metal.



U.S. Well - Exhibit 2026
Liberty v. U.S. Well - IPR2025-00778
Page 69 of 70

SEE OR SEARCH THIS CLASS, SUBCLASS:

85, 180 and 344+, for related subject matter.

**903 STACKED PLANETARY GEARING:**

This subclass is indented under the class definition. A collection of patents relating to structure wherein first and second sun gears* are arranged so that the second sun gear is located radially outwardly from the first sun gear; and both sun gears are in a common plane bisecting the rotational axis of the sun gears.

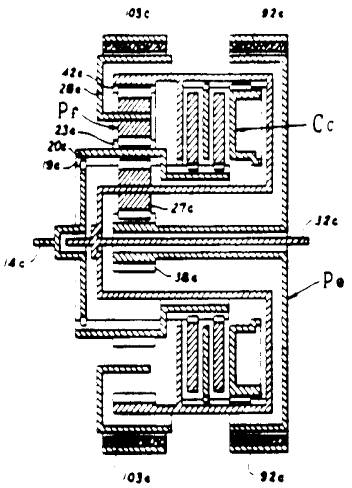


**904 PARTICULAR MATHEMATICAL EQUATION:**

This subclass is indented under the class definition. A collection of patents wherein significance is attributed to using a mathematical equation to compute a structural or operational feature of planetary gear transmission.

END



U.S. Well - Exhibit 2026
Liberty v. U.S. Well - IPR2025-00778
Page 70 of 70