3GPP TS 36.300 V8.0.0 (2007-03)

Technical Specification

3rd Generation Partnership Project; Technical Specification Group Radio Access Network; Evolved Universal Terrestrial Radio Access (E-UTRA) and Evolved Universal Terrestrial Radio Access Network (E-UTRAN); Overall description; Stage 2 (Release 8)

The present document has been developed within the 3rd Generation Partnership Project (3GPP TM) and may be further elaborated for the purposes of 3GPP.

The present document has not been subject to any approval process by the 3GPP Organizational Partners and shall not be implemented.
This Specification is provided for future development work within 3GPP only. The Organizational Partners accept no liability for any use of this Specification.
Specifications and reports for implementation of the 3GPP TM system should be obtained via the 3GPP Organizational Partners' Publications Offices.

Keywords
UMTS, stage 2, radio, architecture

3GPP

Postal address

3GPP support office address
650 Route des Lucioles - Sophia Antipolis
Valbonne - FRANCE
Tel.: +33 4 92 94 42 00 Fax: +33 4 93 65 47 16

Internet
http://www.3gpp.org

Copyright Notification

No part may be reproduced except as authorized by written permission.
The copyright and the foregoing restriction extend to reproduction in all media.

© 2007, 3GPP Organizational Partners (ARIB, ATIS, CCSA, ETSI, TTA, TTC).
All rights reserved.

Contents

Foreword 8
1 Scope 9
2 References 9
3 Definitions, symbols and abbreviations 9
3.1 Definitions 9
3.2 Abbreviations 10
4 Overall architecture 11
4.1 Functional Split 12
4.2 Interfaces 13
4.2.1 S1 Interface 13
4.2.2 X2 Interface 13
4.3 Radio Protocol architecture 13
4.3.1 User plane 13
4.3.2 Control plane 14
5 Physical Layer for E-UTRA 15
5.1 Downlink Transmission Scheme 15
5.1.1 Basic transmission scheme based on OFDM 15
5.1.2 Physical-layer processing 16
5.1.3 Physical downlink control channel 16
5.1.4 Downlink Reference signal 16
5.1.5 Downlink multi-antenna transmission 17
5.1.6 MBSFN transmission 17
5.1.7 Physical layer procedure 17
5.1.7.1 Link adaptation 17
5.1.7.2 Power Control 17
5.1.7.3 Cell search 17
5.1.8 Physical layer measurements definition 17
5.2 Uplink Transmission Scheme 18
5.2.1 Basic transmission scheme 18
5.2.2 Physical-layer processing 18
5.2.3 Physical uplink control channel 19
5.2.4 Uplink Reference signal 19
5.2.5 Random access preamble 19
5.2.6 Uplink multi-antenna transmission 19
5.2.7 Physical channel procedure 20
5.2.7.1 Link adaptation 20
5.2.7.2 Uplink Power control 20
5.2.7.3 Uplink timing control 20
5.3 Transport Channels 20
5.3.1 Mapping between transport channels and physical channels 21
5.4 E-UTRA physical layer model 22
5.4.1 Physical-layer model of E-UTRA transport channels 22
5.4.1.1 Downlink-Shared Channel 22
5.4.1.2 Broadcast Channel 23
5.4.1.3 Paging Channel 24
5.4.1.4 Multicast Channel 26
5.4.1.5 Uplink Shared Channel 27
5.4.1.6 Random-access Channel 28
5.4.2 Physical-layer indications 28
5.4.2.1 Error indicators 28
5.4.2.2 Channel-quality indicators 28
6 Layer 2 28
6.1 MAC Sublayer 30

ONEPLUS EXHIBIT 1015
Page 3 of 82

6.1.1 Services and Functions ... 30
6.1.2 Logical Channels ... 30
6.1.2.1 Control Channels ... 30
6.1.2.2 Traffic Channels ... 31
6.1.3 Mapping between logical channels and transport channels ... 31
6.1.3.1 Mapping in Uplink ... 31
6.1.3.2 Mapping in Downlink ... 31
6.2 RLC Sublayer ... 32
6.2.1 Services and Functions ... 32
6.2.2 PDU Structure ... 33
6.3 PDCP Sublayer ... 33
6.3.1 Services and Functions ... 33
6.3.2 PDU Structure ... 34
6.4 Data flows through Layer 2 ... 34

7 RRC ... 34
7.1 Services and Functions ... 34
7.2 RRC protocol states & state transitions ... 35
7.3 Transport of NAS messages ... 36
7.4 System Information ... 36
7.5 RRC Procedures ... 37

8 E-UTRAN identities ... 37
8.1 E-UTRAN related UE identities ... 37
8.2 Network entity related Identities ... 37

9 ARQ and HARQ ... 38
9.1 HARQ principles ... 38
9.2 ARQ principles ... 38
9.3 HARQ/ARQ interactions ... 38

10 Mobility ... 39
10.1 Intra E-UTRAN ... 39
10.1.1 Mobility Management in LTE_IDLE ... 39
10.1.1.1 Cell selection ... 39
10.1.1.2 Cell reselection ... 40
10.1.1.3 Handling in eNB ... 41
10.1.1.4 Handling above eNB ... 41
10.1.1.5 Mobility Management Entity (MME) ... 41
10.1.2 Mobility Management in LTE_ACTIVE ... 41
10.1.2.1 Handover ... 41
10.1.2.1.1 C-plane handling ... 41
10.1.2.1.2 U-plane handling ... 43
10.1.2.2 Path Switch ... 44
10.1.2.3 Data forwarding ... 44
10.1.2.4 Handling in eNB ... 44
10.1.2.5 Handling above eNB ... 44
10.1.2.6 Mobility Management Entity (MME) ... 44
10.1.2.7 Timing Advance ... 44
10.1.3 Measurements ... 44
10.1.3.1 Neighbour cell measurements within the serving frequency layer ... 45
10.1.3.2 Neighbour cell measurements of other frequency layers ... 45
10.1.4 Paging and C-plane establishment ... 45
10.1.5 Random Access Procedure ... 45
10.1.6 Radio Link Failure ... 47
10.1.7 Radio Access Network Sharing ... 48
10.1.8 Handling of Roaming and Area Restrictions for UEs in LTE_ACTIVE ... 48
10.2 Inter RAT ... 48
10.2.1 Cell reselection ... 49
10.2.2 Handover ... 49
10.2.3 Measurements ... 49
10.2.3.1 Inter-RAT handovers from E-UTRAN ... 49
10.2.3.2 Inter-RAT handovers to E-UTRAN ... 49

ONEPLUS EXHIBIT 1015
Page 4 of 82

10.2.3.3 Inter-RAT cell reselection from E-UTRAN ... 50
10.2.3.4 Limiting measurement load at UE ... 50
10.2.4 Network Aspects ... 50
10.3 Inter 3GPP access system mobility ... 50
10.3.1 Cell reselection ... 50
10.3.2 Handover ... 50
10.3.3 Measurements ... 50
10.4 Area Restrictions ... 50

11 Scheduling and Rate Control ... 50
11.1 Basic Scheduler Operation ... 51
11.2 Signalling of Scheduler Decisions ... 52
11.3 Measurements to Support Scheduler Operation ... 52
11.4 Rate Control of GBR, MBR, and AMBR ... 52
11.4.1 Downlink ... 52
11.4.2 Uplink ... 52

12 DRX in RRC_CONNECTED ... 53

13 QoS ... 53
13.1 QoS concept and bearer service architecture ... 53
13.2 Resource establishment and QoS signalling ... 54

14 Security ... 54
14.1 Overview and Principles ... 54
14.2 Security termination points ... 54

15 MBMS ... 55
15.1 MBMS control & functions ... 55
15.2 MBMS transmission ... 55

16 Radio Resource Management aspects ... 55
16.1 RRM functions ... 55
16.1.1 Radio Bearer Control (RBC) ... 55
16.1.2 Radio Admission Control (RAC) ... 55
16.1.3 Connection Mobility Control (CMC) ... 56
16.1.4 Dynamic Resource Allocation (DRA) - Packet Scheduling (PS) ... 56
16.1.5 Inter-cell Interference Coordination (ICIC) ... 56
16.1.6 Load Balancing (LB) ... 56
16.1.7 Inter-RAT Radio Resource Management ... 56
16.2 RRM architecture ... 57
16.2.1 Centralised Handling of certain RRM Functions ... 57
16.2.2 De-Centralised RRM ... 57
16.2.3 Load balancing control ... 57

17 RF aspects ... 57
17.1 Spectrum deployments ... 57

18 UE capabilities ... 57

19 S1 Interface ... 57
19.1 S1 User plane ... 57
19.2 S1 Control Plane ... 58
19.2.1 S1 Interface Functions ... 58
19.2.1.1 S1 Paging function ... 59
19.2.1.2 S1 UE Context Management function ... 59
19.2.1.3 Initial Context Setup Function ... 59
19.2.2 S1 Interface Signalling Procedures ... 59
19.2.2.1 Paging procedure ... 60
19.2.2.2 S1 UE Context Release procedure ... 60
19.2.2.2.1 S1 UE Context Release (EPC triggered) ... 60
19.2.2.2.2 S1 UE Context Release Request (eNB triggered) ... 60
19.2.2.3 Initial Context Setup procedure ... 61

ONEPLUS EXHIBIT 1015
Page 5 of 82

20 X2 Interface 62
20.1 User Plane 62
20.2 Control Plane 62
20.2.1 X2-CP Functions 62
20.2.2 X2-CP Procedures 62

21 System and Terminal complexity 63
21.1 Overall System complexity 63
21.2 Physical layer complexity 63
21.3 UE complexity 63

22 Support for self-configuration and self-optimisation 63
22.1 Definitions 63

23 Others 65
23.1 Support for real time IMS services 65

Annex A (informative): NAS Overview 66

A.1 Services and Functions 66

A.2 NAS protocol states & state transitions 66

Annex B (informative): MAC and RRC Control 68

B.1 Difference between MAC and RRC control 68

B.2 Classification of MAC and RRC control functions 68

Annex C (informative): System Information 69

C.1 SI classification 69
C.1.1 Information valid across multiple cells 69
C.1.2 Information needed at cell/PLMN search 69
C.1.3 Information needed prior to cell camping 70
C.1.4 Information needed prior to cell access 70
C.1.5 Information needed while camping on a cell 71
C.1.6 Thoughts about category division 72

C.2 Division of SI between static and flexible parts 72
C.2.1 Static part 72
C.2.2 Flexible part 73
C.2.3 Information whose location is FFS 74
C.2.4 Dedicated part 74

Annex D (informative): MBMS 75
D.1 MBMS control & functions 75
D.2 MBMS transmission 75
D.3 Deployment Scenarios 76

Annex E (informative): Drivers for Mobility Control 77
E.1 Drivers 77
E.1.1 Best radio condition 78
E.1.2 Camp load balancing 78
E.1.3 Traffic load balancing 78
E.1.4 UE capability 78
E.1.5 Hierarchical cell structures 78
E.1.6 Network sharing 79
E.1.7 Private networks/home cells 79
E.1.8 Subscription based mobility control 79
E.1.9 Service based mobility control 79
E.1.10 MBMS 79
E.2 Limitations for mobility control 79
E.2.1 UE battery saving 79
E.2.2 Network signalling/processing load 80
E.2.3 U-plane interruption and data loss 80

ONEPLUS EXHIBIT 1015
Page 6 of 82

E.2.4 OAM complexity 80

Annex F (informative): Change history.....81

ONEPLUS EXHIBIT 1015
Page 7 of 82

Foreword

This Technical Specification has been produced by the 3rd Generation Partnership Project (3GPP).

The contents of the present document are subject to continuing work within the TSG and may change following formal TSG approval. Should the TSG modify the contents of the present document, it will be re-released by the TSG with an identifying change of release date and an increase in version number as follows:

Version x.y.z

where:

- x the first digit:
  - 1 presented to TSG for information;
  - 2 presented to TSG for approval;
  - 3 or greater indicates TSG approved document under change control.
- y the second digit is incremented for all changes of substance, i.e. technical enhancements, corrections, updates, etc.
- z the third digit is incremented when editorial only changes have been incorporated in the document.

ONEPLUS EXHIBIT 1015
Page 8 of 82

1 Scope

The present document provides an overview and overall description of the E-UTRAN radio interface protocol architecture. Details of the radio interface protocols will be specified in companion specifications of the 36 series.

2 References

The following documents contain provisions which, through reference in this text, constitute provisions of the present document.

- References are either specific (identified by date of publication, edition number, version number, etc.) or non-specific.
- For a specific reference, subsequent revisions do not apply.
- For a non-specific reference, the latest version applies. In the case of a reference to a 3GPP document (including a GSM document), a non-specific reference implicitly refers to the latest version of that document *in the same Release as the present document*.

[1] 3GPP TR 21.905: "Vocabulary for 3GPP Specifications".

[2] 3GPP TR 25.913: "Requirements for Evolved UTRA (E-UTRA) and Evolved UTRAN (E-UTRAN)"

[3] 3GPP TS 36.201: "Evolved Universal Terrestrial Radio Access (E-UTRA); Physical layer; General description".

[4] 3GPP TS 36.211 Evolved Universal Terrestrial Radio Access (E-UTRA); Physical Channels and Modulation .

[5] 3GPP TS 36.212 Evolved Universal Terrestrial Radio Access (E-UTRA); Multiplexing and channel coding .

[6] 3GPP TS 36.213 Evolved Universal Terrestrial Radio Access (E-UTRA); Physical layer procedures .

[7] 3GPP TS 36.214 Evolved Universal Terrestrial Radio Access (E-UTRA); Physical layer; Measurements

3 Definitions, symbols and abbreviations

3.1 Definitions

For the purposes of the present document, the following terms and definitions apply.

Carrier frequency: center frequency of the cell.

MBMS-dedicated cell: cell dedicated to MBMS transmission.

Frequency layer: set of cells with the same carrier frequency.

Handover: procedure that changes the serving cell of a UE in RRC_CONNECTED.

Unicast/MBMS-mixed cell: cell supporting both unicast and MBMS transmissions.

ONEPLUS EXHIBIT 1015
Page 9 of 82

3.2 Abbreviations

For the purposes of the present document, the abbreviations given in TR 21.905 [1] and the following apply. An abbreviation defined in the present document takes precedence over the definition of the same abbreviation, if any, in TR 21.905 [1].

ACK	Acknowledgement
ACLR	Adjacent Channel Leakage Ratio
AM	Acknowledge Mode
AMBR	Aggregate Maximum Bit Rate
ARQ	Automatic Repeat Request
AS	Access Stratum
BCCH	Broadcast Control Channel
BCH	Broadcast Channel
C/I	Carrier-to-Interference Power Ratio
CAZAC	Constant Amplitude Zero Auto-Correlation
CMC	Connection Mobility Control
CP	Cyclic Prefix
C-plane	Control Plane
CQI	Channel Quality Indicator
CRC	Cyclic Redundancy Check
DCCH	Dedicated Control Channel
DL	Downlink
DRX	Discontinuous Reception
DTCH	Dedicated Traffic Channel
DTX	Discontinuous Transmission
eNB	E-UTRAN NodeB
EPC	Evolved Packet Core
E-UTRA	Evolved UTRA
E-UTRAN	Evolved UTRAN
FDD	Frequency Division Duplex
FDM	Frequency Division Multiplexing
GERAN	GSM EDGE Radio Access Network
GNSS	Global Navigation Satellite System
GSM	Global System for Mobile communication
GBR	Guaranteed Bit Rate
HARQ	Hybrid ARQ
HO	Handover
HSDPA	High Speed Downlink Packet Access
ICIC	Inter-Cell Interference Coordination
IP	Internet Protocol
LB	Load Balancing
LCR	Low Chip Rate
LTE	Long Term Evolution
MAC	Medium Access Control
MBMS	Multimedia Broadcast Multicast Service
MBR	Maximum Bit Rate
MCCH	Multicast Control Channel
MCS	Modulation and Coding Scheme
MIMO	Multiple Input Multiple Output
MME	Mobility Management Entity
MTCH	MBMS Traffic Channel
NACK	Non-Acknowledgement
NAS	Non-Access Stratum
OFDM	Orthogonal Frequency Division Multiplexing
OFDMA	Orthogonal Frequency Division Multiple Access
PA	Power Amplifier
PAPR	Peak-to-Average Power Ratio
PBR	Prioritised Bit Rate
PCCH	Paging Control Channel
PDCP	Packet Data Convergence Protocol
PDU	Packet Data Unit

ONEPLUS EXHIBIT 1015
Page 10 of 82

PHY	Physical layer
PLMN	Public Land Mobile Network
PRB	Physical Resource Block
PSC	Packet Scheduling
QAM	Quadrature Amplitude Modulation
QoS	Quality of Service
RAC	Radio Admission Control
RACH	Random Access Channel
RAT	Radio Access Technology
RB	Radio Bearer
RBC	Radio Bearer Control
RF	Radio Frequency
RLC	Radio Link Control
RNL	Radio Network Layer
ROHC	Robust Header Compression
RRC	Radio Resource Control
RRM	Radio Resource Management
RU	Resource Unit
S1-MME	S1 for the control plane
S1-U	S1 for the user plane
SAE	System Architecture Evolution
SAP	Service Access Point
SC-FDMA	Single Carrier – Frequency Division Multiple Access
SCH	Synchronization Channel
SDMA	Spatial Division Multiple Access
SDU	Service Data Unit
SFN	Single Frequency Network
SU	Scheduling Unit
TA	Tracking Area
TB	Transport Block
TCP	Transmission Control Protocol
TDD	Time Division Duplex
TM	Transparent Mode
TNL	Transport Network Layer
TTI	Transmission Time Interval
UE	User Equipment
UL	Uplink
UM	Un-acknowledge Mode
UMTS	Universal Mobile Telecommunication System
U-plane	User plane
UTRA	Universal Terrestrial Radio Access
UTRAN	Universal Terrestrial Radio Access Network
VRB	Virtual Resource Block
X2-C	X2-Control plane
X2-U	X2-User plane

4 Overall architecture

The E-UTRAN consists of eNBs, providing the E-UTRA user plane (PDCP/RLC/MAC/PHY) and control plane (RRC) protocol terminations towards the UE. The eNBs are interconnected with each other by means of the X2 interface. The eNBs are also connected by means of the S1 interface to the EPC (Evolved Packet Core), more specifically to the MME (Mobility Management Entity) by means of the S1-MME and to the SAE Gateway by means of the S1-U. The S1 interface supports a many-to-many relation between MMEs / SAE Gateways and eNBs.

The EUTRAN architecture is illustrated in Figure 4 below.

ONEPLUS EXHIBIT 1015
Page 11 of 82

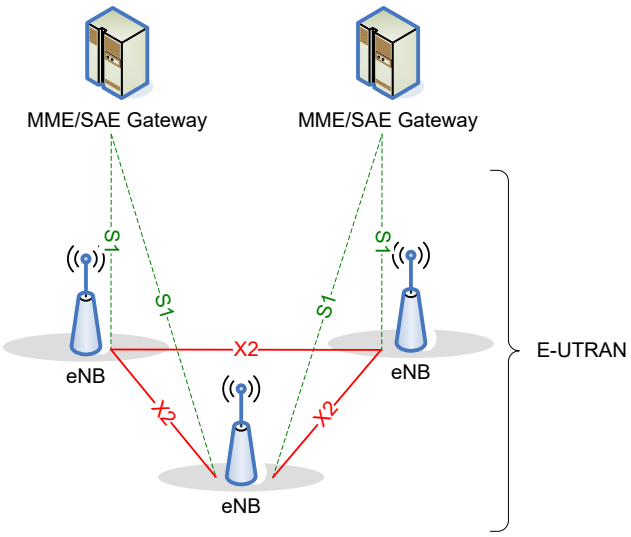

Figure 4: Overall Architecture

4.1 Functional Split

The eNB hosts the following functions:

- Functions for Radio Resource Management: Radio Bearer Control, Radio Admission Control, Connection Mobility Control, Dynamic allocation of resources to UEs in both uplink and downlink (scheduling);
- IP header compression and encryption of user data stream;
- Selection of an MME at UE attachment;

NOTE: it is assumed, that at UE attachment, firstly the MME is involved, i.e. actually the MME is selected.

- Routing of User Plane data towards SAE Gateway;

NOTE: it is FFS which node actually establishes the User Plane tunnel.

NOTE: it is FFS whether User Plane tunnel establishment takes place together with the RRC activation.

- Scheduling and transmission of paging messages (originated from the MME);
- Scheduling and transmission of broadcast information (originated from the MME or O&M);
- Measurement and measurement reporting configuration for mobility and scheduling.

The MME hosts the following functions:

- Distribution of paging messages to the eNBs;
- Security control;
- Idle state mobility control;
- SAE bearer control;
- Ciphering and integrity protection of NAS signalling.

The SAE Gateway hosts the following functions:

- Termination of U-plane packets for paging reasons (FFS);
- Switching of U-plane for support of UE mobility.

ONEPLUS EXHIBIT 1015
Page 12 of 82

This is summarized on the figure below where yellow boxes depict the logical nodes, white boxes depict the functional entities of the control plane and blue boxes depict the radio protocol layers.

NOTE: it is assumed that a logical E-UTRAN node in addition to the eNB is not needed for RRM purposes. Moreover, due to the different usage of inter-cell RRM functionalities, each inter-cell RRM functionality should be considered separately in order to assess whether it should be handled in a centralised manner or in a distributed manner.

NOTE: MBMS related functions in E-UTRAN are described separately in subclause 15.

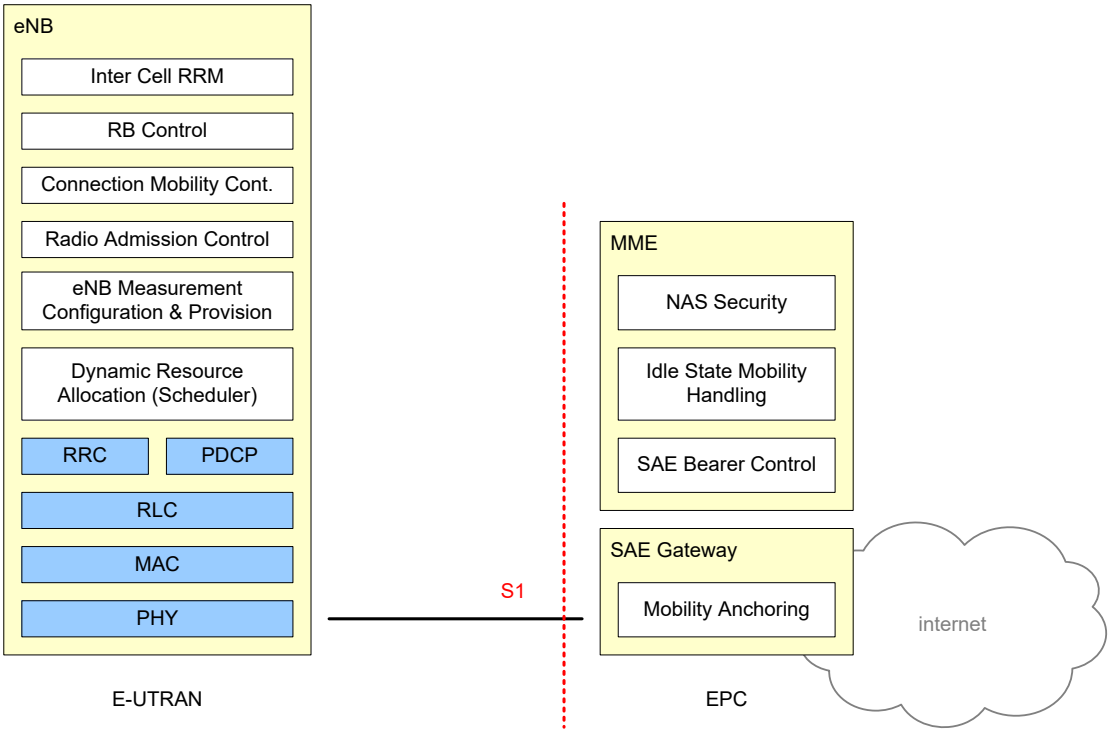

Figure 4.1: Functional Split between E-UTRAN and EPC

4.2 Interfaces

4.2.1 S1 Interface

4.2.2 X2 Interface

4.3 Radio Protocol architecture

In this subclause, the radio protocol architecture of E-UTRAN is given for the user plane and the control plane.

4.3.1 User plane

The figure below shows the protocol stack for the user-plane, where PDCP, RLC and MAC sublayers (terminated in eNB on the network side) perform the functions listed in subclause 6, e.g. header compression, ciphering, scheduling, ARQ and HARQ;

ONEPLUS EXHIBIT 1015
Page 13 of 82

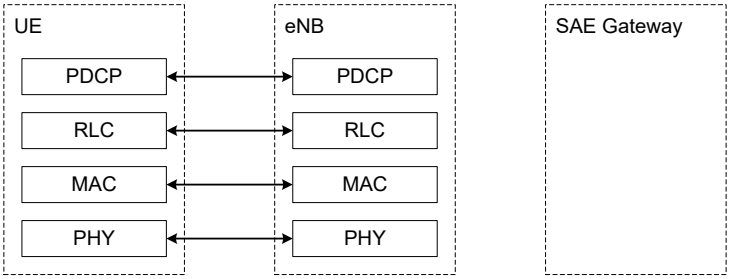

Figure 4.3.1: User-plane protocol stack

4.3.2 Control plane

The figure below shows the protocol stack for the control-plane, where:

- RLC and MAC sublayers (terminated in eNB on the network side) perform the same functions as for the user plane;
- RRC (terminated in eNB on the network side) performs the functions listed in subclause 7, e.g.:
  - Broadcast;
  - Paging;
  - RRC connection management;
  - RB control;
  - Mobility functions;
  - UE measurement reporting and control.
- NAS control protocol (terminated in MME on the network side) performs among other things:
  - SAE bearer management;
  - Authentication;
  - LTE_IDLE mobility handling;
  - Paging origination in LTE_IDLE;
  - Security control.

NOTE: the NAS control protocol is not covered by the scope of this TS and is only mentioned for information.

Note: It is FFS whether PDCP is part of the control plane.

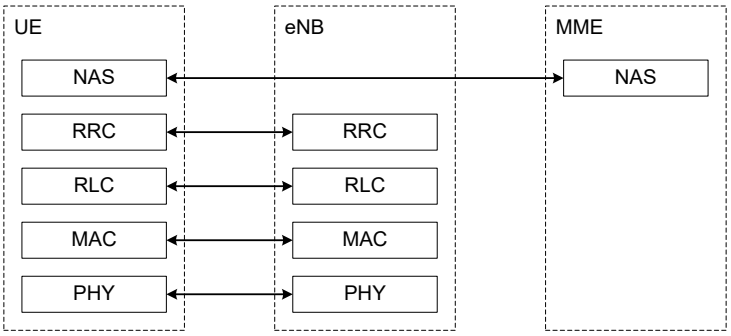

Figure 4.3.2: Control-plane protocol stack

ONEPLUS EXHIBIT 1015
Page 14 of 82

5 Physical Layer for E-UTRA

The generic frame structure is illustrated in Figure 5.1-1. Each 10 ms radio frame is divided into ten equally sized sub-frames. Each sub-frame consists of two equally sized slots. Each sub-frame can be assigned for either downlink or uplink transmission [*there are certain restrictions in the assignment as the first and sixth sub-frame of each frame include the downlink synchronization signals*]

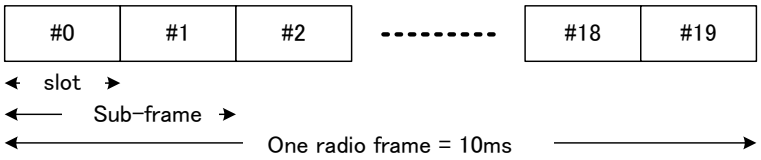

Figure 5.1-1: Generic frame structure

In addition, for coexistence with LCR-TDD, an alternative frame structure illustrated in Figure 5.1-2 is also supported when operating E-UTRA in TDD mode.

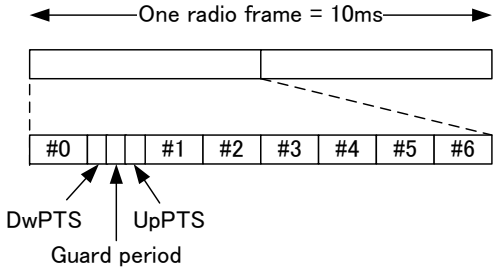

Figure 5.1-2: alternative frame structure

5.1 Downlink Transmission Scheme

5.1.1 Basic transmission scheme based on OFDM

The downlink transmission scheme is based on conventional OFDM using a cyclic prefix. The OFDM sub-carrier spacing is Δf = 15 kHz. 12 consecutive sub-carriers during one slot correspond to one downlink *resource block*. In the frequency domain, the number of resource blocks, N_{RB}, can range from $N_{RB\text{-}min}$ = 6 to $N_{RB\text{-}max}$ = [110].

In addition there is also a reduced sub-carrier spacing Δf_{low} = 7.5 kHz, only for MBMS-dedicated cell.

In the case of 15 kHz sub-carrier spacing there are two cyclic-prefix lengths, corresponding to seven and six OFDM symbols per slot respectively.

- Normal cyclic prefix: $T_{CP} = 160\times Ts$ (OFDM symbol #0) , $T_{CP} = 144\times Ts$ (OFDM symbol #1 to #6)
- Extended cyclic prefix: $T_{CP\text{-}e} = 512\times Ts$ (OFDM symbol #0 to OFDM symbol #5)

  where $T_s = 1/(2048 \times \Delta f)$

In case of 7.5 kHz sub-carrier spacing, there is only a single cyclic prefix length $T_{CP\text{-}low} = 1024\times Ts$, corresponding to 3 OFDM symbols per slot.

In case of FDD, operation with half duplex from UE point of view is supported.

For operation in unpaired spectrum with generic frame structure, DL/UL switching points are generated by not transmitting in certain symbols while idle periods, required by the Node B at UL/DL switching points are created using time advance mechanism. For the alternative frame structure, the cyclic prefix length, in case of 15 kHz sub-carrier spacing, is

ONEPLUS EXHIBIT 1015
Page 15 of 82

- Normal cyclic prefix: T_{CP} = 224×Ts (OFDM symbol #0 to #8)
- Extended cyclic prefix: $T_{CP\text{-}e}$ = 512×Ts (OFDM symbol #0 to #7)

5.1.2 Physical-layer processing

The downlink physical-layer processing of transport channels consists of the following steps:

- CRC insertion: 24 bit CRC is the baseline for PDSCH;
- Channel coding: Turbo coding based on QPP inner interleaving with trellis termination;
- Physical-layer hybrid-ARQ processing;
- Channel interleaving;
- Scrambling: transport-channel specific scrambling on DL-SCH, BCH, and PCH. Common MCH scrambling for all cells involved in a specific MBSFN transmission;
- Modulation: QPSK, 16QAM, and 64QAM;
- Layer mapping and pre-coding;
- Mapping to assigned resources and antenna ports.

5.1.3 Physical downlink control channel

The downlink control signalling is located in the first *n* OFDM symbols where $n \leq 3$ and consists of:

- Transport format, resource allocation, and hybrid-ARQ information related to DL-SCH, and PCH;
- Uplink scheduling grant;
- ACK/NAK in response to uplink transmission.

Transmission of control signalling from these groups is mutually independent, e.g., ACK/NAK can be transmitted to a UE regardless of whether the same UE is receiving scheduling information or not.

Multiple physical downlink control channels are supported and a UE monitors a set of control channels.

Control channels are formed by aggregation of control channel elements, each control channel element consisting of a set of resource elements. Different code rates for the control channels are realized by aggregating different numbers of control channel elements.

QPSK modulation is used for all control channels.

Each separate control channel has its own set of x-RNTI.

There is an implicit relation between the uplink resources used for dynamically scheduled data transmission, or the DL control channel used for assignment, and the downlink ACK/NAK resource used for feedback

5.1.4 Downlink Reference signal

The downlink reference signals consist of known reference symbols inserted in the first and third last OFDM symbol of each slot. There is one reference signal transmitted per downlink antenna port. The number of downlink antenna ports equals 1, 2, or 4. The two-dimensional reference signal sequence is generated as the symbol-by-symbol product of a two-dimensional orthogonal sequence and a two-dimensional pseudo-random sequence. There are 3 different two-dimensional orthogonal sequences and 170 different two-dimensional pseudo-random sequences. Each cell identity corresponds to a unique combination of one orthogonal sequence and one pseudo-random sequence, thus allowing for 510 unique cell identities 170 cell identity groups with 3 cell identities in each group).

Frequency hopping can be applied to the downlink reference signals. The frequency hopping pattern has a period of one frame (10 ms). Each frequency hopping pattern corresponds to one cell identity group.

ONEPLUS EXHIBIT 1015
Page 16 of 82

The downlink MBSFN reference signals consist of known reference symbols inserted every other sub-carrier in the 3rd, 7th and 11th OFDM symbol of sub-frame in case of 15kHz sub-carrier spacing and extended cyclic prefix

5.1.5 Downlink multi-antenna transmission

Multi-antenna transmission with 2 and 4 transmit antennas is supported. The maximum number of codeword is two irrespective to the number of antennas with fixed mapping between code words to layers.

Spatial division multiplexing (SDM) of multiple modulation symbol streams to a single UE using the same time-frequency (-code) resource, also referred to as Single-User MIMO (SU-MIMO) is supported. When a MIMO channel is solely assigned to a single UE, it is known as SU-MIMO. Spatial division multiplexing of modulation symbol streams to different UEs using the same time-frequency resource, also referred to as MU-MIMO, is also supported. There is semi-static switching between SU-MIMO and MU-MIMO per UE.

In addition, the following techniques are supported:

- Code-book-based pre-coding with a single pre-coding feedback per full system bandwidth when the system bandwidth (or subset of resource blocks) is smaller or equal to12RB and per 5 adjacent resource blocks or the full system bandwidth (or subset of resource blocks) when the system bandwidth is larger than 12RB.
- Rank adaptation with single rank feedback referring to full system bandwidth. Node B can override rank report.

5.1.6 MBSFN transmission

MBSFN is supported for the MCH transport channel. Multiplexing of transport channels using MBSFN and non-MBSFN transmission is done on a per-sub-frame basis. Additional reference symbols, transmitted using MBSFN are transmitted within MBSFN subframes.

5.1.7 Physical layer procedure

5.1.7.1 Link adaptation

Link adaptation (AMC: adaptive modulation and coding) with various modulation schemes and channel coding rates is applied to the shared data channel. The same coding and modulation is applied to all groups of resource blocks belonging to the same L2 PDU scheduled to one user within one TTI and within a single stream.

5.1.7.2 Power Control

Downlink power control can be used.

5.1.7.3 Cell search

Cell search is the procedure by which a UE acquires time and frequency synchronization with a cell and detects the Cell ID of that cell. E-UTRA cell search supports a scalable overall transmission bandwidth corresponding to 72 sub-carriers and upwards.

E-UTRA cell search is based on following signals transmitted in the downlink: the primary and secondary synchronization signals, the downlink reference signals.

The primary and secondary synchronization signals are transmitted over the centre 72 sub-carriers in the first and sixth subframe of each frame.

Neighbour-cell search is based on the same downlink signals as initial cell search.

5.1.8 Physical layer measurements definition

The physical layer measurements to support mobility are classified as:

- within E-UTRAN (intra-frequency, inter-frequency);
- between E-UTRAN and GERAN/UTRAN (inter-RAT).

ONEPLUS EXHIBIT 1015
Page 17 of 82

For measurements within E-UTRAN at least two basic UE measurement quantities shall be supported:

- Reference symbol received power (RSRP);
- E-UTRA carrier received signal strength indicator (RSSI).

5.2 Uplink Transmission Scheme

5.2.1 Basic transmission scheme

For both FDD and TDD, the uplink transmission scheme is based on single-carrier FDMA, more specifically DFTS-OFDM.

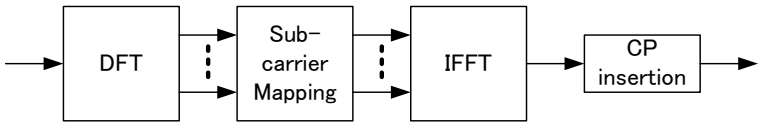

Figure 5.2.1: Transmitter scheme of SC-FDMA

The uplink sub-carrier spacing Δf = 15 kHz. The sub-carriers are grouped into sets of 12 consecutive sub-carriers, corresponding to the uplink resource blocks. 12 consecutive sub-carriers during one slot correspond to one uplink *resource block*. In the frequency domain, the number of resource blocks, N_{RB}, can range from $N_{RB\text{-}min}$ = 6 to $N_{RB\text{-}max}$ = [110].

There are two cyclic-prefix lengths defined: Normal cyclic prefix and extended cyclic prefix corresponding to seven and six SC-FDMA symbol per slot respectively.

- Normal cyclic prefix: T_{CP} = 160×Ts (SC-FDMA symbol #0) , T_{CP} = 144×Ts (SC-FDMA symbol #1 to #6)
- Extended cyclic prefix: $T_{CP\text{-}e}$ = 512×Ts (SC-FDMA symbol #0 to SC-FDMA symbol #5)

Correspondingly, for the alternative frame structure, the cyclic prefix length is listed in table 5.2

Table 5.2: Cyclic prefix length for alternative frame structure

<table>
<tr><th rowspan="3">l</th><th colspan="4">Normal cyclic prefix</th><th colspan="4">Extended cyclic prefix</th></tr>
<tr><th colspan="2">$N_{BW}^{UL} \le 300$</th><th colspan="2">$300 < N_{BW}^{UL}$</th><th colspan="2">$N_{BW}^{UL} \le 300$</th><th colspan="2">$300 < N_{BW}^{UL}$</th></tr>
<tr><th>$N_{CP,l}$</th><th>N_d</th><th>$N_{CP,l}$</th><th>N_d</th><th>$N_{CP,l}$</th><th>N_d</th><th>$N_{CP,l}$</th><th>N_d</th></tr>
<tr><td>0</td><td>320</td><td>2048</td><td>224</td><td>2048</td><td>560</td><td>2048</td><td>472</td><td>2048</td></tr>
<tr><td>1</td><td rowspan="9">192</td><td>1024</td><td rowspan="9">204</td><td>1024</td><td rowspan="8">423</td><td>1024</td><td rowspan="8">456</td><td>1024</td></tr>
<tr><td>2</td><td rowspan="6">2048</td><td rowspan="6">2048</td><td rowspan="6">2048</td><td rowspan="6">2048</td></tr>
<tr><td>3</td></tr>
<tr><td>4</td></tr>
<tr><td>5</td></tr>
<tr><td>6</td></tr>
<tr><td>7</td><td>1024</td><td>1024</td></tr>
<tr><td>8</td><td>1024</td><td>1024</td><td>2048</td><td>2048</td></tr>
<tr><td>9</td><td>2048</td><td>2048</td></tr>
</table>

5.2.2 Physical-layer processing

The uplink physical layer processing of transport channels consists of the following steps:

- CRC insertion: 24 bit CRC is the baseline for PUSCH;
- Channel coding: turbo coding based on QPP inner interleaving with trellis termination;
- Physical-layer hybrid-ARQ processing;

ONEPLUS EXHIBIT 1015
Page 18 of 82

- Scrambling: UE-specific scrambling;
- Modulation: QPSK, 16QAM, and 64QAM (optional in UE);
- Mapping to assigned resources [*and antennas*].

5.2.3 Physical uplink control channel

The PUCCH shall be mapped to a control channel resource in the uplink. A control channel resource is defined by a code and two resource blocks, consecutive in time, with hopping at the slot boundary.

Depending on presence or absence of uplink timing synchronization, the uplink physical control signalling can differ.

In the case of time synchronization being present, the outband control signalling consists of:

- CQI;
- ACK/NAK;
- Scheduling request.

The CQI informs the scheduler about the current channel conditions as seen by the UE. If MIMO transmission is used, the CQI includes necessary MIMO-related feedback.

The HARQ feedback in response to downlink data transmission consists of a single ACK/NAK bit per HARQ process.

5.2.4 Uplink Reference signal

Uplink reference signals [for channel estimation for coherent demodulation] are transmitted in the 4-th block of the slot [*assumed normal CP*]. The uplink reference signals sequence length equals the size (number of sub-carriers) of the assigned resource.

The uplink reference signals are based on [*prime-length*] Zadoff-chu sequences that are either truncated or cyclically extended to the desired length

Multiple reference signals can be created:

- Based on different Zadoff-Chu sequence from the same set of Zadoff-Chu sequences;
- Different shifts of the same sequence.

5.2.5 Random access preamble

The physical layer random access burst consists of a cyclic prefix, a preamble, and a guard time during which nothing is transmitted.

The random access preambles are generated from Zadoff-Chu sequences with zero correlation zone, ZC-ZCZ, generated from one or several root Zadoff-Chu sequences.

5.2.6 Uplink multi-antenna transmission

The baseline antenna configuration for uplink MIMO is MU-MIMO. To allow for MU-MIMO reception at the Node B, allocation of the same time and frequency resource to several UEs, each of which transmitting on a single antenna, is supported.

Closed loop type adaptive antenna selection transmit diversity shall be supported for FDD (optional in UE).

ONEPLUS EXHIBIT 1015
Page 19 of 82

5.2.7 Physical channel procedure

5.2.7.1 Link adaptation

Uplink link adaptation is used in order to guarantee the required minimum transmission performance of each UE such as the user data rate, packet error rate, and latency, while maximizing the system throughput.

Three types of link adaptation are performed according to the channel conditions, the UE capability such as the maximum transmission power and maximum transmission bandwidth etc., and the required QoS such as the data rate, latency, and packet error rate etc. Three link adaptation methods are as follows.

- Adaptive transmission bandwidth;
- Transmission power control;
- Adaptive modulation and channel coding rate.

5.2.7.2 Uplink Power control

Intra-cell power control: the power spectral density of the uplink transmissions can be influenced by the eNB.

5.2.7.3 Uplink timing control

The timing advance is derived from the UL received timing and sent by the eNB to the UE which the UE uses to advance/delay its timings of transmissions to the eNB so as to compensate for propagation delay and thus time align the transmissions from different UEs with the receiver window of the eNB.

The timing advance command is on a per need basis with a granularity in the step size of 0.52 μs ($16 \times T_s$).

5.3 Transport Channels

The physical layer offers information transfer services to MAC and higher layers. The physical layer transport services are described by *how* and with what characteristics data are transferred over the radio interface. An adequate term for this is “Transport Channel”.

NOTE: This should be clearly separated from the classification of *what* is transported, which relates to the concept of logical channels at MAC sublayer.

Downlink transport channel types are:

1. **Broadcast Channel (BCH)** characterised by:
   - fixed, pre-defined transport format;
   - requirement to be broadcast in the entire coverage area of the cell.
2. **Downlink Shared Channel (DL-SCH)** characterised by:
   - support for HARQ;
   - support for dynamic link adaptation by varying the modulation, coding and transmit power;
   - possibility to be broadcast in the entire cell;
   - possibility to use beamforming;
   - support for both dynamic and semi-static resource allocation;
   - support for UE discontinuous reception (DRX) to enable UE power saving;
   - support for MBMS transmission (FFS).

NOTE: the possibility to use slow power control depends on the physical layer.

ONEPLUS EXHIBIT 1015
Page 20 of 82

3. **Paging Channel (PCH)** characterised by:
   - support for UE discontinuous reception (DRX) to enable UE power saving (DRX cycle is indicated by the network to the UE);
   - requirement to be broadcast in the entire coverage area of the cell;
   - mapped to physical resources which can be used dynamically also for traffic/other control channels.
4. **Multicast Channel (MCH)** characterised by:
   - requirement to be broadcast in the entire coverage area of the cell;
   - support for SFN combining of MBMS transmission on multiple cells;
   - support for semi-static resource allocation e.g. with a time frame of a long cyclic prefix.

Uplink transport channel types are:

1. **Uplink Shared Channel (UL-SCH)** characterised by:
   - possibility to use beamforming; (likely no impact on specifications)
   - support for dynamic link adaptation by varying the transmit power and potentially modulation and coding;
   - support for HARQ;
   - support for both dynamic and semi-static resource allocation.

NOTE: the possibility to use uplink synchronisation and timing advance depend on the physical layer.

2. **Random Access Channel(s) (RACH)** characterised by:
   - limited control information;
   - collision risk;

NOTE: the possibility to use open loop power control depends on the physical layer solution.

5.3.1 Mapping between transport channels and physical channels

The figures below depict the mapping between transport and physical channels (in grey the items for FFS):

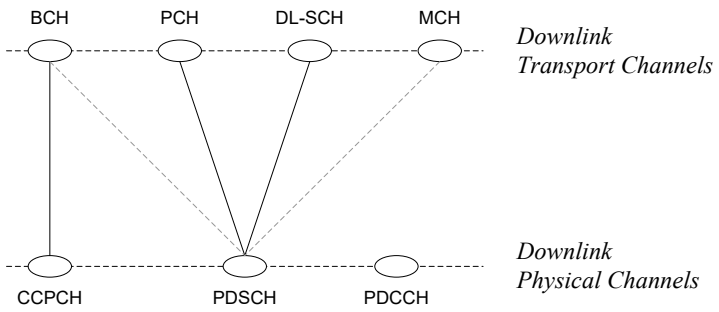

Figure 5.3.1-1: Mapping between downlink transport channels and downlink physical channels

ONEPLUS EXHIBIT 1015
Page 21 of 82

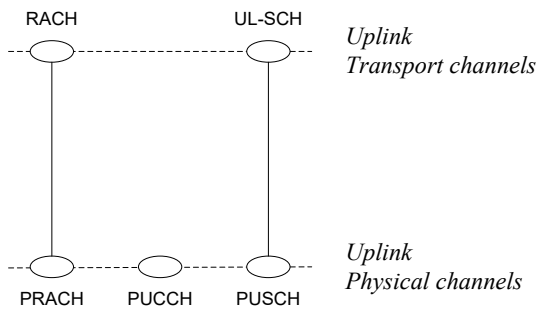

Figure 5.3.1-2: Mapping between uplink transport channels and uplink physical channels

5.4 E-UTRA physical layer model

The E-UTRA physical-layer model captures those characteristics of the E-UTRA physical-layer that are relevant from the point-of-view of higher layers. More specifically, the physical-layer model captures:

- The structure of higher-layer data being passed down to or up from the physical layer;
- The means by which higher layers can configure the physical layer;
- The different indications (error indications, channel-quality indications, etc.) that are provided by the physical layer to higher layers;
- Other (non-transport-channel-based) higher-layer peer-to-peer signalling supported by the physical layer.

5.4.1 Physical-layer model of E-UTRA transport channels

5.4.1.1 Downlink-Shared Channel

The DL-SCH physical-layer model is described based on the corresponding DL-SCH physical-layer-processing chain, see Figure 5.4.1.1. Processing steps that are relevant for the physical-layer model, e.g. in the sense that they are configurable by higher layers, are highlighted in blue on the figure.

- **Higher-layer data passed to/from the physical layer**
  - N (at least up to two) transport blocks of dynamic size delivered to the physical layer once every TTI.
- **CRC and transport-block-error indication**
  - Transport-block-error indication delivered to higher layers.
- **FEC and rate matching**
  - Channel coding rate is implicitly given by the combination of transport block size, modulation scheme and resource assignment;
  - Physical layer model support of HARQ: in case of Incremental Redundancy, the corresponding Layer 2 Hybrid-ARQ process controls what redundancy version is to be used for the physical layer transmission for each TTI.
- **Interleaving**
  - No control of interleaving by higher layers.
- **Data modulation**
  - Modulation scheme is decided by MAC Scheduler (QPSK, 16QAM and 64 QAM).
- **Mapping to resource blocks**

ONEPLUS EXHIBIT 1015
Page 22 of 82

  - L2-controlled resource assignment.

- **Physical-layer processing Step 6: Multi-antenna processing**

  - MAC Scheduler partly configures mapping from assigned resource blocks (for each stream) to the available number of antenna ports.

- **Support for Hybrid-ARQ-related signalling**

  The model of Figure 5.4.1.1 also captures:

  - Transport via physical layer of Hybrid-ARQ related information associated with the DL-SCH, to the peer HARQ process at the receiver side;

  - Transport via physical layer of corresponding HARQ acknowledgements to DL-SCH transmitter side.

NOTE: The signalling of transport-format and resource-allocation is not captured in the physical-layer model. At the transmitter side, this information can be directly derived from the configuration of the physical layer. The physical layer then transports this information over the radio interface to its peer physical layer, presumably multiplexed in one way or another with the HARQ-related information. On the receiver side, this information is, in contrast to the HARQ-related information, used directly within the physical layer for DL-SCH demodulation, decoding etc., without passing through higher layers.

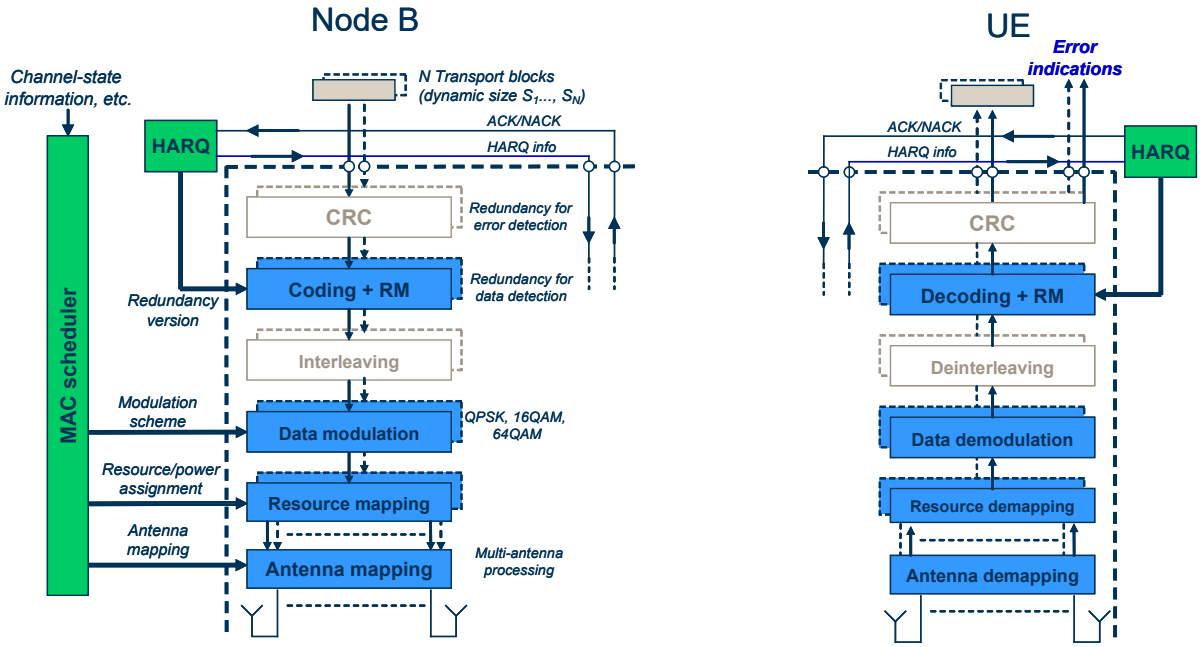

Figure 5.4.1.1: DL-SCH physical-layer model

When carrying information related to PCCH or BCCH, the L1/L2 control channel may need to be more robust (FFS).

5.4.1.2 Broadcast Channel

The BCH transport channel is characterized by a fixed pre-defined transport format. The TTI (repetition rate) of the BCH is FFS. The BCH physical-layer model is described based on the corresponding BCH physical-layer-processing chain, see Figure 5.4.1.2:

- **Higher-layer data passed to/from the physical layer**

  - A single (fixed-size) transport block per TTI.

- **CRC and transport-block-error indication**

  - Transport-block-error indication delivered to higher layers.

ONEPLUS EXHIBIT 1015
Page 23 of 82

- **FEC and rate matching**
  - Channel coding rate is implicitly given by the combination of transport block size, modulation scheme and resource assignment;
  - No BCH Hybrid ARQ, i.e. no higher-layer control of redundancy version.
- **Interleaving**
  - No control of interleaving by higher layers.
- **Data modulation**
  - Fixed modulation scheme (QPSK), i.e. not higher-layer control.
- **Mapping to resource blocks**
  - Fixed pre-determined transport format and resource allocation, i.e. no higher-layer control.
- **Physical-layer processing Step 6: Multi-antenna processing**
- Fixed pre-determined processing, i.e. no higher-layer control.
- **Support for Hybrid-ARQ-related signalling**
  - No Hybrid ARQ.

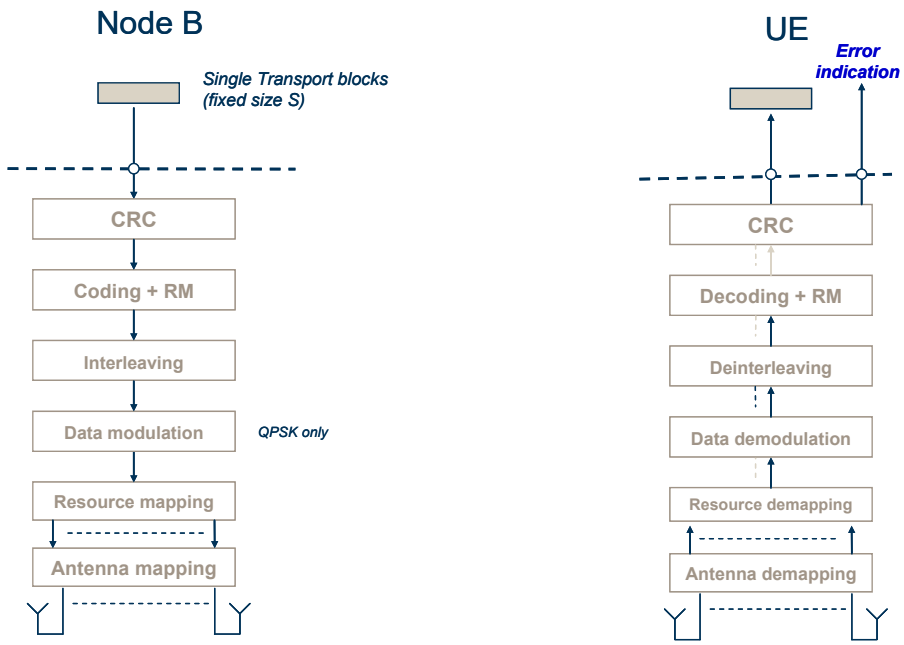

Figure 5.4.1.2: BCH physical-layer model

It is FFS whether the BCH needs to be extended, in which case the BCH would comprise a primary and a secondary BCH.

NOTE In case the BCH is extended, the characteristics of the primary BCH (P-BCH) would be as defined in the above. The P-BCH would carry scheduling information of the secondary BCH (S-BCH). The S-BCH would apply a fixed coding while its carrier bandwidth may be limited

5.4.1.3 Paging Channel

The PCH physical-layer model is described based on the corresponding PCH physical-layer-processing chain, see Figure 5.4.1.3. Processing steps that are relevant for the physical-layer model, e.g. in the sense that they are configurable by higher layers, are highlighted in blue on the figure.

ONEPLUS EXHIBIT 1015
Page 24 of 82

- **Higher-layer data passed to/from the physical layer**
  - A single transport block per TTI.
- **CRC and transport-block-error indication**
  - Transport-block-error indication delivered to higher layers.
- **FEC and rate matching**
  - Channel coding rate is implicitly given by the combination of transport block size, modulation scheme and resource assignment;
  - No PCH Hybrid ARQ, i.e. no higher-layer control of redundancy version.
- **Interleaving**
  - No control of interleaving by higher layers.
- **Data modulation**
  - Modulation scheme is decided by MAC Scheduler.
- **Mapping to resource blocks**
  - L2 controlled resource assignment;
  - Possible support of dynamic transport format and resource allocation.
- **Physical-layer processing Step 6: Multi-antenna processing**
  - MAC Scheduler partly configures mapping from assigned resource blocks to the available number of antenna ports.
- **Support for Hybrid-ARQ-related signalling**

  No Hybrid ARQ.

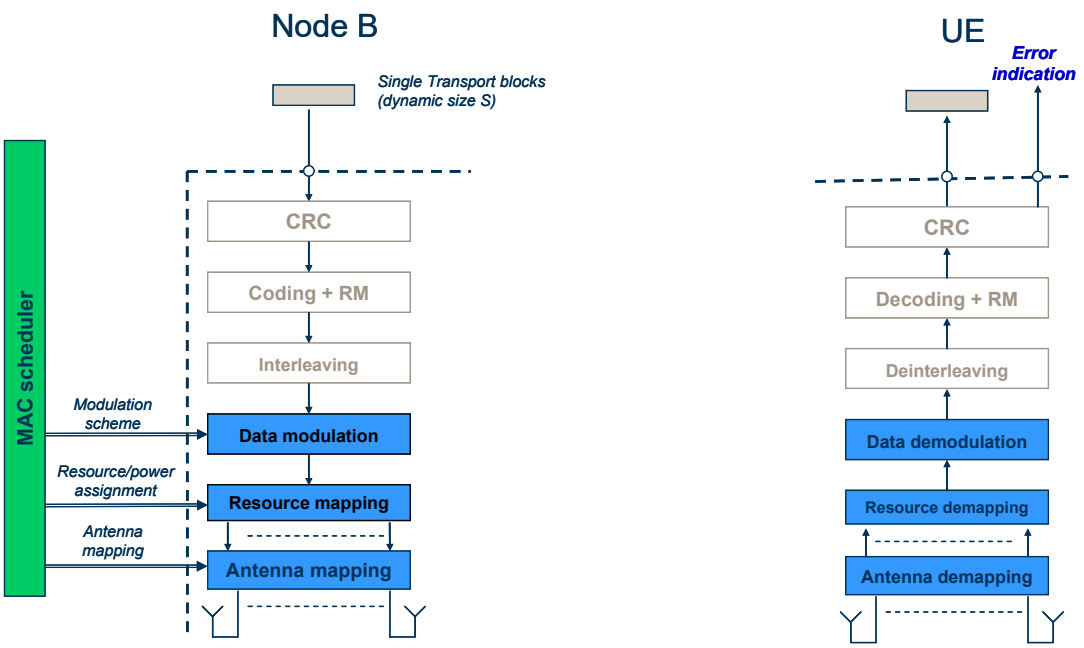

Figure 5.4.1.3: PCH physical-layer model

ONEPLUS EXHIBIT 1015
Page 25 of 82

5.4.1.4 Multicast Channel

The MCH is characterized by the support for multi-cell reception at the UE (a.k.a. "SFN" transmission). This implies that only semi-static configuration of the MCH transport format and resource assignment is possible. The MCH physical-layer model is described based on the corresponding PCH physical-layer-processing chain, see Figure 5.4.1.4. Processing steps that are relevant for the physical-layer model, e.g. in the sense that they are configurable by higher layers, are highlighted in blue.

- **Higher-layer data passed to/from the physical layer**
  - N (at least up to 2) transport blocks delivered to physical layer once every TTI.
- **CRC and transport-block-error indication**
  - Transport-block-error indication delivered to higher layers.
- **FEC and rate matching**
  - Channel coding rate is implicitly given by the combination of transport block size, modulation scheme and resource assignment;
  - No MCH Hybrid ARQ, i.e. no higher-layer control of redundancy version.
- **Interleaving**
  - No control of interleaving by higher layers.
- **Data modulation**
  - Modulation scheme is decided by MAC Scheduler.
- **Mapping to resource blocks**
  - L2 controlled semi–static resource assignment.
- **Physical-layer processing Step 6: Multi-antenna processing**
  - MAC Scheduler partly configures mapping from assigned resource blocks (for each stream) to the available number of antenna ports.
- **Support for Hybrid-ARQ-related signalling**
  - No Hybrid ARQ.

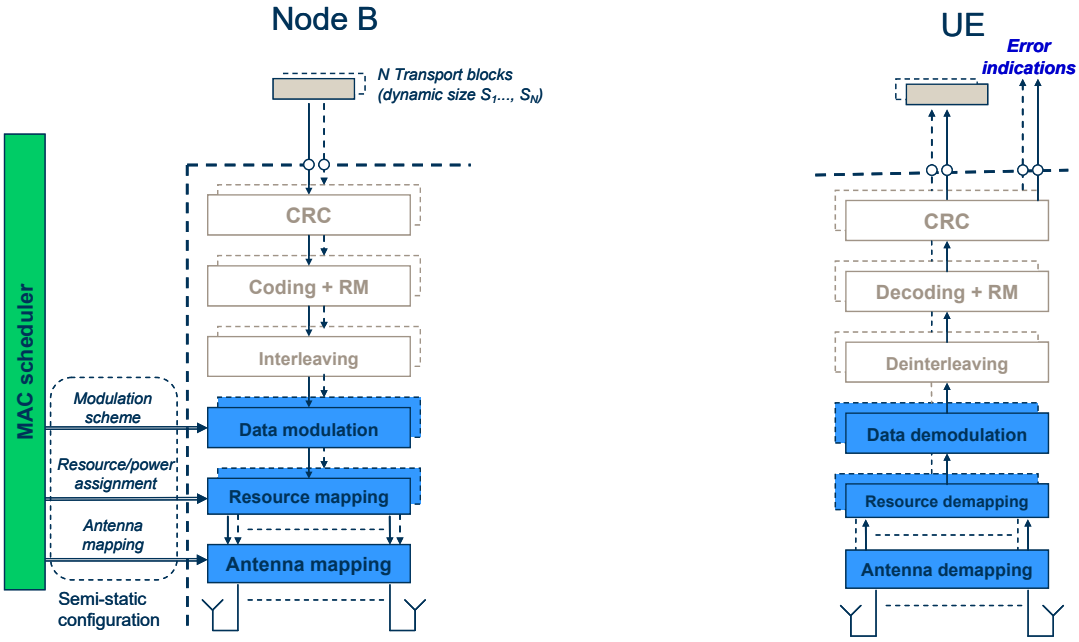

Figure 5.4.1.4: MCH physical-layer model

5.4.1.5 Uplink Shared Channel

The UL-SCH physical-layer model is described based on the corresponding PCH physical-layer-processing chain, see Figure 5.4.1.5. Processing steps that are relevant for the physical-layer model, e.g. in the sense that they are configurable by higher layers, are highlighted in blue. It should be noted that, in case UL-SCH, the scheduling decision is at least partly made at the network side. The uplink transmission control in the UE then configures the uplink physical-layer processing, based on uplink transport-format and resource-assignment information received on the downlink.

- **Higher-layer data passed to/from the physical layer**
  - N (N may be limited to one) transport blocks of dynamic size delivered to the physical layer once every TTI.
- **CRC and transport-block-error indication**
  - Transport-block-error indication delivered to higher layers.
- **FEC and rate matching**
  - Channel coding rate is implicitly given by the combination of transport block size, modulation scheme and resource assignment;
  - Physical layer model support of HARQ: in case of Incremental Redundancy, the corresponding Layer 2 Hybrid-ARQ process controls what redundancy version is to be used for the physical layer transmission for each TTI.
- **Interleaving**
  - No control of interleaving by higher layers.
- **Data modulation**
  - Modulation scheme is decided by MAC Scheduler (at least QPSK and 16QAM).
- **Mapping to resource blocks**
  - L2-controlled resource assignment.
- **Physical-layer processing Step 6: Multi-antenna processing**
  - MAC Scheduler partly configures mapping from assigned resource blocks (for each stream) to the available number of antenna ports.
- **Support for Hybrid-ARQ-related signalling**

  The model of Figure 5.4.1.5 also captures
  - Transport via physical layer of Hybrid-ARQ related information (exact info is FFS) associated with the UL-SCH, to the peer HARQ process at the receiver side;
  - Transport via physical layer of corresponding HARQ acknowledgements to UL-SCH transmitter side.

ONEPLUS EXHIBIT 1015
Page 27 of 82

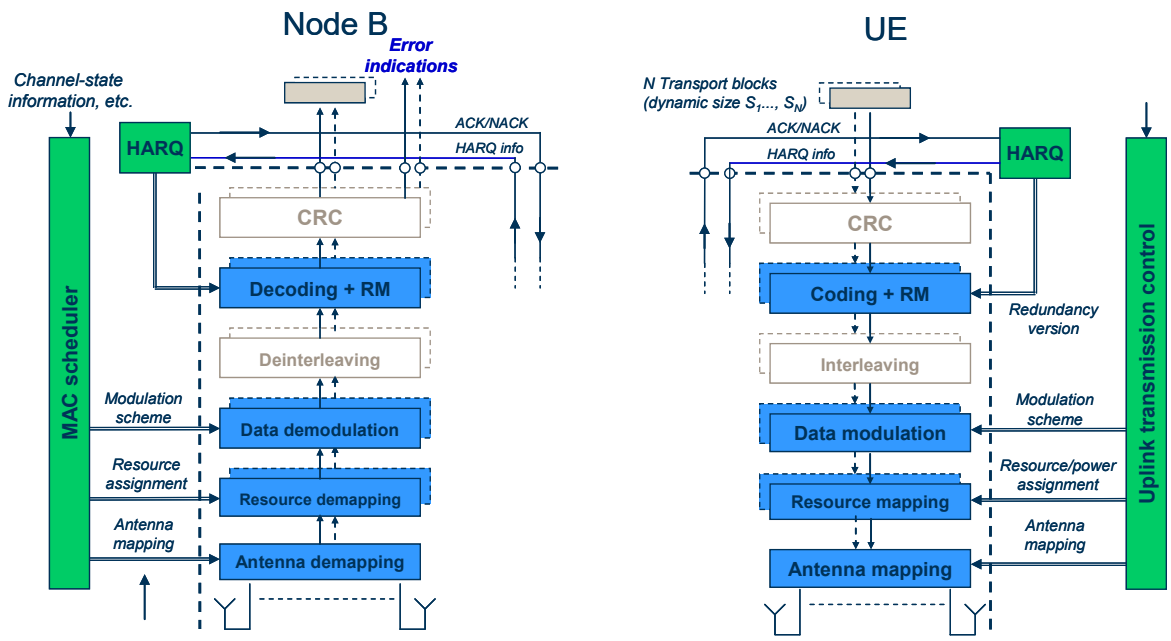

Figure 5.4.1.5: UL-SCH physical-layer model

5.4.1.6 Random-access Channel

5.4.2 Physical-layer indications

In addition to decoded transport blocks, the physical layer also provides higher layers with different indicators. The indicators delivered to higher layers may originate in the corresponding physical layer on in the physical layer of the peer entity (transported over the air by means of L1 signalling).

5.4.2.1 Error indicators

The error indicators (see Figures 5.4.1.1-5.4.1.5) are one type of indicators. An error indicator indicates whether or not the physical layer has correctly decoded a received transport block

5.4.2.2 Channel-quality indicators

Channel-quality indicators (CQI) indicate the downlink and uplink channel quality. The channel-quality indicators are delivered by the eNB physical layer to the eNB MAC layer. Exactly how the channel-quality indicators are generated within the physical layer is a physical-layer-internal issue and may e.g. depend on the duplex scheme (FDD or TDD).

6 Layer 2

Layer 2 is split into the following sublayers: Medium Access Control (MAC), Radio Link Control (RLC) and Packet Data Convergence Protocol (PDCP).

This subclause gives a high level description of the Layer 2 sub-layers in terms of services and functions. The two figures below depict the PDCP/RLC/MAC architecture for downlink and uplink, where:

- Service Access Points (SAP) for peer-to-peer communication are marked with circles at the interface between sublayers. The SAP between the physical layer and the MAC sublayer provides the transport channels. The SAPs between the MAC sublayer and the RLC sublayer provide the logical channels.

- The multiplexing of several logical channels (i.e. radio bearers) on the same transport channel (i.e. transport block) is performed by the MAC sublayer;

ONEPLUS EXHIBIT 1015
Page 28 of 82

- In both uplink and downlink, only one transport block is generated per TTI in the non-MIMO case.

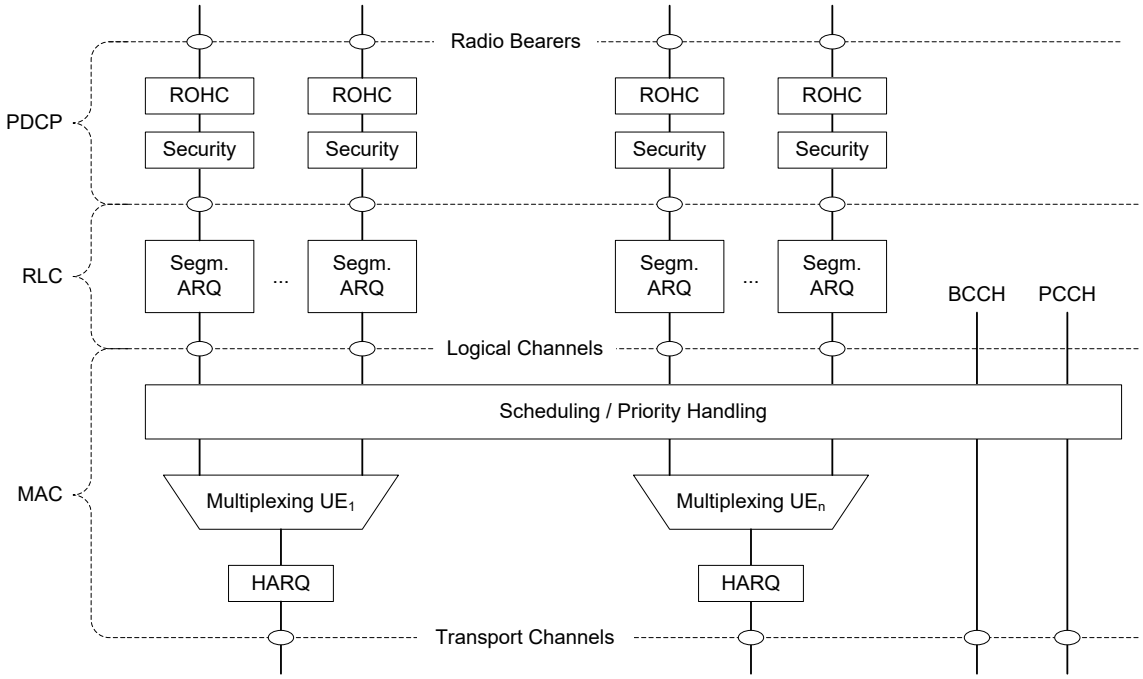

Figure 6-1: Layer 2 Structure for DL

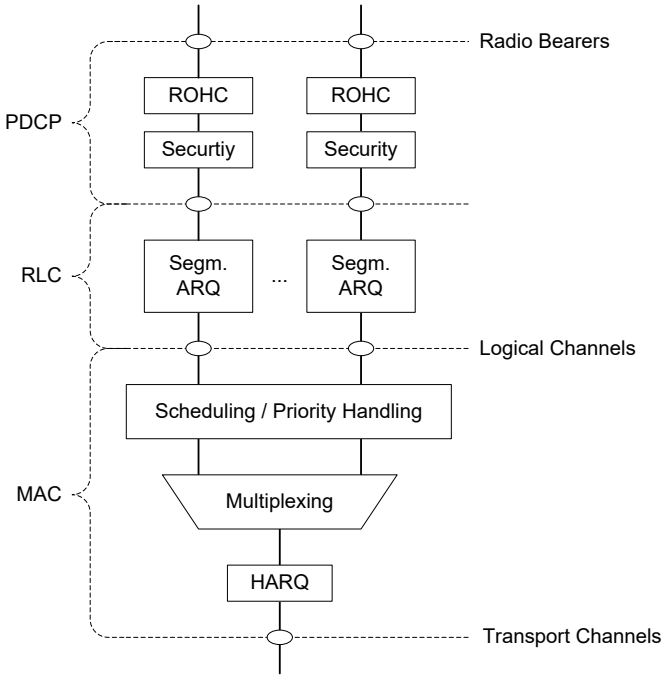

Figure 6-2: Layer 2 Structure for UL

Note: The location of security functions needs to be re-discussed as a result of moving the PDCP from SAE Gateway down to the eNB.

ONEPLUS EXHIBIT 1015
Page 29 of 82

6.1 MAC Sublayer

This subclause provides an overview on services and functions provided by the MAC sublayer.

6.1.1 Services and Functions

The main services and functions of the MAC sublayer include:

- Mapping between logical channels and transport channels;
- Multiplexing/demultiplexing of RLC PDUs belonging to one or different radio bearers into/from transport blocks (TB) delivered to/from the physical layer on transport channels;
- Traffic volume measurement reporting;
- Error correction through HARQ;
- Priority handling between logical channels of one UE;
- Priority handling between UEs by means of dynamic scheduling;
- Transport format selection;
- Mapping of Access Classes to Access Service Classes (FFS for RACH);
- Padding.

NOTE: How the multiplexing relates to the QoS of the multiplexed logical channels is FFS.

6.1.2 Logical Channels

Different kinds of data transfer services as offered by MAC. Each logical channel type is defined by what type of information is transferred.

A general classification of logical channels is into two groups:

- Control Channels (for the transfer of control plane information);
- Traffic Channels (for the transfer of user plane information).

There is one MAC entity per cell. MAC generally consists of several function blocks (transmission scheduling functions, per UE functions, MBMS functions, MAC control functions, transport block generation…). Transparent Mode is only applied to BCCH and PCCH.

6.1.2.1 Control Channels

Control channels are used for transfer of control plane information only. The control channels offered by MAC are:

- **Broadcast Control Channel (BCCH)**

  A downlink channel for broadcasting system control information.

- **Paging Control Channel (PCCH)**

  A downlink channel that transfers paging information. This channel is used when the network does not know the location cell of the UE.

- **Common Control Channel (CCCH)**

  Uplink channel for transmitting control information between UEs and network. This channel is used by the UEs having no RRC connection with the network. FFS if CCCH needed in downlink as well.

- **Multicast Control Channel (MCCH)**

ONEPLUS EXHIBIT 1015
Page 30 of 82

A point-to-multipoint downlink channel used for transmitting MBMS control information from the network to the UE, for one or several MTCHs. This channel is only used by UEs that receive MBMS.

NOTE: It is FFS how MBMS scheduling is transmitted by either L2/3 signalling on MCCH or L1 signalling.

- **Dedicated Control Channel (DCCH)**

  A point-to-point bi-directional channel that transmits dedicated control information between a UE and the network. Used by UEs having an RRC connection.

6.1.2.2 Traffic Channels

Traffic channels are used for the transfer of user plane information only. The traffic channels offered by MAC are:

- **Dedicated Traffic Channel (DTCH)**

  A Dedicated Traffic Channel (DTCH) is a point-to-point channel, dedicated to one UE, for the transfer of user information. A DTCH can exist in both uplink and downlink.

- **Multicast Traffic Channel (MTCH)**

  A point-to-multipoint downlink channel for transmitting traffic data from the network to the UE. This channel is only used by UEs that receive MBMS.

6.1.3 Mapping between logical channels and transport channels

6.1.3.1 Mapping in Uplink

The figure below depicts the mapping between uplink logical channels and uplink transport channels:

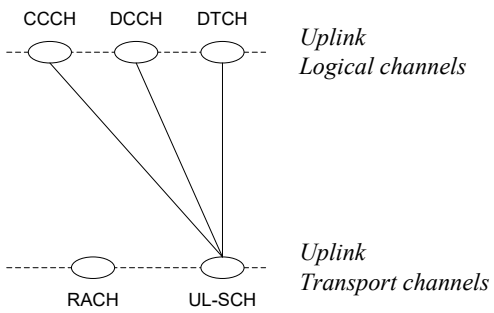

Figure 6.1.3.1: Mapping between uplink logical channels and uplink transport channels

In Uplink, the following connections between logical channels and transport channels exist:

- CCCH can be mapped to UL-SCH;
- DCCH can be mapped to UL- SCH;
- DTCH can be mapped to UL-SCH.

6.1.3.2 Mapping in Downlink

The figure below depicts the mapping between downlink logical channels and downlink transport channels (in grey the items for FFS):

ONEPLUS EXHIBIT 1015
Page 31 of 82

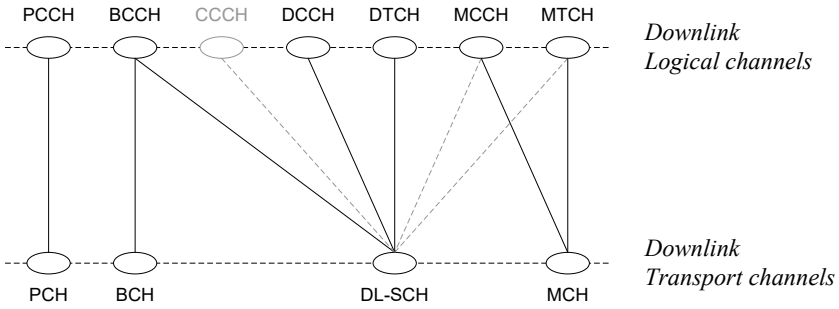

Figure 6.1.3.2: Mapping between downlink logical channels and downlink transport channels

In Downlink, the following connections between logical channels and transport channels exist:

- BCCH can be mapped to BCH;
- BCCH can be mapped to DL-SCH;
- PCCH can be mapped to PCH;
- CCCH can be mapped to DL-SCH: FFS if CCCH exists;
- DCCH can be mapped to DL-SCH;
- DTCH can be mapped to DL-SCH;
- MTCH can be mapped to DL-SCH: FFS;
- MTCH can be mapped to MCH;
- MCCH can be mapped to DL-SCH: FFS;
- MCCH can be mapped to MCH.

6.2 RLC Sublayer

This subclause provides an overview on services, functions and PDU structure provided by the RLC sublayer. Note that:

- The reliability of RLC is configurable: some radio bearers may tolerate rare losses (e.g. TCP traffic);
- Radio Bearers are not characterized by a fixed sized data unit (e.g. a fixed sized RLC PDU).

6.2.1 Services and Functions

The main services and functions of the RLC sublayer include:

- Transfer of upper layer PDUs supporting AM or UM;
- TM data transfer;
- Error Correction through ARQ (CRC check provided by the physical layer, in other words no CRC needed at RLC level);
- Segmentation according to the size of the TB: only if an RLC SDU does not fit entirely into the TB then the RLC SDU is segmented into variable sized RLC PDUs, which do not include any padding;
- Re-segmentation of PDUs that need to be retransmitted: if a retransmitted PDU does not fit entirely into the new TB used for retransmission then the RLC PDU is re-segmented;
- The number of re-segmentation is not limited;

ONEPLUS EXHIBIT 1015
Page 32 of 82

- Concatenation of SDUs for the same radio bearer;
- In-sequence delivery of upper layer PDUs except at HO in the uplink;
- Duplicate Detection;
- Protocol error detection and recovery;
- Flow Control between eNB and UE (FFS);
- SDU discard;
- Reset.

6.2.2 PDU Structure

Figure 6.2.2 below depicts the RLC PDU structure where:

- The PDU sequence number carried by the RLC header is independent of the SDU sequence number (i.e. PDCP sequence number);
- A red dotted line indicates the occurrence of segmentation;
- Because segmentation only occurs when needed and concatenation is done in sequence, the content of an RLC PDU can generally be described by the following relations:
  - {0; 1} last segment of SDU_i + [0; n] complete SDUs + {0; 1} first segment of SDU_{i+n+1} ; or
  - 1 segment of SDU_i .

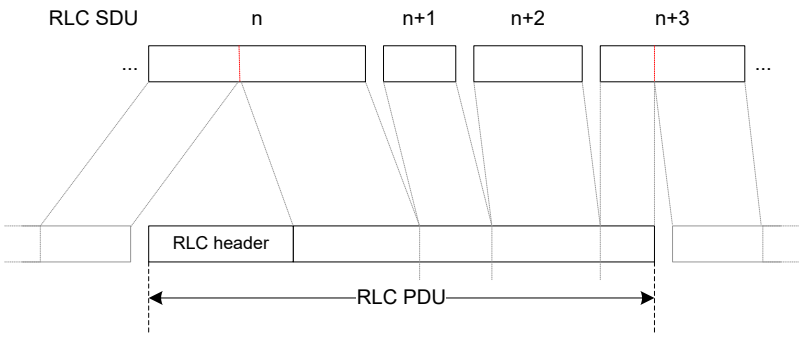

Figure 6.2.2: RLC PDU Structure

6.3 PDCP Sublayer

This subclause provides an overview on services, functions and PDU structure provided by the PDCP sublayer.

6.3.1 Services and Functions

The main services and functions of the PDCP sublayer include:

- Header compression and decompression: ROHC only;
- Transfer of user data: transmission of user data means that PDCP receives PDCP SDU from the NAS and forwards it to the RLC layer and vice versa;
- Reordering of the downlink RLC SDUs at least during inter-eNB mobility;
- In-sequence delivery of upper layer PDUs at HO in the uplink (FFS);

ONEPLUS EXHIBIT 1015
Page 33 of 82

- Duplicate detection of lower layer SDUs;
- Ciphering of user plane data and control plane data (NAS Signalling);

Note: The location of security, reordering and in-sequence delivery functions need to be re-discussed as a result of moving the PDCP from SAE Gateway down to the eNB.

NOTE: When compared to UTRAN, the *lossless DL RLC PDU size change* is not required.

6.3.2 PDU Structure

Figure 6.3.2 below depicts the PDCP PDU structure where:

- PDCP PDU and PDCP header are octet-aligned;
- PDCP header can be either 1 or 2 bytes long.

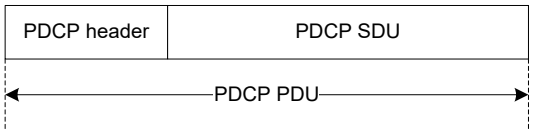

Figure 6.3.2: PDCP PDU Structure

6.4 Data flows through Layer 2

7 RRC

This subclause provides an overview on services and functions provided by the RRC sublayer.

7.1 Services and Functions

The main services and functions of the RRC sublayer include:

- Broadcast of System Information related to the non-access stratum (NAS);
- Broadcast of System Information related to the access stratum (AS);
- Paging;
- Establishment, maintenance and release of an RRC connection between the UE and E-UTRAN including:
  - Allocation of temporary identifiers between UE and E-UTRAN;
  - Configuration of signalling radio bearer(s) for RRC connection:
    - Low priority SRB and high priority SRB.
- Security functions including:
    - Integrity protection for RRC messages;
    - Ciphering for RRC messages.

Note: The location of security functions needs to be re-discussed as a result of moving the PDCP from SAE Gateway down to the eNB.

- Establishment, configuration, maintenance and release of point to point Radio Bearers;

ONEPLUS EXHIBIT 1015
Page 34 of 82

- Mobility functions including:
  - UE measurement reporting and control of the reporting for inter-cell and inter-RAT mobility;
  - Inter-cell handover;
  - UE cell selection and reselection and control of cell selection and reselection;
  - Context transfer between eNBs.
- Notification for MBMS services (FFS);
- Establishment, configuration, maintenance and release of Radio Bearers for MBMS services (FFS);
- QoS management functions;
- UE measurement reporting and control of the reporting;
- MBMS control (FFS);
- NAS direct message transfer to/from NAS from/to UE.

7.2 RRC protocol states & state transitions

RRC uses the following states:

- **RRC_IDLE**:
  - UE specific DRX configured by NAS;
  - Broadcast of system information;
  - Paging;
  - Cell re-selection mobility;
  - The UE shall have been allocated an id which uniquely identifies the UE in a tracking area;
  - No RRC context stored in the eNB.
- **RRC_CONNECTED**:
  - UE has an E-UTRAN-RRC connection;
  - UE has context in E-UTRAN;
  - E-UTRAN knows the cell which the UE belongs to;
  - Network can transmit and/or receive data to/from UE;
  - Network controlled mobility (handover);
  - Neighbour cell measurements;
  - At PDCP/RLC/MAC level:
    - UE can transmit and/or receive data to/from network;
    - UE monitors control signalling channel for shared data channel to see if any transmission over the shared data channel has been allocated to the UE;
    - UE also reports channel quality information and feedback information to eNB;
    - DRX/DTX period can be configured according to UE activity level for UE power saving and efficient resource utilization. This is under control of the eNB.

ONEPLUS EXHIBIT 1015
Page 35 of 82

7.3 Transport of NAS messages

In E-UTRAN, NAS messages are either concatenated with RRC messages or carried in RRC without concatenation:

- Concatenated messages:
    - Initial Direct Transfer is concatenated with RRC connection request if the transport block size allows it (FFS);
    - Other NAS messages maybe concatenated with RRC messages i.e. for synchronised NAS/RRC procedure;
    - Integrity protection of the NAS messages from RRC is FFS as integrity protection is already applied in the MME.
- Non-concatenated messages:
    - No integrity protection from RRC;

7.4 System Information

Scheduling information (indicating starting times) is provided for a group of system information blocks (SIBs) that have the same scheduling requirements (i.e. periodicity). Such a group of SIBs is referred to as a Scheduling Unit (SU). An SU may cover multiple subframes. It is expected that typically 3 or 4 SUs will be used. The mapping of SIBs on to SUs may be configurable (FFS).

NOTE The possibility to schedule segments of an SU into non-contiguous subframes (e.g. for very large SIBs without strong delay requirements) is FFS.

The following system information is carried on the BCH:

- Physical layer parameters (e.g. bandwidth);
- System Frame Number (SFN, unless provided otherwise);
- Scheduling information of the most frequently repeated Scheduling Unit (SU-1);
- Value tag(s) (FFS).

The following system information is carried within the most frequently repeated Scheduling Unit (SU-1):

- One or more PLMN identities;
- Tracking Area Code;
- Cell identity;
- Cell barring status;
- Scheduling information of the other Scheduling Units (other than SU-1);
- SIB mapping information i.e. indication in which SU the SIBs is included (FFS).

SU-1 should include all access restriction related parameters. SU-1 is carried on the DL-SCH, unless the BCH is extended. In the latter case, S-BCH may carry (part of) the SU-1 information.

System information may also be provided to the UE by means of dedicated signalling e.g. upon handover.

ONEPLUS EXHIBIT 1015
Page 36 of 82

7.5 RRC Procedures

8 E-UTRAN identities

8.1 E-UTRAN related UE identities

The following E-UTRAN related UE identities are used:

a) C-RNTI:

- The C-RNTI provides a unique UE identification at the cell level identifying RRC Connection;
- It is assumed that this identity is used for scheduling unless the cost would turn out to be too high and the introduction of a separate MAC identity would be required.

b) Random value for contention resolution:

- During some transient states, the UE is temporarily identified with a random value for contention resolution purposes.

8.2 Network entity related Identities

The following identities are used in E-UTRAN for identifying a specific network entity:

a) MME identity:

- It is agreed that a UE in LTE_IDLE establishing an RRC connection has to provide a unique identification of its current MME to the eNB when the connection establishment is initially related to NAS signalling, in order for the eNB to fetch the UE context from the MME;
- It is FFS whether this MME identity is also provided when the RRC connection is initially intended for user plane traffic;
- It is FFS whether this MME identity is provided by the UE to the eNB as a separate identity, or whether this MME identity is included in the TMSI for MME.

b) eNB identity or cell identity (FFS):

- The signalling sequence to be followed in case a UE in LTE_ACTIVE accesses a cell in which no UE context has been established yet (kind of “cell update”) is currently not agreed. Identified options are:
  1) In order to obtain the UE context/data from the old eNB, the new eNB directly contacts the old eNB without consulting the MME;
  2) In order to obtain the UE context/data from the old eNB, the new eNB consults the MME to obtain the identity of the old eNB;
  3) In order to obtain a UE context, the new eNB contacts the MME.
- If it is required for the new eNB to be able to contact the old eNB without involving the MME (case 1 above), the UE has to provide a network entity related identification that enables the new eNB to contact the old eNB, and that enables the old eNB to uniquely identify the UE for retrieving the correct UE context. For this purpose either an eNB identity or cell identity could be used.

c) Tracking Area identity (FFS):

- Unique identification of a Tracking Area in a PLMN.

The following identities are broadcast in every E-UTRAN cell:

a) Cell identity:

ONEPLUS EXHIBIT 1015
Page 37 of 82

- Uniquely identifying the cell in the area (size of area is FFS).

b) One or more Tracking Area identities (FFS):

- Tracking Area (s) this cell belongs to.

c) One or more PLMNs:

- PLMN (s) for which this cell is providing radio access.

9 ARQ and HARQ

E-UTRAN provides ARQ and HARQ functionalities. The ARQ functionality provides error correction by retransmissions in acknowledged mode at Layer 2. The HARQ functionality ensures delivery between peer entities at Layer 1.

9.1 HARQ principles

The HARQ within the MAC sublayer has the following characteristics:

- N-process Stop-And-Wait HARQ is used;
- The HARQ is based on ACK/NACKs;
- In the downlink:
  - Asynchronous retransmissions with adaptive transmission parameters are supported;
  - Additional optimisations (e.g. less adaptive/synchronous) are FFS.
- In the uplink:
  - HARQ is based on synchronous retransmissions;
  - Whether resource allocation and modulation and coding scheme can be adapted for retransmissions is FFS.
- The HARQ transmits and retransmits TBs;

9.2 ARQ principles

The ARQ within the RLC sublayer has the following characteristics:

- ARQ retransmits RLC PDUs or RLC PDU segments;
- ARQ retransmissions are based on:
  - RLC status reports;
  - HARQ/ARQ interactions (see subclause 9.3).
- Polling for RLC status report is used when needed by RLC;
- Status reports can be triggered by upper layers;
- Means to discard a SDU not yet transmitted or under transmission should be supported;
- Means to reset and/or re-establish RLC should be supported.

9.3 HARQ/ARQ interactions

In HARQ assisted ARQ operation, ARQ uses knowledge obtained from the HARQ about the transmission/reception status of a TB e.g.:

ONEPLUS EXHIBIT 1015
Page 38 of 82

- If the HARQ transmitter detects a failed delivery of a TB due to e.g. maximum retransmission limit is reached the relevant transmitting ARQ entities are notified and potential retransmissions and re-segmentation can be initiated;
- If the HARQ receiver is able to detect a NACK to ACK error it is FFS if the relevant transmitting ARQ entities are notified via explicit signalling;
- If the HARQ receiver is able to detect TB transmission failure it is FFS if the receiving ARQ entities are notified.

10 Mobility

E-UTRAN mobility in LTE_IDLE and LTE_ACTIVE should provide means for load balancing.

10.1 Intra E-UTRAN

In E-UTRAN RRC_CONNECTED state, network-controlled UE-assisted handovers are performed and various DRX/DTX cycles are supported:

- UE performs neighbour cell measurements based on measurement control and neighbour cell information from the network:
    - List of carrier frequencies of inter-frequency neighbours is signalled to the UE (other information FFS);
- Network signals reporting criteria for event-triggered and periodical reporting.

Following defines the handover support within E-UTRAN:

- The intra E-UTRAN HO in RRC_CONNECTED state is UE assisted NW controlled HO with HO preparation signalling in E-UTRAN:
    - Part of the HO command comes from the target eNB and is transparently forwarded to the UE by the source eNB;
    - The QoS profiles in use by the UE (SAE bearer attributes) are sent to the target eNB by the source eNB, and it is FFS if also the currently used AS configuration is sent (intra-MME case);
    - Both the source ENB and UE keep some context (e.g. C-RNTI) to enable the return of the UE in case of HO failure;
    - UE accesses the target cell via contention-based RACH (the use of dedicated resources for accessing the target cell in a contention-free manner is FFS).
- In E-UTRAN RRC_IDLE state, cell reselections are performed and DRX is supported.

10.1.1 Mobility Management in LTE_IDLE

10.1.1.1 Cell selection

The principles of PLMN selection in E-UTRA are based on the 3GPP PLMN selection principles. Cell selection is required on transition from LTE_DETACHED to LTE_IDLE or LTE_ACTIVE.

Cell selection:

- The UE NAS identifies a selected PLMN and equivalent PLMNs;
- The UE searches the E-UTRA frequency bands and for each carrier frequency identifies the strongest cell. It reads cell system information broadcast to identify its PLMN(s):
    - Details for the cell search are FFS;

ONEPLUS EXHIBIT 1015
Page 39 of 82

  - The UE may search each carrier in turn ("initial cell selection") or make use of stored information to shorten the search ("stored information cell selection").

- The UE seeks to identify a suitable cell; if it is not able to identify a suitable cell it seeks to identify an acceptable cell. When a suitable cell is found or if only an acceptable cell is found it camps on that cell and commence the cell reselection procedure:

  - A suitable cell is one for which the measured cell attributes satisfy the cell selection criteria; the cell PLMN is the selected PLMN, registered or an equivalent PLMN; the cell is not barred or reserved and the cell is not part of a tracking area which is in the list of "forbidden tracking areas for roaming";

Note: the above text will be revised if it is agreed that a cell can be a member of more than one tracking area.

  - An acceptable cell is one for which the measured cell attributes satisfy the cell selection criteria and the cell is not barred;

  - The measurements made and the cell selection criteria to be applied are FFS.

Transition to RRC_IDLE:

On transition from RRC_CONNECTED to RRC_IDLE, a UE should camp on the last cell for which it was in RRC_CONNECTED or a cell/any cell of set of cells or frequency be assigned by RRC in the state transition message.

Recovery from out of coverage:

The UE should attempt to find a suitable cell in the manner described for stored information or initial cell selection above. If no suitable cell is found on any frequency or RAT the UE should attempt to find an acceptable cell.

10.1.1.2 Cell reselection

UE in RRC_IDLE performs cell reselection. The principles of the procedure are the following:

- Cell reselection takes place in a hierarchical or non hierarchical cell topology. The type of topology will be indicated in system information;

- The UE makes measurements of attributes of the serving and neighbour cells to enable the reselection process:

  - Cells listed in the serving cell system information broadcast are searched and measured by the UE; it is FFS whether the UE can search and measure cells that are not listed in system information;

  - The attributes to be measured for E-UTRAN cells are FFS;

- Measurements may be omitted if the serving cell attribute fulfils particular search or measurement criteria. The criteria and rules relating to which measurements may be omitted are FFS;

- Cell reselection identifies the cell that the UE should camp on. It is based on cell reselection criteria which involves measurements of the serving and neighbour cells. Details for cell reselection criteria are FFS (e.g. whether a cell specific offset is applied to measurements);

- Cell reselection parameters are applicable for all UEs in a cell, but it is possible to configure specific reselection parameters per UE group or per UE.

Cell access restrictions apply as for UTRAN, which consist of access class (AC) barring and cell reservation (e.g. for cells "reserved for operator use") applicable for mobiles in RRC_IDLE mode.

ONEPLUS EXHIBIT 1015
Page 40 of 82

10.1.1.3 Handling in eNB

10.1.1.4 Handling above eNB

10.1.1.5 Mobility Management Entity (MME)

10.1.2 Mobility Management in LTE_ACTIVE

The Intra-E-UTRAN-Access Mobility Support for UEs in LTE_ACTIVE handles all necessary steps already known from state of the art relocation/handover procedures, like processes that precedes the final HO decision on the source network side (control and evaluation of UE and eNB measurements taking into account certain UE specific area restrictions), preparation of resources on the target network side, commanding the UE to the new radio resources and finally releasing resources on the (old) source network side. It contains mechanisms to transfer context data between evolved nodes, and to update node relations on C-plane and U-plane.

10.1.2.1 Handover

The intra E-UTRAN HO in RRC_CONNECTED state is UE assisted NW controlled HO, with HO preparation signalling in E-UTRAN.

10.1.2.1.1 C-plane handling

The HO procedure is performed without EPC involvement, i.e. preparation messages are directly exchanged between the eNBs. The release of the resources at the source side during the HO completion phase is triggered by the eNB. The figure below depicts the basic handover scenario where neither MME nor SAE Gateway changes:

ONEPLUS EXHIBIT 1015
Page 41 of 82

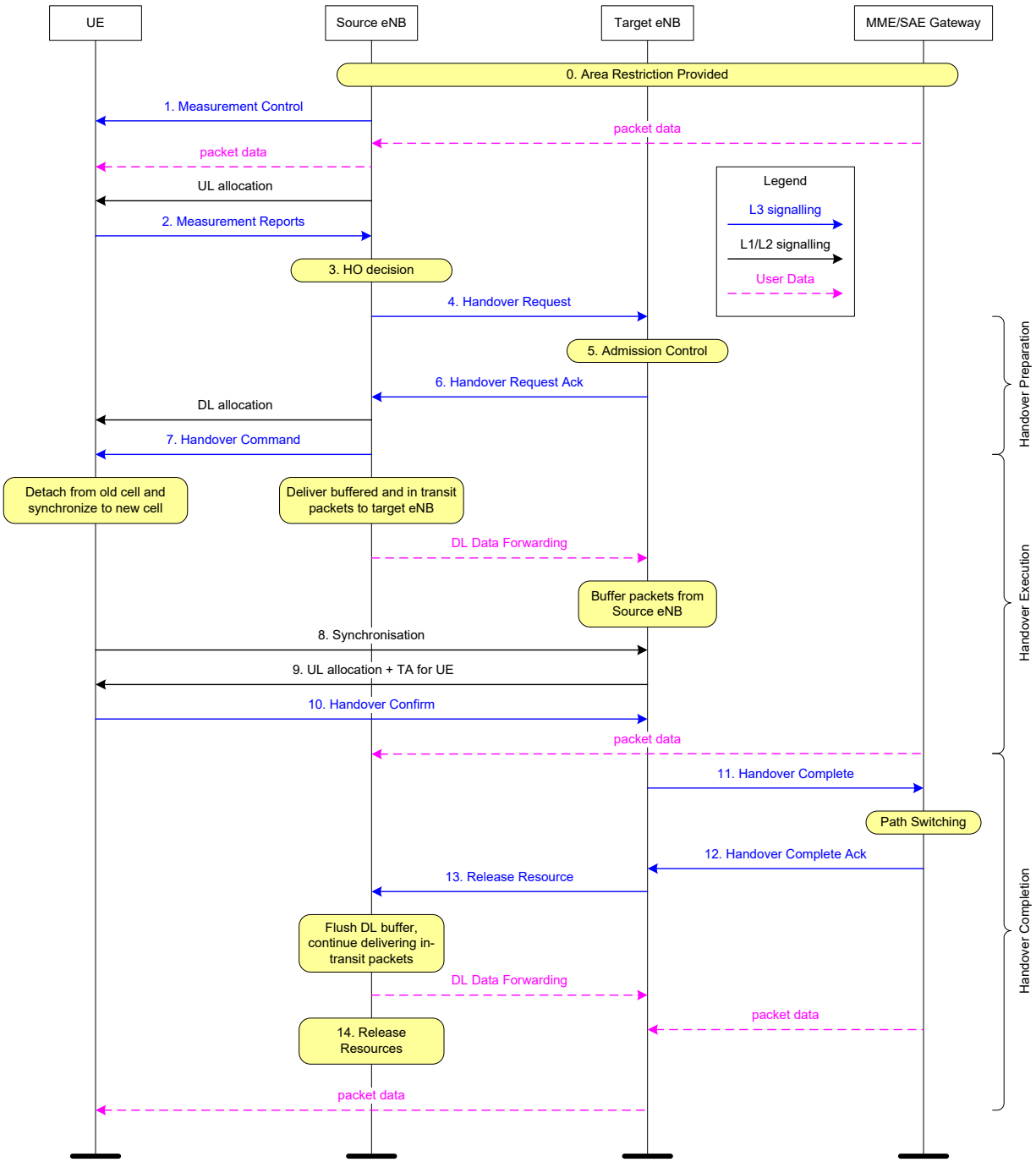

Figure 10.1.2.1: Intra-MME/SAE Gateway HO

Below is a more detailed description of the intra-MME/SAE Gateway HO procedure:

0 The UE context within the source eNB contains information regarding roaming restrictions which where provided either at connection establishment or at the last TA update.

1 The source eNB configures the UE measurement procedures according to the area restriction information. Measurements provided by the source eNB may assist the function controlling the UE's connection mobility.

2 UE is triggered to send MEASUREMENT REPORT by the rules set by i.e. system information, specification etc.

3 Source eNB makes decision based on MEASUREMENT REPORT and RRM information to hand off UE.

ONEPLUS EXHIBIT 1015
Page 42 of 82

4 The source eNB issues a HANDOVER REQUEST message to the target eNB passing necessary information to prepare the HO at the target side (UE X2 signalling context reference at source eNB, UE S1 EPC signalling context reference, target cell ID, RRC context, SAE bearer context). UE X2 / UE S1 signalling references enable the target eNB to address the source eNB and the EPC. The SAE bearer context includes necessary RNL and TNL addressing information. QoS profiles of the SAE bearers and possibly the AS configurations of these bearers are FFS.

5 Admission Control may be performed by the target eNB dependent on the received SAE bearer QoS information to increase the likelihood of a successful HO, if the resources can be granted by target eNB. The target eNB configures the required resources according to the received SAE bearer QoS information and reserves a C-RNTI.

6 Target eNB prepares HO with L1/L2 and sends the HANDOVER REQUEST ACKNOWLEDGE to the source eNB. The HANDOVER REQUEST ACKNOWLEDGE message includes a transparent container to be sent to the UE as part of the Handover Command. The container may include new C-RNTI, possibly some other parameters i.e. access parameters, SIBs, etc. The HANDOVER REQUEST ACKNOWLEDGE message may also include RNL/TNL information for the forwarding tunnels, if necessary.

Steps 7 to 13 provide means to avoid data loss during HO and are further detailed in 10.1.2.1.2 and 10.1.2.3.

7 The source eNB generates the HANDOVER COMMAND (RRC message) towards the UE. The HANDOVER COMMAND includes the transparent container, which has been received from the target eNB. The source eNodeB performs the necessary integrity protection and ciphering of the message. The UE receives the HANDOVER COMMAND with necessary parameters (i.e. new C-RNTI, possible starting time, target eNB SIBs etc) and is commanded by the source eNB to perform the HO. It is probable that UE needs to acknowledge reception of the HANDOVER COMMAND with RLC acknowledgment procedure.

8 After expiry of starting time in HANDOVER COMMAND, UE performs synchronisation to target eNB and then starts acquiring UL timing advance.

9 Network responds with UL allocation and timing advance.

10 When the UE has successfully accessed the target cell, the UE sends the HANDOVER CONFIRM message (C-RNTI) to the target eNB to indicate that the handover procedure is completed for the UE. The target eNB verifies the C-RNTI sent in the HANDOVER CONFIRM message.

11 The EPC is informed that the UE has changed cell. The UPE switches the downlink data path to the target side and can release any U-plane/TNL resources towards the source eNB.

12 The EPC confirms the HANDOVER COMPLETE message with the HANDOVER COMPLETE ACK message.

13 By sending RELEASE RESOURCE the target eNB informs success of HO to source eNB and triggers the release of resources. The timing for the target eNB to send this message between steps 10 and 12 is FFS.

14 Upon reception of the RELEASE RESOURCE message, the source eNB can release radio and C-plane related resources associated to the UE context.

NOTE: Details on updating of roaming/area restriction information within E-UTRAN in the course of the HO procedure are FFS

10.1.2.1.2 U-plane handling

The U-plane handling during the Intra-E-UTRAN-Access mobility activity for UEs in LTE_ACTIVE takes the following principles into account to avoid data loss during HO and hence to support seamless/lossless service provision:

- During HO preparation a U-plane tunnel is established between the source eNB and the target eNB.
- During HO execution, user data may be forwarded from the source eNB to the target eNB. The forwarding may take place in a service dependent and implementation specific way.
  - Forwarding of user data from the source to the target eNB should take place as long as packets are received at the source eNB from the EPC or the source eNB buffer has not been emptied (an implementation dependent mechanism decides that data forwarding can be stopped).
- During HO completion:

ONEPLUS EXHIBIT 1015
Page 43 of 82

- The EPC is informed by the target eNB that the UE has gained access at the target eNB by the HANDOVER COMPLETE message and the U-plane path is switched by the EPC from the source eNB to the target eNB.
- The source eNB should continue forwarding of U-plane data as long as packets are received at the source eNB from the EPC or the source eNB buffer has not been emptied (an implementation dependent mechanism decides that data forwarding can be stopped).

Note: Details on user plane handling are still FFS. The text above reflects the latest status of the Study Item as given in TR 25.912.

10.1.2.2 Path Switch

10.1.2.3 Data forwarding

Upon handover, the source eNB forwards all downlink RLC SDUs that have not been acknowledged by the UE to the target eNB. The decision of which SDUs to forward can be based for example on RLC status reports or HARQ feedback information depending on eNB implementation. The source eNB discards any remaining downlink RLC PDUs. The target eNB re-transmits and prioritize all downlink RLC SDUs forwarded by the source eNB as soon as it obtains them. Correspondingly, the source eNB does not forward the downlink RLC context to the target eNB.

Re-ordering of downlink RLC SDUs during handover is provided by the re-ordering function at the UE PDCP layer and can be activated at least during inter-eNB mobility.

Upon handover, the source eNB forwards all successfully received uplink RLC SDUs to the UPE and discards any remaining uplink RLC PDUs. The UE re-transmits the uplink RLC SDUs that have not been successfully received by the source eNB. Correspondingly, the source eNB neither forwards uplink RLC SDUs nor the uplink RLC context to the target eNB. If needed, the PDCP may support re-ordering of uplink RLC SDUs during handover (operator control).

Note: This needs to be re-discussed as a result of moving the PDCP from UPE down to the eNB.

10.1.2.4 Handling in eNB

10.1.2.5 Handling above eNB

10.1.2.6 Mobility Management Entity (MME)

10.1.2.7 Timing Advance

In RRC_CONNECTED, it remains FFS whether the timing advance is permanently maintained or not. If not, MAC knows if the L1 is synchronised and which procedure to use to start transmitting in the uplink (FFS for RRC).

Cases where the UL synchronisation status may move from “synchronised” to “non-synchronised” include:

- Expiration of a timer;
- Non-synchronised handover;
- Explicit request by MAC or RRC in the eNB;

10.1.3 Measurements

Measurements to be performed by a UE for intra/inter-frequency mobility can be controlled by E-UTRAN, using broadcast or dedicated control. In RRC_IDLE state, a UE shall follow the measurement parameters defined for cell reselection specified by the E-UTRAN broadcast (as in UTRAN SIB). The use of dedicated measurement control for RRC_IDLE state is FFS. In RRC_CONNECTED state, a UE shall follow the measurement configurations specified by RRC directed from the E-UTRAN (e.g. as in UTRAN MEASUREMENT_CONTROL).

Depending on whether the UE needs transmission/reception gaps to perform the relevant measurements, measurements are classified as gap assisted or non gap assisted. A non gap assisted measurement is a measurement on a cell that does not require transmission/reception gaps to allow the measurement to be performed. A gap assisted measurement is a measurement on a cell that does require transmission/reception gaps to allow the measurement to be performed.

ONEPLUS EXHIBIT 1015
Page 44 of 82

Whether a measurement is non gap assisted or gap assisted depends on the UE's capability and current operating frequency. The UE determines whether a particular cell measurement needs to be performed in a transmission/reception gap and the scheduler needs to know whether gaps are needed. The exact scenarios that require gap assisted measurements are FFS (see subclause 9.1.1).

Measurement gaps are provided and controlled by the network.

10.1.3.1 Neighbour cell measurements within the serving frequency layer

In a system with frequency reuse = 1, mobility within the same frequency layer (i.e. between cells with the same carrier frequency) is predominant. Good neighbour cell measurements are needed for cells that have the same carrier frequency as the serving cell in order to ensure good mobility support and easy network deployment. Search for neighbour cells with the same carrier frequency as the serving cell, and measurements of the relevant quantities for identified cells are needed.

NOTE: To avoid UE activity outside the DRX/DTX cycle, the reporting criteria for neighbour cell measurements should match the used DRX/DTX cycle.

10.1.3.2 Neighbour cell measurements of other frequency layers

Regarding mobility between different frequency layers (i.e. between cells with a different carrier frequency), UE may need to perform neighbour cell measurements during DL/UL idle periods that are provided by DRX/DTX or packet scheduling (i.e. gap assisted measurements).

NOTE: How the gaps are controlled, as well as how the scheduler knows the gaps required by the UE, is FFS.

10.1.4 Paging and C-plane establishment

Paging groups (where multiple UEs can be addressed) are used on L1/L2 signalling channel:

- Precise UE identity is found on PCH;
- DRX is UE specific.

10.1.5 Random Access Procedure

The random access procedure is characterized by:

- Common procedure for FDD and TDD;
- One procedure irrespective of cell size;
- Early contention resolution shall be used i.e. eNB does not wait for NAS reply before resolving contention.

The random access procedure is outlined on Figure 10.1.5-1 below:

ONEPLUS EXHIBIT 1015
Page 45 of 82

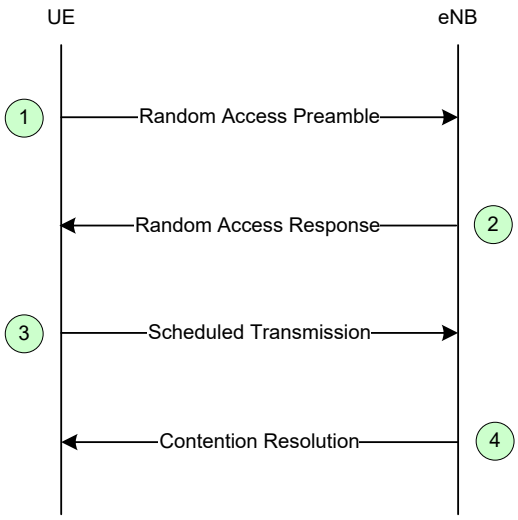

Figure 10.1.5-1: Random Access Procedure

The four steps of the random access procedures are:

1) Random Access Preamble on RACH in uplink:
   - 6 bits to carry: a random ID, and possibly (FFS) 1 bit of other information:
     - Cause or size, potentially with priority;
     - Pathloss or CQI to allocate UL resource appropriately.

NOTE: the total number of bits is 5 for alternative TDD.

2) Random Access Response on DL-SCH:
   - Semi-synchronous (within a flexible window of which the size is one or more TTI) with message 1;
   - No HARQ;
   - Addressed to RA-RNTI on L1/L2 control channel;
   - Conveys at least RA-preamble identifier, Timing Alignment information, initial UL grant and assignment of Temporary C-RNTI (which may or may not be made permanent upon RRC Contention Resolution);
   - Intended for one or multiple UEs in one DL-SCH message.
3) First scheduled UL transmission on UL-SCH:
   - Uses HARQ;
   - RLC TM: no segmentation;
   - Conveys at least UE identifier (C-RNTI if available);
   - In case of initial access and if the size of the message allows it, the initial NAS message (or something allowing to build the initial NAS message in eNB) can be included;
   - Size of the message is dynamic.
4) Contention Resolution on DL-SCH:
   - Not synchronised with message 3;
   - Content of the message is FFS;
   - HARQ is supported;

ONEPLUS EXHIBIT 1015
Page 46 of 82

- Addressed to the Temporary C-RNTI on L1/L2 control channel (at least for initial access):
  - For UE in RRC_CONNECTED, the use of C-RNTI, HARQ and the consequences thereof (e.g. delay impact on other UEs in conjunction with HARQ) are FFS;
- HARQ feedback is transmitted only by the UE which detects its own UE identity, as provided in message 3, echoed in the RRC Contention Resolution message.

At initial access, the four steps are:

1) Random Access Preamble on RACH;
2) Random Access Response generated by the MAC sublayer and transmitted on DL-SCH;
3) RRC Connection Request generated by the RRC layer and transmitted via CCCH on UL-SCH;
4) RRC Contention Resolution generated by the RRC layer and transmitted via CCCH or DCCH (FFS) on DL-SCH.

The Temporary C-RNTI is promoted to C-RNTI for a UE which detects RA success and does not already have a C-RNTI; it is dropped by others. A UE which detects RA success and already has a C-RNTI, resumes using its C-RNTI.

Random access procedure for initial access described above is modelled in Figure 10.1.5-2 below from L1 and L2/3 interaction point of view. L2/L3 receives indication from L1 whether ACK is received or DTX is detected after indication of Random Access Preamble transmission to L1. L2/3 indicates L1 to transmit first scheduled UL transmission (RRC Connection Request in case of initial access) or Random Access Preamble based on the indication from L1.

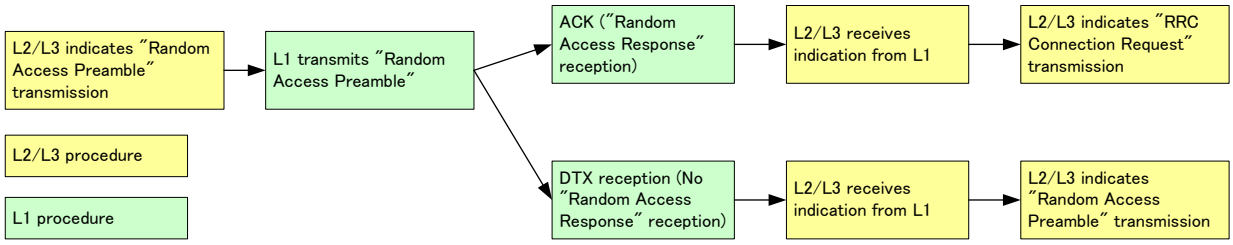

Figure 10.1.5-2: Interaction model between L1 and L2/3 for Random Access Procedure

10.1.6 Radio Link Failure

Two phases governs the behaviour associated to radio link failure as shown on Figure 10.1.6:

- First phase:
  - started upon radio problem detection;
  - leads to radio link failure detection;
  - no UE-based mobility;
  - based on timer or other (e.g. counting) criteria (T_1).
- Second Phase:
  - started upon radio link failure detection;
  - leads to RRC_IDLE;
  - UE-based mobility;
  - Timer based (T_2).

ONEPLUS EXHIBIT 1015
Page 47 of 82

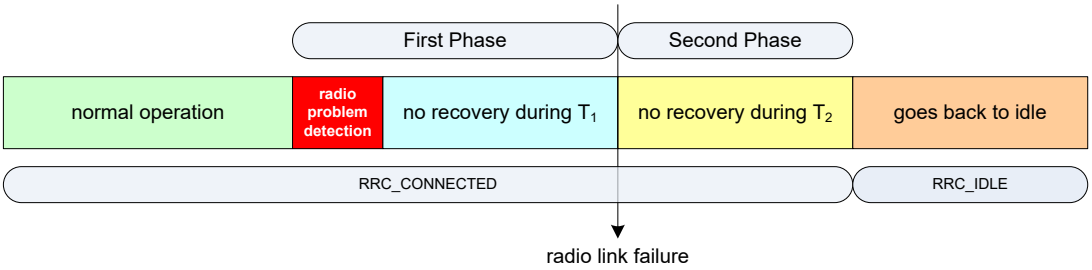

Figure 10.1.6: Radio Link Failure

Table 10.1.6 below describes how mobility is handled with respect to radio link failure:

Table 10.1.6: Mobility and Radio Link Failure

Cases	First Phase	Second Phase	T2 expired
UE returns to the same cell	Continue as if no radio problems occurred	Activity cannot be resumed without interaction between UE and eNB Procedure to be used is FFS Normally not via RRC_IDLE	Go via RRC_IDLE
UE selects a different cell from the same eNB	N/A	FFS	Go via RRC_IDLE
UE selects a cell of a different eNB	N/A	Go via RRC_IDLE	Go via RRC_IDLE

10.1.7 Radio Access Network Sharing

E-UTRAN shall support radio access network sharing based on support for multi-to-multi relationship between E-UTRAN nodes and EPC nodes (S1-flex).

If the E-UTRAN is shared by multiple operators, the system information broadcasted in each shared cell contains the PLMN-id of each operator (up to 6) and a single tracking area code (TAC) valid within all the PLMNs sharing the radio access network resources.

The UE shall be able to read up to 6 PLMN-ids, to select one of the PLMN-ids at initial attachment and to indicate this PLMN-id to the E-UTRAN in subsequent instances of the Random Access procedures (e.g. as defined in subclause 10.1.5). The E-UTRAN shall select an appropriate MME for the PLMN indicated by the UE. Once attached to an MME, the UE shall be able to indicate the allocated MME in subsequent instances of the Random Access procedures. Whether the indication of the selected PLMN or the allocated MME is contained in the temporary UE identity or signalled separately is FFS.

Handling of area restrictions for UE in LTE_ACTIVE shall follow the principles specified in sub-clause 10.4.

10.1.8 Handling of Roaming and Area Restrictions for UEs in LTE_ACTIVE

Handling of roaming/area restrictions and handling of subscription specific preferences in LTE_ACTIVE is performed in the eNB based on information provided by the EPC over the S1 interface.

10.2 Inter RAT

For inter RAT mobility, a list of carrier frequencies of inter-RAT neighbours is signalled to the UE (other information FFS).

ONEPLUS EXHIBIT 1015
Page 48 of 82

10.2.1 Cell reselection

10.2.2 Handover

Inter RAT HO is designed so that changes to GERAN and UTRAN are minimised. This can be done by following the principles specified for GERAN to/from UTRAN intersystem HO. In particular the following principles are applied to E-UTRAN Inter RAT HO design:

1. Inter RAT HO is network controlled through source access system. The source access system decides about starting the preparation and provides the necessary information to the target system in the format required by the target system. That is, the source system adapts to the target system. The actual handover execution is decided in the source system.

2. Inter RAT HO is backwards handover, i.e. radio resources are prepared in the target 3GPP access system before the UE is commanded by the source 3GPP access system to change to the target 3GPP access system.

3. To enable backwards handover, and while RAN level interfaces are not available, a control interface exists in CN level. In Inter RAT HO involving E-UTRAN access, this interface is between 2G/3G SGSN and corresponding MME/SAE GW.

4. The target access system will be responsible for giving exact guidance for the UE on how to make the radio access there (this includes radio resource configuration, target cell system information etc.). This information is given during the handover preparation and should be transported completely transparently through the source access system to the UE.

5. Mechanisms for avoiding or mitigating the loss of user data (e.g. forwarding or bi-casting) may be used until the 3GPP Anchor determines that it can send DL U-plane data directly to the target system.

6. The handover procedure should not require any UE to CN signalling in order for data to start to flow in the target system. This requires that the security context, UE capability context and QoS context is transferred (or translated) within the network between source and target system.

7. Similar handover procedure should apply for handovers of both real time and non-real time services.

10.2.3 Measurements

10.2.3.1 Inter-RAT handovers from E-UTRAN

Measurements to be performed by a UE for inter-RAT mobility can be controlled by E-UTRAN, using broadcast or dedicated control. In RRC_CONNECTED state, a UE shall follow the measurement parameters specified by RRC or MAC commands (FFS) directed from the E-UTRAN (e.g. as in UTRAN MEASUREMENT_CONTROL).

UE performs inter-RAT neighbour cell measurements during DL/UL idle periods that are provided by the network through suitable DRX/DTX period or packet scheduling if necessary.

NOTE: How the gaps are controlled, as well as how the scheduler knows the gaps required by the UE, is FFS.

10.2.3.2 Inter-RAT handovers to E-UTRAN

From UTRAN, UE performs E-UTRAN measurements by using idle periods created by compressed mode (CELL_DCH), FACH measurement occasions (CELL_FACH - FFS), or DRX (other states).

From GERAN, E-UTRAN measurements are performed in the same way as WCDMA measurements for handover to UTRAN: E-UTRAN measurements are performed in GSM idle frames in a time multiplexed manner. However, it should be discussed with GERAN how to ensure that inter-RAT measurements do not take too much measurement time, while the requested 3GPP inter-RAT measurements can be performed well enough.

Design constraints of 3GPP inter-RAT measurements should be considered when L1 details of E-UTRAN concept are defined.

ONEPLUS EXHIBIT 1015
Page 49 of 82

10.2.3.3 Inter-RAT cell reselection from E-UTRAN

In RRC_IDLE state, a UE shall follow the measurement parameters specified by the E-UTRAN broadcast (as in UTRAN SIB). The use of dedicated measurement control is FFS.

10.2.3.4 Limiting measurement load at UE

Introduction of E-UTRA implies co-existence of various UE capabilities. Each UE may support different combinations of RATs, e.g., E-UTRA, UTRA, GSM, and non-3GPP RATs, and different combinations of frequency bands, e.g., 800 MHz, 1.7 GHz, 2 GHZ, etc. Moreover, some UEs may support the full E-UTRA spectrum bandwidth of 20 MHz, whereas some UEs may support only a part of 20 MHz. Despite such heterogeneous environment, the measurement load at UE should be minimised. To limit the measurement load and the associated control load:

- E-UTRAN can configure the RATs to be measured by UE;
- The number of measurement criteria (event and periodic reporting criteria) should be limited (as in TS 25.133 subclause 8.3.2 [7]);
- E-UTRAN should be aware of the UE capabilities for efficient measurement control, to prevent unnecessary waking up of the measurement entity;
- The UE capabilities should be categorised to prevent diversion of capabilities and conformance test scenarios, FFS;
- Support for blind HO (i.e., HO without measurement reports from UE) is FFS.

10.2.4 Network Aspects

10.3 Inter 3GPP access system mobility

10.3.1 Cell reselection

10.3.2 Handover

10.3.3 Measurements

10.4 Area Restrictions

Information on which area restrictions to be applied during LTE_ACTIVE state is provided by the MME at context setup over the S1 interface.

The eNB shall store the UE restriction information and use it to determine whether the UE has access to radio resources in the E-UTRAN. The source eNB should apply restriction handling when selecting a target eNB.

The available UE restriction information shall be propagated by the source eNB over X2 at intra E-UTRAN handover.

11 Scheduling and Rate Control

In order to utilise the SCH resources efficiently, a scheduling function is used in MAC. In this subclause, an overview of the scheduler is given in terms of scheduler operation, signalling of scheduler decisions, and measurements to support scheduler operation.

ONEPLUS EXHIBIT 1015
Page 50 of 82

11.1 Basic Scheduler Operation

MAC in eNB includes dynamic resource schedulers that allocate physical layer resources for the DL-SCH and UL-SCH transport channels. Different schedulers operate for the DL-SCH and UL-SCH.

The scheduler should take account of the traffic volume and the QoS requirements of each UE and associated radio bearers, when sharing resources between UEs. Only "per UE" grants are used to grant the right to transmit on the UL-SCH (i.e. there are no "per UE per RB" grants).

Schedulers may assign resources taking account the radio conditions at the UE identified through measurements made at the eNB and/or reported by the UE.

Radio resource allocations can be valid for one or multiple TTIs.

Resource assignment consists of physical resource blocks (PRB) and MCS. Allocations for time periods longer than one TTI might also require additional information (allocation time, allocation repetition factor…).

Four possible types of allocation are defined:

- Short lived dynamic allocation: both PRB(s) and allowed MCS are allocated to a given UE for a defined number of TTIs;

NOTE: a UE may "operate" only during certain time periods of the radio frame (indicated from RRC).

- Short lived fixed allocation: PRB(s) are allocated to a given UE for a defined number of TTIs, and the allowed MCS is allocated for an undefined duration;

NOTE: a UE may "operate" only during certain time periods of the radio frame (indicated from RRC).

- Long lived dynamic allocation: PRB(s) are allocated to a given UE for an undefined duration, and the MCS is dynamically controlled by the network;

- Long lived fixed allocation: both PRB(s) and allowed MCS are allocated to a given UE for an undefined duration.

This is summarized on the figure below:

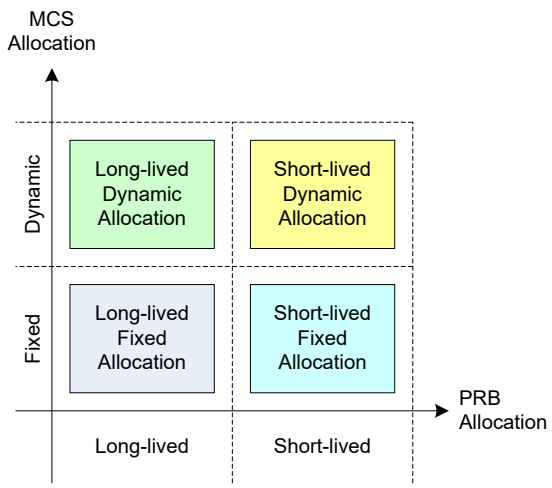

Figure 11.1: Allocation Types

For one UE, the allocation type may be different in UL and DL. Also there may be multiple simultaneous allocation types for the same UE.

Allocations are done one a per UE basis (i.e. not on a per radio bearer basis), but radio bearer restriction may apply for certain allocation type e.g. for long live allocation.

ONEPLUS EXHIBIT 1015
Page 51 of 82

In both uplink and downlink, E-UTRAN can dynamically allocate resources (PRBs and MCS) to UEs at each TTI via the C-RNTI (i.e. short lived dynamic allocation for one TTI). In uplink, when the UE does not have enough data to fill the allocated resource, padding is used.

11.2 Signalling of Scheduler Decisions

UEs identify whether resources are assigned to them by receiving a L1/L2 control channel. There may be separate L1/L2 control channels for uplink and downlink resource assignment.

Scheduling decisions are signalled via MAC messages or L1/L2 control channel. It is FFS whether resources can be assigned by other means e.g. MAC headers or RRC signalling.

11.3 Measurements to Support Scheduler Operation

Measurement reports are required to enable the scheduler to operate in both uplink and downlink. These include transport volume and measurements of a UEs radio environment. The time and frequency granularity of the UE radio environment measurement reports is FFS.

Uplink buffer status reports are needed to provide support for QoS-aware packet scheduling. Uplink buffer status reports refer to the data that is buffered in the logical channel queues in the UE MAC. The uplink packet scheduler in the eNB is located at MAC level. Uplink buffer status reports may be transmitted using MAC signalling (e.g. as a specific type of MAC control PDU). A way to separately signal buffer status reports for different QoS classes may be used. To define the exact content of buffer status reports and the possible use of physical layer signalling are FFS.

The buffer reporting scheme used in uplink should be flexible in order to support different types of data services. The buffer reporting criteria are setup and reconfigured on a per user basis or per radio bearer basis (FFS) using RRC or MAC signalling (FFS). The use of System Information should also be considered for the initial setup of default buffer reporting criteria (on a per cell basis). Constraints on how often uplink buffer reports are signalled from the UEs can be specified by the network to limit the overhead from sending the reports in the uplink.

It is FFS whether additional measurement information is required to support the classification of UEs between localised and distributed resource allocation.

It is FFS whether additional measurement information is required to support cell center / cell-edge resource subdivision.

11.4 Rate Control of GBR, MBR, and AMBR

11.4.1 Downlink

The eNB enforces the downlink MBR associated with a GBR bearer and the downlink AMBR associated with a group of Non-GBR bearers.

11.4.2 Uplink

The UE has an uplink rate control function which manages the sharing of uplink resources between radio bearers. RRC controls the uplink rate control function by giving each bearer a priority and a prioritised bit rate (PBR). In addition, an MBR per GBR bearer and an AMBR per group of Non-GBR bearers is also provided. The values signalled may not be related to the ones signalled via S1 to the eNB.

The uplink rate control function ensures that the UE serves its radio bearer(s) in the following sequence:

1. All the radio bearer(s) in decreasing priority order up to their PBR;
2. All the radio bearer(s) in decreasing priority order for the remaining resources assigned by the grant and the function ensures that the MBR and AMBR are not exceeded.

NOTE: In case the PBRs are all set to zero, the first step is skipped and the radio bearer(s) are served in strict priority order: the UE maximises the transmission of higher priority data.

If more than one radio bearer has the same priority, the UE shall serve these radio bearers equally.

ONEPLUS EXHIBIT 1015
Page 52 of 82

12 DRX in RRC_CONNECTED

In order to enable reasonable UE battery consumption, DRX in E-UTRAN is characterised by the following:

- Per UE mechanism (as opposed to per radio bearer);
- No RRC or MAC substate to distinguish between different levels of DRX;
- Available DRX values are controlled by the network and start from non-DRX up to *x* seconds. Value *x* may be as long as the paging DRX used in LTE_IDLE. Detailed values are FFS;
- Measurement requirement and reporting criteria can differ according to the length of the DRX interval i.e. long DRX intervals may experience more relaxed requirements;
- The network may send a threshold indicating to the UE that it does not need to make measurements of neighbouring cells if the radio quality of the serving cell (exact definition of the radio quality and possible dependency on DRX value is FFS) is above the threshold;
- Irrespective of DRX, UE may use first available RACH opportunity to send an UL measurement report;
- Immediately after sending a measurement report, the UE may change its DRX. This mechanism would be pre-configured by the eNB;
- HARQ operation related to UL data transmission is independent of DRX operation. Whether HARQ operation of DL data is independent of DRX operation is FFS;

13 QoS

13.1 QoS concept and bearer service architecture

The SAE bearer service layered architecture is depicted in Figure 13.1 below:

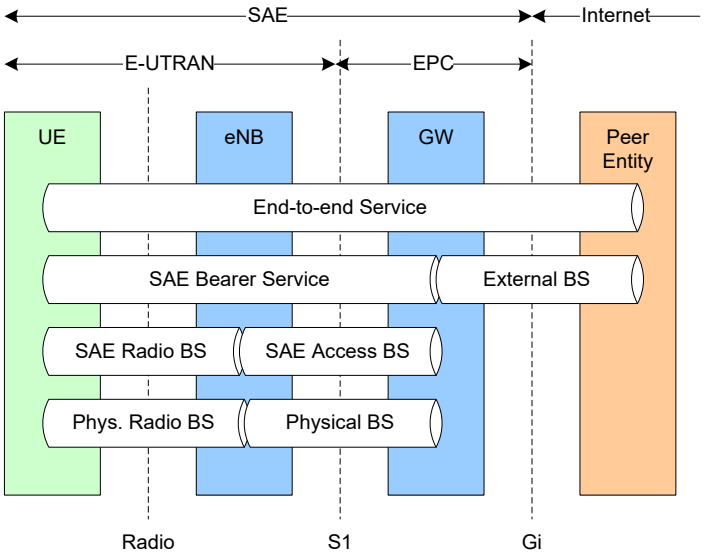

Figure 13.1: SAE Bearer Service Architecture

The SAE Bearer Service is used to provide the edge-to-edge QoS for service data flows. The SAE bearer consists of a SAE radio bearer and a SAE access bearer. The SAE Radio Bearer Service provides the transport of the SAE Bearer Service data units between eNB and UE according to the SAE QoS profile associated with each SAE bearer. The SAE

ONEPLUS EXHIBIT 1015
Page 53 of 82

Access Bearer Service provides the transport of the SAE Bearer Service data units between SAE Gateway and eNB according to the SAE QoS profile associated with each SAE bearer.

With respect to E-UTRAN, the following principles apply:

- There is a one-to-one mapping between an SAE Bearer and an SAE Radio Bearer;
- There is a one-to-one mapping between an SAE Radio Bearer and a logical channel.

13.2 Resource establishment and QoS signalling

14 Security

Note: Security functions needs to be re-discussed as a result of moving the PDCP from SAE Gateway down to the eNB.

14.1 Overview and Principles

The following principles apply to RRC security:

- The RRC keys are cryptographically separated from the CN keys used for NAS and end user data protection (making it impossible to use the RRC key to figure out a CN key).
- The RRC keys are either generated directly by a NAS (CN/UE) level AKA procedure, or derived in the CN/UE from key material that was generated by a NAS (CN/UE) level AKA procedure.
- The RRC keys are sent from the CN to the eNB when the UE is entering LTE_ACTIVE state (i.e. during RRC connection or S1 context setup).
- Key material for the RRC keys is sent between the eNBs during LTE_ACTIVE intra-E-UTRAN mobility.
- A sequence number is used as input to the ciphering and integrity protection of RRC. A given sequence number must only be used once for a given RRC key (except for identical re-transmission). The same sequence number can be used for both ciphering and integrity protection.
- A hyper frame number (HFN) (i.e. an overflow counter mechanism) is used in the eNB and UE in order to limit the actual number of sequence number bits that is needed to be sent over the radio with each RRC message. The HFN needs to be synchronized between the UE and eNB.

14.2 Security termination points

The table below describes the security termination points.

ONEPLUS EXHIBIT 1015
Page 54 of 82

Table 14.2 Security Termination Points

	Ciphering	Integrity Protection
NAS Signalling	Required and terminated in MME	Required and terminated in MME
U-Plane Data	Required and terminated in eNB (NOTE 1)	Not Required (NOTE 3)
RRC Signalling (AS)	Required and terminated in eNB (NOTE 2)	Required and terminated in eNB (NOTE 2)
MAC Signalling (AS)	Note required (NOTE 4)	Note required (NOTE 4)

NOTE 1: The protocol stack layer in which the ciphering takes place is FFS. The activation/deactivation of ciphering of the U-Plane is not controlled by the eNB.
NOTE 2: Key set for RRC protection cannot be used to derive NAS and user-plane keys.
NOTE 3: Integrity protection for U-Plane is not required and thus it is not supported between UE and SAE Gateway or for the transport of user plane data between eNB and SAE Gateway on S1 interface.
NOTE 4: SA3 needs to further study on whether buffer status reports from UEs to the eNBs in MAC layer need to be protected.

15 MBMS

15.1 MBMS control & functions

15.2 MBMS transmission

16 Radio Resource Management aspects

The purpose of radio resource management (RRM) is to ensure the efficient use the available radio resources and to provide mechanisms that enable E-UTRAN to meet radio resource related requirements identified in sub-clause 10 of 3GPP TR 25.913 [2]. In particular, RRM in E-UTRAN provides means to manage (e.g. assign, re-assign and release) radio resources taking into account single and multi-cell aspects.

16.1 RRM functions

16.1.1 Radio Bearer Control (RBC)

The establishment, maintenance and release of Radio Bearers involve the configuration of radio resources associated with them. When setting up a radio bearer for a service, radio bearer control (RBC) takes into account the overall resource situation in E-UTRAN, the QoS requirements of in-progress sessions and the QoS requirement for the new service. RBC is also concerned with the maintenance of radio bearers of in-progress sessions at the change of the radio resource situation due to mobility or other reasons. RBC is involved in the release of radio resources associated with radio bearers at session termination, handover or at other occasions.

RBC is located in the eNB.

16.1.2 Radio Admission Control (RAC)

The task of radio admission control (RAC) is to admit or reject the establishment requests for new radio bearers. In order to do this, RAC takes into account the overall resource situation in E-UTRAN, the QoS requirements, the priority levels and the provided QoS of in-progress sessions and the QoS requirement of the new radio bearer request. The goal of RAC is to ensure high radio resource utilization (by accepting radio bearer requests as long as radio resources available) and at the same time to ensure proper QoS for in-progress sessions (by rejecting radio bearer requests when they cannot be accommodated).

ONEPLUS EXHIBIT 1015
Page 55 of 82

RAC is located in the eNB.

16.1.3 Connection Mobility Control (CMC)

Connection mobility control (CMC) is concerned with the management of radio resources in connection with idle or active mode mobility. In idle mode, the cell reselection algorithms are controlled by setting of parameters (thresholds and hysteresis values) that define the best cell and/or determine when the UE should select a new cell. Also, E-UTRAN broadcasts parameters that configure the UE measurement and reporting procedures. In active mode, the mobility of radio connections has to be supported. Handover decisions may be based on UE and eNB measurements. In addition, handover decisions may take other inputs, such as neighbour cell load, traffic distribution, transport and hardware resources and Operator defined policies into account.

CMC is located in the eNB.

16.1.4 Dynamic Resource Allocation (DRA) - Packet Scheduling (PS)

The task of dynamic resource allocation (DRA) or packet scheduling (PS) is to allocate and de-allocate resources (including buffer and processing resources and resource blocks (i.e. chunks)) to user and control plane packets. DRA involves several sub-tasks, including the selection of radio bearers whose packets are to be scheduled and managing the necessary resources (e.g. the power levels or the specific resource blocks used). PS typically takes into account the QoS requirements associated with the radio bearers, the channel quality information for UEs, buffer status, interference situation, etc. DRA may also take into account restrictions or preferences on some of the available resource blocks or resource block sets due to inter-cell interference coordination considerations.

DRA is located in the eNB.

16.1.5 Inter-cell Interference Coordination (ICIC)

Inter-cell interference coordination has the task to manage radio resources (notably the radio resource blocks) such that inter-cell interference is kept under control. ICIC is inherently a multi-cell RRM function that needs to take into account information (e.g. the resource usage status and traffic load situation) from multiple cells. The preferred ICIC method may be different in the uplink and downlink.

ICIC is located in the eNB.

16.1.6 Load Balancing (LB)

Load balancing has the task to handle uneven distribution of the traffic load over multiple cells. The purpose of LB is thus to influence the load distribution in such a manner that radio resources remain highly utilized and the QoS of in-progress sessions are maintained to the extent possible and call dropping probabilities are kept sufficiently small. LB algorithms may result in hand-over or cell reselection decisions with the purpose of redistribute traffic from highly loaded cells to underutilized cells.

LB is located in the eNB.

16.1.7 Inter-RAT Radio Resource Management

Inter-RAT RRM is primarily concerned with the management of radio resources in connection with inter-RAT mobility, notably inter-RAT handover. At inter-RAT handover, the handover decision may take into account the involved RATs resource situation as well as UE capabilities and Operator policies. The importance of Inter-RAT RRM may depend on the specific scenario in which E-UTRAN is deployed. Inter-RAT RRM may also include functionality for inter-RAT load balancing for idle and active mode UEs.

ONEPLUS EXHIBIT 1015
Page 56 of 82

16.2 RRM architecture

16.2.1 Centralised Handling of certain RRM Functions

16.2.2 De-Centralised RRM

16.2.3 Load balancing control

17 RF aspects

17.1 Spectrum deployments

18 UE capabilities

RRC signalling carries RRC capability and NAS signalling carries NAS capability. Some capability information may be stored in the EPC. In the uplink, some capability information may be sent early in e.g. RRC_CONNECTION_REQUEST. In the downlink, inquiry procedure of the UE capability may be supported.

19 S1 Interface

19.1 S1 User plane

The S1 user plane interface (S1-U) is defined between the eNB and the SAE GW. The S1-U interface provides non guaranteed delivery of user plane PDUs between the eNB and the SAE GW. The user plane protocol stack on the S1 interface is shown in Figure 19.1. The transport network layer is built on IP transport and GTP-U is used on top of UDP/IP to carry the user plane PDUs between the eNB and the SAE GW.

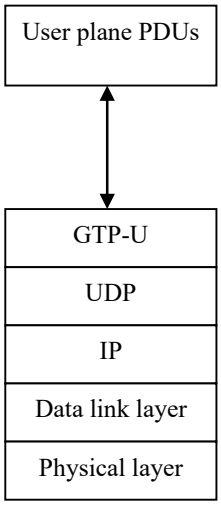

Figure 19.1: S1 Interface User Plane (eNB-SAE GW)

ONEPLUS EXHIBIT 1015
Page 57 of 82

19.2 S1 Control Plane

The S1 control plane interface (S1-MME) is defined between the eNB and the MME. The control plane protocol stack of the S1 interface is shown on Figure 19.2. The transport network layer is built on IP transport, similarly to the user plane but for the reliable transport of signalling messages SCTP is added on top of IP. The application layer signalling protocol is referred to as S1-AP (S1 Application Protocol).

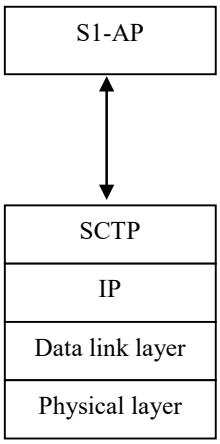

Figure 19.2: S1 Interface Control Plane (eNB-MME)

The SCTP layer provides the guaranteed delivery of application layer messages.

In the transport IP layer point-to-point transmission is used to deliver the signalling PDUs.

A single SCTP association per S1-MME interface instance shall be used with one pair of stream identifiers for S1-MME common procedures. Only a few pairs of stream identifiers should be used for S1-MME dedicated procedures. The upper limit for the number of stream identifiers for dedicated procedures is FFS and will be decided during the stage 3 work.

MME communication context identifiers that are assigned by the MME for S1-MME dedicated procedures and eNB communication context identifiers that are assigned by the eNB for S1-MME dedicated procedures shall be used to distinguish UE specific S1-MME signalling transport bearers. The communication context identifiers are conveyed in the respective S1-AP messages.

19.2.1 S1 Interface Functions

Note: The following list of S1 functions reflects the status of agreements in RAN3, might be extended in forthcoming meetings.

- SAE Bearer Service Management function:
  - Setup, release.
- Mobility Functions for UEs in LTE_ACTIVE:
  - Intra-LTE Handover;
  - Inter-3GPP-RAT Handover.
- S1 Paging function:
- NAS Signalling Transport function;
- S1-interface management functions:
  - Error indication.
- Network Sharing Function;

ONEPLUS EXHIBIT 1015
Page 58 of 82

- Roaming and Area Restriction Support function;
- NAS Node Selection Function;
- Initial Context Setup Function.

19.2.1.1 S1 Paging function

The paging function supports the sending of paging requests to all cells of the TA(s) the UE is registered.

Paging requests are sent to the relevant eNodeBs according to the mobility information kept in the UE's MM context in the serving MME.

19.2.1.2 S1 UE Context Management function

In order to support UEs in LTE_ACTIVE, UE contexts need to be managed, i.e. established and released in the eNodeB and in the EPC to support user individual signalling on S1.

19.2.1.3 Initial Context Setup Function

NOTE: The naming of the function/procedure is left to be FFS.

The Initial Context Setup function supports the establishment of the necessary overall initial UE Context including SAE Bearer context, Security context, roaming restriction, UE capability information, UE S1 signalling connection ID, etc. in the eNB to enable fast Idle-to-Active transition.

In addition to the setup of overall initial UE Contexts, Initial Context Setup function also supports the piggy-backing of the corresponding NAS messages. Initial Context Setup is initiated by the MME.

19.2.2 S1 Interface Signalling Procedures

Note: The following list of S1 procedures reflects the status of agreements in RAN3, might be extended in forthcoming meetings.

- SAE Bearer signalling procedures:
  - SAE Bearer Setup procedure;
  - SAE Bearer Release procedure (EPC initiated);
  - SAE Bearer Release procedure (eNB initiated).
- Handover signalling procedures;
- Paging procedure;
- NAS transport procedure:
  - UL direction (Initial UE);
  - DL direction (Direct Transfer).
- Error Indication procedure:
  - E-UTRAN initiated error indication procedure;
  - EPC initiated error indication procedure.
- Initial Context Setup procedure;

ONEPLUS EXHIBIT 1015
Page 59 of 82

19.2.2.1 Paging procedure

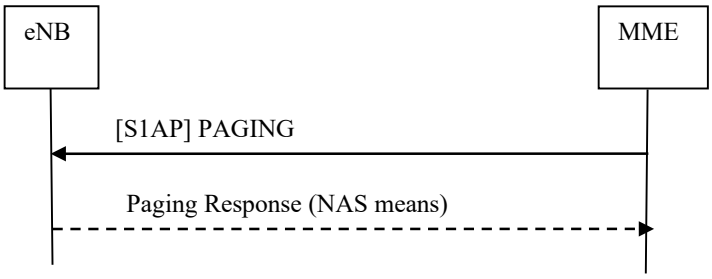

Figure 19.2.2.1: Paging procedure

The MME initiates the paging procedure by sending the PAGING message to each eNB belonging to the tracking area(s) in which the UE is registered.

The paging response back to the MME is initiated on NAS layer and is sent by the eNodeB based on NAS-level routing information.

19.2.2.2 S1 UE Context Release procedure

The S1 UE Context Release procedure causes the eNB to remove all UE individual signalling resources and the related user data transport resources. This procedure is initiated by the EPC and may be triggered on request of the serving eNB.

19.2.2.2.1 S1 UE Context Release (EPC triggered)

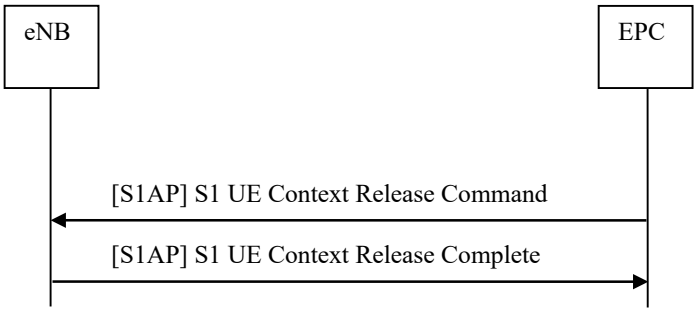

Figure 19.2.2.2.1: S1 UE Context Release procedure (EPC triggered)

- The EPC initiates the UE Context Release procedure by sending the S1 UE Context Release Command towards the E-UTRAN. The eNodeB releases all related signalling and user data transport resources.
- The eNB confirms the S1 UE Context Release activity with the S1 UE Context Release Complete message.
- In the course of this procedure the EPC releases all related resources as well, except context resources in the EPC for mobility management and the default SAE Bearer configuration.

19.2.2.2.2 S1 UE Context Release Request (eNB triggered)

The S1 UE Context Release Request procedure is initiated for E-UTRAN internal reasons and comprises the following steps:

- The eNB sends the S1 UE Context Release Request message to the EPC.
- The EPC triggers the EPC initiated UE context release procedure.

ONEPLUS EXHIBIT 1015
Page 60 of 82

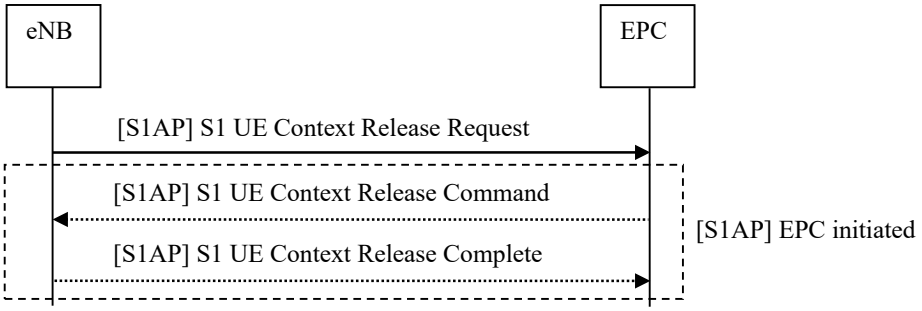

Figure 19.2.2.2.2: S1 UE Context Release Request procedure (eNB triggered) and subsequent S1 UE Context Release procedure (EPC triggered)

19.2.2.3 Initial Context Setup procedure

NOTE: The naming of the function/procedure is left to be FFS.

The Initial Context Setup procedure establishes the necessary overall initial UE context in the eNB in case of an Idle-to Active transition. The Initial Context Setup procedure is initiated by the MME.

The Initial Context Setup procedure comprises the following steps:

- The MME initiates the Initial Context Setup procedure by sending INITIAL CONTEXT SETUP REQUEST to the eNB. This message may include general UE Context (e.g. security context, roaming restrictions, UE capability information, UE S1 signalling connection ID, etc.), SAE bearer context (Serving SAE-GW TEID, QoS information), and may be piggy-backed with the corresponding NAS message.
- Upon receipt of INITIAL CONTEXT SETUP REQUEST, the eNB setup the context of the associated UE, and perform the necessary RRC signalling towards the UE, e.g. Radio Bearer Setup procedure.
- The eNB responds with INITIAL CONTEXT SETUP COMPLETE to inform a successful operation, and with INITIAL CONTEXT SETUP FAILURE to inform an unsuccessful operation.

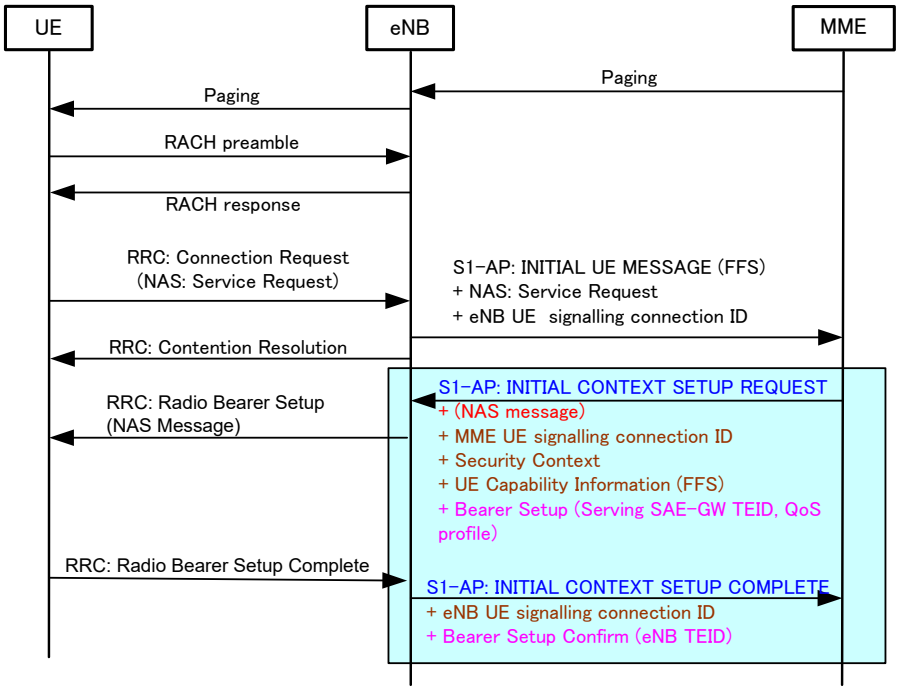

Figure 19.2.2.3: Initial Context Setup procedure (highlighted in blue) in Idle-to-Active procedure

ONEPLUS EXHIBIT 1015
Page 61 of 82

20 X2 Interface

20.1 User Plane

20.2 Control Plane

The X2 control plane interface (X2-CP) is defined between two neighbour eNBs. The control plane protocol stack of the X2 interface is shown on Figure 20.2 below. The transport network layer is built on SCTP on top of IP. The application layer signalling protocol is referred to as X2-AP (X2 Application Protocol).

Note: Exact naming of application protocol FFS.

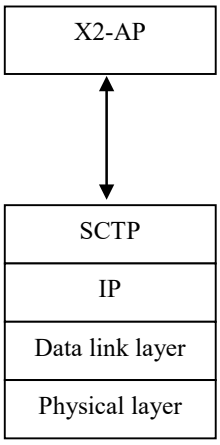

Figure 20.2: X2 Interface Control Plane

A single SCTP association per X2-C interface instance shall be used with one pair of stream identifiers for X2-C common procedures. Only a few pairs of stream identifiers should be used for X2-C dedicated procedures. The upper limit for the number of stream identifiers for dedicated procedures is FFS and will be decided during the stage 3 work.

Source-eNB communication context identifiers that are assigned by the source-eNB for X2-C dedicated procedures, and target-eNB communication context identifiers that are assigned by the target-eNB for X2-C dedicated procedures, shall be used to distinguish UE specific X2-C signalling transport bearers. The communication context identifiers are conveyed in the respective X2AP messages.

20.2.1 X2-CP Functions

The X2AP protocol supports the following functions:

- Intra LTE-Access-System Mobility Support for UE in LTE_ACTIVE:
  - Context transfer from source eNB to target eNB;
  - Control of user plane tunnels between source eNB and target eNB.
- General X2 management and error handling functions:
  - Error indication.

20.2.2 X2-CP Procedures

The elementary procedures supported by the X2AP protocol are listed in Table 20.2.2 below:

ONEPLUS EXHIBIT 1015
Page 62 of 82

Table 20.2.2: X2-CP Procedures

Elementary Procedure	Initiating Message	Response Message of Successful Outcome	Response Message of Unsuccessful Outcome	Description & comments
Handover Preparation	HANDOVER REQUEST	HANDOVER SUCCESS	HANDOVER FAILURE	Used by source eNB to request a handover the target eNB
Release Resource	RELEASE RESOURCE	-	-	Used by the target eNB to signal to source eNB that control plane resources for the handed over UE context can be released.
Error Indication	ERROR INDICATION	-	-	Used by the eNB to report errors in a receiv message provided they cannot be reported an appropriate response message.

Note: this initial list might be extended.

21 System and Terminal complexity

21.1 Overall System complexity

21.2 Physical layer complexity

21.3 UE complexity

22 Support for self-configuration and self-optimisation

22.1 Definitions

This concept includes several different functions from eNB activation to radio parameter tuning. Figure 19.1 is a basic framework for all self-configuration /self-optimization functions.

Self-configuration process is defined as the process where newly deployed nodes are configured by automatic installation procedures to get the necessary basic configuration for system operation.

This process works in pre-operational state. Pre-operational state is understood as the state from when the eNB is powered up and has backbone connectivity until the RF transmitter is switched on.

As described in Figure 21.1, functions handled in the pre-operational state like:

- Basic Setup and
- Initial Radio Configuration

are covered by the Self Configuration process.

NOTE: depending on the final chosen functional distribution in RAN, the feasibility of following items should be studied e.g.:

- To obtain the necessary interface configuration;
- Automatic registration of nodes in the system can be provided by the network;
- Alternative possibilities for nodes to obtain a valid configuration;

ONEPLUS EXHIBIT 1015
Page 63 of 82

- The required standardization scope.

Self-optimization process is defined as the process where UE & eNB measurements and performance measurements are used to auto-tune the network.

This process works in operational state. Operational state is understood as the state where the RF interface is additionally switched on.

As described in Figure 21.1, functions handled in the operational state like:

- Optimization / Adaptation

are covered by the Self Optimization process.

NOTE: depending on the final chosen functional distribution in RAN the feasibility of following items should be studied e.g.:

- The distribution of data and measurements over interfaces relevant to RAN3;
- Functions/entities/nodes in charge of data aggregation for optimization purpose;
- Dependencies with O&M and O&M interfaces, in the self optimization process;
- The required standardization scope.

The architecture of logical self-configuration/optimization functionality is FFS.

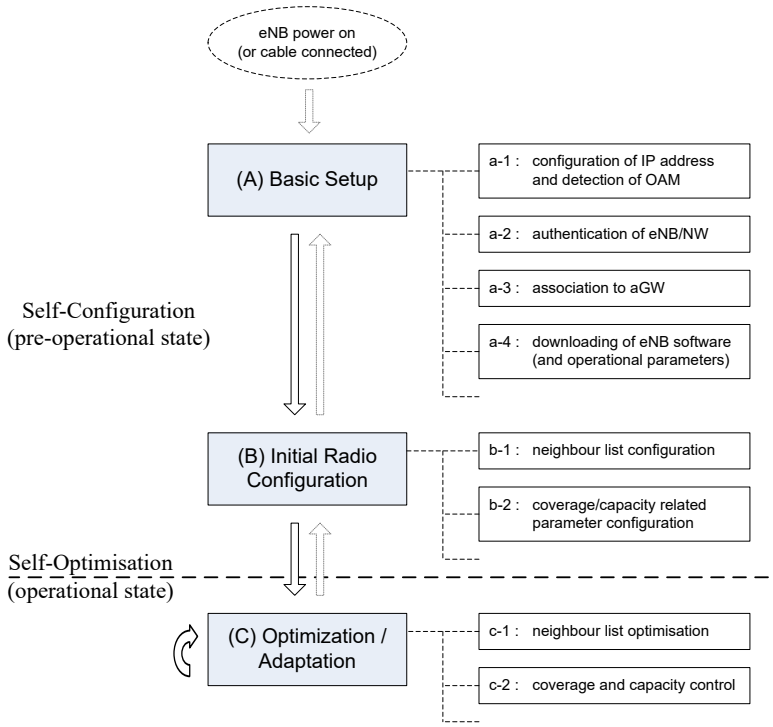

Figure 21.1: Ramifications of Self-Configuration /Self-Optimization functionality

ONEPLUS EXHIBIT 1015
Page 64 of 82

23 Others

23.1 Support for real time IMS services

ONEPLUS EXHIBIT 1015
Page 65 of 82

Annex A (informative): NAS Overview

This subclause provides for information an overview on services and functions provided by the NAS control protocol..

A.1 Services and Functions

The main services and functions of the NAS sublayer include:

- SAE Bearer control (see 3GPP TR 23.882 [6]);
- LTE_IDLE mobility handling;
- Paging origination;
- Configuration and control of Security.

A.2 NAS protocol states & state transitions

The NAS control protocol uses the following states:

- **LTE_DETACHED**:
  - No RRC entity.
- **LTE_IDLE**:
  - RRC_IDLE State;
  - Some information is stored in the UE and in the network:
    - IP address, etc;
    - Security association (keys, etc);
    - UE capability information (FFS);
    - Radio Bearers (FFS);
  - State transition decided in eNB or EPC (FFS);
- **LTE_ACTIVE**:
  - RRC_CONNECTED State;
  - State transition decided in eNB or EPC (FFS);

The following figure reflects how the NAS states relate to the RRC:

ONEPLUS EXHIBIT 1015
Page 66 of 82

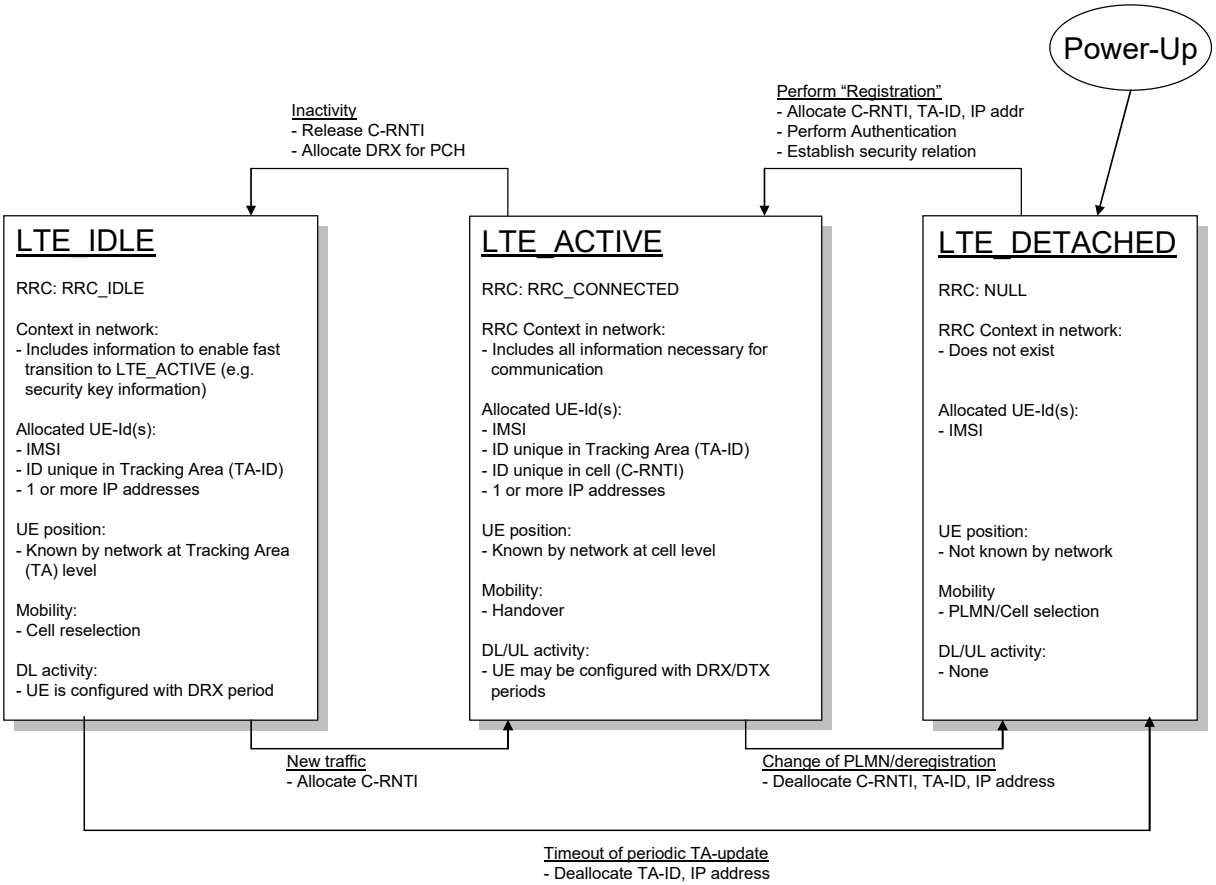

Figure A.2: E-UTRAN RRC protocol states

NOTE: The applicability of the ID unique in Tracking Area (TAID) in LTE_DETACHED is FFS.

The UE context in the EPC will discriminate the 3 states. The UE context in the eNB will only exist in the LTE_ACTIVE state.

ONEPLUS EXHIBIT 1015
Page 67 of 82

Annex B (informative): MAC and RRC Control

The E-UTRA supports control signalling in terms of MAC control signalling (L1/L2 control channel and MAC control PDU) and RRC control signalling (RRC message).

B.1 Difference between MAC and RRC control

The different characteristics of MAC and RRC control are summarized in the table below.

Table B.1: Summary of the difference between MAC and RRC control

	MAC control		RRC control
Control entity	**MAC**		**RRC**
Signalling	L1/L2 control channel	MAC control PDU	RRC message
Signalling reliability	~ 10^{-2} (no retransmission)	~ 10^{-3} (after HARQ)	~ 10^{-6} (after ARQ)
Control delay	Very short	Short	Longer
Extensibility	None or very limited	Limited	High
Security	No integrity protection No ciphering	No integrity protection No ciphering	Integrity protected Ciphering (FFS)

The main difference between MAC and RRC control lies in the signalling reliability. Due to the signalling reliability, signalling involving state transitions and radio bearer configurations should be performed by RRC. Basically, all signalling performed by RRC in UTRA should also be performed by RRC also for E-UTRA.

B.2 Classification of MAC and RRC control functions

The table below illustrates the classification of MAC and RRC control functions for E-UTRAN.

Table B.2: Classification of MAC and RRC control functions

		Controlled configuration/parameters
MAC control signalling	**L1/L2 control channel**	Short-lived (PRB) and dynamic (MCS) allocation Long-lived (PRB) and fixed (MCS) allocation (FFS) Timing Advance (FFS)
	MAC control PDU	Timing Advance (FFS) RLC related control PDU (FFS)
RRC control signalling	**RRC message**	Long-lived (PRB) and fixed (MCS) allocation (FFS) Activation/deactivation of long-lived (PRB) and/or fixed (MCS) allocation (FFS) TTI configuration for variable TTI length control (FFS) Static parameter configuration for UE inactivity control within RRC_ACTIVE (e.g. DRX/DTX periods)

ONEPLUS EXHIBIT 1015
Page 68 of 82

Annex C (informative): System Information

This annex provides an overview of the classification and division of system information between static and flexible parts. Considerations about dedicated distribution of system information are also included.

C.1 SI classification

Five categories are identified for system information classification:

1. Information valid across multiple cells;
2. Information needed at cell/PLMN search;
3. Information needed prior to cell camping;
4. Information needed before cell access;
5. Information needed while camping on a cell.

From UEs' point of view, the information that is needed at cell selection and prior to camping are very similar. Before a UE can camp on a cell, it needs to know if the access is allowed in that cell. Thus it would be very beneficial to know all access restrictions already at cell search phase.

C.1.1 Information valid across multiple cells

The pieces of information that can be valid across multiple cells are:

- A-GNSS assistance data;
- PLMN identity(ies);
- Tracking area identity;

Note: the above text will be revised if it is agreed that a cell can be a member of more than one tracking area.

- Predefined configuration information;
- System Frame Number if it does not change from cell to cell (in case of synchronized network);
- Some measurement/mobility information (FFS).

C.1.2 Information needed at cell/PLMN search

In order to support full mobility within the serving frequency layer, the UEs need to perform cell search rather often and thus it is seen very important that the information needed in cell search phase is readily available, thereby improving cell search times and minimizing UE power consumption. If system information decoding is needed for identifying a cell, fast system information reception is needed in order to avoid too long identification times. For optimising PLMN search and make PLMN search fast and non-complex, the information needed for PLMN search should be easily available. The pieces of information that are needed at cell/PLMN search are:

- PLMN identity(ies): in order to acquire information to which PLMN the cell belongs, UEs need to receive PLMN identity(ies);

NOTE: There may be multiple PLMN identities for one cell.

- Measurement cell identity (FFS): there needs to be a cell identity in the system information, in order to allow UEs to identify the cell reliably for measurement purposes.

ONEPLUS EXHIBIT 1015
Page 69 of 82

NOTE: UEs may identify the cell also based on the reference sequence detection;
There is another cell identity that identifies the cell within e.g. PLMN.

NOTE: UEs may have to check possible cell access restrictions before selecting cell/PLMN;
For cell/PLMN search UEs might need some L1 parameters.

C.1.3 Information needed prior to cell camping

Before a UE can camp on a cell, it needs to know any access related parameters in order to avoid camping on cells where access is forbidden. Thus prior to camping on a cell, a UE needs to know the following information:

- Any cell access restriction parameters, e.g.:
  - Tracking area identity: if the forbidden TA concept is adopted from legacy systems, then the UE needs to know whether the cell belongs to such forbidden TA.

Note: the above text will be revised if it is agreed that a cell can be a member of more than one tracking area.

  - Cell barring status and cell reservation status (FFS if needed per PLMN): the UE needs to know whether the cell is barred or reserved in order to avoid camping on a barred cell. Possibly also barring time might be needed in order to avoid UE to poll barring time frequently from the system information. Another option is that barring status is indicated also in the neighbour cell list.
  - Radio access limitation parameters:
    - Any radio condition parameters that limit the access to the cell e.g. similar to GSM C1/S criteria;
    - It is FFS if we need to have some band information indication also, in order to allow UEs to check possible band support before camping on the cell.

NOTE: UE may need some L1 parameters prior to camping.

C.1.4 Information needed prior to cell access

Once a UE has camped on a cell, the information needed prior to cell access (transmission/reception) includes at least:

- System Frame Number (SFN) (FFS)
  - SFN is probably needed by the UE to understand the scheduling parameters (e.g. scheduling information for secondary SI, RACH, PCH, E-MBMS etc.)
- L1 information, example set of needed L1 parameters:

Note: RAN1 needs to define what parameters are needed at this phase.

  - Carrier Bandwidth: FFS if separate bandwidths for UL and DL are needed;
  - Carrier center frequency (FFS);
  - Cyclic Prefix parameters: in order to decode DL-SCH UE needs to know the CP length arrangements;
  - MIMO related parameters: in order to take advantage of the multi-antenna transmissions like MIMO, the UE needs to know parameters of number of TX antennas, DL/UL pre-coding matrices, etc...;
  - Band Information: may be needed if the same DL carrier frequency has variable UL carrier frequency;
  - L1/L2 signalling channel structure parameters: if L1/L2 signalling channel has variable configurations, the UE may need to know its channel structure at least partly. L1/L2 signalling is crucial to receive any allocation information. If Random Access Response is transmitted without L1/L2 signalling (e.g. synchronous transmission with Random Access Preamble), this information might not be required;
- RACH parameters (needed by the UE to start usage of RACH):

ONEPLUS EXHIBIT 1015
Page 70 of 82

- RACH scheduling information: UE needs to know where in time (sub-frame) and frequency (Physical Resource Units) the RACH channel is located;
- RACH sequences: UE needs to know the RACH set of sequences to choose from. The sequences may not be fully of equal meaning (e.g. CQI can be classified for the sequences in a specific way);
- Access class restrictions: access class restrictions might be needed to limit the number of possible UEs using RACH;
- Persistence values: possible persistence value scheme parameters are needed for RACH usage;
- Other parameters related to RACH: UE needs to know the timers and parameters related to RACH e.g. how often the UE retransmits RACH and how many times the retransmission is allowed etc;
- RACH power control parameters: UE needs to know parameters related to UL power control.

C.1.5 Information needed while camping on a cell

When a UE has camped on a cell, it needs to continue measuring the neighbouring cells in order to stay camped. The pieces of information required for that are:

- Measurement parameters:
  - In order for the UE to start mobility procedures, it needs to receive parameters e.g. of reporting periods, reporting event parameters, time to trigger etc. UEs in RRC_IDLE state need cell reselection parameters. UEs in RRC_CONNECTED state need parameters of the neighbour cells e.g. for handover and for error recovery cases.
  - Neighbour cell lists are needed to start neighbour cell measurements. UEs in different states may use different sets of neighbour cell lists. Neighbour cell list may contain following parameters:
    - Some L1 parameters: FFS what parameters are needed in the neighbour cell list;
    - All information that is needed for camping: see sub-clauses C.2.2 and C.2.3 (FFS);
    - Synchronization information: indicating whether the neighbouring cell is synchronized to the current cell i.e. the cell sending the neighbour cell list (FFS);
    - PLMN identity(ies) & tracking area identity (FFS);

Note: the above text will be revised if it is agreed that a cell can be a member of more than one tracking area.

  - Other 3GPP RAT information: e.g. neighbour cell information of GERAN/UTRAN cells;
  - Information of non-3GPP access systems (e.g. WIMAX).
- Secondary NAS parameters:
  - An y NAS parameters that were not presented earlier e.g. cell identity uniquely identifying cell within wide area e.g. PLMN;
  - Cell identity (PLMN level) (FFS if this should be in category “Information needed prior to cell access”).
- Secondary UE timer values: any timer values that affect UE’s behaviour.
- Paging parameters: UEs in LTE_IDLE state need to receive paging parameters e.g. DRX periods and scheduling.
- Clock time (FFS): the network might send system clock in order to let UEs update their clock time e.g. in the user interface;
- MBMS service parameters: any parameters needed for MBMS reception e.g. MBMS multiplexing parameters, MBMS frequency;

NOTE: the presence of these parameters also indicate the presence of MBMS service in the cell (dedicated or mixed cell).

ONEPLUS EXHIBIT 1015
Page 71 of 82

- Signalling Radio Bearer parameters: may be broadcasted unless they are standardized.

C.1.6 Thoughts about category division

From UEs' point of view the categories in sub-clauses C.1.2 and C.1.3 are very similar. Thus it is questionable whether we need to differentiate procedures between cell search/selection/camping and PLMN search.

From UEs' point of view, the difference between the procedure for cell search during RRC_CONNECTED and the procedure for cell search during RRC_IDLE state maybe small. When the UE is in RRC_CONNECTED state, it measures the neighbour cell and executes handovers commanded by the network.

C.2 Division of SI between static and flexible parts

System information distribution can be classified into two distinctive parts: static and flexible. Static part is sent more often, say once per frame, in the cell and has quite a limited capacity for information transfer. The flexible part has flexible amount of scheduled resources available and thus most of the SI information is contained there.

C.2.1 Static part

The static parts of the System Information are:

- L1 information in order to decode the rest of the information

Note: detailed information on the required information will be defined by RAN1;

- Measurement Cell identity (FFS): it may be possible that L1 channels do not identify the cell. Then some Cell identity needs to be sent on system information part;
- Any cell access restriction parameters e.g.:
  - Tracking area identity: if forbidden TA concept is adopted from legacy systems then UEs need to know whether the cell belongs to forbidden TA;

Note: the above text will be revised if it is agreed that a cell can be a member of more than one tracking area.

  - Cell barring and cell reservation status (FFS if needed per PLMN): UEs need to know whether cell is barred or reserved in order to avoid camping on barred cell. Possibly also barring time might be needed in order to avoid UEs to poll barring time frequently from the system information;
  - Radio access limitation parameters: any radio condition parameters that limit the access to the cell e.g. similar to GSM C1/S criteria;
  - PLMN identity(ies): in order to acquire information to which PLMN cell belongs, UEs need to receive PLMN identity(ies).

NOTE: there may be multiple PLMN identities for one cell.

- Scheduling parameters:
  - All of the scheduling information of flexible part or part of scheduling information (e.g. scheduling block) of flexible part. If static part consists of multiple SI blocks then it may be necessary to have scheduling information of those blocks in the static part.
    - Scheduling block defines, from where (time and frequency resources) to decode the SI blocks of the scheduled flexible part. It may be possible that scheduling of scheduling block is standardized, then this information can be omitted from the static part. If several types of scheduling blocks are defined , scheduling information might be sent for each scheduling block.
- Value_tag(s): informs whether the information transmitted on the flexible part has changed. This is needed in order to avoid UEs from reading any unchanged information repeatedly. Another possibility is to send this information in L1/L2 signalling channel, but possibly it would cause too much overhead.

ONEPLUS EXHIBIT 1015
Page 72 of 82

NOTE: It also is possible to include Value_tag for SI on the flexible part indicating more precisely what changes have occurred in the system information.

NOTE: There may be a need for indicating changes in static part with value tag also, if static part consists of multiple SI blocks.

Table C.2.1 gives an estimate of the size of the elements mentioned above.

Table C.2.1: Initial rough estimates for static part capacity requirement

Information element	Bits
Cyclic Prefix (FFS)	2
Carrier BW (FFS)	3-8
MIMO parameters (FFS)	2 (+ 3)
Cell Id (FFS)	9
Tracking Area Id (+ FFS how many additional)	[16-28]
Cell Barring status+ possible Time of barring	1+4
Cell reservation status	[2]
Radio access limitation parameters	12
PLMN id(s) maximum of 5 (24 bits per one) - see Note	120
Scheduling parameters	(12-108)
Value Tag	4
SFN (FFS)	11

NOTE: It might not be necessary to send the Mobile Country Code part of the PLMN identity for each indicated PLMN to limit the number of bits.

C.2.2 Flexible part

The flexible part has different types of Information Elements which require independent scheduling in order to allow fast enough reception and not to waste transmission capacity. For example, the requirement to receive cell access parameters is very different than e.g. the clock time. Thus following flexible part division should be considered:

- Scheduling block: scheduling information of the secondary part of the System Information.
- Access parameters:
  - All parameters not present in the primary part (e.g. some L1 parameters);
  - RACH parameters;
  - Power control parameters;
  - Paging parameters;
  - Any timer values needed for operating in the cell and in the network.
- Measurement related parameters:
  - Neighbour cell lists;
  - Cell selection/reselection parameters;

NOTE: Some of these parameters are included in the static part element “Radio access limitation parameters.”

  - Measurement control information;
- Non vital information:
  - Clock time;
  - Positioning (A-GNSS etc.) information;

ONEPLUS EXHIBIT 1015
Page 73 of 82

- Service parameters (e.g. MBMS parameters);
- Secondary NAS parameters.

C.2.3 Information whose location is FFS

The location of the following information is FFS:

- System Frame Number: SFN might be needed very fast i.e. for HO purposes. SFN might be needed also for decoding scheduling block parameters, but on the other hand it might be requested not to send often changing information on the static part in order to be able to make time soft combining. Further investigation on the SFN broadcasting is thus needed.

C.2.4 Dedicated part

The dedicated part is embedded in the RRC message that is meant for sending System Information Elements in unicast mode e.g. for HO purposes, positioning purposes …. The UE needs some information for the neighbouring cell to access it, this is needed to limit the interruption times caused by HO execution. When a UE receives a HO COMMAND it needs at least following information from the target cell:

- All information in the static part (see sub-clause C.2.1): may be received by the UE by itself;
- Most of the information from the access parameters (see sub-clause C.2.2): is favourably delivered by dedicated manner via the source cell, because the UE might not have time to get all the necessary secondary SI from the target cell;
- System Frame Number is needed to minimize the interruption times during the HO procedure. Most probably the UE needs to receive (at least confirm) the SFN directly by the neighbour cell SI reading, because giving the SFN via source cell may cause some inaccuracy to the SFN.

ONEPLUS EXHIBIT 1015
Page 74 of 82

Annex D (informative): MBMS

D.1 MBMS control & functions

The E-UTRAN supporting MBMS comprises eNBs and co-ordinating functions.

The functions hosted by the eNB may be:

- Scheduling and transmission of MBMS control information;
- Scheduling of single-cell MBMS transmissions;
- Transmission of single-cell and multi-cell MBMS services;
- Radio bearer control for MBMS.

The co-ordinating functions may include:

- Distribution of MBMS services;
- Co-ordination of multi-cell MBMS transmissions;
- MBMS SAE bearer control.

It is FFS which node in E-UTRAN performs the co-ordination functions.

D.2 MBMS transmission

A point-to-multipoint radio bearer is used to carry MBMS traffic. It is FFS whether a point-to-point radio bearer is also used to carry MBMS traffic or not. Improvements for single-cell MBMS transmission (e.g. HARQ) and MCS that would enable potential removal of p-t-p transmissions for MBMS are FFS.

A frequency layer can be dedicated to MBMS transmissions:

- When a cell belongs to a frequency layer dedicated to MBMS transmissions (MBMS-dedicated cell):
  - The MBMS transmission (MTCH and MCCH) occurs on MCH or DL-SCH (FFS);
  - No uplink or counting mechanism supported;
  - No support for unicast data transfer in the cell;
  - The occurrence of paging messages on the frequency layer dedicated to MBMS transmission is FFS:
    - If paging messages were allowed, the UE could answer in a non-E-UTRA cell e.g. UTRA cell (FFS);
  - The possible multi-cell p-t-m transmission with SFN operation on the MCH of the SFN area is semi-statically configured e.g. by O&M.
  - Single-cell p-t-m transmission is possible.
- When a cell does not belong to a frequency layer dedicated to MBMS transmissions (MBMS/Unicast-mixed cell):
  - Transmission of both unicast and MBMS transmissions in the cell is done in a co-ordinated manner on DL-SCH and or MCH+DL-SCH (FFS);
  - The possible SFN operation on the MCH of the SFN area is semi-statically configured e.g. by O&M; or the SFN area is dynamic and may be based on counting mechanisms (FFS).
  - Counting is possible (FFS);

ONEPLUS EXHIBIT 1015
Page 75 of 82

- P-t-p transmission on DL-SCH is FFS.

There are two types of MBMS transmissions in E-UTRA/E-UTRAN:

a) Single-cell transmission (no SFN operation):

- The MBMS service, e.g. message distribution, is transmitted only on the coverage of a specific cell;
- The MBMS service (MTCH and MCCH) may be transmitted on DL-SCH or MCH (FFS);
- Combining of MBMS transmission from multiple cells is not supported;
- Counting for switching between p-t-p and p-t-m radio bearer may be supported (FFS);
- The p-t-m/p-t-p switching points are either dynamically decided based on counting mechanism or semi-statically configured by O&M (FFS).

b) Multi-cell transmission (SFN operation):

- The MBMS service (MTCH and MCCH) is transmitted on MCH;
- Combining is supported with SFN;
- Synchronous transmission.

The BCCH indicates where the MCCH(s) are:

- One (or none) MCCH per cell for cell specific transmission;
- MCCH(s) sent in SFN area for non-cell specific transmission.

Having a feedback mechanism for MTCH transmission is FFS: statistical feedback, TTI based NACK or something else. Also is FFS if the re-transmission is a single cell transmission in all cases.

D.3 Deployment Scenarios

In terms of deployment scenarios of MBMS in E-UTRAN, the following alternatives can be listed:

- Carrier type: dedicated vs. mixed carrier;
- SFN transmission: multi-cell vs. single-cell transmission;
- Radio bearer type: p-t-m vs. p-t-p;
- Counting: yes or no;
- Audience measurement: yes or no;
- ON/OFF control of MBMS service delivery: yes or no;
- PTP / PTM radio bearer switching: yes or no;

Table D.3 below lists the combinations of the above alternatives that are supported in E-UTRAN:

Table D.3: MBMS Deployment Scenarios

#	Carrier	Transmission	RB	Counting	Comments
1	dedicated	multi-cell	p-t-m	no	From 1 to n cells Audience measurement (FFS)
2	mixed	multi-cell	p-t-m	no	Audience measurement (FFS)
…	…	…	…	…	…

Note: other deployment scenarios will be included once agreed.

ONEPLUS EXHIBIT 1015
Page 76 of 82

Annex E (informative): Drivers for Mobility Control

Table E.1 lists the drivers, limitations, and their applicability to intra-frequency, inter-frequency, and inter-RAT scenarios. Each driver and limitation is described in Section 2.1 and 2.2, respectively.

Table E.1: Drivers and limitations for mobility control and applicability to mobility scenarios.

	#	Drivers/limitations	Intra-frequency	Inter-frequency	Inter-RAT
Drivers	1	Best radio condition	X	X	X
	2	Camp load balancing		X	X
	3	Traffic load balancing		X	X
	4	UE capability		X	X
	5	Hierarchical cell structures		X	X
	6	Network sharing		X	X
	7	Private neworks/home cells		X	X
	8	Subscription based mobility control		X	X
	9	Service based mobility control		X	X
	10	MBMS		X	X
Limitations	11	UE battery saving	X	X	X
	12	Network signalling/processing load	X	X	X
	13	U-plane interruption and data loss	X	X	X
	14	OAM complexity	X	X	X

As shown in Table E.1, the applicable drivers depend on the mobility scenario, i.e., intra-frequency, inter-frequency, and inter-RAT:

- **Intra-frequency mobility**: intra-frequency mobility is the most fundamental, indispensable, and frequent scenario. With the frequency reuse being one in E-UTRAN, applying any driver other than the "best radio condition" to intra-frequency mobility control incur increased interference and hence degraded performance. As such, only the "best radio condition" driver is applicable to intra-frequency mobility. Note that the exact definition of "intra-frequency mobility" is yet unclear, and shall be clarified with RAN1.

- **Inter-frequency mobility**: as in UTRAN, an operator may have multiple carriers/bands for E-UTRAN working in parallel. The use of these frequency layers may be diverse. For example, some of these frequency layers may utilise the same eNB sites and antenna locations (i.e., co-located configuration), whereas some may be used to form a hierarchical cell structure (HCS), or even be used for private networks. Some frequency layers may provide MBMS services, while some may not. Moreover, E-UTRAN carriers/bands may be extended in the future to increase capacity. For example, as E-UTRAN gains popularity, an operator may decide to convert existing UTRAN carriers into E-UTRAN ones. The operator may also acquire additional carriers/bands, that are not necessarily contiguous. As a consequence, different UE band capabilities may coexist and different carriers/bands may operate at different areas within a network. The E-UTRAN standard should readily support such carrier/band extensions and diverse network configurations, providing flexibility and efficiency. Therefore, a number of drivers apply to inter-frequency mobility control, in addition to the "best radio condition" driver.

- **Inter-RAT mobility**: the aspects that need to be considered for inter-RAT are similar to those for inter-frequency. For mobility solutions to be complete with the inter-RAT drivers, relevant updates would be necessary on the legacy (UTRAN/GERAN) specifications. This will add to the limitations, which are evidently more effective in inter-RAT. Although the drivers/limitations need to be assessed per objective RAT (UTRAN/GERAN), the solutions should be made common as much as possible to reduce any complexity.

E.1 Drivers

The drivers for mobility control are described in the following sections.

ONEPLUS EXHIBIT 1015
Page 77 of 82

E.1.1 Best radio condition

The primary purpose of cell reselection, regardless of intra-frequency, inter-frequency, or inter-RAT, is to ensure that the UE camps on/connects to the best cell in terms of radio condition, e.g., path loss, received reference symbol power, or received reference symbol Es/I0. The UE should support measurements to suffice this aspect. For E-UTRAN cells, the frequency domain scheduling and channel/symbol mapping may have some implications to designing the measurements and reselection/reporting criteria. The UE would also have to check that the selected cell falls within the accesible range (in terms of signal strength and possibly also in terms of propagation delay, i.e., check if it falls within the dynamic range of timing advance, FFS).

E-UTRAN should support good mobility even when the radio environment changes suddenly, e.g., when the UE enters a tunnel or in a Manhattan-like street cell scenario. It should be discussed whether a special mechanism is needed to cope with such sudden changes in radio environment or it can be handled with good radio network planning practices. In either case, the system design should minimise any side effects of counteracting the sudden changes in the radio environment (e.g., ping-pongs).

For inter-frequency/RAT mobility, the UE needs idle gaps to perform measurements on other frequency layers/RATs. In addition, for inter-RAT, E-UTRAN measurements while the UE is in another RAT (UTRAN/GERAN) need to be supported. It should be discussed whether in certain cases (e.g., co-located E-UTRAN cells within the same frequency band) the measurements can be omitted.

E.1.2 Camp load balancing

This is to distribute idle state UEs among the available bands/carriers/RATs, such that upon activation, the traffic loading of the bands/carriers/RATs would be balanced. At least the path loss difference between different bands should be compensated to avoid UEs concentrating to a certain frequency layer (e.g., lower frequency bands due to the propagation nature). A deliberate mechanism would be necessary to avoid UEs concentrating to a certain RAT (e.g., E-UTRAN). Various solutions have been presented including the use of Qoffset and an approach of limiting the frequency layers for camping.

For inter-RAT, this driver also includes the aspect of balancing the loading of core network nodes of different RATs. Nevertheless, for intra- E-UTRAN, the core network load aspect is out of scope, since MME/SAE Gateway relocation by itself should not cause any radio mobility procedure (but only NAS procedures like NAS ID and security updates).

E.1.3 Traffic load balancing

This is to balance the loading of active state UEs, using redirection for example. In E-UTRAN, traffic load balancing is essential because of the shared channel nature. That is, the user throughput decreases as the number of active UEs in the cell increases, and the loading directly impacts on the user perception. A solution is desired that causes minimum impact on the user perception. This implies that inter-layer transitions are preferably done during data inactivity (e.g., DRX) or transition to the idle state. Although this driver is also applicable to inter-RAT, for inter-RAT, the “service dependent control” driver may be more dominant than the load balancing aspect.

E.1.4 UE capability

As E-UTRAN bands/carriers may be extended in the future, UEs having different band capabilities may coexist within a network. It is also likely that roaming UEs have different band capabilities. Overlaying different RATs adds to this variety. The mobility solution should cope with the coexistence of various UE capabilities in an efficient manner.

E.1.5 Hierarchical cell structures

As in UTRAN, hierarchical cell structures (HCS) may be utilised in E-UTRAN to cover for example, indoors and hot spots efficiently. It is possible that E-UTRAN is initially deployed only at hot spots, in which case this driver becomes essential for inter-RAT, not just for inter-frequency. Another use case would be to deploy a large umbrella cell to cover a vast area without having to deploy a number of regular cells, while providing capacity by the regular cells on another frequency. While HCS can be seen as a solution to reduce measurement and signalling loads, to optimise HCS usage, mobility control should take into account the UE mobility (e.g., speed). This however implies that sufficient mobility detection is also required. Although HCS is not addressed as a mobility driver for intra-frequency mobility, intra-frequency HCS deployment should not be restricted.

ONEPLUS EXHIBIT 1015
Page 78 of 82

E.1.6 Network sharing

At the edge of a shared portion of a network, it will be necessary to direct UEs belonging to different PLMNs to different target cells. The mobility solutions in both idle and active states should therefore support differentiation between UEs of different operators.

E.1.7 Private networks/home cells

Cells that are part of a sub-network should prioritise the camping on that sub-network. UEs that do not belong to private sub-networks should not attempt to camp or access them. Although this could be resolved by the use of forbidden TAs as in UTRAN, a more deliberate mechanism may be needed as some of these sub-networks could be very small, e.g., one home.

E.1.8 Subscription based mobility control

This mobility driver aims to limit the inter-RAT mobility for certain UEs, e.g., based on subscription or other operator policies. The system should provide means to dissallow access on certain RATs (including E-UTRAN) as done with "LA reject" in legacy systems. It should be possible for the operator to trigger a subsequent UE action such as a cell or PLMN selection.

E.1.9 Service based mobility control

An operator may have different policies in allocating frequencies to certain services. For example, the operator may concentrate VoIP UEs to a certain frequency layer or RAT (e.g., UTRAN or GERAN), if evaluations prove this effective. UEs requiring higher data rates may better be served on a frequency layer or RAT (e.g., E-UTRAN) having a larger bandwidth. The operator may also want to accommodate premium services on a certain frequency layer or RAT, that has better coverage or larger bandwidth.

This driver is essential for inter-RAT, due to the different QoS levels provided by different RATs. The nature of the service being requested (e.g., QoS and traffic behaviour) should be considered in controlling mobility, so that services are accommodated in the best suitable RAT. Note that such service dependent control shall only be based on network decisions and not on UE decisions (i.e., no UE based service dependent cell reselection), except for MBMS scenarios.

E.1.10 MBMS

As MBMS services may be provided only in certain frequency layers, it may be beneficial/necessary to control inter-frequency/RAT mobility depending on whether the UE receives a particular MBMS service or not. For MBMS scenarios only, UE based service dependent cell reselection might be considered acceptable. This aspect also depends on the UE capability for simultaneous reception of MBMS and unicast.

E.2 Limitations for mobility control

While the issues mentioned above drive E-UTRAN towards “aggressive” mobility control, the limiting factors also have to be considered. The factors listed below apply to all intra-frequency, inter-frequency, and inter-RAT mobility scenarios.

E.2.1 UE battery saving

The mobility solution should not consume excessive UE battery, e.g., due to measurements, measurement reporting, BCH reception, or TA update signalling. This could be achieved for example by setting appropriate measurement rules such as S-criteria, hysteresis, and time-to-trigger. Adaptive control of some measurement/mobility parameters (e.g., based on DRX, cell size, or mobility) may also be considered as a countermeasure. To reduce TA update signalling, TA allocations can be differentiated depending on the UE speed or the mobility vector, on top of appropriate TA planning. Effects on additional delays (e.g., paging) should also be investigated if means such as “long DRX” are used to achieve these savings.

It should be investigated together with RAN4 if a coupling between measurements accuracy and DRX (as in UTRAN) is also acceptable for E-UTRAN.

ONEPLUS EXHIBIT 1015
Page 79 of 82

E.2.2 Network signalling/processing load

The mobility solution should not cause excessive network signalling/processing load. This includes over-the-air signalling, S1/X2 signalling, and processing load at network nodes. Unnecessary handovers and cell reselections should be avoided, and PCH and BCH signallings, as well as dedicated signallings, should be limited. This could be achieved by similar countermeasures as for UE battery saving.

E.2.3 U-plane interruption and data loss

U-plane interruption and data loss caused by the mobility solution should be limited. The required QoS should be satisfied in any case.

E.2.4 OAM complexity

The mobility solution should not demand excessive efforts in operating/maintaining a network. For example, when a new eNB is added or an existing eNB fails, the mobility solution should not incur excessive efforts to set up or modify the parameters. Means should be studied to integrate the mobility solutions in the concept of "self-optimisation" to minimise manual processes. Reducing the neighbour list information in E-UTRAN would also be a countermeasure to this requirement.

ONEPLUS EXHIBIT 1015
Page 80 of 82

Annex F (informative): Change history

Change history (before approval)							
Date	**TSG #**	**TSG Doc.**	**CR**	**Rev**	**Subject/Comment**	**Old**	**New**
2006-06	RAN2 Ad.	R2-062020			First version.		0.0.0
2006-06	RAN2 Ad.	R2-062026			RLC operation clarified; High priority and low priority SRBs listed in RRC; New section on RRC procedures; Organisation of paging groups explained; New section on Support for self-configuration and self-optimisation.	0.0.0	0.0.1
2006-06	RAN2 Ad.	R2-062036			Four possible types of allocation added to section 11; New section for the support for real time IMS services.	0.0.1	0.0.2
2006-08	RAN2#54	R2-062206			Annex B on RRC and MAC control added. Minor editorial clarifications.	0.0.2	0.0.3
2006-09	RAN#34	RP-060603			Section 4 on “Overall Architecture” reorganised; Details on RLC operation included (segmentation, PDU size); Overview of System Information and RACH procedure added.	0.0.3	0.0.4
2006-10	RAN2#55	R2-063012			Ciphering for RRC signalling required in eNB as agreed in SA3; Agreements on RLC operation included: concatenation, discard, polling and status reports; Agreed text proposal in R3-061428 on Self Configuration added to section 19; Context transfer of header compression at UPE relocation listed as FFS. Outline of the RACH procedure described.	0.0.4	0.0.5
2006-10	RAN2#55	R2-063039			Miscellaneous editorial corrections; Agreed text proposal R3-061606 on Current status of E-UTRAN Architecture description added to section 4; Agreed text proposal in R3-061613 on Support for self-configuration and self-optimisation added to section 19. Agreed Physical layer model R2-063031 added to section 5	0.0.5	0.1.0
2006-11	RAN2#56	R2-063656			Annex C on system information classification added (R2-063064); Integrity protection for the control plane only (SA3 agreement); Agreements on PDCP and RLC PDU structure/handling reflected; Decisions on mobility aspects such as load balancing, handover, radio link failure and random access procedure added; Agreed MBMS deployment scenarios listed together with MBMS transmissions and principles from 25.813; Agreed text proposal R3-061936 on Radio Resource Management added to section 15; Agreed text proposal R3-061940 on RAN Sharing added to section 10; Agreed text proposal R3-061943 on Roaming/Area Restrictions in SAE/LTE added to section 10; Agreed text proposal R3-062008 on S1 C-Plane Functions and procedures added to section 18; Agreed text proposal R3-062011 on X2 interface added to section 19.	0.1.0	0.2.0
2006-11	RAN2#56	R2-063680			Incorporation of RAN1 agreement regarding the mandatory support of 20Mhz DL bandwidth for UEs i.e. removal of sub-clause 16.1; Editorial corrections.	0.2.0	0.3.0
2006-11	RAN2#56	R2-063681			Removal of the SA3 agreement on integrity protection for the user plane; Addition of Annex D on MBMS Transmission; Editorial corrections.	0.3.0	0.3.1
2006-11	RAN#34	RP-060806			Clean version	0.3.1	0.3.1
2007-01	RAN2#56 bis	R2-070403			SA3 agreement on integrity protection for the user plane included (R2-070016); Annex E on drivers for mobility control added (R2-070276); Agreements on the details of the random access procedure added in section 10.1.5 (R2-070365); New section on UL rate control included (R2-070410); RRC security principles listed in section 13.1 (R2-070044); Agreement on MAC security added to section 13 (R2-062100); Basis for DL scheduling put in section 11.1; Assumptions on neighbour cell list included in section 10.	0.3.1	0.4.0
2007-02	RAN2#57	R2-070451			Number of bits for RACH in TDD clarified; Miscellaneous editorial corrections.	0.4.0	0.5.0
2007-02	RAN2#57	R2-071073			Architecture updated according to R3-070397; Agreements from R2-070802.	0.5.0	0.6.0

ONEPLUS EXHIBIT 1015
Page 81 of 82

2007-02	RAN2#57	R2-071120			RACH model for initial access described; Mapping of the BCCH and System Information principles added; Agreements on DRX included in section 12.	0.6.0	0.7.0
2007-02	RAN2#57	R2-071122			Miscellaneous clarifications	0.7.0	0.7.1
2007-02	RAN2#57	R2-071123			CCCH in DL listed as FFS; SAE Gateway ID removed from section 8.2; PDCP for the control plane listed as FFS in section 4.3.2; Agreements on intra-E-UTRAN handover procedure included in section 10.1.2 (R3-062020).	0.7.1	0.8.0
2007-03	RAN2#57	R2-071124			Agreement on Radio Access Network Sharing (R2-070551) added to section 10.1.7; Overview of the physical layer (R1-071251) included to section 5; Agreed text proposals on *S1 interface* included in Section 19 (R3-070289, R3-070402); Agreed text proposal R3-070409 on *network sharing* included in section 10.1.7; Agreed text proposal R3-070411 on *Area Restrictions* included in section 10.4; Agreed text proposal R3-070448 on *Assembly of Intra-E-UTRAN handover command* included in section 10.1.2.1.1; Agreed text proposal R3-070451 on *inter RAT HO principles* included in section 10.2.2; Agreed text proposal R3-070472 on *Addressing on S1-C and X2-C* added to sections 19.2 and 20.2; Agreed text proposal R3-070494 on *Initial Context Setup Function and Procedure* added to section 19; Agreed text proposal R3-070495 on *S1 Paging function and procedure* added to section 19 Figures for mapping between channels split into Uplink and Downlink parts in section 5.3.1 and 6.1.3.	0.8.0	0.9.0
2007-03	RAN#35	RP-070136			S1-U and S1-MME used throughout the document; aGW replaced by EPC when still used; Clean version for information	0.9.0	1.0.0

Change history (after approval)							
Date	**TSG #**	**TSG Doc.**	**CR**	**Rev**	**Subject/Comment**	**Old**	**New**
2007-03	RP-35	RP-070136	-		Approved at TSG-RAN #35 and placed under Change Control	1.0.0	8.0.0

ONEPLUS EXHIBIT 1015
Page 82 of 82