RE: GenghisComm's patent portfolio
주영재 <youngjae.joo@samsung.com>
Fri 7/1/2022 2:58 AM
To:

- Alison Richards <arichards@giplg.com>

Cc:

- 안철우 <cw.ahn@samsung.com>;
- 정우찬 <wc.chung@samsung.com>;
- Kristina Martin <kmartin@giplg.com>;
- Irwin Park <ipark@giplg.com>

Dear Alison,

Hello. I'm youngjae who is in charge of this matter and writing to confirm that Samsung has received your new claim charts. After initial review for those, I would get back to you to discuss how to proceed this matter. Thank you.

Best regards,

Youngjae

--------- **Original Message** ---------

Sender : Alison Richards <arichards@giplg.com>

Date : 2022-07-01 02:13 (GMT+9)

Title : GenghisComm's patent portfolio

Hello Samung team:

Attached is an additional notice letter about Samsung's infringement of GenghisComm's patent portfolio.

Best,

Alison Aubry Richards

GLOBAL IP LAW GROUP, LLC

55 West Monroe Street

Suite 3400

Chicago, Illinois 60603

arichards@giplg.com

Direct: 312.241.1505

Cell: 773.987.1172

GLOBAL IP LAW GROUP, LLC
55 W MONROE STREET
SUITE 3400
CHICAGO, IL 60603

312.241.1500

GIPLG.COM

Alison Richards
arichards@giplg.com
312.241.1505 (Direct)

June 29, 2022

VIA EMAIL and PRIORITY MAIL

WooChan Chung
Youngjae Ju
Kevin Kwon
Licensing Team, IP Center
Samsung Electronics Co., Ltd.
33 Seongchon-gil, Seocho-gu
Seoul 06765, Republic of Korea
kyjp@samsung.com
wc.chung@samsung.com
youngjae.joo@samsung.com

Mr. In Sung Park
Senior Manager, IP Business Development
Samsung Electronics
416, Maetan 3-Dong, Yeongtong-Gu,
Suwon-si, Gyeonggi-Do, South Korea, 443-743
inspark@samsung.com

Mr. Jamal Haughton
General Counsel
Samsung Electronics America
105 Challenger Rd
Ridgefield Park NJ 7660
j.haughton@samsung.com

Re: *GenghisComm Holdings Patent Portfolio*

Dear Sirs:

This letter is a follow-up to GenghisComm's November 19, 2020 regarding the GenghisComm patent portfolio. Please find enclosed additional claim charts which provide further notice of Samsung's use of GenghisComm's patented technology. The new infringement charts include:

1. U.S. Patent 11,075,786 - Multicarrier sub-layer for direct sequence channel and multiple-access coding

2. U.S. Patent 11,223,508 - Wireless Communications Using Flexible Channel Bandwidth

We continue to offer Samsung a license to this patent portfolio.

Very truly yours,

Enclosures

Notice

This letter shall not be construed to grant any express or implied license, authorization, covenant-not-to-sue, immunity, forbearance, indulgence, waiver, release or any other right with respect to these patents or otherwise. The owners reserve all rights with regard to its patents, including but not limited to: (1) the right to seek injunctive or other relief, including royalties or other damages going back at least as far as the last six years; (2) the right to change any royalty rates at any time; and (3) the right to change or withdraw any licensing offer at any time without notice. You should not rely on any communication, lack of communication, and/or any inactivity from Global IP Law Group or these owners as a relinquishment, acquiescence, waiver, or compromise of any of these owners' rights or as a change or withdrawal of any prior assertions stated. This letter and any subsequent related discussions do not create any obligation by the owners to proceed with any license or other contract with you. These owners reserve the right, in its sole discretion, to abandon or withdraw from at any time for any reason any discussions contemplated by this letter.

GLOBAL IP LAW GROUP

U.S. Patent No. 11,075,786: Samsung LTE Devices[1]

Claim 10	Analysis	Select Evidence
An apparatus for communication in a wireless communication network	The Samsung Galaxy S22 Ultra ("Galaxy") is a non-limiting example of an apparatus for communication in a wireless communication network (e.g., LTE network). As shown to the right, the Galaxy is an LTE device, and adheres to the LTE specification.	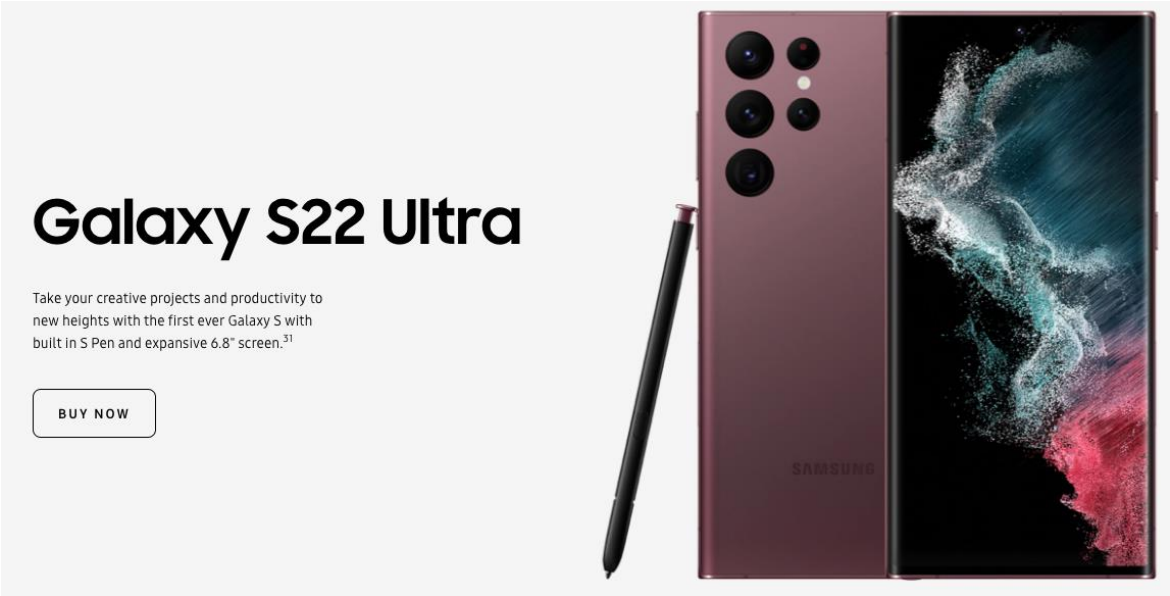 Source: https://www.samsung.com/us/smartphones/galaxy-s22-ultra/highlights/ LTE Enhanced 4x4 MIMO, Up to 7CA, LTE Cat.20 Up to 2.0Gbps Download / Up to 200Mbps Upload Source: https://www.samsung.com/global/galaxy/galaxy-s22-ultra/specs/

[1] This chart applies to all Samsung devices that include LTE compatibility.

Samsung v. GenghisComm
IPR2025-00789, 11,075,768
GC EX2001

Claim 10	Analysis	Select Evidence
	As shown to the right, the LTE physical channel uplink (from user device to base station) "is based on OFDMA (Orthogonal Frequency Division Multiple Access)," such that all Galaxy devices must use OFDMA for their physical channel uplink communications.	To reach higher data rates in UMTS (Universal Mobile Terrestrial System) a new access technology WCDMA (Wideband Code Division Multiple Access) was developed. The access network in UMTS emulates a circuit switched connection for real time services and a packet switched connection for datacom services (black in figure 1). In UMTS the IP address is allocated to the UE when a datacom service is established and released when the service is released. Incoming datacom services are therefore still relying upon the circuit switched core for paging. The Evolved Packet System (EPS) is purely IP based. Both real time services and datacom services will be carried by the IP protocol. The IP address is allocated when the mobile is switched on and released when switched off. The new access solution, LTE, is based on OFDMA (Orthogonal Frequency Division Multiple Access) and in combination with higher order modulation (up to 64QAM), large bandwidths (up to 20 MHz) and spatial multiplexing in the downlink (up to 4x4) high data rates can be achieved. The highest theoretical peak data rate on the transport channel is 75 Mbpsin the uplink, and in the downlink, using spatial multiplexing, the rate can be as high as 300 Mbps. The LTE access network is simply a network of base stations, evolved NodeB (eNB), generating a flat architecture (figure 2). There is no centralized intelligent controller, and the eNBs are normally inter-connected viathe X2-interface and towards the core network by the S1-interface (figure 2). The reason for distributing the intelligence amongst the base-stations in LTE is to speed up the connection set-up and reduce the time required for a handover. For an end-user the connection set-up time for a real time data session is in many cases crucial, especially in on-line gaming. The time for a handover is essential for real-time services where end-users tend to end calls if the handover takes too long. Source: https://www.3gpp.org/technologies/keywords-acronyms/98-lte 5.1.1 Physical channels An uplink physical channel corresponds to a set of resource elements carrying information originating from higher layers and is the interface defined between 3GPP TS 36.212 [3] and the present document 3GPP TS 36.211. The following uplink physical channels are defined: - Physical Uplink Shared Channel, PUSCH - Physical Uplink Control Channel, PUCCH - Short Physical Uplink Control Channel, SPUCCH - Physical Random Access Channel, PRACH 5.1.2 Physical signals An uplink physical signal is used by the physical layer but does not carry information originating from higher layers. The following uplink physical signals are defined: - Reference signal Source: https://www.etsi.org/deliver/etsi_TS/136200_136299/136211/15.02.00_60/ts_136211v150200p.pdf

Claim 10	Analysis	Select Evidence
	As shown to the right, the LTE specification requires that, in the uplink, data must be transform precoded and then mapped onto subcarriers to generate the SC-FDMA (single channel frequency division multiple access) signal for transmission.	**5.3 Physical uplink shared channel** The baseband signal representing the physical uplink shared channel is defined in terms of the following steps: - scrambling - modulation of scrambled bits to generate complex-valued symbols - mapping of the complex-valued modulation symbols onto one or several transmission layers - transform precoding to generate complex-valued symbols - precoding of the complex-valued symbols - mapping of precoded complex-valued symbols to resource elements - generation of complex-valued time-domain SC-FDMA signal for each antenna port 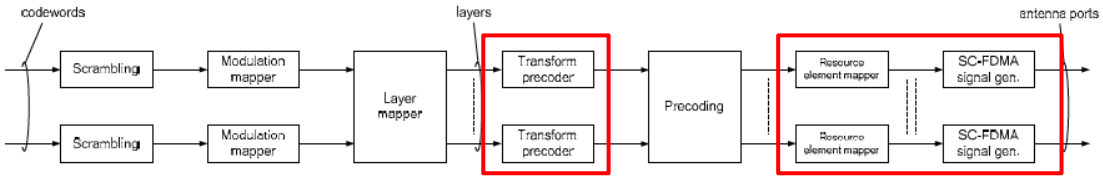 **Figure 5.3-1: Overview of uplink physical channel processing** Source: https://www.etsi.org/deliver/etsi_TS/136200_136299/136211/15.02.00_60/ts_136211v150200p.pdf

Claim 10	Analysis	Select Evidence
that employs a first set of complex-valued codes to encode data symbols to be transmitted,	Galaxy devices employ a first set of complex-valued codes (e.g., the exponential function in the transform precoding formula at right) for encoding data symbols for transmission. As shown to the right, a block of data symbols "$x^{(\lambda)}$…" is transformed using a DFT to generate "$y^{(\lambda)}$…" complex-valued data symbols.	5.3.3 Transform precoding For each layer $\lambda = 0,1,\ldots,\upsilon-1$ the block of complex-valued symbols $x^{(\lambda)}(0),\ldots,x^{(\lambda)}(M_{\text{symb}}^{\text{layer}}-1)$ is divided into $M_{\text{symb}}^{\text{layer}} / M_{\text{sc}}^{\text{PUSCH}}$ sets, each corresponding to one SC-FDMA symbol. Transform precoding shall be applied according to $$y^{(\lambda)}(l \cdot M_{\text{sc}}^{\text{PUSCH}} + k) = \frac{1}{\sqrt{M_{\text{sc}}^{\text{PUSCH}}}} \sum_{i=0}^{M_{\text{sc}}^{\text{PUSCH}}-1} x^{(\lambda)}(l \cdot M_{\text{sc}}^{\text{PUSCH}} + i) e^{-j\frac{2\pi ik}{M_{\text{sc}}^{\text{PUSCH}}}}$$ $$k = 0,\ldots,M_{\text{sc}}^{\text{PUSCH}}-1$$ $$l = 0,\ldots,M_{\text{symb}}^{\text{layer}} / M_{\text{sc}}^{\text{PUSCH}}-1$$ resulting in a block of complex-valued symbols $y^{(\lambda)}(0),\ldots,y^{(\lambda)}(M_{\text{symb}}^{\text{layer}}-1)$. The variable $M_{\text{sc}}^{\text{PUSCH}} = M_{\text{RB}}^{\text{PUSCH}} \cdot N_{\text{sc}}^{\text{RB}}$, where $M_{\text{RB}}^{\text{PUSCH}}$ represents the bandwidth of the PUSCH in terms of resource blocks, and shall fulfil $$M_{\text{RB}}^{\text{PUSCH}} = 2^{\alpha_2} \cdot 3^{\alpha_3} \cdot 5^{\alpha_5} \le N_{\text{RB}}^{\text{UL}}$$ where $\alpha_2, \alpha_3, \alpha_5$ is a set of non-negative integers. Source: https://www.etsi.org/deliver/etsi_TS/136200_136299/136211/15.02.00_60/ts_136211v150200p.pdf

Claim 10	Analysis	Select Evidence
and employs a second set of complex-valued codes to recover transmitted data symbols from a received signal, the apparatus comprising:	In operation, the Galaxy device sends data to a base station/eNode B ("Base Station"). The Base Station recovers the sent data by using a second set of complex valued codes which are the inverse of the first set of complex-valued codes. Shown to the right is a schematic overview of signal processing of the physical channel, with the top portion corresponding to the physical channel uplink signal processing through transmission. The bottom portion represents the Base Station processing of the uplink signal. The M-point DFT corresponds to the transform precoding DFT defined in the LTE specification. As shown, the Base Station processes the transform precoded signals by using an M-Point Inverse DFT, which is the inverse of the M-point DFT.	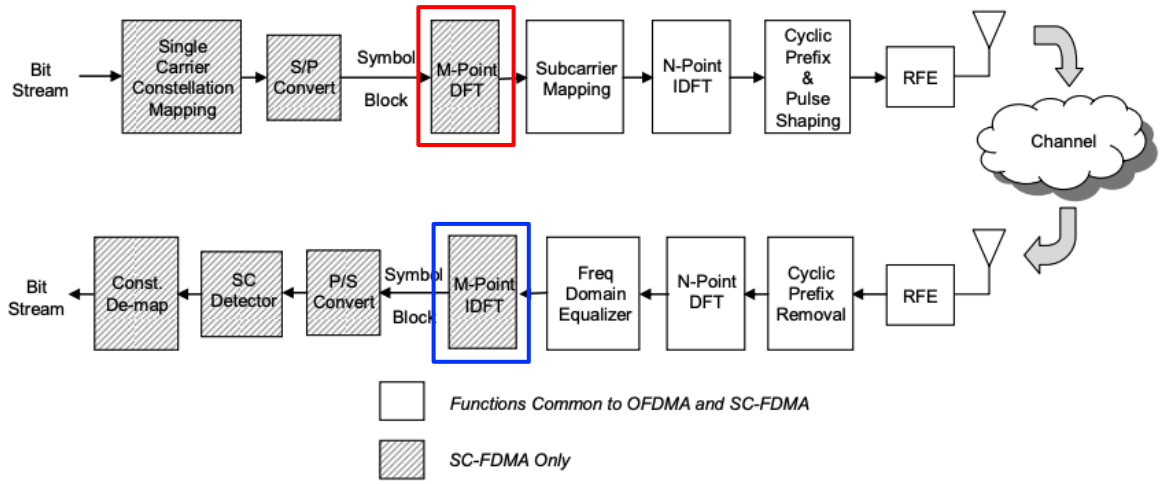 Source: https://www.nxp.com/docs/en/white-paper/3GPPEVOLUTIONWP.pdf

Claim 10	Analysis	Select Evidence
at least one processor; and	Galaxy devices have at least one processor (e.g., 64-bit Octa-Core processor).	4nm 64-bit Octa-Core Processor * 2.80GHz (Maximum Clock Speed) + 2.5GHz + 1.8GHz 4nm 64-bit Octa-Core Processor * 2.99GHz (Maximum Clock Speed) + 2.4GHz + 1.7GHz * * * * 12GB RAM (LPDDR5) with 1TB internal storage 12GB RAM (LPDDR5) with 512GB internal storage 12GB RAM (LPDDR5) with 256GB internal storage 8GB RAM (LPDDR5) with 128GB internal storage Source: https://www.samsung.com/global/galaxy/galaxy-s22-ultra/specs/
a non-transitory computer-readable memory communicatively coupled to the at least one processor, the non-transitory computer-readable memory including a set of instructions stored thereon and executable by the at least one processor for:	These processors, as a non-limiting example, include non-transitory memory (e.g., LPDDR5) that includes processing instructions.	

Claim 10	Analysis	Select Evidence
selecting a plurality of subcarriers to be transmitted;	As shown to the right, Galaxy devices select subcarriers for transmission, with the subcarriers selected from those assigned to the device. Each physical resource block (PRB) consists of 12 subcarriers, and determines the number of inputs for SC-FDMA signal generation.	5.3.4 Mapping to physical resources For each antenna port p used for transmission of the PUSCH in a subframe the block of complex-valued symbols $z^{(\tilde{p})}(0),\ldots,z^{(\tilde{p})}(M^{\text{ap}}_{\text{symb}}-1)$ shall be multiplied with the amplitude scaling factor β_{PUSCH} in order to conform to the transmit power P_{PUSCH} specified in clause 5.1.1.1 in 3GPP TS 36.213 [4], and mapped in sequence starting with $z^{(\tilde{p})}(0)$ to physical resource blocks on antenna port p and assigned for transmission of PUSCH. The relation between the index $\tilde{p}$ and the antenna port number p is given by Table 5.2.1-1. The mapping to resource elements (k,l) corresponding to the physical resource blocks assigned for transmission shall fulfil the following criteria: Source: https://www.etsi.org/deliver/etsi_TS/136200_136299/136211/15.02.00_60/ts_136211v150200p.pdf ***PUSCH*** The Primary Uplink Shared Channel (PUSCH) is used by uplink users to transmit data to the base station. All subcarriers not allocated for PRACH, PUCCH, or SRS are available for assignment to users. PUSCH data is modulated using SC-FDMA. PUSCH data is transmitted using QPSK, 16QAM, or 64QAM as the single carrier modulation type before spreading (FFT, subcarrier mapping, then IFFT). Source: https://rfmw.em.keysight.com/wireless/helpfiles/89600b/webhelp/subsystems/lte/content/lte_overview.htm **3.2.2 Multiplexing** Uplink PRBs are assigned to UE by the base station scheduler via the downlink CCPCH. Uplink PRBs consist of a group of 12 contiguous subcarriers for a duration of one slot time. Source: https://www.nxp.com/docs/en/white-paper/3GPPEVOLUTIONWP.pdf

Claim 10	Analysis	Select Evidence
encoding the data symbols with the first set of complex-valued codes to produce encoded data symbols;	As shown to the right, Galaxy devices employ transform precoding, which employs complex-valued codes (e.g., exponential function *e*). The complex-valued codes encode the data symbols (e.g., $x^{(\lambda)}$ variable in the transform precoding equation) to produce encoded data symbols.	5.3.3 Transform precoding For each layer $\lambda = 0,1,\ldots,\upsilon-1$ the block of complex-valued symbols $x^{(\lambda)}(0),\ldots,x^{(\lambda)}(M_{\text{symb}}^{\text{layer}}-1)$ is divided into $M_{\text{symb}}^{\text{layer}} / M_{\text{sc}}^{\text{PUSCH}}$ sets, each corresponding to one SC-FDMA symbol. Transform precoding shall be applied according to $$y^{(\lambda)}(l \cdot M_{\text{sc}}^{\text{PUSCH}} + k) = \frac{1}{\sqrt{M_{\text{sc}}^{\text{PUSCH}}}} \sum_{i=0}^{M_{\text{sc}}^{\text{PUSCH}}-1} x^{(\lambda)}(l \cdot M_{\text{sc}}^{\text{PUSCH}} + i) e^{-j\frac{2\pi ik}{M_{\text{sc}}^{\text{PUSCH}}}}$$ $$k = 0,\ldots,M_{\text{sc}}^{\text{PUSCH}}-1$$ $$l = 0,\ldots,M_{\text{symb}}^{\text{layer}} / M_{\text{sc}}^{\text{PUSCH}}-1$$ resulting in a block of complex-valued symbols $y^{(\lambda)}(0),\ldots,y^{(\lambda)}(M_{\text{symb}}^{\text{layer}}-1)$. The variable $M_{\text{sc}}^{\text{PUSCH}} = M_{\text{RB}}^{\text{PUSCH}} \cdot N_{\text{sc}}^{\text{RB}}$, where $M_{\text{RB}}^{\text{PUSCH}}$ represents the bandwidth of the PUSCH in terms of resource blocks, and shall fulfil $$M_{\text{RB}}^{\text{PUSCH}} = 2^{\alpha_2} \cdot 3^{\alpha_3} \cdot 5^{\alpha_5} \le N_{\text{RB}}^{\text{UL}}$$ where $\alpha_2, \alpha_3, \alpha_5$ is a set of non-negative integers. Source: https://www.etsi.org/deliver/etsi_TS/136200_136299/136211/15.02.00_60/ts_136211v150200p.pdf

Claim 10	Analysis	Select Evidence
applying the encoded data symbols to the plurality of subcarriers to produce a spread-Orthogonal Frequency Division Multiplexing (OFDM) signal; and	The SC-FMDA symbols (encoded data symbols) are then mapped to subcarriers (physical resources). SC-FDMA employs a DFT to spread OFDM data into a form that resembles a single carrier.	5.6 SC-FDMA baseband signal generation This clause applies to all uplink physical signals and uplink physical channels except the physical random access channel and PUSCH using sub-PRB allocations for BL/CE UEs. The time-continuous signal $s_l^{(p)}(t)$ for antenna port p in SC-FDMA symbol l in an uplink slot is defined by $$s_l^{(p)}(t) = \sum_{k=-\lfloor N_{RB}^{UL} N_{sc}^{RB}/2 \rfloor}^{\lceil N_{RB}^{UL} N_{sc}^{RB}/2 \rceil - 1} a_{k^{(-)},l}^{(p)} \cdot e^{j2\pi(k+1/2)\Delta f(t - N_{CP,l} T_s)}$$ for $0 \le t < (N_{CP,l} + N) \times T_s$ where $k^{(-)} = k + \lfloor N_{RB}^{UL} N_{sc}^{RB}/2 \rfloor$, $N = 2048$, $\Delta f = 15\,\text{kHz}$ and $a_{k,l}^{(p)}$ is the content of resource element (k,l) on antenna port p. Source: https://www.etsi.org/deliver/etsi_TS/136200_136299/136211/15.02.00_60/ts_136211v150200p.pdf

Claim 10	Analysis	Select Evidence
transmitting the spread-OFDM signal;	As shown to the right, the SC-FDMA (spread OFDM signal) is used for uplink transmission from the user equipment (e.g., Galaxy devices) to base stations.	**5.3.4 Mapping to physical resources** For each antenna port p used for transmission of the PUSCH in a subframe the block of complex-valued symbols $z^{(\tilde{p})}(0),\ldots,z^{(\tilde{p})}(M^{\text{ap}}_{\text{symb}}-1)$ shall be multiplied with the amplitude scaling factor β_{PUSCH} in order to conform to the transmit power P_{PUSCH} specified in clause 5.1.1.1 in 3GPP TS 36.213 [4], and mapped in sequence starting with $z^{(\tilde{p})}(0)$ to physical resource blocks on antenna port p and assigned for transmission of PUSCH. The relation between the index $\tilde{p}$ and the antenna port number p is given by Table 5.2.1-1. The mapping to resource elements (k,l) corresponding to the physical resource blocks assigned for transmission shall fulfil the following criteria: * * * * **5.2 Slot structure and physical resources** **5.2.1 Resource grid** The transmitted signal in each slot is described by one or several resource grids of $N^{\text{UL}}_{\text{RB}}N^{\text{RB}}_{\text{sc}}$ subcarriers and $N^{\text{UL}}_{\text{symb}}$ SC-FDMA symbols. The resource grid is illustrated in Figure 5.2.1-1. The quantity $N^{\text{UL}}_{\text{RB}}$ depends on the uplink transmission bandwidth configured in the cell and shall fulfil $N^{\text{min,UL}}_{\text{RB}} \le N^{\text{UL}}_{\text{RB}} \le N^{\text{max,UL}}_{\text{RB}}$ where $N^{\text{min,UL}}_{\text{RB}}=6$ and $N^{\text{max,UL}}_{\text{RB}}=110$ are the smallest and largest uplink bandwidths, respectively, supported by the current version of this specification. The set of allowed values for $N^{\text{UL}}_{\text{RB}}$ is given by 3GPP TS 36.101 [7]. The number of SC-FDMA symbols in a slot depends on the cyclic prefix length configured by the higher layer parameter *UL-CyclicPrefixLength* and is given in Table 5.2.3-1. An antenna port is defined such that the channel over which a symbol on the antenna port is conveyed can be inferred from the channel over which another symbol on the same antenna port is conveyed. There is one resource grid per antenna port. The antenna ports used for transmission of a physical channel or signal depends on the number of antenna ports configured for the physical channel or signal as shown in Table 5.2.1-1. The index $\tilde{p}$ is used throughout clause 5 when a sequential numbering of the antenna ports is necessary. Source: https://www.etsi.org/deliver/etsi_TS/136200_136299/136211/15.02.00_60/ts_136211v150200p.pdf

Claim 10	Analysis	Select Evidence
wherein the first set of complex-valued codes are complex conjugates of the second set of complex-valued codes.	As discussed above, transform precoding uses complex-valued codes (e.g., *e* function) to generate signals that are ultimately transmitted from the user device to base station. As explained above, and as shown to the right, the base station uses the inverse of the DFT (the inverse of the complex-valued code) used during the transform precoding step to decode the signal. Because the DFT is a unitary matrix (with its complex conjugate being its inverse), the inverse DFT generates complex conjugates.	5.3.3 Transform precoding For each layer $\lambda = 0,1,\ldots,\upsilon-1$ the block of complex-valued symbols $x^{(\lambda)}(0),\ldots,x^{(\lambda)}(M_{\text{symb}}^{\text{layer}}-1)$ is divided into $M_{\text{symb}}^{\text{layer}} / M_{\text{sc}}^{\text{PUSCH}}$ sets, each corresponding to one SC-FDMA symbol. Transform precoding shall be applied according to $$y^{(\lambda)}(l \cdot M_{\text{sc}}^{\text{PUSCH}} + k) = \frac{1}{\sqrt{M_{\text{sc}}^{\text{PUSCH}}}} \sum_{i=0}^{M_{\text{sc}}^{\text{PUSCH}}-1} x^{(\lambda)}(l \cdot M_{\text{sc}}^{\text{PUSCH}} + i) e^{-j\frac{2\pi ik}{M_{\text{sc}}^{\text{PUSCH}}}}$$ $$k = 0,\ldots,M_{\text{sc}}^{\text{PUSCH}}-1$$ $$l = 0,\ldots,M_{\text{symb}}^{\text{layer}} / M_{\text{sc}}^{\text{PUSCH}}-1$$ Inverse of *e* function is a complex-conjugate of the DFT used to decode transmitted signals in the base station resulting in a block of complex-valued symbols $y^{(\lambda)}(0),\ldots,y^{(\lambda)}(M_{\text{symb}}^{\text{layer}}-1)$. The var where $M_{\text{RB}}^{\text{PUSCH}}$ represents the bandwidth of the PUSCH in terms of resource blocks $$M_{\text{RB}}^{\text{PUSCH}} = 2^{\alpha_2} \cdot 3^{\alpha_3} \cdot 5^{\alpha_5} \le N_{\text{RB}}^{\text{UL}}$$ where $\alpha_2, \alpha_3, \alpha_5$ is a set of non-negative integers. Source: https://www.etsi.org/deliver/etsi_TS/136200_136299/136211/15.02.00_60/ts_136211v150200p.pdf 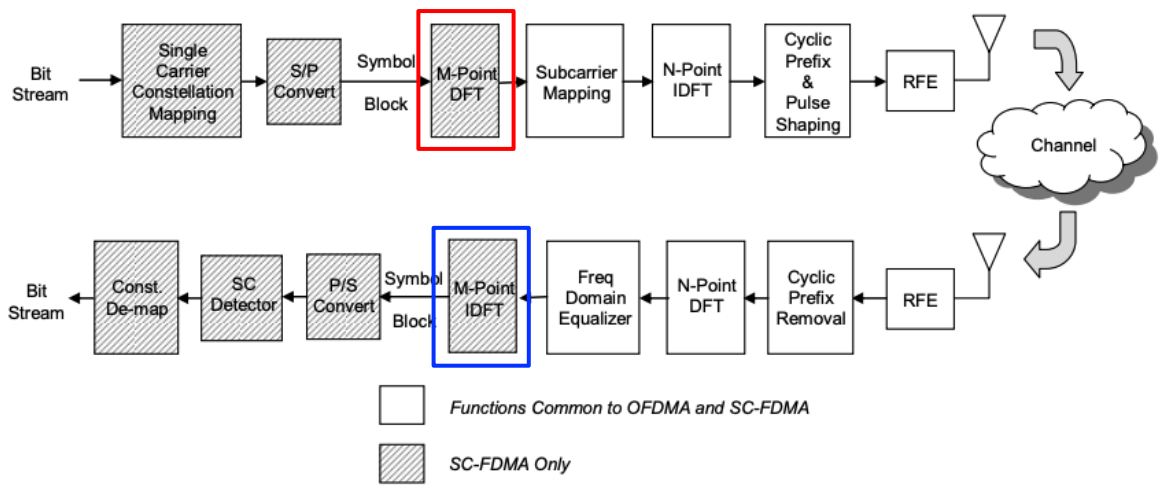 Source: https://www.nxp.com/docs/en/white-paper/3GPPEVOLUTIONWP.pdf

Claim 11	Analysis	Select Evidence
The apparatus of claim 10, wherein selecting is responsive to spectrum allocation or is configured to provide for orthogonal frequency division multiple access.	As discussed above and as shown to the right, the Galaxy device is assigned subcarriers (spectrum allocation) which are then selected for use.	5.3.4 Mapping to physical resources For each antenna port p used for transmission of the PUSCH in a subframe the block of complex-valued symbols $z^{(\tilde{p})}(0),\ldots,z^{(\tilde{p})}(M^{\text{ap}}_{\text{symb}}-1)$ shall be multiplied with the amplitude scaling factor β_{PUSCH} in order to conform to the transmit power P_{PUSCH} specified in clause 5.1.1.1 in 3GPP TS 36.213 [4], and mapped in sequence starting with $z^{(\tilde{p})}(0)$ to physical resource blocks on antenna port p and assigned for transmission of PUSCH. The relation between the index $\tilde{p}$ and the antenna port number p is given by Table 5.2.1-1. The mapping to resource elements (k,l) corresponding to the physical resource blocks assigned for transmission shall fulfil the following criteria: Source: https://www.etsi.org/deliver/etsi_TS/136200_136299/136211/15.02.00_60/ts_136211v150200p.pdf ***PUSCH*** The Primary Uplink Shared Channel (PUSCH) is used by uplink users to transmit data to the base station. All subcarriers not allocated for PRACH, PUCCH, or SRS are available for assignment to users. PUSCH data is modulated using SC-FDMA. PUSCH data is transmitted using QPSK, 16QAM, or 64QAM as the single carrier modulation type before spreading (FFT, subcarrier mapping, then IFFT). Source: https://rfmw.em.keysight.com/wireless/helpfiles/89600b/webhelp/subsystems/lte/content/lte_overview.htm **3.2.2 Multiplexing** Uplink PRBs are assigned to UE by the base station scheduler via the downlink CCPCH. Uplink PRBs consist of a group of 12 contiguous subcarriers for a duration of one slot time. Source: https://www.nxp.com/docs/en/white-paper/3GPPEVOLUTIONWP.pdf

Claim 15	Analysis	Select Evidence
The apparatus of claim 10, wherein the plurality of subcarriers are contiguous subcarriers or interleaved subcarriers.	As shown to the right, spread OFDM signals are comprised of subcarriers that can be mapped in either localized or distributed mode. In localized mode, the subcarriers are contiguous, while in distributed mode, the subcarriers are interleaved.	Unlike OFDM, the underlying SC-FDMA signal represented by the discrete subcarriers is—not surprisingly—single carrier. This is distinctly different than OFDM because the SC-FDMA subcarriers are not independently modulated. As a result, PAPR is lower than for OFDM transmissions. Analysis has shown that the LTE UE RFPA can be operated about 2 dB closer to the 1-dB compression point than would otherwise be possible if OFDM were employed on the uplink [2]. **2.5-2 SC-FDMA Subcarriers Can be Mapped in Either Localized or Distributed Mode** ***Localized Subcarriers*** ***Distributed Subcarriers*** As mentioned above, SC-FDMA subcarriers can be mapped in one of two ways: localized or distributed as shown in Figure 2.5-2. However, the current working assumption is that LTE will use localized subcarrier mapping. This decision was motivated by the fact that with localized mapping, it is possible to exploit frequency selective gain via channel-dependent scheduling (assigning uplink frequencies to UE based on favorable propagation conditions). Source: https://www.nxp.com/docs/en/white-paper/3GPPEVOLUTIONWP.pdf

Claim 16	Analysis	Select Evidence
The apparatus of claim 10, wherein encoding comprises multiplying a vector or matrix of data symbols with a vector or matrix comprising the first set of complex-valued codes.	The transform precoding step, as a non-limiting example, involves the use of a discrete Fourier transform. The DFT itself represent a vector multiplication. The DFT can also be represented as a complex matrix multiplication where data symbols (e.g., the *e* variable) are multiplied by the matrix of complex-valued codes (e.g., $x^{(\lambda)}$) variable values).	5.3.3 Transform precoding For each layer $\lambda = 0,1,\ldots,\upsilon-1$ the block of complex-valued symbols $x^{(\lambda)}(0),\ldots,x^{(\lambda)}(M_{\text{symb}}^{\text{layer}}-1)$ is divided into $M_{\text{symb}}^{\text{layer}} / M_{\text{sc}}^{\text{PUSCH}}$ sets, each corresponding to one SC-FDMA symbol. Transform precoding shall be applied according to $$y^{(\lambda)}(l \cdot M_{\text{sc}}^{\text{PUSCH}} + k) = \frac{1}{\sqrt{M_{\text{sc}}^{\text{PUSCH}}}} \sum_{i=0}^{M_{\text{sc}}^{\text{PUSCH}}-1} x^{(\lambda)}(l \cdot M_{\text{sc}}^{\text{PUSCH}} + i) e^{-j\frac{2\pi ik}{M_{\text{sc}}^{\text{PUSCH}}}}$$ $$k = 0,\ldots,M_{\text{sc}}^{\text{PUSCH}}-1$$ $$l = 0,\ldots,M_{\text{symb}}^{\text{layer}} / M_{\text{sc}}^{\text{PUSCH}}-1$$ resulting in a block of complex-valued symbols $y^{(\lambda)}(0),\ldots,y^{(\lambda)}(M_{\text{symb}}^{\text{layer}}-1)$. The variable $M_{\text{sc}}^{\text{PUSCH}} = M_{\text{RB}}^{\text{PUSCH}} \cdot N_{\text{sc}}^{\text{RB}}$, where $M_{\text{RB}}^{\text{PUSCH}}$ represents the bandwidth of the PUSCH in terms of resource blocks, and shall fulfil $$M_{\text{RB}}^{\text{PUSCH}} = 2^{\alpha_2} \cdot 3^{\alpha_3} \cdot 5^{\alpha_5} \le N_{\text{RB}}^{\text{UL}}$$ where $\alpha_2, \alpha_3, \alpha_5$ is a set of non-negative integers. Source: https://www.etsi.org/deliver/etsi_TS/136200_136299/136211/15.02.00_60/ts_136211v150200p.pdf

Claim 17	Analysis	Select Evidence
The apparatus of claim 10, wherein applying comprises modulating the encoded data symbols onto the plurality of subcarriers.	As shown to the right, Galaxy devices modulate complex-valued data onto subcarriers (physical resources).	5.8 Modulation and upconversion Modulation and upconversion to the carrier frequency of the complex-valued SC-FDMA baseband signal for each antenna port or the complex-valued PRACH baseband signal is shown in Figure 5.8-1. The filtering required prior to transmission is defined by the requirements in 3GPP TS 36.101 [7]. Source: https://www.etsi.org/deliver/etsi_TS/136200_136299/136211/15.02.00_60/ts_136211v150200p.pdf

GLOBAL IP LAW GROUP

Claim 18	Analysis	Select Evidence
The apparatus of claim 10, wherein the non-transitory computer-readable memory further includes instructions stored thereon and executable by the processor for adding a cyclic prefix to the spread-OFDM signal before transmitting the spread-OFDM signal.	As shown to the right, the memory in Galaxy devices includes instructions for adding a cyclic prefix to spread-OFDM signals prior to transmission.	

Table 4.2-1: Configuration of special subframe (lengths of DwPTS/GP/UpPTS)

Special subframe configuration	Normal cyclic prefix in downlink			Extended cyclic prefix in downlink		
	DwPTS	UpPTS		DwPTS	UpPTS	
		Normal cyclic prefix in uplink	Extended cyclic prefix in uplink		Normal cyclic prefix in uplink	Extended cyclic prefix in uplink
0	$6592 \cdot T_s$	$(1+X) \cdot 2192 \cdot T_s$	$(1+X) \cdot 2560 \cdot T_s$	$7680 \cdot T_s$	$(1+X) \cdot 2192 \cdot T_s$	$(1+X) \cdot 2560 \cdot T_s$
1	$19760 \cdot T_s$			$20480 \cdot T_s$		
2	$21952 \cdot T_s$			$23040 \cdot T_s$		
3	$24144 \cdot T_s$			$25600 \cdot T_s$		
4	$26336 \cdot T_s$			$7680 \cdot T_s$	$(2+X) \cdot 2192 \cdot T_s$	$(2+X) \cdot 2560 \cdot T_s$
5	$6592 \cdot T_s$	$(2+X) \cdot 2192 \cdot T_s$	$(2+X) \cdot 2560 \cdot T_s$	$20480 \cdot T_s$		
6	$19760 \cdot T_s$			$23040 \cdot T_s$		
7	$21952 \cdot T_s$			$12800 \cdot T_s$		
8	$24144 \cdot T_s$			-	-	-
9	$13168 \cdot T_s$			-	-	-
10	$13168 \cdot T_s$	$13152 \cdot T_s$	$12800 \cdot T_s$	-	-	-

* * * *

5.2.1 Resource grid

The transmitted signal in each slot is described by one or several resource grids of $N_{RB}^{UL} N_{sc}^{RB}$ subcarriers and N_{symb}^{UL} SC-FDMA symbols. The resource grid is illustrated in Figure 5.2.1-1. The quantity N_{RB}^{UL} depends on the uplink transmission bandwidth configured in the cell and shall fulfil

$$N_{RB}^{min,UL} \le N_{RB}^{UL} \le N_{RB}^{max,UL}$$

where $N_{RB}^{min,UL} = 6$ and $N_{RB}^{max,UL} = 110$ are the smallest and largest uplink bandwidths, respectively, supported by the current version of this specification. The set of allowed values for N_{RB}^{UL} is given by 3GPP TS 36.101 [7].

The number of SC-FDMA symbols in a slot depends on the cyclic prefix length configured by the higher layer parameter *UL-CyclicPrefixLength* and is given in Table 5.2.3-1.

* * * *

Table 5.2.3-1: Resource block parameters

Configuration	N_{sc}^{RB}	N_{symb}^{UL}
Normal cyclic prefix	12	7
Extended cyclic prefix	12	6

Source:
https://www.etsi.org/deliver/etsi_TS/136200_136299/136211/15.02.00_60/ts_136211v150200p.pdf

GLOBAL IP LAW GROUP

U.S. Patent No. 11,223,508: Samsung 5G Devices[1]

Claim 17	Analysis	Select Evidence
An apparatus for communicating in a mobile radio communications network, comprising:	The Samsung Galaxy S22 Ultra ("Samsung") is a non-limiting example of an apparatus for communication in a wireless communication network (e.g., 5G network). As shown to the right, the Samsung supports 5G communications, and adheres to the 5G specification.	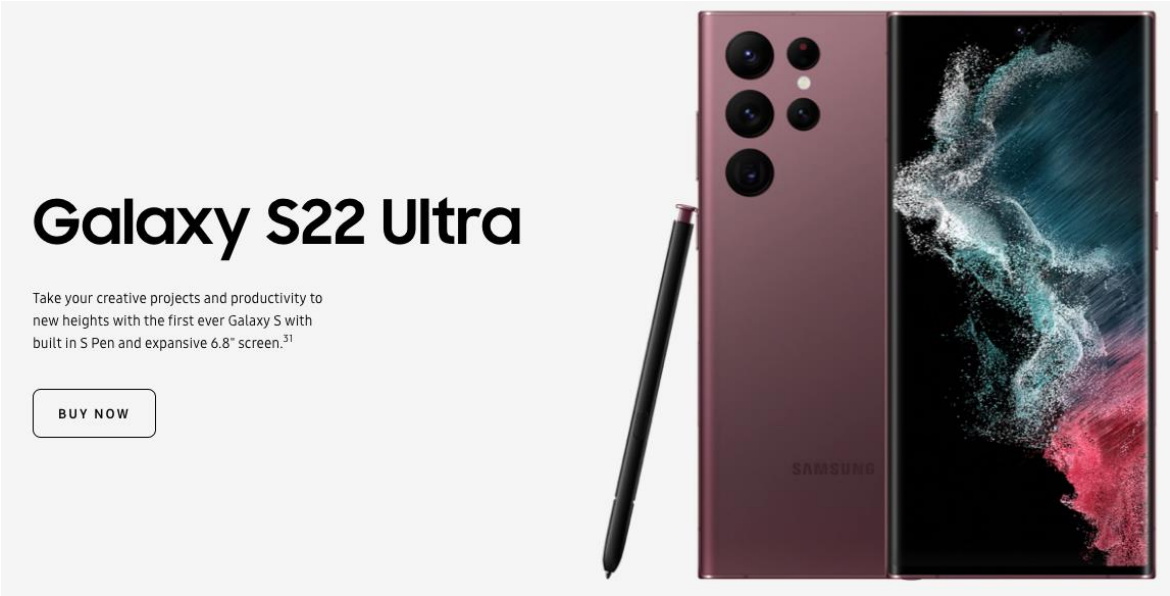 Source: https://www.samsung.com/us/smartphones/galaxy-s22-ultra/highlights/ Network & Connectivity 5G 5G Non-Standalone (NSA), Standalone (SA), Sub6 / mmWave Source: https://www.samsung.com/global/galaxy/galaxy-s22-ultra/specs/

[1] This chart applies to all Samsung devices that include 5G compatibility.

Samsung v. GenghisComm
IPR2025-00789, 11,075,768
GC EX2001

Claim 17	Analysis	Select Evidence
a transceiver-control circuity configured for:	The Samsung includes a Qualcomm SM8450 Snapdragon 8 chipset, which includes the X65 5G modem-RF system. The X65 combines Modem, RF transceiver and RF Front-End all into one chipset. Thus, the Samsung must include transceiver-control circuity configured for 5G signal transmission and receiving.	PLATFORM — OS: Android 12, One UI 4.1 Chipset: Exynos 2200 (4 nm) - Europe Qualcomm SM8450 Snapdragon 8 Gen 1 (4 nm) - ROW CPU: Octa-core (1x2.8 GHz Cortex-X2 & 3x2.50 GHz Cortex-A710 & 4x1.8 GHz Cortex-A510) - Europe Octa-core (1x3.00 GHz Cortex-X2 & 3x2.40 GHz Cortex-A710 & 4x1.70 GHz Cortex-A510) - ROW Source: https://www.gsmarena.com/samsung_galaxy_s22_ultra_5g-11251.php 5G Modem-RF System Snapdragon X65 5G Modem-RF System Source: https://www.qualcomm.com/content/dam/qcomm-martech/dm-assets/documents/snapdragon-8-gen-1-mobile-platform-product-brief.pdf 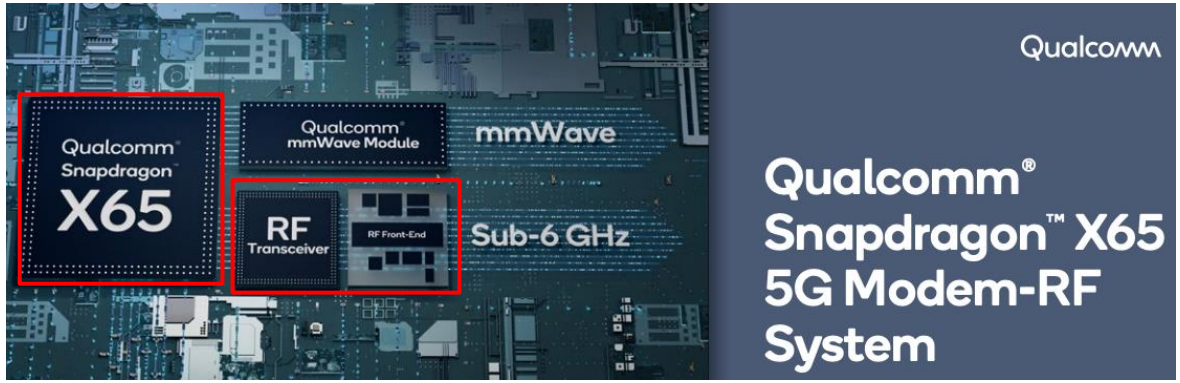 Source: https://www.qualcomm.com/content/dam/qcomm-martech/dm-assets/documents/prod_brief_qcom_x65.pdf

Claim 17	Analysis	Select Evidence
provisioning a consecutive series of Orthogonal Frequency Division Multiplexing (OFDM) subcarriers for uplink or downlink communications;	The Samsung provisions a consecutive series of OFDM subcarriers for uplink or downlink communications as specified by the 5G standard. Similar to LTE, 3GPP defines one 5G resource block to consist of 12 consecutive OFDM subcarriers.	4.4.2 Resource grid For each numerology and carrier, a resource grid of $N_{\text{grid},x}^{\text{size},\mu} N_{\text{sc}}^{\text{RB}}$ subcarriers and $N_{\text{symb}}^{\text{subframe},\mu}$ OFDM symbols is defined, starting at common resource block $N_{\text{grid}}^{\text{start},\mu}$ indicated by higher-layer signalling. There is one set of resource grids per transmission direction (uplink or downlink) with the subscript x set to DL and UL for downlink and uplink, respectively. When there is no risk for confusion, the subscript x may be dropped. There is one resource grid for a given antenna port p, subcarrier spacing configuration μ, and transmission direction (downlink or uplink). The carrier bandwidth $N_{\text{grid}}^{\text{size},\mu}$ for subcarrier spacing configuration μ is given by the higher-layer parameter *carrierBandwidth* in the *SCS-SpecificCarrier* IE. The starting position $N_{\text{grid}}^{\text{start},\mu}$ for subcarrier spacing configuration μ is given by the higher-layer parameter *offsetToCarrier* in the *SCS-SpecificCarrier* IE. The frequency location of a subcarrier refers to the center frequency of that subcarrier. * * * * 4.4.4 Resource blocks 4.4.4.1 General A resource block is defined as $N_{\text{sc}}^{\text{RB}} = 12$ consecutive subcarriers in the frequency domain. Source: https://www.etsi.org/deliver/etsi_ts/138200_138299/138211/15.02.00_60/ts_138211v150200p.pdf

<table>
<tr><th>Claim 17</th><th>Analysis</th><th>Select Evidence</th></tr>
<tr>
<td>provisioning a plurality of different selectable subcarrier spacings for the consecutive series of OFDM subcarriers; and</td>
<td>5G standard supports multiple OFDM numerologies, subcarrier spacings can be selected from 15kHz, 30kHz, 60kHz, 120kHz and 240kHz.</td>
<td>

4.2 Numerologies

Multiple OFDM numerologies are supported as given by Table 4.2-1 where μ and the cyclic prefix for a bandwidth part are obtained from the higher-layer parameter *subcarrierSpacing* and *cyclicPrefix*, respectively.

Table 4.2-1: Supported transmission numerologies.

μ	$\Delta f = 2^{\mu} \cdot 15$[kHz]	Cyclic prefix
0	15	Normal
1	30	Normal
2	60	Normal, Extended
3	120	Normal
4	240	Normal

* * * *

Δf Subcarrier spacing

* * * *

μ Subcarrier spacing configuration, $\Delta f = 2^{\mu} \cdot 15$[kHz]

Source:
https://www.etsi.org/deliver/etsi_ts/138200_138299/138211/15.02.00_60/ts_138211v150200p.pdf

</td>
</tr>
</table>

Claim 17	Analysis	Select Evidence
performing discrete Fourier transform (DFT) coding on a plurality of data symbols to produce DFT coded symbols; and	The Samsung performs discrete Fourier transform (DFT) coding on a plurality of data symbols to produce DFT coded symbols. As shown to the right, a block of data symbols "x(0)…" is transformed using a DFT to generate "y(0)…" complex-valued data symbols which is DFT coded symbols.	6.3.1.4 Transform precoding If transform precoding is not enabled according to 6.1.3 of [6, TS38.214], $y^{(\lambda)}(i) = x^{(\lambda)}(i)$ for each layer $\lambda = 0,1,\ldots,\upsilon-1$. If transform precoding is enabled according to 6.1.3 of [6, TS38.214], $\upsilon = 1$ and $\tilde{x}^{(0)}(i)$ depends on the configuration of phase-tracking reference signals. If the procedure in [6, TS 38.214] indicates that phase-tracking reference signals are not being used, the block of complex-valued symbols $x^{(0)}(0),\ldots,x^{(0)}(M_{\text{symb}}^{\text{layer}}-1)$ for the single layer $\lambda = 0$ shall be divided into $M_{\text{symb}}^{\text{layer}} / M_{\text{sc}}^{\text{PUSCH}}$ sets, each corresponding to one OFDM symbol and $\tilde{x}^{(0)}(i) = x^{(0)}(i)$. If the procedure in [6, TS 38.214] indicates that phase-tracking reference signals are being used, the block of complex-valued symbols $x^{(0)}(0),\ldots,x^{(0)}(M_{\text{symb}}^{\text{layer}}-1)$ shall be divided into sets, each set corresponding to one OFDM symbol, and where set l contains $M_{\text{sc}}^{\text{PUSCH}} - \varepsilon_l N_{\text{samp}}^{\text{group}} N_{\text{group}}^{\text{PTRS}}$ symbols and is mapped to the complex-valued symbols $\tilde{x}^{(0)}(lM_{\text{sc}}^{\text{PUSCH}} + i')$ corresponding to OFDM symbol l prior to transform precoding, with $i' \in \{0,1,\ldots,M_{\text{sc}}^{\text{PUSCH}}-1\}$ and $i' \neq m$. The index m of PT-RS samples in set l, the number of samples per PT-RS group $N_{\text{samp}}^{\text{group}}$, and the number of PT-RS groups $N_{\text{group}}^{\text{PTRS}}$ are defined in clause 6.4.1.2.2.2. The quantity $\varepsilon_l = 1$ when OFDM symbol l contains one or more PT-RS samples, otherwise $\varepsilon_l = 0$. * * * * Transform precoding shall be applied according to $$y^{(0)}(l \cdot M_{\text{sc}}^{\text{PUSCH}} + k) = \frac{1}{\sqrt{M_{\text{sc}}^{\text{PUSCH}}}} \sum_{i=0}^{M_{\text{sc}}^{\text{PUSCH}}-1} \tilde{x}^{(0)}(l \cdot M_{\text{sc}}^{\text{PUSCH}} + i) e^{-j\frac{2\pi ik}{M_{\text{sc}}^{\text{PUSCH}}}}$$ $$k = 0,\ldots,M_{\text{sc}}^{\text{PUSCH}}-1$$ $$l = 0,\ldots,M_{\text{symb}}^{\text{layer}} / M_{\text{sc}}^{\text{PUSCH}}-1$$ resulting in a block of complex-valued symbols $y^{(0)}(0),\ldots,y^{(0)}(M_{\text{symb}}^{\text{layer}}-1)$. The variable $M_{\text{sc}}^{\text{PUSCH}} = M_{\text{RB}}^{\text{PUSCH}} \cdot N_{\text{sc}}^{\text{RB}}$, where $M_{\text{RB}}^{\text{PUSCH}}$ represents the bandwidth of the PUSCH in terms of resource blocks, and shall fulfil $$M_{\text{RB}}^{\text{PUSCH}} = 2^{\alpha_2} \cdot 3^{\alpha_3} \cdot 5^{\alpha_5}$$ where $\alpha_2, \alpha_3, \alpha_5$ is a set of non-negative integers. Source: https://www.etsi.org/deliver/etsi_ts/138200_138299/138211/15.02.00_60/ts_138211v150200p.pdf

Claim 17	Analysis	Select Evidence
an OFDM transceiver communicatively coupled to the transceiver-control circuitry and configured for: performing an inverse-DFT on the coded symbols to produce a single-carrier frequency division multiple access signal that comprises a sum of the consecutive series of OFDM subcarriers; and	The Samsung's Snapdragon chipset includes the X65 5G modem-RF system, which includes an RF transceiver to send and receive OFDM signals. 5G NR supports the same access scheme SC-FDMA in the uplink, same as LTE's uplink. The OFDM transceiver performs an IDFT on the coded data symbols described above to produce a time-domain signal. As shown to the right, the OFDM baseband signal generation equation comprises a sum of the consecutive series of OFDM subcarriers ($N_{grid,x}^{size,\mu} N_{sc}^{RB}$) described above.	 Source: https://www.qualcomm.com/content/dam/qcomm-martech/dm-assets/documents/prod_brief_qcom_x65.pdf For 5G NR, as specified in 3GPP Release 15, the standardization organization decided to use cyclic prefix based orthogonal frequency division multiplex (CP-OFDM) as the access scheme. Unlike LTE, 5G NR also supports CP-OFDM in the uplink direction. But LTE's discrete Fourier transform spread OFDM (DFT-s-OFDM) uplink scheme, better known as single carrier frequency division multiplex (SC-FDMA), is still a valid access scheme and support is mandatory for any 5G terminal. The network decides which of the two schemes is used in the uplink. Source: https://www.rohde-schwarz.com/us/solutions/test-and-measurement/wireless-communication/cellular-standards/5g-test-and-measurement/embb/5g-waveforms/5g-waveforms_230224.html 5.3.1 OFDM baseband signal generation for all channels except PRACH The time-continuous signal $s_l^{(p,\mu)}(t)$ on antenna port p and subcarrier spacing configuration μ for OFDM symbol $l \in \{0,1,\ldots,N_{slot}^{subframe,\mu} N_{symb}^{slot} - 1\}$ in a subframe for any physical channel or signal except PRACH is defined by $$s_l^{(p,\mu)}(t) = \sum_{k=0}^{N_{grid}^{size,\mu} N_{sc}^{RB} - 1} a_{k,l}^{(p,\mu)} \cdot e^{j2\pi\left(k + k_0^{\mu} - N_{grid,x}^{size,\mu} N_{sc}^{RB}/2\right)\Delta f\left(t - N_{CP,l}^{\mu} T_c - t_{start,l}^{\mu}\right)}$$ $$k_0^{\mu} = \left(N_{grid,x}^{start,\mu} + N_{grid,x}^{size,\mu}/2\right) N_{sc}^{RB} - \left(N_{grid,x}^{start,\mu_0} + N_{grid,x}^{size,\mu_0}/2\right) N_{sc}^{RB} 2^{\mu_0 - \mu}$$ Source: https://www.etsi.org/deliver/etsi_ts/138200_138299/138211/15.02.00_60/ts_138211v150200p.pdf

Claim 17	Analysis	Select Evidence
transmitting the single-carrier frequency division multiple access signal in the mobile radio communications network;	After the generation of the SC-FDMA signal, the Samsung modulates and upconverts the signal for transmitting the signal in the mobile radio communications network.	**5.4 Modulation and upconversion** Modulation and upconversion to the carrier frequency f_0 of the complex-valued OFDM baseband signal for antenna port p, subcarrier spacing configuration μ, and OFDM symbol l in a subframe assumed to start at $t = 0$ is given by $$\mathrm{Re}\ s_l^{(p,\mu)}(t)\ e^{j2\ f_0\left(t - t_{start,l}^{\mu} - N_{CP,l}^{\mu} T_c\right)}$$ for all channels and signals except PRACH and by $$\mathrm{Re}\left\{s_l^{(p,\mu)}(t)\ e^{j2\ f_0 t}\right\}$$ Source: https://www.etsi.org/deliver/etsi_ts/138200_138299/138211/15.02.00_60/ts_138211v150200p.pdf 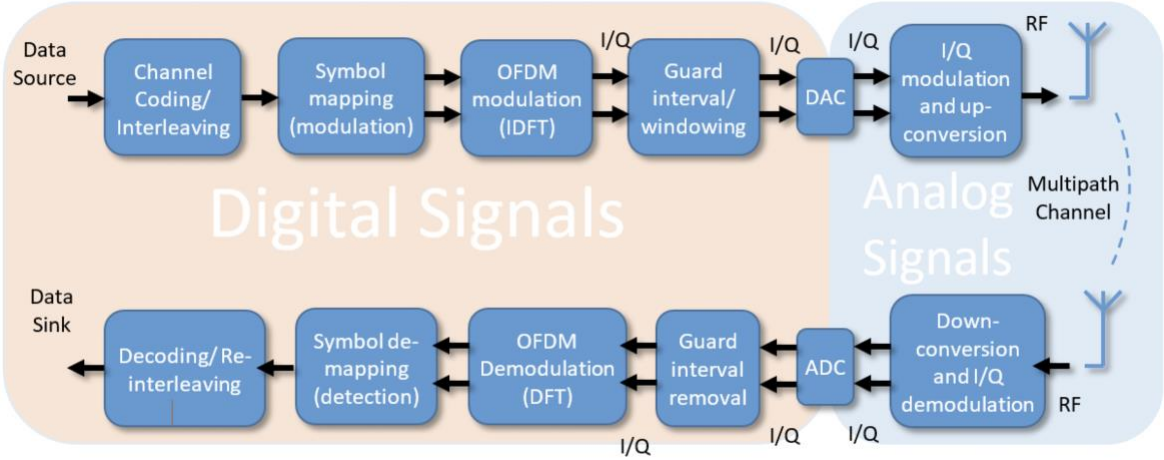 Source: https://www.mdpi.com/2078-2489/11/1/20/htm

Claim 17	Analysis	Select Evidence
wherein provisioning the plurality of different selectable subcarrier spacings comprises providing the single-carrier frequency division multiple access signal with a particular one of a set of different symbol periods by selecting one of the plurality of different selectable subcarrier spacings.	As described above 5G standard specifies the subcarrier spacing to be selected from 15kHz, 30kHz, 60kHz, 120kHz and 240 kHz. The 5G standard specifies the duration of one subframe to be 1ms and Number of OFDM symbols per slot to be 14 (except when having extended CP at 60kHz SCS). When the subcarrier spacing changes, the number of slots in one subframe changes. For example, OFDM symbol duration is approximately 66.6 μs for 15kHz SCS, and the OFDM symbol duration is halved when SCS is doubled.	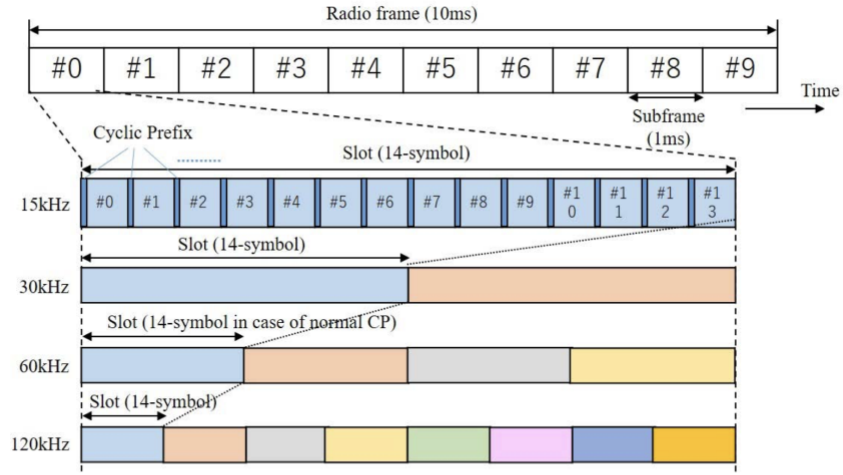 **Figure 5.5.4.1-1: Frame structure in NR** In turn, each subframe consists of 1/2/4/8/16 slots -shown in different colors- depending on the selected SCS/numerology. The figure shows the cases of SCS values of 15; 30; 60 and 120 KHz, while the table below provides the full list of possible numerologies in NR. As shown in the figure for the 15 kHz case, each slot consists of 14 OFDM symbols (independently of the SCS) preceded by a cyclic prefix (CP). * * * * **Table 5.5.4.1-2: Multiple numerologies in NR** Note: Additional specific numerologies are defined for PRACH, as described in Section 5.5.4.3. Note that, for the 60 kHz SCS, an extended CP is possible. The extended CP is approximately four times longer than the normal CP and is used for cells having large delay spread. In this case, one slot consists of only 12 OFDM symbols. The OFDM symbol duration and CP length are inversely proportional of the SCS. E.g. for 15 kHz SCS, the OFDM symbol duration is approximately 66.6 μs and the CP length is approximately 4.7 μs. When the SCS is doubled, i.e. 30 kHz, the OFDM and CP lengths are approximately devided by two compared to the 15kHz SCS. Source: https://www.etsi.org/deliver/etsi_tr/121900_121999/121915/15.00.00_60/tr_121915v150000p.pdf

Cyclic Prefix	subcarrier spacing (SCS) [kHz]	Number of subframes per radio frame	Number of slots per subframe	Number of OFDM symbols per slot	Applicable frequency range
normal	15	10	1	14	FR1
normal	30	10	2	14	FR1
normal	60	10	4	14	FR1 and FR2
extended	60	10	4	12	FR1 and FR2
normal	120	10	8	14	FR2
normal	240	10	16	14	FR2

<table>
<tr><th>Claim 18</th><th>Analysis</th><th>Select Evidence</th></tr>
<tr>
<td>The apparatus of claim 17, wherein at least one of the plurality of different selectable subcarrier spacings equals at least one other of the plurality of different selectable subcarrier spacings multiplied by a scaling factor that is a power of two.</td>
<td>As described above 5G standard specifies the subcarrier spacing to be selected from 15kHz, 30kHz, 60kHz, 120kHz and 240 kHz.

As shown to the right, subcarrier spacing $\Delta f = 2^{\mu} \cdot 15[\mathrm{kHz}]$ wherein the scaling factor is the subcarrier spacing configuration μ.</td>
<td>

4.2 Numerologies

Multiple OFDM numerologies are supported as given by Table 4.2-1 where μ and the cyclic prefix for a bandwidth part are obtained from the higher-layer parameter *subcarrierSpacing* and *cyclicPrefix*, respectively.

Table 4.2-1: Supported transmission numerologies.

μ	$\Delta f = 2^{\mu} \cdot 15[\mathrm{kHz}]$	Cyclic prefix
0	15	Normal
1	30	Normal
2	60	Normal, Extended
3	120	Normal
4	240	Normal

* * * *

Δf Subcarrier spacing

* * * *

μ Subcarrier spacing configuration, $\Delta f = 2^{\mu} \cdot 15[\mathrm{kHz}]$

Source:
https://www.etsi.org/deliver/etsi_ts/138200_138299/138211/15.02.00_60/ts_138211v150200p.pdf
</td>
</tr>
</table>

Claim 19	Analysis	Select Evidence
The apparatus of claim 17, wherein the OFDM transceiver is further configured to add a cyclic prefix to the single-carrier frequency division multiple access signal.	The OFDM transceiver of the Samsung is further configured to add a cyclic prefix to the SC-FDMA signal prior to transmit. As shown to the right, a cyclic prefix of length $N_{CP,l}^{\mu}$ is added when converting the SC-FDMA frequency domain signal into time domain signal.	$N_{\mathrm{CP},l}^{\mu}$ Cyclic prefix length; see clause 5.3.1 * * * * 5.3 OFDM baseband signal generation 5.3.1 OFDM baseband signal generation for all channels except PRACH The time-continuous signal $s_l^{(p,\mu)}(t)$ on antenna port p and subcarrier spacing configuration μ for OFDM symbol $l \in \{0,1,\ldots,N_{\mathrm{slot}}^{\mathrm{subframe},\mu} N_{\mathrm{symb}}^{\mathrm{slot}} - 1\}$ in a subframe for any physical channel or signal except PRACH is defined by $s_l^{(p,\mu)}(t) = \sum_{k=0}^{N_{\mathrm{grid}}^{\mathrm{size},\mu} N_{\mathrm{sc}}^{\mathrm{RB}}-1} a_{k,l}^{(p,\mu)} \cdot e^{j2\pi\left(k+k_0^{\mu}-N_{\mathrm{grid},x}^{\mathrm{size},\mu} N_{\mathrm{sc}}^{\mathrm{RB}}/2\right)\Delta f\left(t-N_{\mathrm{CP},l}^{\mu} T_{\mathrm{c}}-t_{\mathrm{start},l}^{\mu}\right)}$ $k_0^{\mu} = \left(N_{\mathrm{grid},x}^{\mathrm{start},\mu} + N_{\mathrm{grid},x}^{\mathrm{size},\mu}/2\right) N_{\mathrm{sc}}^{\mathrm{RB}} - \left(N_{\mathrm{grid},x}^{\mathrm{start},\mu_0} + N_{\mathrm{grid},x}^{\mathrm{size},\mu_0}/2\right) N_{\mathrm{sc}}^{\mathrm{RB}} 2^{\mu_0-\mu}$ where $t_{\mathrm{start},l}^{\mu} \le t < t_{\mathrm{start},l}^{\mu} + \left(N_{\mathrm{u}}^{\mu} + N_{\mathrm{CP},l}^{\mu}\right) T_{\mathrm{c}}$ is the time within the subframe, $N_{\mathrm{u}}^{\mu} = 2048\kappa \cdot 2^{-\mu}$ $N_{\mathrm{CP},l}^{\mu} = \begin{cases} 512\kappa \cdot 2^{-\mu} & \text{extended cyclic prefix} \\ 144\kappa \cdot 2^{-\mu} + 16\kappa & \text{normal cyclic prefix},\ l = 0 \text{ or } l = 7 \cdot 2^{\mu} \\ 144\kappa \cdot 2^{-\mu} & \text{normal cyclic prefix},\ l \ne 0 \text{ and } l \ne 7 \cdot 2^{\mu} \end{cases}$ Source: https://www.etsi.org/deliver/etsi_ts/136200_136299/136211/08.07.00_60/ts_136211v080700p.pdf

Claim 20	Analysis	Select Evidence
The apparatus of claim 17, wherein the plurality of different selectable subcarrier spacings comprise integer multiples of a first subcarrier spacing.	As described above 5G standard specifies the subcarrier spacing to be selected from 15kHz, 30kHz, 60kHz, 120kHz and 240 kHz. As shown to the right, subcarrier spacing is equal to an integer multiples to a first subcarrier spacing, wherein the integers are 2, 4, 8, 16.	4.2 Numerologies Multiple OFDM numerologies are supported as given by Table 4.2-1 where μ and the cyclic prefix for a bandwidth part are obtained from the higher-layer parameter *subcarrierSpacing* and *cyclicPrefix*, respectively. **Table 4.2-1: Supported transmission numerologies.** μ | $\Delta f = 2^{\mu} \cdot 15$[kHz] | **Cyclic prefix** 0 | 15 | Normal 1 | 30 | Normal 2 | 60 | Normal, Extended 3 | 120 | Normal 4 | 240 | Normal * * * * Δf Subcarrier spacing * * * * μ Subcarrier spacing configuration, $\Delta f = 2^{\mu} \cdot 15$[kHz] Source: https://www.etsi.org/deliver/etsi_ts/138200_138299/138211/15.02.00_60/ts_138211v150200p.pdf

GLOBAL IP LAW GROUP

Claim 21	Analysis	Select Evidence
The apparatus of claim 17, wherein each of the plurality of different selectable subcarrier spacings is configured for one of a plurality of different deployment scenarios, the plurality of different deployment scenarios comprising different system requirements of different channel characteristics.	5G NR covers wide range of frequency channels, and because of the different characteristics of each channel, 3GPP provides selectable subcarrier spacings for different channels in order to provide efficiency and performance. For example, in the lower frequency bands, 15kHz, 30kHz and 60kHz subcarrier spacing can provide small footprint in the limited spectrum. In the high frequency bands such as mmWave, larger subcarrier spacings like 120kHz and 240kHz can tolerate more of Doppler spread and channel fading.	To cope with various deployment scenarios, NR supports a wide range of carrier frequencies (within two possible ranges) and channel bandwidths, as shown in the table below. **Table 5.5.4.1-1: NR channel bandwidth** Frequency range: FR1 — Frequency range: 410 MHz – 7125 MHz — Supported channel bandwidth [MHz]: 5, 10, 15, 20, 25, 30, 40, 50, 60, 80, 90, 100 Frequency range: FR2 — Frequency range: 24250 MHz – 52600 MHz — Supported channel bandwidth [MHz]: 50, 100, 200, 400 To allow for such a flexibility, NR uses a flexible frame structure, with different Subcarrier Spacings (SCS). The SCS is the distance between the centres of two consecutive subcarriers, and the possible values for SCS are (in kHz): 15; 30; 60; 120 and 240. This is referred to as "multiple numerologies". * * * * **Table 5.5.4.1-2: Multiple numerologies in NR** Cyclic Prefix: normal — subcarrier spacing (SCS) [kHz]: 15 — Number of subframes per radio frame: 10 — Number of slots per subframe: 1 — Number of OFDM symbols per slot: 14 — Applicable frequency range: FR1 Cyclic Prefix: normal — subcarrier spacing (SCS) [kHz]: 30 — Number of subframes per radio frame: 10 — Number of slots per subframe: 2 — Number of OFDM symbols per slot: 14 — Applicable frequency range: FR1 Cyclic Prefix: normal — subcarrier spacing (SCS) [kHz]: 60 — Number of subframes per radio frame: 10 — Number of slots per subframe: 4 — Number of OFDM symbols per slot: 14 — Applicable frequency range: FR1 and FR2 Cyclic Prefix: extended — subcarrier spacing (SCS) [kHz]: 60 — Number of subframes per radio frame: 10 — Number of slots per subframe: 4 — Number of OFDM symbols per slot: 12 — Applicable frequency range: FR1 and FR2 Cyclic Prefix: normal — subcarrier spacing (SCS) [kHz]: 120 — Number of subframes per radio frame: 10 — Number of slots per subframe: 8 — Number of OFDM symbols per slot: 14 — Applicable frequency range: FR2 Cyclic Prefix: normal — subcarrier spacing (SCS) [kHz]: 240 — Number of subframes per radio frame: 10 — Number of slots per subframe: 16 — Number of OFDM symbols per slot: 14 — Applicable frequency range: FR2 Note: Additional specific numerologies are defined for PRACH, as described in Section 5.5.4.3. Note that, for the 60 kHz SCS, an extended CP is possible. The extended CP is approximately four times longer than the normal CP and is used for cells having large delay spread. In this case, one slot consists of only 12 OFDM symbols. Source: https://www.etsi.org/deliver/etsi_tr/121900_121999/121915/15.00.00_60/tr_121915v150000p.pdf • In lower frequency bands, like **Sub-3GHz**, **Sub-6 GHz**, we don't have wider spectrum. So to get as many subcarriers as possible in these limited spectrum, we need to use subcarrier spacing as small as possible. That's why we use small subcarrier spacing like 15 Khz, **30 Khz**, **60 Khz** in lower bands • When operating in very high frequency like mmWave, as carrier frequency gets higher, the degree of frequency drift by moving transmitter or reciever gets higher i.e, **Doppler spread** gets wider as carrier frequency gets higher. To tolerate this kind of wide range of frequency drift (or shift), we need to use wider subcarrier spacing. So **3GPP** provided option to use very wide subcarrier spacing like **120 Khz** or **240 Khz** • As frequency goes higher, the **degree of phase noise** would increase. So we need to implement more sophisticated mechanism for **phase noise** estimation and correction. It is easier to implement this kind **mechanism** with wider subcarrier spacing Source: https://www.techplayon.com/5g-nr-numerology-subcarrier-spcaing-scs/

GLOBAL IP LAW GROUP

Claim 22	Analysis	Select Evidence
The apparatus of claim 17, wherein the plurality of different selectable subcarrier spacings produces a different number of symbols per frame.	As described above 5G standard specifies one frame as 10 ms duration. Depends on the subcarrier spacings, number of OFDM symbols consisted in one frame changes. For $\mu = [0, 1, 2, 3, 4]$ the number of OFDM symbols per frame are equal to $N_{\text{symb}}^{\text{slot}} \times N_{\text{slot}}^{\text{frame},\mu} = [140, 280, 560, 1120, 2240]$.	**4.3.1 Frames and subframes** Downlink and uplink transmissions are organized into frames with $T_f = (\Delta f_{max} N_f / 100) \cdot T_c = 10\,\text{ms}$ duration, each consisting of ten subframes of $T_{sf} = (\Delta f_{max} N_f / 1000) \cdot T_c = 1\,\text{ms}$ duration. The number of consecutive OFDM symbols per subframe is $N_{\text{symb}}^{\text{subframe},\mu} = N_{\text{symb}}^{\text{slot}} N_{\text{slot}}^{\text{subframe},\mu}$. Each frame is divided into two equally-sized half-frames of five subframes each with half-frame 0 consisting of subframes 0 – 4 and half-frame 1 consisting of subframes 5 – 9. * * * * **4.3.2 Slots** For subcarrier spacing configuration μ, slots are numbered n_s^{μ} $\{0, \ldots, N_{\text{slot}}^{\text{subframe},\mu} - 1\}$ in increasing order within a subframe and $n_{s,f}^{\mu}$ $\{0, \ldots, N_{\text{slot}}^{\text{frame},\mu} - 1\}$ in increasing order within a frame. There are $N_{\text{symb}}^{\text{slot}}$ consecutive OFDM symbols in a slot where $N_{\text{symb}}^{\text{slot}}$ depends on the cyclic prefix as given by Tables 4.3.2-1 and 4.3.2-2. The start of slot n_s^{μ} in a subframe is aligned in time with the start of OFDM symbol $n_s^{\mu} N_{\text{symb}}^{\text{slot}}$ in the same subframe. * * * * **Table 4.3.2-1: Number of OFDM symbols per slot, slots per frame, and slots per subframe for normal cyclic prefix.** μ | $N_{\text{symb}}^{\text{slot}}$ | $N_{\text{slot}}^{\text{frame},\mu}$ | $N_{\text{slot}}^{\text{subframe},\mu}$ 0 | 14 | 10 | 1 1 | 14 | 20 | 2 2 | 14 | 40 | 4 3 | 14 | 80 | 8 4 | 14 | 160 | 16 * * * * **Table 4.3.2-2: Number of OFDM symbols per slot, slots per frame, and slots per subframe for extended cyclic prefix.** μ | $N_{\text{symb}}^{\text{slot}}$ | $N_{\text{slot}}^{\text{frame},\mu}$ | $N_{\text{slot}}^{\text{subframe},\mu}$ 2 | 12 | 40 | 4 Source: https://www.etsi.org/deliver/etsi_ts/138200_138299/138211/15.02.00_60/ts_138211v150200p.pdf