UNITED STATES PATENT AND TRADEMARK OFFICE

UNITED STATES DEPARTMENT OF COMMERCE
United States Patent and Trademark Office
Address: COMMISSIONER FOR PATENTS
P.O. Box 1450
Alexandria, Virginia 22313-1450
www.uspto.gov

APPLICATION NO.	FILING DATE	FIRST NAMED INVENTOR	ATTORNEY DOCKET NO.	CONFIRMATION NO.
10/145,854	05/14/2002	Steve J. Shattil	CINET 01	6398

7590 11/27/2023

Steven J Shattil
P.O. Box 17355
Boulder, CO 80308-0355

EXAMINER
ABELSON, RONALD B

ART UNIT	PAPER NUMBER
2419	

MAIL DATE	DELIVERY MODE
11/27/2023	PAPER

Please find below and/or attached an Office communication concerning this application or proceeding.

The time period for reply, if any, is set in the attached communication.

PTOL-90A (Rev. 04/07)

UNITED STATES PATENT AND TRADEMARK OFFICE

Commissioner for Patents
United States Patent and Trademark Office
P.O. Box 1450
Alexandria, VA 22313-1450
www.uspto.gov

In re Application of	:	
Shattil, Steve J.	:	
Application No. 10/145,854	:	DECISION ON PETITION
Filed: 14 May 2002	:	
For CARRIER INTERFEROMETRY	:	
NETWORKS	:	

The above-identified application was forwarded to the Office of Petitions for review of the papers. A review of the record reveals that the above-captioned application was erroneously issued as U.S. Patent No. 10,673,758.

BACKGROUND

The present application was filed on May 14, 2002.

Prosecution led to the issuing of a Notice Allowance and Fee(s) Due and a Notice of Allowability on February 25, 2009. The Notice of Allowance and Fee(s) Due indicated that the $755 issue fee and the $300 publication fee were due on May 26, 2009, or the application would be regarded as abandoned.

On May 28, 2009, an untimely payment of the issue fee and publication fee was received, and a notice of abandonment was issued on June 24, 2009.

On July 15, 2009, a petition under 37 CFR 1.181 to withdraw the holding of abandonment of the application was received.

A decision dismissing the petition under 37 CFR 1.181 to withdraw the abandonment was issued on June 21, 2010.

An ePetition to revive the application under 37 CFR 1.137(a) was filed April 9, 2020. The ePetition was automatically granted in a decision issued the same day.

A corrected decision on the petition filed April 9, 2020 under 37 CFR 1.137(a) was issued on April 23, 2020. The decision of April 23, 2023 dismissed the petition under 37 CFR 1.137(a) and indicated that the application remained abandoned.

On May 13, 2020, an issue notification was issued indicating that patent 10,673,758 would issue on June 2, 2020.

On June 2, 2020, a patent-like document was published.

DISCUSSION

Failure to pay the required issue fee and publication fee prior to the expiration of the three-month statutory period provided in a Notice of Allowance will result in the abandonment of an application. *See* 35 U.S.C. 151(b). As explained above, the USPTO record indicates that applicant did not submit payment of the required issue fee and publication fee prior to the deadline for payment, and as a result, the application became abandoned on May 27, 2009.

An ePetition to revive under 37 CFR 1.137(a) was filed on April 9, 2020. A decision automatically granting the ePetition to revive under 37 CFR 1.137(a) was issued the same day by the Patents Electronic Filing System. A corrected decision issued on April 23, 2020, vacating the decision automatically granted on April 9, 2020. The decision issued on April 23, 2020, dismissed the petition under 1.137(a) and requested additional information regarding the delay in filing a grantable petition[1]. No response to the decision of April 23, 2020, has been received. Therefore, this application remains abandoned.

Since this application is abandoned, no patent has issued. The following errata will be published in the Official Gazette:

> "All references to Patent No. 10,673,758 to Steve J. Shattil of Boulder, CO for CARRIER INTERFEROMETRY NETWORKS appearing in the Official Gazette of June 2, 2020, should be deleted since no patent was granted."

Further correspondence with respect to this matter should be delivered through one of the following mediums:

By mail: Mail Stop PETITIONS
Commissioner for Patents
Post Office Box 1450
Alexandria, VA 22313-1450

By hand: Customer Service Window
Mail Stop Petitions

[1] The USPTO requires additional information concerning whether a delay in seeking the revival of an abandoned application was unintentional where the petition to revive was filed more than two years after the date the application became abandoned. See Clarification of the Practice for Requiring Additional Information in Petitions Filed in Patent Applications and Patents Based on Unintentional Delay, 85 FR 12222 (March 2, 2020). Therefore, additional information that provides an explanation of the circumstances surrounding the delay that establishes the entire delay was unintentional is required.

Randolph Building
40l Dulany Street
Alexandria, VA 22314

By fax: (571) 273-8300
ATTN: Office of Petitions

By internet: Patents Electronic Filing System[2]

Any questions concerning this matter may be directed to Jacob F Bétit at (571) 272-4075.

/Jacob F Bétit/
Jacob F Bétit
Deputy Director
Office of Petitions

[2] https://www.uspto.gov/patents/apply (for help using Patents Electronic Filing System call the Patent Electronic Business Center at (866) 217-9197).

UNITED STATES PATENT AND TRADEMARK OFFICE

CERTIFICATE OF CORRECTION

PATENT NO. : 10,673,758 B2
APPLICATION NO. : 10/145854
DATED : June 2, 2020
INVENTOR(S) : Steve Shattil

It is certified that error appears in the above-identified patent and that said Letters Patent is hereby corrected as shown below:

In the Drawings

Please amend FIG. 7 as indicated in the attached Drawing Sheet 7.

In the Specification

Column 14, Line 28, please amend "k/f_2" to read "k/f_s".

Column 14, Line 31, please amend "$f(\varphi) = \{ e^{j\theta 1}, e^{j\theta 2}, \ldots , e^{j\theta N} \} = \{ e^{j0}, e^{j2\pi k/N}, \ldots , e^{j(N-1)\cdot 2\pi k/N} \}$" to read "$f(\varphi) = \{e^{j\varphi 1}, e^{j\varphi 2}, \ldots , e^{j\varphi N}\} = \{e^{j0}, e^{j2\pi k/N}, \ldots , e^{j(N-1)\cdot 2\pi k/N} \}$".

Column 14, Line 40, please amend "$(N-1)//f_s$" to read "$(N-1)/f_s$".

Column 14, Line 45, please amend "$(N-1)//f_s$" to read "$(N-1)/f_s$".

Signed and Sealed this
Twenty-fourth Day of November, 2020

Andrei Iancu

Andrei Iancu
Director of the United States Patent and Trademark Office

	$s_0(\,)$	$s_1(\,)$ 701	$s_2(\,)$	$s_{N-1}(\,)$
$w_1 = \Sigma(\,)$:	$e^{i2\pi(0)(0)/N}$	$e^{i2\pi(1)(0)/N}$	$e^{i2\pi(2)(0)/N}$	$e^{i2\pi(N-1)(0)/N}$
$w_2 = \Sigma(\,)$:	$e^{i2\pi(0)(1)/N}$	$e^{i2\pi(1)(1)/N}$	$e^{i2\pi(2)(1)/N}$	$e^{i2\pi(N-1)(1)/N}$
$w_3 = \Sigma(\,)$:	$e^{i2\pi(0)(2)/N}$	$e^{i2\pi(1)(2)/N}$	$e^{i2\pi(2)(2)/N}$	$e^{i2\pi(N-1)(2)/N}$
			703	
$w_N = \Sigma(\,)$:	$e^{i2\pi(0)(N-1)/N}$	$e^{i2\pi(1)(N-1)/N}$	$e^{i2\pi(2)(N-1)/N}$	$e^{i2\pi(N-1)(N-1)/N}$

FIG. 7

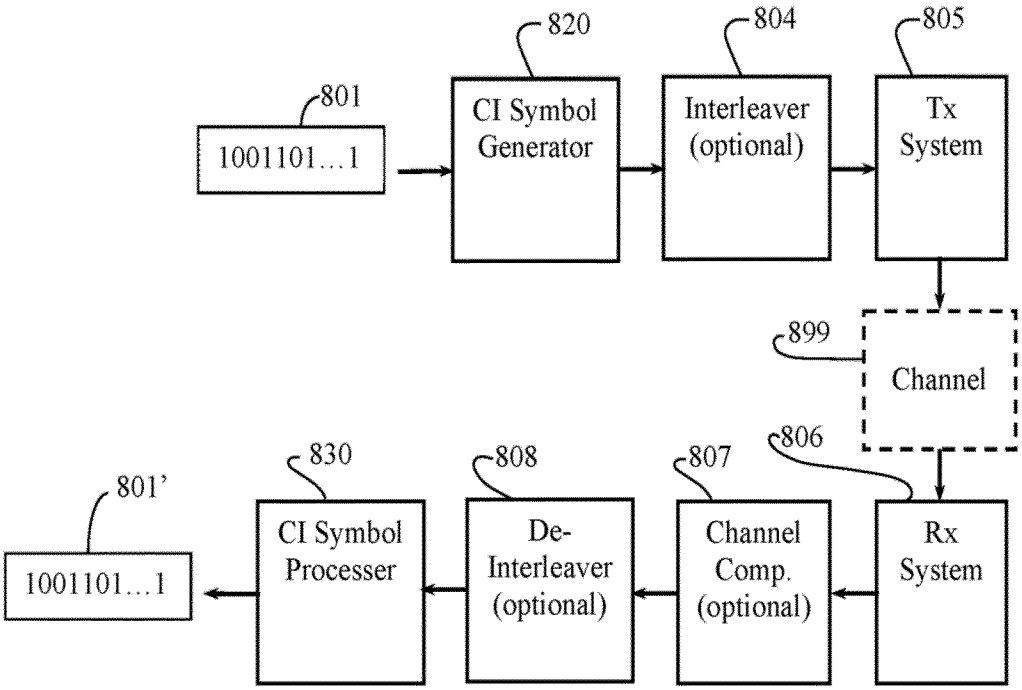

FIG. 8A

UNITED STATES PATENT AND TRADEMARK OFFICE

UNITED STATES DEPARTMENT OF COMMERCE
United States Patent and Trademark Office
Address: COMMISSIONER FOR PATENTS
P.O. Box 1450
Alexandria, Virginia 22313-1450
www.uspto.gov

APPLICATION NO.	FILING DATE	FIRST NAMED INVENTOR	ATTORNEY DOCKET NO.	CONFIRMATION NO.
10/145,854	05/14/2002	Steve J. Shattil	CINET 01	6398

7590 10/22/2020

Steven J Shattil
P.O. Box 17355
Boulder, CO 80308-0355

EXAMINER
ABELSON, RONALD B

ART UNIT	PAPER NUMBER
2419	

MAIL DATE	DELIVERY MODE
10/22/2020	PAPER

Please find below and/or attached an Office communication concerning this application or proceeding.

The time period for reply, if any, is set in the attached communication.

PTOL-90A (Rev. 04/07)

UNITED STATES PATENT AND TRADEMARK OFFICE

Commissioner for Patents
United States Patent and Trademark Office
P.O. Box 1450
Alexandria, VA 22313-1450
www.uspto.gov

Patent No.: 10673758
Issue Date: 06/02/2020
Appl. No.: 10/145,854
Filed: 05/14/2002

PART (A) RESPONSE FOR CERTIFICATES OF CORRECTION

This is a decision on the Certificate of Correction request filed 06 October 2020.

The request for issuance of Certificate of Correction for the above-identified correction(s) under the provisions of 37 CFR 1.322 and/or 1.323 is hereby:

(Check one)
☑ Approved ☐ Approved in Part ☐ Denied

Comments: ____

PART (B) PETITION UNDER 37 CFR 1.324 OR 37 CFR 1.48

☐ This is a decision on the petition filed ____ to correct inventorship under 37 CFR 1.324.

☐ This is a decision on the request under 37 CFR 1.48, petition filed ____. In view of the fact that the patent has already issued, the request under 37 CFR 1.48 has been treated as a petition to correct inventorship under 37 CFR 1.324.

The petition is hereby: ☐ Granted ☐ Dismissed

Comment: ____

The patented filed is being forwarded to Certificate of Corrections Branch for issuance of a certificate naming only the actual inventor or inventors.

/AYAZ R SHEIKH/
Supervisory Patent Examiner, Art Unit 2476
Technology Center 2400
Phone: (571)272-3795

Certificates of Correction Branch email: CustomerServiceCoC@uspto.gov CoC Central Phone Number: (703) 756-1814

UNITED STATES PATENT AND TRADEMARK OFFICE

Commissioner for Patents
United States Patent and Trademark Office
P.O. Box 1450
Alexandria, VA 22313-1450
www.uspto.gov

Patent No.: 10673758
Issue Date: 06/02/2020
Appl. No.: 10/145,854
Filed: 05/14/2002

PART (A) RESPONSE FOR CERTIFICATES OF CORRECTION

This is a decision on the Certificate of Correction request filed 06 October 2020.

The request for issuance of Certificate of Correction for the above-identified correction(s) under the provisions of 37 CFR 1.322 and/or 1.323 is hereby:

(Check one)
☑ Approved ☐ Approved in Part ☐ Denied

Comments: ____

PART (B) PETITION UNDER 37 CFR 1.324 OR 37 CFR 1.48

☐ This is a decision on the petition filed ____ to correct inventorship under 37 CFR 1.324.

☐ This is a decision on the request under 37 CFR 1.48, petition filed ____. In view of the fact that the patent has already issued, the request under 37 CFR 1.48 has been treated as a petition to correct inventorship under 37 CFR 1.324.

The petition is hereby: ☐ Granted ☐ Dismissed

Comment: ____

The patented filed is being forwarded to Certificate of Corrections Branch for issuance of a certificate naming only the actual inventor or inventors.

/AYAZ R SHEIKH/
Supervisory Patent Examiner, Art Unit 2476
Technology Center 2400
Phone: (571)272-3795

Certificates of Correction Branch email: CustomerServiceCoC@uspto.gov CoC Central Phone Number: (703) 756-1814

IN THE UNITED STATES PATENT AND TRADEMARK OFFICE

In re Letters Patent of:

Steve Shattil Confirmation No. 6398

Patent No. 10,673,758

Issued 6/2/2020

For: Carrier Interferometry Networks

REQUEST FOR CERTIFICATE OF CORRECTION PURSUANT TO 37 CFR 1.323

Attention: Certificate of Corrections Branch

Commissioner for Patents

P.O. Box 1450

Alexandria, VA 22313-1450

Dear Sir:

Upon reviewing the above-identified patent, Patentee noted typographical errors which should be corrected.

In the Drawings:

In FIG. 7, in the exponential of each matrix element, please amend the denominator "(N-1)" to read "N", as shown in the attached Replacement Drawing sheet 7 (clean and marked-up versions).

In the Specification:

Col. 14, line 28, please amend "k/f_2" to read "k/f_s".

Col. 14, line 31, please amend "$f(\varphi) = \{e^{j\theta 1}, e^{j\theta 2}, \ldots, e^{j\theta N}\} = \{e^{j0}, e^{j2\pi k/N}, \ldots, e^{j(N-1)\cdot 2\pi k/N}\}$" to read "$f(\varphi) = \{e^{j\varphi 1}, e^{j\varphi 2}, \ldots, e^{j\varphi N}\} = \{e^{j0}, e^{j2\pi k/N}, \ldots, e^{j(N-1)\cdot 2\pi k/N}\}$".

Samsung Exhibit 1138, Page 10 of 38
Samsung Electronics Co., Ltd. et al. v. Genghiscomm Holdings LLC
IPR2025-00789

Col. 14, line 40, please amend "(N-1)//f_s" to read "(N-1)/f_s".

Col. 14, line 45, please amend "(N-1)//f_s" to read "(N-1)/f_s".

The errors were found in the application as filed by applicant. The fee set forth in 37 CFR 1.20(a) accompanies this letter.

The errors now sought to be corrected are inadvertent typographical errors of which does not involve new matter or require reexamination.

Transmitted herewith is a proposed Certificate of Correction effecting such amendment. Patentee respectfully solicits the granting of the requested Certificate of Correction.

Respectfully submitted,

/Steven J Shattil/

Steven J. Shattil, Reg. No. 40,170
P.O. Box 17355
Boulder, CO 80308-0355
(720) 234-4351

PTO/SB/44 (09-07)
Approved for use through 01/31/2020. OMB 0651-0033
U.S. Patent and Trademark Office; U.S. DEPARTMENT OF COMMERCE
Under the Paperwork Reduction Act of 1995, no persons are required to respond to a collection of information unless it displays a valid OMB control number.
(Also Form PTO-1050)

UNITED STATES PATENT AND TRADEMARK OFFICE
CERTIFICATE OF CORRECTION

PATENT NO. : 10,673,758

APPLICATION NO.: 10/145,854

ISSUE DATE : June 2, 2020

INVENTOR(S) : Shattil; Steve

It is certified that an error appears or errors appear in the above-identified patent and that said Letters Patent is hereby corrected as shown below:

Col. 14, line 28, please amend "k/f_2" to read "k/f_s".

Col. 14, line 31, please amend "$f(\varphi) = \{e^{j\theta 1}, e^{j\theta 2}, \ldots, e^{j\theta N}\} = \{e^{j0}, e^{j2\pi k/N}, \ldots, e^{j(N-1)\cdot 2\pi k/N}\}$" to read "$f(\varphi) = \{e^{j\varphi 1}, e^{j\varphi 2}, \ldots, e^{j\varphi N}\} = \{e^{j0}, e^{j2\pi k/N}, \ldots, e^{j(N-1)\cdot 2\pi k/N}\}$".

Col. 14, line 40, please amend "$(N-1)//f_s$" to read "$(N-1)/f_s$".

Col. 14, line 45, please amend "$(N-1)//f_s$" to read "$(N-1)/f_s$".

MAILING ADDRESS OF SENDER (Please do not use Customer Number below):

Steven J Shattil
PO Box 17355, Boulder, CO 80308

This collection of information is required by 37 CFR 1.322, 1.323, and 1.324. The information is required to obtain or retain a benefit by the public which is to file (and by the USPTO to process) an application. Confidentiality is governed by 35 U.S.C. 122 and 37 CFR 1.14. This collection is estimated to take 1.0 hour to complete, including gathering, preparing, and submitting the completed application form to the USPTO. Time will vary depending upon the individual case. Any comments on the amount of time you require to complete this form and/or suggestions for reducing this burden, should be sent to the Chief Information Officer, U.S. Patent and Trademark Office, U.S. Department of Commerce, P.O. Box 1450, Alexandria, VA 22313-1450. DO NOT SEND FEES OR COMPLETED FORMS TO THIS ADDRESS. **SEND TO: Attention Certificate of Corrections Branch, Commissioner for Patents, P.O. Box 1450, Alexandria, VA 22313-1450.**

If you need assistance in completing the form, call 1-800-PTO-9199 and select option 2.

PTO/SB/44 (09-07)
Approved for use through 01/31/2020. OMB 0651-0033
U.S. Patent and Trademark Office; U.S. DEPARTMENT OF COMMERCE
Under the Paperwork Reduction Act of 1995, no persons are required to respond to a collection of information unless it displays a valid OMB control number.
(Also Form PTO-1050)

UNITED STATES PATENT AND TRADEMARK OFFICE
CERTIFICATE OF CORRECTION

PATENT NO. : 10,673,758

APPLICATION NO.: 10/145,854

ISSUE DATE : June 2, 2020

INVENTOR(S) : Shattil; Steve

It is certified that an error appears or errors appear in the above-identified patent and that said Letters Patent is hereby corrected as shown below:

Drawings:

Please amend FIG. 7 as indicated in the attached clean and marked-up versions of Drawing Sheet 7.

MAILING ADDRESS OF SENDER (Please do not use Customer Number below):

Steven J Shattil
PO Box 17355, Boulder, CO 80308

This collection of information is required by 37 CFR 1.322, 1.323, and 1.324. The information is required to obtain or retain a benefit by the public which is to file (and by the USPTO to process) an application. Confidentiality is governed by 35 U.S.C. 122 and 37 CFR 1.14. This collection is estimated to take 1.0 hour to complete, including gathering, preparing, and submitting the completed application form to the USPTO. Time will vary depending upon the individual case. Any comments on the amount of time you require to complete this form and/or suggestions for reducing this burden, should be sent to the Chief Information Officer, U.S. Patent and Trademark Office, U.S. Department of Commerce, P.O. Box 1450, Alexandria, VA 22313-1450. DO NOT SEND FEES OR COMPLETED FORMS TO THIS ADDRESS. **SEND TO: Attention Certificate of Corrections Branch, Commissioner for Patents, P.O. Box 1450, Alexandria, VA 22313-1450.**

If you need assistance in completing the form, call 1-800-PTO-9199 and select option 2.

Privacy Act Statement

The **Privacy Act of 1974 (P.L. 93-579)** requires that you be given certain information in connection with your submission of the attached form related to a patent application or patent. Accordingly, pursuant to the requirements of the Act, please be advised that: (1) the general authority for the collection of this information is 35 U.S.C. 2(b)(2); (2) furnishing of the information solicited is voluntary; and (3) the principal purpose for which the information is used by the U.S. Patent and Trademark Office is to process and/or examine your submission related to a patent application or patent. If you do not furnish the requested information, the U.S. Patent and Trademark Office may not be able to process and/or examine your submission, which may result in termination of proceedings or abandonment of the application or expiration of the patent.

The information provided by you in this form will be subject to the following routine uses:

1. The information on this form will be treated confidentially to the extent allowed under the Freedom of Information Act (5 U.S.C. 552) and the Privacy Act (5 U.S.C 552a). Records from this system of records may be disclosed to the Department of Justice to determine whether disclosure of these records is required by the Freedom of Information Act.
2. A record from this system of records may be disclosed, as a routine use, in the course of presenting evidence to a court, magistrate, or administrative tribunal, including disclosures to opposing counsel in the course of settlement negotiations.
3. A record in this system of records may be disclosed, as a routine use, to a Member of Congress submitting a request involving an individual, to whom the record pertains, when the individual has requested assistance from the Member with respect to the subject matter of the record.
4. A record in this system of records may be disclosed, as a routine use, to a contractor of the Agency having need for the information in order to perform a contract. Recipients of information shall be required to comply with the requirements of the Privacy Act of 1974, as amended, pursuant to 5 U.S.C. 552a(m).
5. A record related to an International Application filed under the Patent Cooperation Treaty in this system of records may be disclosed, as a routine use, to the International Bureau of the World Intellectual Property Organization, pursuant to the Patent Cooperation Treaty.
6. A record in this system of records may be disclosed, as a routine use, to another federal agency for purposes of National Security review (35 U.S.C. 181) and for review pursuant to the Atomic Energy Act (42 U.S.C. 218(c)).
7. A record from this system of records may be disclosed, as a routine use, to the Administrator, General Services, or his/her designee, during an inspection of records conducted by GSA as part of that agency's responsibility to recommend improvements in records management practices and programs, under authority of 44 U.S.C. 2904 and 2906. Such disclosure shall be made in accordance with the GSA regulations governing inspection of records for this purpose, and any other relevant (*i.e.*, GSA or Commerce) directive. Such disclosure shall not be used to make determinations about individuals.
8. A record from this system of records may be disclosed, as a routine use, to the public after either publication of the application pursuant to 35 U.S.C. 122(b) or issuance of a patent pursuant to 35 U.S.C. 151. Further, a record may be disclosed, subject to the limitations of 37 CFR 1.14, as a routine use, to the public if the record was filed in an application which became abandoned or in which the proceedings were terminated and which application is referenced by either a published application, an application open to public inspection or an issued patent.
9. A record from this system of records may be disclosed, as a routine use, to a Federal, State, or local law enforcement agency, if the USPTO becomes aware of a violation or potential violation of law or regulation.

Electronic Patent Application Fee Transmittal

Application Number:	10145854
Filing Date:	14-May-2002
Title of Invention:	CARRIER INTERFEROMETRY NETWORKS
First Named Inventor/Applicant Name:	Steve J. Shattil
Filer:	Steven J Shattil
Attorney Docket Number:	CINET 01

Filed as Small Entity

Filing Fees for Utility under 35 USC 111(a)

Description	Fee Code	Quantity	Amount	Sub-Total in USD($)
Basic Filing:				
Pages:				
Claims:				
Miscellaneous-Filing:				
Petition:				
Patent-Appeals-and-Interference:				
Post-Allowance-and-Post-Issuance:				
CERTIFICATE OF CORRECTION	2811	1	160	160

Description	Fee Code	Quantity	Amount	Sub-Total in USD($)
Extension-of-Time:				
Miscellaneous:				
			Total in USD ($)	**160**

UNITED STATES PATENT AND TRADEMARK OFFICE

UNITED STATES DEPARTMENT OF COMMERCE
United States Patent and Trademark Office
Address: COMMISSIONER FOR PATENTS
P.O. Box 1450
Alexandria, Virginia 22313-1450
www.uspto.gov

APPLICATION NO.	ISSUE DATE	PATENT NO.	ATTORNEY DOCKET NO.	CONFIRMATION NO.
10/145,854	06/02/2020	10673758	CINET 01	6398

7590 05/13/2020

Steven J Shattil
P.O. Box 17355
Boulder, CO 80308-0355

ISSUE NOTIFICATION

The projected patent number and issue date are specified above.

Determination of Patent Term Adjustment under 35 U.S.C. 154 (b)
(application filed on or after May 29, 2000)

The Patent Term Adjustment is 5804 day(s). Any patent to issue from the above-identified application will include an indication of the adjustment on the front page.

If a Continued Prosecution Application (CPA) was filed in the above-identified application, the filing date that determines Patent Term Adjustment is the filing date of the most recent CPA.

Applicant will be able to obtain more detailed information by accessing the Patent Application Information Retrieval (PAIR) WEB site (http://pair.uspto.gov).

Any questions regarding the Patent Term Extension or Adjustment determination should be directed to the Office of Patent Legal Administration at (571)-272-7702. Questions relating to issue and publication fee payments should be directed to the Application Assistance Unit (AAU) of the Office of Data Management (ODM) at (571)-272-4200.

APPLICANT(s) (Please see PAIR WEB site http://pair.uspto.gov for additional applicants):

Steve J. Shattil, Boulder, CO;

The United States represents the largest, most dynamic marketplace in the world and is an unparalleled location for business investment, innovation, and commercialization of new technologies. The USA offers tremendous resources and advantages for those who invest and manufacture goods here. Through SelectUSA, our nation works to encourage and facilitate business investment. To learn more about why the USA is the best country in the world to develop technology, manufacture products, and grow your business, visit SelectUSA.gov.

UNITED STATES PATENT AND TRADEMARK OFFICE

UNITED STATES DEPARTMENT OF COMMERCE
United States Patent and Trademark Office
Address: COMMISSIONER FOR PATENTS
P.O. Box 1450
Alexandria, Virginia 22313-1450
www.uspto.gov

APPLICATION NO.	FILING DATE	FIRST NAMED INVENTOR	ATTORNEY DOCKET NO.	CONFIRMATION NO.
10/145,854	05/14/2002	Steve J. Shattil	CINET 01	6398

7590 04/23/2020

Steven J Shattil
P.O. Box 17355
Boulder, CO 80308-0355

EXAMINER
ABELSON, RONALD B

ART UNIT	PAPER NUMBER
2419	

MAIL DATE	DELIVERY MODE
04/23/2020	PAPER

Please find below and/or attached an Office communication concerning this application or proceeding.

The time period for reply, if any, is set in the attached communication.

PTOL-90A (Rev. 04/07)

UNITED STATES PATENT AND TRADEMARK OFFICE

Commissioner for Patents
United States Patent and Trademark Office
P.O. Box 1450
Alexandria, VA 22313-1450
www.uspto.gov

In re application of	:	
Shattil	:	
Application No. 10/145,854	:	NOTICE VACATING PETITION
Filed: May 14, 2002	:	
Attorney Docket No. CINET01	:	

The purpose of this notice is to advise you that the decision automatically granted by Electronic Filing System (EFS) on April 9, 2020, is hereby **VACATED** for the reasons indicated below:

The record discloses the following:

- A Notice of Allowance and Fee(s) Due was mailed on February 25, 2009, which set a Non-Extendable Statutory Period for reply of three (3) months.
- The issue and publication fees were paid on May 28, 2009.
- A Notice of Abandonment was mailed on June 24, 2009, indicating that the application was abandoned for failure to timely pay the issue fee. The issue fee was due, on, or before, Tuesday, May 26, 2009[1].
- On July 15, 2009, a communication was filed request withdrawal of the holding of abandonment, The communication was treated as a petition under 37 CFR 1.181 requesting withdrawal of the holding of abandonment and dismissed by a decision mailed on June 21, 2010.
- On April 9, 2020, a Petition for Revival Of An Application For Patent Abandoned Unintentionally Under 37 CFR 1.137(a) was filed by the Electronic Filing System (EFS) and automatically granted by EFS on April 9, 2020. The petition was accompanied by the petition fee under 37 CFR 1.17(m) of $1,000.00.

Effective December 1, 1997, the provisions of 37 CFR 1.137(b) now provide that where the delay in reply was unintentional, a petition may be filed to revive an abandoned application pursuant to 37 CFR 1.137(a). A grantable petition pursuant to 37 CFR 1.137(a) must, pursuant to 37 CFR 1.137(b), be accompanied by:

> (1) The reply required to the outstanding Office action or notice, unless previously filed;
> (2) The petition fee as set forth in § 1.17(m);
> (3) Any terminal disclaimer (and fee as set forth in § 1.20(d)) required pursuant to paragraph (d) of this section; and
> (4) A statement that the entire delay in filing the required reply from the due date for the reply until the filing of a grantable petition pursuant to this section was unintentional. The

[1] It is noted that Monday, May 25, 2009, was a federal holiday. See 37 CFR 1.6.

> Director may require additional information where there is a question whether the delay was unintentional. The instant petition does not satisfy the requirements of item (3) above.

The petition does not satisfy 37 CFR 1.137(b)(4). Petitioner submitted the required statement of unintentional delay. However, this petition to revive the abandoned application under 37 CFR 1.137(a) was filed more than two years after the date of abandonment.

The USPTO requires additional information concerning whether a delay in seeking the revival of an abandoned application was unintentional where the petition to revive was filed more than two years after the date the application became abandoned. *See Clarification of the Practice for Requiring Additional Information in Petitions Filed in Patent Applications and Patents Based on Unintentional Delay*, 85 FR 12222 (March 2, 2020). Therefore, additional information that provides an explanation of the circumstances surrounding the delay that establishes the entire delay was unintentional is required.

The USPTO is concerned with three periods of delay. Petitioner is reminded the burden of proof to establish that the delay from the due date for the reply until the filing of a grantable petition was unintentional within the meaning of 35 U.S.C. 27 and 37 CFR 1.137 rests with the petitioner. *See* MPEP 711.03(c)(II)(F).

The first period of delay petitioner must address on renewed petition is the delay in filing the reply that originally resulted in the abandonment of this application. Petitioner must explain the delay between when the reply was due and when the reply was filed.

The second period of delay petitioner must address on renewed petition is the delay in filing the initial petition pursuant to 37 CFR 1.137(a). Petitioner must explain why this initial petition was not filed until April 9, 2020.

The third period of delay petitioner must address on renewed petition is the delay in filing a *grantable* petition pursuant to 37 CFR 1.137(a).

When addressing each of these three periods of delay, petitioner is reminded that where the petitioner deliberately permits an application to become abandoned (*e.g.*, due to a conclusion the claims are unpatentable, a rejection in an Office action cannot be overcome, or the invention lacks sufficient commercial value to justify continued prosecution), the abandonment of such application is considered to be a deliberately chosen course of action, and the resulting delay cannot be considered as "unintentional" within the meaning of 37 CFR 1.137. *See In re Application of G*, 11 USPQ2d 1378, 1380 (Comm'r Pat. 1989). Similarly, an intentional course of action is not rendered unintentional when, upon reconsideration, the applicant changes his or her mind as to the course of action that should have been taken. *See In re Maldague*, 10 USPQ2d 1477, 1478 (Comm'r Pat. 1988). Petitioner's failure to carry the burden of proof to establish that the "entire" delay was "unintentional" may lead to the denial of a petition under 37 CFR 1.137, regardless of the circumstances that originally resulted in the abandonment of the application.

Petitioner should note that the party whose delay is relevant is the party having the right or authority to file the response in the above identified application. When the applicant assigns the entire right, title, and interest in an invention to a third party (and thus does not retain any legal or equitable interest in the invention), the applicant's delay is irrelevant in evaluating whether the delay was unintentional. *See Kim v. Quigg*, 718 F. Supp. 1280, 1284, 12 USPQ2d 1604, 1607-08 (E.D. Va. 1989). *See* MPEP

711.03(c)(II)(C)-(F) for additional guidance on the information required to establish that the entire delay was unintentional.

In view of the above, the petition automatically granted by EFS on April 9, 2020, is vacated and the application remains ABANDONED.

A response to this letter must be submitted within TWO (2) MONTHS from the mail date of this decision. Extensions of time under 37 CFR 1.136(a) are permitted. The petition should include a cover letter entitled "Renewed Petition under 37 CFR 1.137(a)." This is not a final agency action within the meaning of 5 U.S.C. § 704.

Further correspondence with respect to this matter should be delivered through one of the following mediums:

By mail: Mail Stop PETITIONS
Commissioner for Patents
Post Office Box 1450
Alexandria, VA 22313-1450

By hand: Customer Service Window
Mail Stop Petitions
Randolph Building
40l Dulany Street
Alexandria, VA 22314

By fax: (571) 273-8300
ATTN: Office of Petitions

By internet: EFS-Web
www.uspto.gov/ebc/efs_help.html
(for help using EFS-Web call the
Patent Electronic Business Center
at (866) 217-9197)

Any questions concerning this matter may be directed to the undersigned at (571) 272-3222.

/KENYA A THORNTON MCLAUGHLIN/
Attorney Advisor, OPET

Doc Code: PET.AUTO Document Description: Petition automatically granted by EFS-Web	PTO/SB/64 U.S. Patent and Trademark Office Department of Commerce

Electronic Petition Request	PETITION FOR REVIVAL OF AN APPLICATION FOR PATENT ABANDONED UNINTENTIONALLY UNDER 37 CFR 1.137(a)
Application Number	10145854
Filing Date	14-May-2002
First Named Inventor	Steve Shattil
Art Unit	2419
Examiner Name	RONALD ABELSON
Attorney Docket Number	CINET 01
Title	CARRIER INTERFEROMETRY NETWORKS

The above-identified application became abandoned for failure to file a timely and proper reply to a notice or action by the United States Patent and Trademark Office. The date of abandonment is the day after the expiration date of the period set for reply in the office notice or action plus any extensions of time actually obtained.

APPLICANT HEREBY PETITIONS FOR REVIVAL OF THIS APPLICATION

NOTE: A grantable petition requires the following items:
(1) Petition fee;
(2) Reply and/or issue fee;
(3) Terminal disclaimer with disclaimer fee – required for all utility and plant applications filed before June 8, 1995; and for all design applications;
(4) Statement that the entire delay was unintentional.

Petition Fee

- (●) Small Entity
- ( ) Micro Entity
- ( ) Regular Undiscounted

Issue Fee and Publication Fee :

Issue Fee and Publication Fee are not due.

☒ Issue Fee Transmittal is attached

Drawing corrections and/ or other deficiencies.

◉ Drawing corrections and/ or other deficiencies are not required

○ I certify, in accordance with 37 CFR 1.4.(d)(4), that drawing corrections and/ or other deficiencies have previously been filed on

○ Drawing corrections and/ or other deficiencies are attached.

☒ STATEMENT: The entire delay in filing the required reply from the due date for the required reply until the filing of a grantable petition under 37 CFR 1.137(a) was unintentional.

THIS PORTION MUST BE COMPLETED BY THE SIGNATORY OR SIGNATORIES

I certify, in accordance with 37 CFR 1.4(d)(4) that I am:

○ An attorney or agent registered to practice before the Patent and Trademark Office who has been given power of attorney in this application.

○ An attorney or agent registered to practice before the Patent and Trademark Office, acting in a representative capacity.

◉ A sole inventor

○ A joint inventor; I certify that I am authorized to sign this submission on behalf of all of the inventors as evidenced by the power of attorney in the application

○ A joint inventor; all of whom are signing this e-petition.

Signature	/Steve Shattil/
Name	Steve Shattil

PART B - FEE(S) TRANSMITTAL

Complete and send this form, together with applicable fee(s), to: Mail **Mail Stop ISSUE FEE**
Commissioner for Patents
P.O. Box 1450
Alexandria, Virginia 22313-1450
or Fax (571)-273-2885

INSTRUCTIONS: This form should be used for transmitting the ISSUE FEE and PUBLICATION FEE (if required). Blocks 1 through 5 should be completed where appropriate. All further correspondence including the Patent, advance orders and notification of maintenance fees will be mailed to the current correspondence address as indicated unless corrected below or directed otherwise in Block 1, by (a) specifying a new correspondence address; and/or (b) indicating a separate "FEE ADDRESS" for maintenance fee notifications.

CURRENT CORRESPONDENCE ADDRESS (Note: Use Block 1 for any change of address)

7590 02/25/2009

Steven J Shattil
P.O. Box 17355
Boulder, CO 80308-0355

Note: A certificate of mailing can only be used for domestic mailings of the Fee(s) Transmittal. This certificate cannot be used for any other accompanying papers. Each additional paper, such as an assignment or formal drawing, must have its own certificate of mailing or transmission.

Certificate of Mailing or Transmission

I hereby certify that this Fee(s) Transmittal is being deposited with the United States Postal Service with sufficient postage for first class mail in an envelope addressed to the Mail Stop ISSUE FEE address above, or being facsimile transmitted to the USPTO (571) 273-2885, on the date indicated below.

Steven J Shattil	(Depositor's name)
/Steven J Shattil/	(Signature)
4/9/2020	(Date)

APPLICATION NO.	FILING DATE	FIRST NAMED INVENTOR	ATTORNEY DOCKET NO.	CONFIRMATION NO.
10/145,854	05/14/2002	Steve J. Shattil	CINET 01	6398

TITLE OF INVENTION: CARRIER INTERFEROMETRY NETWORKS

APPLN. TYPE	SMALL ENTITY	ISSUE FEE DUE	PUBLICATION FEE DUE	PREV. PAID ISSUE FEE	TOTAL FEE(S) DUE	DATE DUE
nonprovisional	YES	$755	$300	$0	$1055	05/26/2009

EXAMINER	ART UNIT	CLASS-SUBCLASS
ABELSON, RONALD B	2419	370-208000

1. Change of correspondence address or indication of "Fee Address" (37 CFR 1.363).

☐ Change of correspondence address (or Change of Correspondence Address form PTO/SB/122) attached.

☐ "Fee Address" indication (or "Fee Address" Indication form PTO/SB/47; Rev 03-02 or more recent) attached. **Use of a Customer Number is required.**

2. For printing on the patent front page, list

(1) the names of up to 3 registered patent attorneys or agents OR, alternatively,

(2) the name of a single firm (having as a member a registered attorney or agent) and the names of up to 2 registered patent attorneys or agents. If no name is listed, no name will be printed.

1 Steven J Shattil
2
3

3. ASSIGNEE NAME AND RESIDENCE DATA TO BE PRINTED ON THE PATENT (print or type)

PLEASE NOTE: Unless an assignee is identified below, no assignee data will appear on the patent. If an assignee is identified below, the document has been filed for recordation as set forth in 37 CFR 3.11. Completion of this form is NOT a substitute for filing an assignment.

(A) NAME OF ASSIGNEE: Genghiscomm Holdings, LLC

(B) RESIDENCE: (CITY and STATE OR COUNTRY): Boulder, CO

Please check the appropriate assignee category or categories (will not be printed on the patent) : ☐ Individual ☒ Corporation or other private group entity ☐ Government

4a. The following fee(s) are submitted:

☒ Issue Fee

☐ Publication Fee (No small entity discount permitted)

☐ Advance Order - # of Copies _____

4b. Payment of Fee(s): **(Please first reapply any previously paid issue fee shown above)**

☐ A check is enclosed.

☒ Payment by credit card. Form PTO-2038 is attached.

☐ The Director is hereby authorized to charge the required fee(s), any deficiency, or credit any overpayment, to Deposit Account Number _____ (enclose an extra copy of this form).

5. **Change in Entity Status** (from status indicated above)

☐ a. Applicant claims SMALL ENTITY status. See 37 CFR 1.27.

☐ b. Applicant is no longer claiming SMALL ENTITY status. See 37 CFR 1.27(g)(2).

NOTE: The Issue Fee and Publication Fee (if required) will not be accepted from anyone other than the applicant; a registered attorney or agent; or the assignee or other party in interest as shown by the records of the United States Patent and Trademark Office.

Authorized Signature /Steven J Shattil/ Date 4/9/2020

Typed or printed name Steven J Shattil Registration No. 40170

This collection of information is required by 37 CFR 1.311. The information is required to obtain or retain a benefit by the public which is to file (and by the USPTO to process) an application. Confidentiality is governed by 35 U.S.C. 122 and 37 CFR 1.14. This collection is estimated to take 12 minutes to complete, including gathering, preparing, and submitting the completed application form to the USPTO. Time will vary depending upon the individual case. Any comments on the amount of time you require to complete this form and/or suggestions for reducing this burden, should be sent to the Chief Information Officer, U.S. Patent and Trademark Office, U.S. Department of Commerce, P.O. Box 1450, Alexandria, Virginia 22313-1450. DO NOT SEND FEES OR COMPLETED FORMS TO THIS ADDRESS. SEND TO: Commissioner for Patents, P.O. Box 1450, Alexandria, Virginia 22313-1450.

Under the Paperwork Reduction Act of 1995, no persons are required to respond to a collection of information unless it displays a valid OMB control number.

Electronic Patent Application Fee Transmittal

Application Number:	10145854
Filing Date:	14-May-2002
Title of Invention:	CARRIER INTERFEROMETRY NETWORKS
First Named Inventor/Applicant Name:	Steve J. Shattil
Filer:	Steven J Shattil
Attorney Docket Number:	CINET 01

Filed as Small Entity

Filing Fees for Utility under 35 USC 111(a)

Description	Fee Code	Quantity	Amount	Sub-Total in USD($)
Basic Filing:				
PET. REVIVE ABANDON APP, DELAY PYMT-RESP	2453	1	1000	1000
Pages:				
Claims:				
Miscellaneous-Filing:				
Petition:				
Patent-Appeals-and-Interference:				
Post-Allowance-and-Post-Issuance:				

Description	Fee Code	Quantity	Amount	Sub-Total in USD($)
Extension-of-Time:				
Miscellaneous:				
			Total in USD ($)	**1000**

UNITED STATES PATENT AND TRADEMARK OFFICE

Commissioner for Patents
United States Patent and Trademark Office
P.O. Box 1450
Alexandria, VA 22313-1450
www.uspto.gov

Decision Date : April 9, 2020

In re Application of :

Steve Shattil

Application No : 10145854

Filed : 14-May-2002

Attorney Docket No : CINET 01

DECISION ON PETITION

UNDER CFR 1.137(a)

This is an electronic decision on the petition under 37 CFR 1.137(a), filed April 9, 2020 , to revive the above-identified application.

The petition is **GRANTED.**

The above-identified application became abandoned for failure to reply in a timely manner to the Notice of Allowance and Issue Fee(s) Due. The date of abandonment is the day after the expiration date of the period set for reply in the Notice.

The electronic petition satisfies the conditions for revival pursuant to the provisions of 37 CFR 1.137(a) in that (1) the reply in the form of payment of the Issue Fee and the Publication Fee (if necessary); (2) the petition fee as set forth in 37 CFR 1.17 (m); (3) the drawing correction and/or other deficiencies (if necessary); and (4) the required statement of unintentional delay have been received. Accordingly, the Issue Fee payment is accepted as having been unintentionally delayed.

Telephone inquiries concerning this decision should be directed to the Patent Electronic Business Center (EBC) at 866-217-9197.

This application file is being directed to the Office of Data Management.

Office of Petitions

Electronic Acknowledgement Receipt

EFS ID:	39116253
Application Number:	10145854
International Application Number:	
Confirmation Number:	6398
Title of Invention:	CARRIER INTERFEROMETRY NETWORKS
First Named Inventor/Applicant Name:	Steve J. Shattil
Correspondence Address:	Steven J Shattil - P.O. Box 17355 - Boulder CO 80308-0355 - - -
Filer:	Steven J Shattil
Filer Authorized By:	
Attorney Docket Number:	CINET 01
Receipt Date:	09-APR-2020
Filing Date:	14-MAY-2002
Time Stamp:	17:23:40
Application Type:	Utility under 35 USC 111(a)

Payment information:

Submitted with Payment	yes
Payment Type	CARD
Payment was successfully received in RAM	$1000

RAM confirmation Number	E202049H23352162
Deposit Account	
Authorized User	

The Director of the USPTO is hereby authorized to charge indicated fees and credit any overpayment as follows:

File Listing:

Document Number	Document Description	File Name	File Size(Bytes)/ Message Digest	Multi Part /.zip	Pages (if appl.)
1	Petition automatically granted by EFS	petition-request.pdf	31476 1d731b43aa4e6cda58cd531bcb49d977fdd1b8aa	no	2
Warnings:					
Information:					
2	Issue Fee Payment (PTO-85B)	10145854_B85.pdf	90779 abfef89288fbf8a109bbe4ae919d94c9eca205ae	no	1
Warnings:					
Information:					
3	Fee Worksheet (SB06)	fee-info.pdf	29833 2e5a718cdf605ea10f55a596a30edffecf7c0fe0	no	2
Warnings:					
Information:					
			Total Files Size (in bytes):	152088	

This Acknowledgement Receipt evidences receipt on the noted date by the USPTO of the indicated documents, characterized by the applicant, and including page counts, where applicable. It serves as evidence of receipt similar to a Post Card, as described in MPEP 503.

New Applications Under 35 U.S.C. 111
If a new application is being filed and the application includes the necessary components for a filing date (see 37 CFR 1.53(b)-(d) and MPEP 506), a Filing Receipt (37 CFR 1.54) will be issued in due course and the date shown on this Acknowledgement Receipt will establish the filing date of the application.
National Stage of an International Application under 35 U.S.C. 371
If a timely submission to enter the national stage of an international application is compliant with the conditions of 35 U.S.C. 371 and other applicable requirements a Form PCT/DO/EO/903 indicating acceptance of the application as a national stage submission under 35 U.S.C. 371 will be issued in addition to the Filing Receipt, in due course.
New International Application Filed with the USPTO as a Receiving Office
If a new international application is being filed and the international application includes the necessary components for an international filing date (see PCT Article 11 and MPEP 1810), a Notification of the International Application Number and of the International Filing Date (Form PCT/RO/105) will be issued in due course, subject to prescriptions concerning national security, and the date shown on this Acknowledgement Receipt will establish the international filing date of the application.

UNITED STATES PATENT AND TRADEMARK OFFICE

Commissioner for Patents
United States Patent and Trademark Office
P.O. Box 1450
Alexandria, VA 22313-1450
www.uspto.gov

STEVEN J SHATTIL
P.O. BOX 17355
BOULDER CO 80308-0355

MAILED

JUN 2 1 2010

OFFICE OF PETITIONS

In re Application of	:	
Shattil, Steve J.	:	
Application No. 10/145,854	:	ON PETITION
Filed: May 14, 2002	:	
Attorney Docket No. CINET 01	:	

This is a decision on the petition, filed July 15, 2009, which is being treated as a petition under 37 CFR 1.181, requesting withdrawal of the holding of abandonment in the above-identified application.

The petition is **DISMISSED**.

This application was held abandoned for failure to timely respond to the Notice of Allowance, mailed February 25, 2009, which set a three (3) month statutory period for reply. Accordingly, a reply was due on or before May 26, 2009. A Notice of Abandonment was mailed June 24, 2009.

A response was received by the USPTO on May 28, 2009. Petitioner contends that the reply was timely since it was mailed via Express Mail in accordance with 37 CFR 1.10 on May 26, 2009. As stated in 37 CFR 1.10(a), any correspondence received by the USPTO that was delivered by the "Express Mail Post Office to Addressee" service of the United States Postal Service (USPS) will be considered filed with the USPTO on the date of deposit with the USPS.

After further review of the instant petition, it does not appear the reply received on May 28, 2009 was mailed via the USPS Express Mail service, but rather, the USPS Priority Mail service. Both the USPS Postal Service Delivery Confirmation Receipt and the USPS Track & Confirm receipt provided by petitioner reflect Priority Mail service. In order for the reply to be considered filed on the date of deposit with the USPS as discussed in 37 CFR 1.10, the Express Mail service must be utilized.

Accordingly, as the reply received on May 28, 2009 was after the period for reply set forth in the Notice of Allowance, the instant application was properly abandoned.

ALTERNATIVE VENUE

Petitioner is strongly encouraged to consider filing a petition under 37 CFR 1.137(b) to revive an unintentionally abandoned application instead of filing a renewed petition under 37 CFR 1.181.

A grantable petition pursuant to 37 CFR 1.137(b) must be accompanied by:

(1) The reply required to the outstanding Office action, unless previously filed;

(2) The petition fee as set forth in 37 CFR 1.17(m), **$810.00 for a small entity**;

(3) A statement that the entire delay in filing the required reply from the due date for the reply until the filing of a grantable petition was unintentional. The Director may require additional information where there is a question whether the delay was unintentional.

Further correspondence with respect to this matter should be addressed as follows:

By mail: Mail Stop PETITIONS
Commissioner for Patents
Post Office Box 1450
Alexandria, VA 22313-1450

By hand: Customer Window located at:

U.S. Patent and Trademark Office
Customer Service Window Randolph Building
401 Dulany Street
Alexandria, VA 22314

By fax: (571) 273-8300
ATTN: Office of Petitions

Any questions concerning this matter may be directed to the undersigned at (571) 272-3206.

Liana Walsh
Petitions Examiner
Office of Petitions

OIPE IAP9
JUL 1 5 2009
PATENT & TRADEMARK OFFICE

Petition Under 37 CFR 1.181(a) to Withdraw Holding of Abandonment

Commissioner of Patents
Mail Stop Petition
PO Box 1450
Alexandria, Virginia 22313-1450

Appn. Number: 10/145,854
Filing Date: 05/14/2002
Examiner: Ronald Abelson
G.A.U.: 2616
Atty. Docket No. CINET 01

Mailed 2009, July 10

Dear Sir:

In response to the Notice of Abandonment mailed on 06/24/2008, Applicant submits herewith a Petition to the Director under 37 CFR 1.181(a) to withdraw the holding of abandonment in view of Rule § 1.10 Filing of correspondence by "Express Mail," Section (a) of the Appendix R Patent Rules of the Manual of Patent Examining Procedure.

Samsung Exhibit 1138, Page 33 of 38
Samsung Electronics Co., Ltd. et al. v. Genghiscomm Holdings LLC
IPR2025-00789

1. The Notice of Abandonment mailed on 06/24/2009 states that the application was abandoned in view of Applicant's failure to timely pay the required issue fee and publication fee within the statutory period of three months from the mailing date of the Notice of Allowance.
2. The Notice of Abandonment shows that the issue fee and publication fee were received in the USPTO on 05/28/2009.
3. The Notice of Allowance mailed on 02/25/2009 set a due date of 05/26/2009.
4. Applicant mailed the issue fee and publication fee by United States Postal Service Express Mail with Delivery Confirmation on the due date of 05/26/2009, as required by § 1.10 Filing of correspondence by "Express Mail," Section (a), Paragraph (1) of the Appendix R Patent Rules of the Manual of Patent Examining Procedure:

   (1) Any correspondence received by the U.S. Patent and Trademark Office (USPTO) that was delivered by the "Express Mail Post Office to Addressee" service of the United States Postal Service (USPS) will be considered filed with the USPTO on the date of deposit with the USPS.

5. The Date of Deposit with the USPS is shown by official USPS notation (a postmarked USPS Delivery Confirmation receipt included herewith) on the due date of 05/26/2009, as required by § 1.10 Filing of correspondence by "Express Mail," Section (a), Paragraph (2) of the Appendix R Patent Rules of the Manual of Patent Examining Procedure:

   (2) The date of deposit with USPS is shown by the "date in" on the "Express Mail" label or other official USPS notation.

6. The Applicant requests that the Director review the timeliness of Applicant's payment of the issue fee and publication fee in view of Rule § 1.10 Filing of correspondence by "Express Mail."

7. The Applicant requests that the Director accord Applicant's payment of the issue fee and publication fee a payment date of 05/26/2009, in accordance with Section (a) of Rule § 1.10 Filing of correspondence by "Express Mail."

Samsung Exhibit 1138, Page 34 of 38
Samsung Electronics Co., Ltd. et al. v. Genghiscomm Holdings LLC
IPR2025-00789

8. The Applicant requests that the Director withdraw the holding of abandonment of Applicant's patent application.

Yours Respectfully,

Steve J. Shattil
P.O. Box 17355
Boulder, CO 80308-0355
(720) 234-4351

Samsung Exhibit 1138, Page 35 of 38
Samsung Electronics Co., Ltd. et al. v. Genghiscomm Holdings LLC
IPR2025-00789

U.S. Postal Service™ Delivery Confirmation™ Receipt

DELIVERY CONFIRMATION NUMBER: 0304 1400 0000 1724 4969

Postage and Delivery Confirmation fees must be paid before mailing.

Article Sent To: (to be completed by mailer)

Mail Stop Issue Fee

(Please Print Clearly)

C1NET01

22313-1450

Postmark Here

POSTAL CUSTOMER:
Keep this receipt. For inquiries: Access Internet web site at *www.usps.com*® or call 1-800-222-1811

CHECK ONE (POSTAL USE ONLY)

- [x] Priority Mail™ Service
- [ ] First-Class Mail® parcel
- [ ] Package Services parcel

PS Form 152, May 2002 (See Reverse)

Track & Confirm

Search Results

Label/Receipt Number: **0308 1400 0000 1728 4969**
Class: **Priority Mail®**
Service(s): **Delivery Confirmation™**
Status: **Delivered**

Your item was delivered at 12:20 PM on May 28, 2009 in ALEXANDRIA, VA 22313.

Detailed Results:

- **Delivered, May 28, 2009, 12:20 pm, ALEXANDRIA, VA 22313**
- **Arrival at Unit, May 28, 2009, 11:39 am, ALEXANDRIA, VA 22301**
- **Processed through Sort Facility, May 28, 2009, 3:47 am, ZIP Code 20199**
- **Acceptance, May 26, 2009, 5:46 pm, BOULDER, CO 80301**

Track & Confirm

Enter Label/Receipt Number.

Go >

Notification Options

Track & Confirm by email

Get current event information or updates for your item sent to you or others by email. Go >

Copyright© 2009 USPS. All Rights Reserved. No FEAR Act EEO Data FOIA

UNITED STATES PATENT AND TRADEMARK OFFICE

UNITED STATES DEPARTMENT OF COMMERCE
United States Patent and Trademark Office
Address: COMMISSIONER FOR PATENTS
P.O. Box 1450
Alexandria, Virginia 22313-1450
www.uspto.gov

APPLICATION NO.	FILING DATE	FIRST NAMED INVENTOR	ATTORNEY DOCKET NO.	CONFIRMATION NO.
10/145,854	05/14/2002	Steve J. Shattil	CINET 01	6398

7590 06/24/2009

Steven J Shattil
P.O. Box 17355
Boulder, CO 80308-0355

EXAMINER
ABELSON, RONALD B

ART UNIT	PAPER NUMBER
2419	

MAIL DATE	DELIVERY MODE
06/24/2009	PAPER

Notice of Abandonment

This application is abandoned in view of:

1. ☐ The applicant's failure to timely file a proper reply to the Office letter mailed on _____.
   (a) ☐ A reply was received on _____ (with a Certificate of Mailing or Transmission date _____), which is after the expiration of the period for reply (including a total extension of ____ month(s)) which expired on _____.
   (b) ☐ A proposed reply was received on _____, but it does not constitute a proper reply under 37 CFR 1.113(a) to the final rejection. (A proper reply under 37 CFR 1.113 to a final rejection consists only of:
   (1) a timely filed amendment which places the application in condition for allowance;
   (2) a timely filed Notice of Appeal (with appeal fee);
   (3) a timely filed Request for Continued Examination (RCE) in compliance with 37 CFR 1.114).
   (c) ☐ A reply was received on _____ but it does not constitute a proper reply, or a bona fide attempt at a proper reply, to the non final rejection. See 37 CFR 1.85(a) and 1.111. (See explanation in box e below).
   (d) ☐ No reply has been received.
2. ☒ Applicant's failure to timely pay the required issue fee and publication fee, if applicable, within the statutory period of three months from the mailing date of the Notice of Allowance (PTOL-85).
   (a) ☒ The issue fee and publication fee, if applicable, was received on 5/28/09 (with a Certificate of Mailing or Transmission date _____), which is after the expiration of the statutory period for payment of the issue fee (and publication fee) set in the Notice of Allowance (PTOL-85).
   (b) ☐ The submitted fee of $_____ is insufficient. A balance of $_____ is due.
   The issue fee required by 37 CFR 1.18 is $_____.
   The publication fee, if required by 37 CFR 1.18(d) , is $_____.
   (c) ☐ The issue fee and publication fee, if applicable, has not been recieved.
3. ☐ Applicant's failure to timely file corrected drawings as required by, and within the three-month period set in, the Notice of Allowability (PTO-37).
   (a) ☐ Proposed corrected drawings were received on _____ (with a Certificate of Mailing or Trasmission dated _____), which is after the expiration of the period for reply.
   (b) ☐ No corrected drawing have been received.
4. ☐ The letter of express abandonment which is signed by the attorney or agent of record, the assignee of the entire interest, or all of the applicants.
5. ☐ The letter of express abandonment which is signed by an attorney or agent (acting in a representative capacity under 37 CFR 1.34(a)) upon the filling of a continuing application.
6. ☐ The decision by the Board of Patent Appeals and Interference rendered on _____ and because the period for seeking court review of the decision has expired and there are no allowed claims.
7. ☐ The reason(s) below:

Petitions to revive under 37 CFR 1.137(a) or (b), or request to withdraw the holding of abandonment under 37 CFR 1.181, should be promptly filed to minimize any negative effects on patent term.

Telephone inquiries should be directed to the Office of Data Management at (571) 272-4200.

Patent Publication Branch
Office of Data Management