US009800448B1

(12) **United States Patent**
Shattil

(10) **Patent No.: US 9,800,448 B1**
(45) **Date of Patent: Oct. 24, 2017**

(54) **SPREADING AND PRECODING IN OFDM**

(71) Applicant: **Genghiscomm Holdings, LLC**, Boulder, CO (US)

(72) Inventor: **Steve Shattil**, Cheyenne, WY (US)

(73) Assignee: **Genghiscomm Holdings, LLC**, Boulder, CO (US)

(*) Notice: Subject to any disclaimer, the term of this patent is extended or adjusted under 35 U.S.C. 154(b) by 0 days.

(21) Appl. No.: **15/489,664**

(22) Filed: **Apr. 17, 2017**

Related U.S. Application Data

(60) Continuation of application No. 15/149,382, filed on May 9, 2016, now Pat. No. 9,628,231, which is a (Continued)

(51) **Int. Cl.**

H04L 27/26	(2006.01)
H04B 7/024	(2017.01)
H04J 13/12	(2011.01)
H04B 7/026	(2017.01)
H04B 7/0452	(2017.01)
H04B 7/06	(2006.01)
H04J 11/00	(2006.01)
H04L 5/00	(2006.01)
H04J 13/00	(2011.01)

(52) **U.S. Cl.**
CPC ***H04L 27/2628*** (2013.01); ***H04B 7/024*** (2013.01); ***H04B 7/026*** (2013.01); ***H04B 7/0452*** (2013.01); ***H04B 7/0617*** (2013.01); ***H04B 7/0697*** (2013.01); ***H04J 11/0093*** (2013.01); ***H04J 13/0003*** (2013.01); ***H04J 13/12*** (2013.01); ***H04L 5/0007*** (2013.01)

(58) **Field of Classification Search**
None
See application file for complete search history.

(56) **References Cited**

U.S. PATENT DOCUMENTS

4,164,714	A	8/1979	Swanson
4,471,399	A	9/1984	Udren

(Continued)

FOREIGN PATENT DOCUMENTS

JP	H08331093	12/1996
WO	0237771	5/2002

OTHER PUBLICATIONS

Non-Final Office Action dated Apr. 7, 2006 from corresponding U.S. Appl. No. 10/131,163.

(Continued)

Primary Examiner — Diane Lo
(74) *Attorney, Agent, or Firm* — Steven J Shattil

(57) **ABSTRACT**

An OFDM transmitter spreads original data symbols with a complex-valued spreading matrix derived from a discrete Fourier transform. Spread data symbols are mapped to OFDM subcarriers. Spreading and mapping are configured to produce a transmitted spread-OFDM signal with a low peak-to-average power ratio (PAPR) and orthogonal code spaces. In MIMO systems, the complex-valued spreading matrix can comprise a MIMO precoding matrix, and the code spaces can comprise MIMO subspaces. In Cooperative-MIMO, a combination of low code-space cross correlation and low PAPR can be achieved.

24 Claims, 14 Drawing Sheets

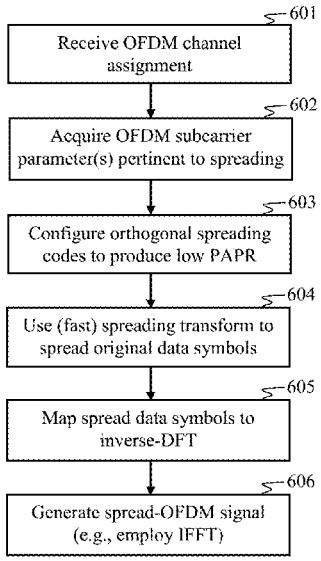

Related U.S. Application Data

continuation-in-part of application No. 14/727,769, filed on Jun. 1, 2015, which is a continuation of application No. 14/276,309, filed on May 13, 2014, now Pat. No. 9,048,897, which is a continuation of application No. 12/545,572, filed on Aug. 21, 2009, now Pat. No. 8,750,264, which is a division of application No. 11/187,107, filed on Jul. 22, 2005, now Pat. No. 8,670,390, which is a continuation-in-part of application No. 10/145,854, filed on May 14, 2002, now abandoned.

(60) Provisional application No. 60/598,187, filed on Aug. 2, 2004.

(56) **References Cited**

U.S. PATENT DOCUMENTS

4,479,226 A 10/1984 Prabhu et al.
4,550,402 A 10/1985 Gable et al.
4,590,511 A 5/1986 Bocchi et al.
4,628,517 A 12/1986 Scwarz et al.
4,700,341 A 10/1987 Huang
4,827,480 A 5/1989 Kowalski
4,912,422 A 3/1990 Kobayashi et al.
4,943,973 A 7/1990 Werner
5,003,545 A 3/1991 Kowalski
5,016,242 A 5/1991 Tang
5,093,863 A 3/1992 Galand et al.
5,125,100 A 6/1992 Katznelson
5,191,459 A 3/1993 Thompson et al.
5,249,201 A 9/1993 Posner et al.
5,282,222 A 1/1994 Fattouche et al.
5,309,514 A 5/1994 Johnson et al.
5,406,551 A 4/1995 Saito et al.
5,410,538 A 4/1995 Roche et al.
5,412,648 A 5/1995 Fan
5,425,049 A 6/1995 Dent et al.
5,457,557 A 10/1995 Zarem et al.
5,463,376 A 10/1995 Stoffer
5,491,727 A 2/1996 Petit
5,504,783 A 4/1996 Tomisato et al.
5,519,692 A 5/1996 Hershey et al.
5,521,937 A 5/1996 Kondo et al.
5,528,581 A 6/1996 De Bot
5,533,012 A 7/1996 Fukasawa et al.
5,543,806 A 8/1996 Wilkinson
5,548,582 A 8/1996 Brajal et al.
5,555,268 A 9/1996 Fattouche et al.
5,563,906 A 10/1996 Hershey et al.
5,579,304 A 11/1996 Sugimoto et al.
5,612,978 A 3/1997 Blanchard et al.
5,630,154 A 5/1997 Bolstad et al.
5,640,698 A 6/1997 Shen et al.
5,691,832 A 11/1997 Liedenbaum et al.
5,694,393 A 12/1997 Kaye
5,704,013 A 12/1997 Watari et al.
5,712,716 A 1/1998 Vanoli et al.
5,765,097 A 6/1998 Dail
5,790,516 A 8/1998 Gudmundson et al.
5,793,413 A 8/1998 Hylton et al.
5,793,759 A 8/1998 Rakib et al.
5,815,801 A 9/1998 Hamalainen et al.
5,818,619 A 10/1998 Medved et al.
5,822,368 A 10/1998 Wang
5,828,658 A 10/1998 Ottersten et al.
5,831,977 A 11/1998 Dent
5,838,268 A 11/1998 Frenkel et al.
5,844,951 A 12/1998 Proakis et al.
5,862,189 A 1/1999 Huisken et al.
5,931,893 A 8/1999 Dent et al.
5,940,196 A 8/1999 Piehler et al.
5,940,379 A 8/1999 Startup et al.
5,943,332 A 8/1999 Liu et al.
5,955,983 A 9/1999 Li
5,955,992 A 9/1999 Shattil
5,960,032 A 9/1999 Letaief et al.
5,991,334 A 11/1999 Papadopoulos et al.
6,008,760 A 12/1999 Shattil
6,018,317 A 1/2000 Dogan et al.
6,047,190 A 4/2000 Haleem et al.
6,055,432 A 4/2000 Haleem et al.
6,058,105 A 5/2000 Hochwald
6,075,812 A 6/2000 Cafarella et al.
6,084,871 A 7/2000 Engstrom et al.
6,088,351 A 7/2000 Jenkin et al.
6,091,967 A 7/2000 Kruys et al.
6,097,712 A 8/2000 Secord et al.
6,097,773 A 8/2000 Carter et al.
6,107,954 A 8/2000 Li
6,122,295 A 9/2000 Kato et al.
6,128,276 A 10/2000 Agee
6,128,350 A 10/2000 Shastri et al.
6,130,918 A 10/2000 Humphrey et al.
6,141,393 A 10/2000 Thomas et al.
RE36,944 E 11/2000 Li
6,144,711 A 11/2000 Raleigh et al.
6,154,443 A 11/2000 Huang et al.
6,175,550 B1 1/2001 van Nee
6,175,551 B1 1/2001 Awater et al.
6,178,158 B1 1/2001 Suzuki et al.
6,188,717 B1 2/2001 Kaiser et al.
6,192,068 B1 2/2001 Fattouche et al.
6,208,295 B1 3/2001 Dogan et al.
6,211,671 B1 4/2001 Shattil
6,215,983 B1 4/2001 Dogan et al.
6,233,248 B1 5/2001 Sautter et al.
6,236,642 B1 5/2001 Shaffer et al.
6,240,129 B1 5/2001 Reusens et al.
6,243,565 B1 6/2001 Smith et al.
6,243,581 B1 6/2001 Jawanda
6,252,909 B1 6/2001 Tzannes et al.
6,266,702 B1 7/2001 Darnell et al.
6,282,167 B1 8/2001 Michon et al.
6,292,473 B1 9/2001 Duske et al.
6,301,221 B1 10/2001 Paterson
6,307,892 B1 10/2001 Jones et al.
6,310,704 B1 10/2001 Dogan et al.
6,320,897 B1 11/2001 Fattouche et al.
6,331,837 B1 12/2001 Shattil
6,351,499 B1 2/2002 Paulraj et al.
6,359,923 B1 3/2002 Agee et al.
6,377,566 B1 4/2002 Cupo et al.
6,389,034 B1 5/2002 Guo et al.
6,405,147 B1 6/2002 Fera
6,421,528 B1 7/2002 Rosen et al.
6,434,390 B2 8/2002 Rahman
6,438,173 B1 8/2002 Stantchev et al.
6,442,130 B1 8/2002 Jones, IV et al.
6,442,193 B1 8/2002 Hirsch
6,442,222 B1 8/2002 Ghazi-Moghadam et al.
6,452,981 B1 9/2002 Raleigh et al.
6,459,740 B1 10/2002 Lo
6,463,295 B1 10/2002 Yun
6,470,055 B1 10/2002 Feher
6,473,393 B1 10/2002 Ariyavisitakul et al.
6,473,418 B1 10/2002 Laroia et al.
6,496,290 B1 12/2002 Lee
6,504,862 B1 1/2003 Yang et al.
6,507,319 B2 1/2003 Sikina
6,510,133 B1 1/2003 Uesugi
6,512,737 B1 1/2003 Agee
6,526,105 B1 2/2003 Harikumar et al.
6,532,224 B1 3/2003 Dailey
6,549,581 B1 4/2003 Izumi et al.
6,563,881 B1 5/2003 Sakoda et al.
6,567,482 B1 5/2003 Popovic
6,567,982 B1 5/2003 Howe et al.
6,570,913 B1 5/2003 Chen
6,603,827 B2 8/2003 Bottomley et al.
6,606,351 B1 8/2003 Dapper et al.
6,631,175 B2 10/2003 Harikumar et al.
6,636,495 B1 10/2003 Tangemann
6,650,645 B2 11/2003 Scott et al.

(56) **References Cited**

U.S. PATENT DOCUMENTS

6,654,408 B1 11/2003 Kadous et al.
6,654,719 B1 11/2003 Papadias
6,662,024 B2 12/2003 Walton et al.
6,665,521 B1 12/2003 Gorday et al.
6,667,714 B1 12/2003 Solondz
6,674,810 B1 1/2004 Cheng
6,674,999 B2 1/2004 Ramachandran
6,678,318 B1 1/2004 Lai
6,686,879 B2 2/2004 Shattil
6,687,511 B2 2/2004 McGowan et al.
6,693,984 B1 2/2004 Andre et al.
6,694,154 B1 2/2004 Molnar et al.
6,704,794 B1 3/2004 Kejriwal et al.
6,717,908 B2 4/2004 Vijayan et al.
6,728,295 B1 4/2004 Nallanathan et al.
6,747,946 B1 6/2004 Kaneko et al.
6,751,187 B2 6/2004 Walton et al.
6,757,344 B2 6/2004 Carleton et al.
6,760,373 B2 7/2004 Gross et al.
6,778,514 B1 8/2004 Boccussi et al.
6,785,513 B1 8/2004 Sivaprakasam
6,813,485 B2 11/2004 Sorrells et al.
6,832,251 B1 12/2004 Gelvin et al.
6,850,481 B2 2/2005 Wu et al.
6,859,506 B1 2/2005 McCorkle
6,859,641 B2 2/2005 Collins et al.
6,907,270 B1 6/2005 Blanz
6,928,047 B1 8/2005 Xia
6,944,168 B2 9/2005 Paatela et al.
6,980,768 B2 12/2005 Arend et al.
6,982,968 B1 1/2006 Barratt et al.
6,985,533 B2 1/2006 Attallah et al.
6,996,076 B1 2/2006 Forbes et al.
7,010,015 B2 3/2006 Hervey
7,010,048 B1 3/2006 Shattil
7,020,110 B2 3/2006 Walton et al.
7,031,309 B1 4/2006 Sautter et al.
7,031,371 B1 4/2006 Lakkis
7,035,661 B1 4/2006 Yun
7,057,555 B2 6/2006 Lewis
7,075,999 B2 7/2006 Redfern
7,076,168 B1 7/2006 Shattil
7,082,153 B2 7/2006 Balachandran et al.
7,099,268 B2 8/2006 Ichihara et al.
7,139,321 B2 11/2006 Giannakis et al.
7,149,211 B2 12/2006 Bennett et al.
7,154,936 B2 12/2006 Bjerke et al.
7,155,255 B2 12/2006 Blum et al.
7,158,504 B2 1/2007 Kadaba et al.
7,194,766 B2 3/2007 Noehring et al.
7,197,084 B2 3/2007 Ketchum et al.
7,263,133 B1 8/2007 Miao
7,283,799 B2 10/2007 Shattil
7,286,604 B2 10/2007 Shattil
7,295,509 B2 11/2007 Laroia et al.
7,376,074 B2 5/2008 Jung et al.
7,391,804 B2 6/2008 Shattil
7,406,261 B2 7/2008 Shattil
7,418,043 B2 8/2008 Shattil
7,430,257 B1 9/2008 Shattil
7,508,798 B2 3/2009 Tong et al.
7,570,956 B2 8/2009 Bigham et al.
7,594,010 B2 9/2009 Dohler et al.
7,606,137 B2 10/2009 Shattil
7,787,514 B2 8/2010 Shattil
7,801,247 B2 9/2010 Onggosanusi et al.
7,907,588 B2 3/2011 Schaepperle et al.
8,102,907 B2 1/2012 Kim
8,107,965 B2 1/2012 Hui et al.
8,301,139 B2 10/2012 Lotze et al.
8,320,301 B2 11/2012 Walton et al.
8,363,739 B2 1/2013 Ma et al.
8,391,913 B2 3/2013 Zimmer et al.
8,396,153 B1 3/2013 Shen et al.
8,416,837 B2 4/2013 Wu et al.
8,472,335 B2 6/2013 De Pasquale et al.
8,498,647 B2 7/2013 Gorokhov et al.
8,526,400 B2 9/2013 Tong et al.
8,780,830 B2 7/2014 Doppler et al.
9,025,684 B2 5/2015 Jeong et al.
9,026,790 B2 5/2015 Bolton et al.
9,042,468 B2 5/2015 Barbu et al.
9,130,810 B2 9/2015 Laroia et al.
9,485,063 B2 11/2016 Shattil
2002/0009096 A1 1/2002 Odenwalder
2002/0034191 A1 3/2002 Shattil
2002/0044524 A1 4/2002 Laroia et al.
2002/0051433 A1 5/2002 Affes et al.
2002/0061068 A1 5/2002 Leva et al.
2002/0118727 A1 8/2002 Kim et al.
2002/0118781 A1 8/2002 Thomas et al.
2002/0127978 A1 9/2002 Khatri
2002/0137472 A1 9/2002 Quinn et al.
2002/0168016 A1 11/2002 Wang et al.
2002/0172184 A1 11/2002 Kim et al.
2002/0181509 A1 12/2002 Mody et al.
2002/0196733 A1 12/2002 Shen et al.
2003/0026222 A1 2/2003 Kotzin
2003/0072380 A1 4/2003 Huang
2003/0086363 A1 5/2003 Hernandez
2003/0128658 A1 7/2003 Walton et al.
2003/0133469 A1 7/2003 Brockmann et al.
2003/0154262 A1 8/2003 Kaiser et al.
2003/0169824 A1 9/2003 Chayat
2003/0206527 A1 11/2003 Yim
2004/0013101 A1 1/2004 Akin et al.
2004/0017824 A1 1/2004 Koenck
2004/0047405 A1 3/2004 Boesel et al.
2004/0057501 A1 3/2004 Balachandran et al.
2004/0085919 A1 5/2004 Song et al.
2004/0086027 A1 5/2004 Shattil
2004/0100897 A1 5/2004 Shattil
2004/0141548 A1 7/2004 Shattil
2004/0151109 A1 8/2004 Batra et al.
2004/0223476 A1 11/2004 Jose et al.
2004/0243258 A1 12/2004 Shattil
2005/0058098 A1 3/2005 Klein et al.
2005/0078742 A1 4/2005 Cairns et al.
2005/0198199 A1 9/2005 Dowling
2005/0265275 A1 12/2005 Howard et al.
2005/0270968 A1* 12/2005 Feng H04L 27/2621 370/208
2005/0286476 A1 12/2005 Crosswy et al.
2006/0023803 A1 2/2006 Perlman et al.
2007/0041311 A1 2/2007 Baum et al.
2007/0078924 A1 4/2007 Hassan et al.
2007/0140102 A1 6/2007 Oh et al.
2008/0151743 A1 6/2008 Tong et al.
2008/0310484 A1 12/2008 Shattil
2009/0156252 A1 6/2009 Harris
2010/0056200 A1 3/2010 Tolonen
2010/0080112 A1 4/2010 Bertrand et al.
2010/0091919 A1* 4/2010 Xu H04L 1/0025 375/346
2010/0098042 A1 4/2010 Dent
2010/0185541 A1 7/2010 Hassan et al.
2010/0254484 A1 10/2010 Hamaguchi et al.
2010/0254497 A1 10/2010 To et al.
2011/0041021 A1 2/2011 Khoshnevis et al.
2011/0228878 A1 9/2011 Sorrentino
2012/0087393 A1 4/2012 Jeong et al.
2012/0252387 A1 10/2012 Haskins et al.
2012/0269285 A1 10/2012 Jeong et al.
2013/0077508 A1 3/2013 Axmon et al.
2013/0142275 A1 6/2013 Baik et al.
2013/0315211 A1 11/2013 Balan et al.
2014/0086186 A1 3/2014 Hamaguchi et al.
2015/0103723 A1 4/2015 Kim et al.
2016/0006594 A1 1/2016 Persson et al.
2017/0126458 A1 5/2017 Shattil

OTHER PUBLICATIONS

(56) **References Cited**

OTHER PUBLICATIONS

Non-Final Office Action dated Oct. 16, 2006 from corresponding U.S. Appl. No. 10/131,163.
Notice of Allowance dated May 7, 2008 from corresponding U.S. Appl. No. 10/131,163.
Non-Final Office Action dated Oct. 24, 2008 from corresponding U.S. Appl. No. 11/621,014.
Notice of Allowance dated Apr. 30, 2009 from corresponding U.S. Appl. No. 11/621,014.
Notice of Allowance dated Feb. 22, 2011 from corresponding U.S. Appl. No. 12/328,917.
Non-Final Office Action dated Nov. 2, 2012 from corresponding U.S. Appl. No. 13/116,984.
Final Office Action dated Nov. 14, 2013 from corresponding U.S. Appl. No. 13/116,984.
Non-Final Office Action dated Mar. 25, 2014 from corresponding U.S. Appl. No. 13/116,984.
Final Office Action dated Oct. 1, 2014 from corresponding U.S. Appl. No. 13/116,984.
Non-Final Office Action dated Jul. 31, 2015 from corresponding U.S. Appl. No. 13/116,984.
Final Office Action dated Nov. 18, 2015 from corresponding U.S. Appl. No. 13/116,984.
Non-Final Office Action dated Mar. 10, 2016 from corresponding U.S. Appl. No. 13/116,984.
Final Office Action dated Jul. 1, 2016 from corresponding U.S. Appl. No. 13/116,984.
Notice of Allowance dated Sep. 12, 2016 from corresponding U.S. Appl. No. 13/116,984.
Non-Final Office Action dated Apr. 27, 2006 from corresponding U.S. Appl. No. 10/145,854.
Non-Final Office Action dated Nov. 27, 2006 from corresponding U.S. Appl. No. 10/145,854.
Non-Final Office Action dated Apr. 9, 2007 from corresponding U.S. Appl. No. 10/145,854.
Non-Final Office Action dated Sep. 9, 2008 from corresponding U.S. Appl. No. 10/145,854.
Notice of Allowance dated Feb. 25, 2009 from corresponding U.S. Appl. No. 10/145,854.
Non-Final Office Action dated Apr. 8, 2008 from corresponding U.S. Appl. No. 11/187,107.
Final Office Action dated Feb. 25, 2009 from corresponding U.S. Appl. No. 11/187,107.
Non-Final Office Action dated Nov. 2, 2009 from corresponding U.S. Appl. No. 11/187,107.
Non-Final Office Action dated May 25, 2010 from corresponding U.S. Appl. No. 11/187,107.
Non-Final Office Action dated Oct. 18, 2010 from corresponding U.S. Appl. No. 11/187,107.
Non-Final Office Action dated Mar. 30, 2011 from corresponding U.S. Appl. No. 11/187,107.
Non-Final Office Action dated Jan. 4, 2012 from corresponding U.S. Appl. No. 11/187,107.
Non-Final Office Action dated Oct. 4, 2012 from corresponding U.S. Appl. No. 11/187,107.
Non-Final Office Action dated Jul. 25, 2013 from corresponding U.S. Appl. No. 11/187,107.
Notice of Allowance dated Nov. 20, 2013 from corresponding U.S. Appl. No. 11/187,107.
Non-Final Office Action dated Oct. 14, 2011 from corresponding U.S. Appl. No. 12/545,572.
Final Office Action dated Feb. 28, 2012 from corresponding U.S. Appl. No. 12/545,572.
Non-Final Office Action dated Oct. 5, 2012 from corresponding U.S. Appl. No. 12/545,572.
Non-Final Office Action dated Jun. 6, 2013 from corresponding U.S. Appl. No. 12/545,572.
Final Office Action dated Jan. 2, 2014 from corresponding U.S. Appl. No. 12/545,572.
Notice of Allowance dated Apr. 14, 2014 from corresponding U.S. Appl. No. 12/545,572.
Notice of Allowance dated Apr. 9, 2015 from corresponding U.S. Appl. No. 14/276,309.
Notice of Allowance dated Apr. 9, 2015 from corresponding U.S. Appl. No. 14/275,161.
Non-Final Office Action dated Nov. 10, 2014 from corresponding U.S. Appl. No. 14/511,585.
Non-Final Office Action dated Jan. 21, 2015 from corresponding U.S. Appl. No. 14/511,585.
Notice of Allowance dated May 12, 2015 from corresponding U.S. Appl. No. 14/511,585.
Non-Final Office Action dated Oct. 20, 2016 from corresponding U.S. Appl. No. 14/727,769.
Non-Final Office Action dated Jul. 7, 2016 from corresponding U.S. Appl. No. 15/149,382.
Final Office Action dated Oct. 24, 2016 from corresponding U.S. Appl. No. 15/149,382.
Notice of Allowance dated Feb. 16, 2017 from corresponding U.S. Appl. No. 15/149,382.
Notice of Allowance dated Mar. 17, 2017 from corresponding U.S. Appl. No. 15/149,382.
Non-Final Office Action dated Aug. 5, 2016 from corresponding U.S. Appl. No. 14/967,633.
Notice of Allowance dated Sep. 13, 2016 from corresponding U.S. Appl. No. 14/967,633.
Final Office Action dated May 4, 2017 from corresponding U.S. Appl. No. 14/727,769.
Guillaud et al. "Full-rate full-diversity space-frequency coding for MIMO OFDM systems." Proc. IEEE Benelux Signal Processing Symp. 2002.
ITU-T G.992.1, "Asymmetric Digital Subscriber Line (ADSL) transceivers" Jun. 1999, (G.dmt).
D. Wiegandt et al., "Overcoming peak-to-average power ratio issues in OFDM via carrier-interferometry codes", VTC 2001 Fall. IEEE VTS 54th Vehicular Technology Conference, 2001, vol. 2, pp. 660-663, Oct. 7-11, 2001.
B. Natarajan, et al. "Crest factor considerations in MC-CDMA with carrier interferometry codes", PACRIM. 2001 IEEE Communications Pacific Rim Conference on Computers and signal Processing, 2001, vol. 2, pp. 445-448 Aug. 26-28, 2001.
V. Weerackody, "Diversity for the Direct-Sequence Spread-Spectrum System Using Multiple Transmit Antennas", IEEE 1993, pp. 1775-1779, May 23, 1993.
W. Xu, et al. "On the Performance of Multicarrier RAKE Systems", IEEE 1997, pp. 295-299, Mar. 11, 1997.
J.P. Linnartz, "Synchronous MC-CDMA in Dispersive Mobile Rayleigh Channels," Proc. 2.sup.nd IEEE Benelux Sig. Proc. Symposium, Hilvarenbeek, Mar. 23, 2000.
N. Yee, et al., "Controlled Equalization of Multi-Carrier CDMA in an Indoor Rician Fading Channel," IEICE Trans. on Comm., Japan, vol. E77-B, No. 7, Jul. 1994.
N. Yee, et al., "Wiener Filtering of Multi-Carrier CDMA in a Rayleigh Fading Channel," IEEE/ICCC PIMRC Conference, Hague, vol. 4, pp. 1344-1347 Sep. 19-23, 1994.
L.L. Yang, et al., "Blind Joint Soft-Detection Assisted Slow Frequency-Hopping Multicarrier DS-CDMA," IEEE Trans. Comm., vol. 48, No. 9, Sep. 2000.
S. Hara, et al., "Overview of Multicarrier CDMA," IEEE Communications Mag., vol. 35, Issue 12, pp. 126-133, Dec. 1997.
P. Frenger, et al., "A Parallel Combinatory OFDM System," IEEE Trans. Comm., vol. 47, No. 04, Apr. 1999.
G.J. Saulnier, et al., "Performance of an OFDM Spread Spectrum Communication System Using Lapped Transforms," MILCOM 97 Proceedings, 1997, vol. 2, pp. 608-612.
K. Chang, et al., "Wavelet-based multi-carrier CDMA for personal communications systems," Acoustics, Speech, and Signal Processing, 1996. ICASSP-96. Conference Proceedings, 1996 IEEE International Conference on (vol. 3) pp. 1443-1446, May 7-10, 1996.
N. Yee, et al., "Multicarrier Code Division Multiple Access (MC-CDMA): A New Spreading Technique for Comm. Over Multipath Channels," Final Report for Micro Project 93-101. Mar. 1995.

(56) **References Cited**

OTHER PUBLICATIONS

W. Xu, L.B. Milstein, "Performance of Multicarrier DS CDMA Systems in the Presence of Correlated Fading," Vehicular Technology Conference, 1988, IEEE 38th, vol. 3: pp. 2050-2054, Jun. 1997.
E. Sourour, M. Nakagawa, "Performance of Orthogonal Multicarrier CDMA in a Multipath Fading Channel," IEEE Trans. Comm., vol. 44, No. 3, Mar. 1996.
J.A.C. Bingham, "Multicarrier Modulation for Data Transmission: An Idea Whose Time has Come," IEEE Communications Mag., vol. 28, Issue 5, pp. 5-14 May 1990.
B.S. Slimane, "MC-CDMA With Quadrature Spreading Over Frequency Selective Fading Channels," Global Telecommunications Conference, 1997, GLOBECOM '97, IEEE, vol. 1, pp. 315-319, 1997.
C. Zhang, "Non-Continuous Carrier-Interferometry Codes," Signal Design and Its Application in Communications, 2009. IWSDA '09. Fourth International Workshop, pp. 134-137. Oct. 19-23, 2009.
W. Seo, et al., "Comparative Study of OFDM System with Carrier Interferometry Code and STBC in Flat Fading Channels," Advanced Comm. Tech., 2004. The 6th International Conference on, vol. 1, pp. 376-379, 2004.
H. Okamoto, et al., "A New Concept of Clipping Without Spectrum Broadening to Carrier Interferometry OFDM System," IEEE Industrial, Electrical and Electronic GCC, Manama, Bahrain, pp. 1-6, Mar. 2008.
Shattil, S.; Nassar, C.R., "Array Control System for Multicarrier Protocols Using a Frequency-Shifted Feedback Cavity," Radio and Wireless Conference, 1999. RAWCON 99. IEEE, pp. 215-218, Aug. 1-4, 1999.
N. Suehiro, "Asynchronous SSMA System Using Secret Polyphase Orthogonal Sequences With Elimination Filter for Co-Channel Interference," IEEE International Conference on Systems Engineering, pp. 119-122, Sep. 17-19, 1992.
T. Kirmoto, et al., "Orthogonal Periodic Sequences Derived From M-sequences on GF(q)," IEEE Military Communications Conference, vol. 2, pp. 779-783, Nov. 4-7, 1991.
C.R. Nassar et al., "High-Performance Broadband DS-CDMA via Carrier Interferometry Chip Shaping," 2000 Int'l Symposium on Advanced Radio Technologies, Boulder, CO, Sep. 6-8, 2000.
J.P.M.G. Linnartz and A. Gorokhov, "New equalization approach for OFDM over dispersive and rapidly time varying channel," PIMRC '00, London, Sep. 2000.
Z. Ye; et al. "Anti-jam, anti-multipath spread spectrum OFDM system," Signals, Systems & Computers, 1998. Conference Record of the Thirty-Second Asilomar Conference on, Year: 1998, vol. 2, pp. 1793-1797, 1998.
Y. Tang and M.G. Valenti, "Coded transmit macrodiversity: Block space-time codes over distributed antennas," in Proc. IEEE Vehicular Tech. Conf (VTC), Rhodes, Greece, May 2001, pp. 1435-1438.
G. Barriac, et al. Distributed Beamforming for Information Transfer in Sensor Networks, Apr. 26-27, 2004, Berkeley, CA, ACM 1-58113-6/04/0004.
C.R. Nassar, B. Natarajan, S. Shattil, "Introduction of carrier interference to spread spectrum multiple access," Wireless Communications and Systems, 1999 Emerging Technologies Symposium Apr. 12-13, 1999 pp. 4.1-4.5.
S. Hara, "Overview of multicarrier CDMA," Communications Magazine, IEEE; vol. 35, Issue 12, Dec. 1997, pp. 126-133.
B. Natarajan, C.R. Nassar, S. Shattil, M. Michelini, and Z. Wu; "High-Performance MC-CDMA Via Carrier Interferometry Codes," Vehicular Technology, IEEE Transactions on; vol. 50, Issue 6, Nov. 2001, pp. 1344-1353.
Z. Wu, B. Natarajan, C.R. Nassar, S. Shattil; "High-performance, high-capacity MC-CDMA via carrier interferometry," Personal, Indoor and Mobile Radio Communications, 2001 12th IEEE International Symposium on; vol. 2, Sep. 30-Oct. 3, 2001 pp. G-11-G-16.
S.A. Zekavat, C.R. Nassar, S. Shattil; "The merger of a single oscillating-beam smart antenna and MC-CDMA: transmit diversity, frequency diversity and directionality," Broadband Communications for the Internet Era Symposium digest, 2001 IEEE Emerging Technologies Symposium on Sep. 10-11, 2001 pp. 107-112.
B. Natarajan, C.R. Nassar, S. Shattil; "Enhanced Bluetooth and IEEE 802.11 (FH) via multi-carrier implementation of the physical layer," Broadband Communications for the Internet Era Symposium digest, 2001 IEEE Emerging Technologies Symposium on; Sep. 10-11, 2001 pp. 129-133.
Z. Wu; C.R. Nassar, S. Shattil; "Ultra wideband DS-CDMA via innovations in chip shaping," Vehicular Technology Conference, 2001. VTC 2001 Fall. IEEE VTS 54th; vol. 4, Oct. 7-11, 2001 pp. 2470-2474.
B. Natarajan, C.R. Nassar, S. Shattil; "Innovative pulse shaping for high-performance wireless TDMA," Communications Letters, IEEE vol. 5, Issue 9, Sep. 2001 pp. 372-374.
B.Natarajan, C.R. Nassar and S.Shattil; "Throughput Enhancement in TDMA through Carrier Interference Pulse Shaping," IEEE Vehicular technology Conference Proceedings, vol. 4, Fall 2000, Boston, Sep. 24-28, 2000, pp. 1799-1803.
K. Vincent, N. Lau; "On the Analysis of Peak-to-Average Ratio (PAR) for IS95 and CDMA2000 Systems," IEEE Trans. Vehicular Tech., vol. 49, No. 6, Nov. 2000, pp. 2174-2188.
J.Y. Baudais, J.F. Helard, J. Citerne; "An improved linear MMSE detection technique for multi-carrier CDMA system: Comparison and combination with interference cancelation schemes," European Transactions on Telecommunications, Wiley, 2000, 11 (7), pp. 547-554.
T. Salzer, D. Mottier, L. Brunel; "Influence of System Load on Channel Estimation in MC-CDMA Mobile Radio Communication Systems," Vehicular Technology Conference, 2001, VTC 2001 Spring. IEEE VTS 53rd vol. 1, May 5-9, 2001, pp. 522-526.
H. Steendam, M. Moeneclaey; "The Effect of Carrier Phase Jitter on MC-CDMA Performance," Communications, IEEE Transactions on Year: 1999, vol. 47, Issue: 2, Feb. 1999, pp. 195-198.
S. Kaiser and P. Hoeher, "Performance of multi-carrier CDMA systems with channel estimation in two dimensions," in Proc. 8th IEEE International Symposium on Personal, Indoor and Mobile Radio Communications (PIMRC), Helsinki, Finnland, Sep. 1997, pp. 115-119.
J.F Helard, J.Y. Baudais, J. Citeme; "Linear MMSE detection technique for MC-CDMA," Electronics Letters, Institution of Engineering and Technology, 2000, 36 (7), Mar. 30, 2000, pp. 665-666.
J.S. Chow, J.M. Cloth, J.A.C. Bingham; "Equalizer Training Algorithms for Multicarrier Modulation Systems," Communications, 1993. ICC '93 Geneva. Technical Program, Conference Record, IEEE International Conference on; vol. 2, May 23-26, 1993, pp. 761-765.
LTE: Evolved Universal Terrestrial Radio Access (E-UTRA); Physical channels and modulation (3GPP TS 36.211 version 8.7.0 Release 8), Jun. 2009.
LTE: Evolved Universal Terrestrial Radio Access (E-UTRA); Multiplexing and channel coding (3GPP TS 36.212 version 8.8.0 Release 8), Jan. 2010.
Artés et al. "Fast iterative decoding of linear dispersion codes for unknown mimo channels." Signals, Systems and Computers, 2002. Conference Record of the Thirty-Sixth Asilomar Conference on. vol. 1. IEEE, 2002.
Fischer et al. "Space-time transmission using Tomlinson-Harashima precoding." ITG Fachbericht (2002): 139-148.
Vrcelj et al. "Pre-and post-processing for optimal noise reduction in cyclic prefix based channel equalizers." Communications, 2002. ICC 2002. IEEE International Conference on. vol. 1. IEEE, 2002.
Non-Final Office Action dated Jun. 21, 2017 from corresponding U.S. Appl. No. 15/295,271.

* cited by examiner

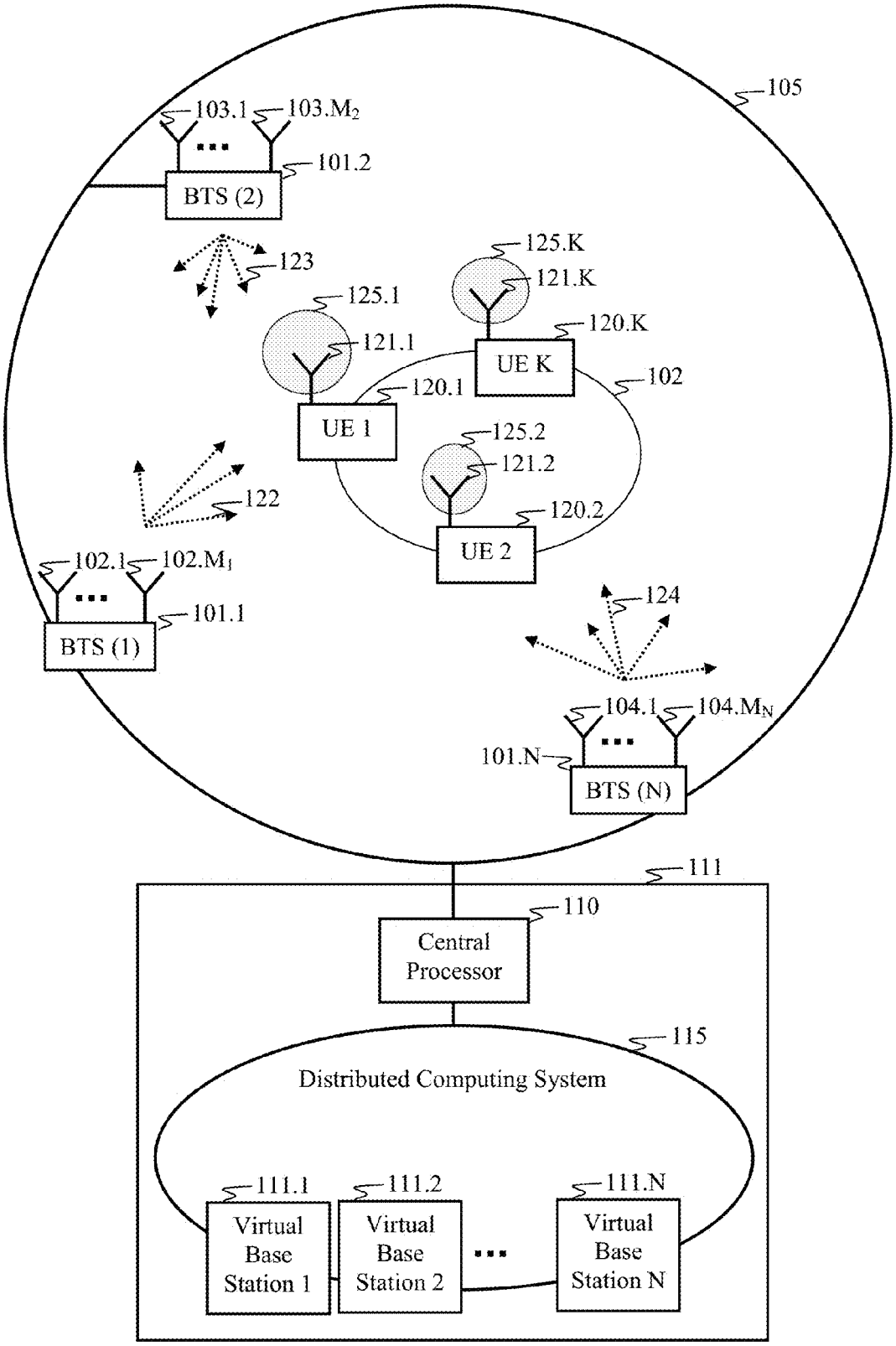
105
103.1
103.M2
101.2
BTS (2)
123
125.K
121.K
125.1
120.K
121.1
UE K
102
120.1
UE 1
125.2
121.2
122
120.2
UE 2
102.1
102.M1
101.1
BTS (1)
124
104.1
104.MN
101.N
BTS (N)
111
110
Central Processor
115
Distributed Computing System
111.1
111.2
111.N
Virtual Base Station 1
Virtual Base Station 2
Virtual Base Station N

Figure 1

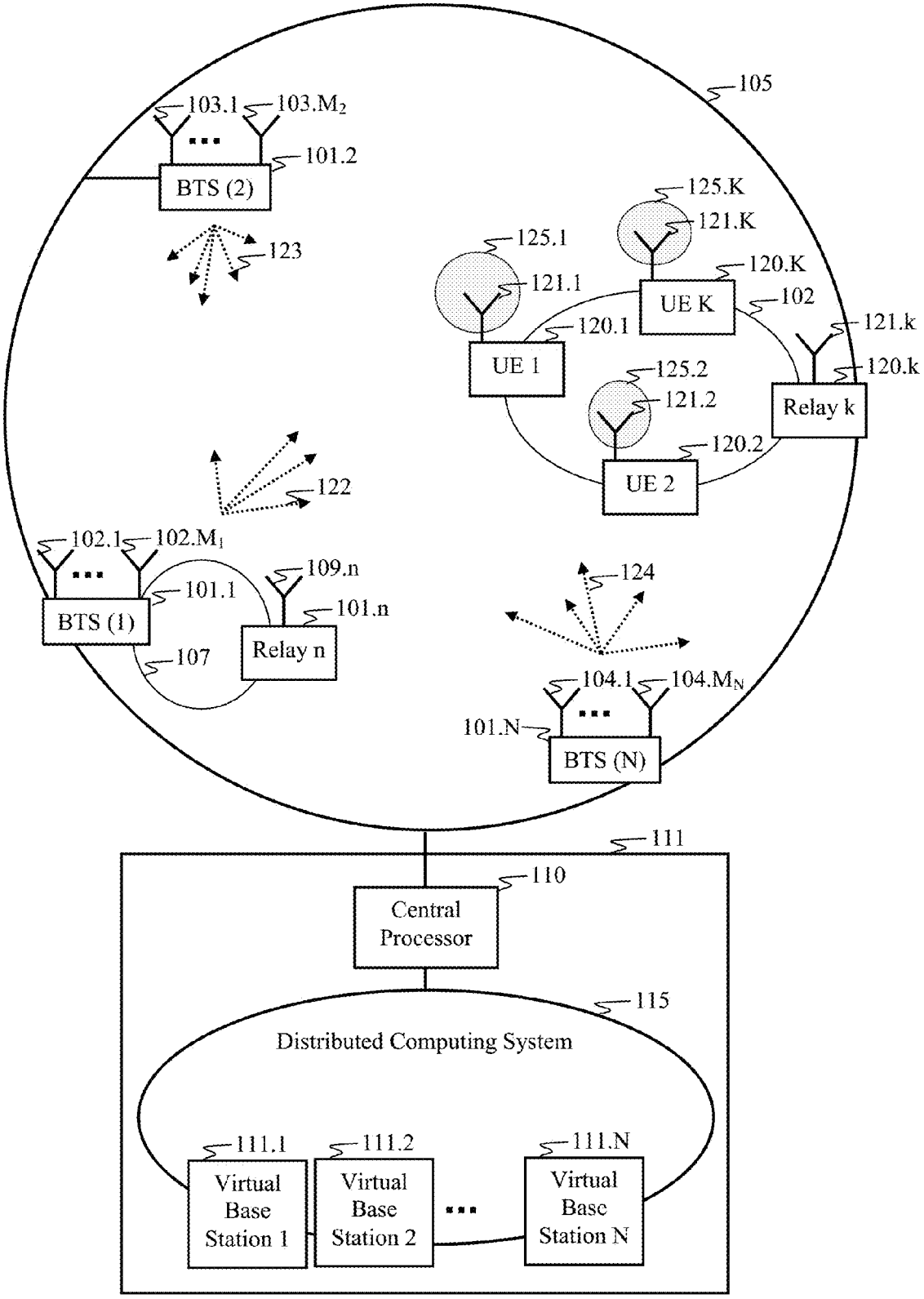
105
103.1
103.M2
101.2
BTS (2)
123
125.K
121.K
125.1
121.1
120.K
UE K
102
120.1
121.k
UE 1
125.2
120.k
121.2
Relay k
120.2
UE 2
122
102.1
102.M1
109.n
101.1
BTS (1)
101.n
Relay n
107
124
104.1
104.MN
101.N
BTS (N)
111
110
Central Processor
115
Distributed Computing System
111.1
111.2
111.N
Virtual Base Station 1
Virtual Base Station 2
Virtual Base Station N

Figure 2

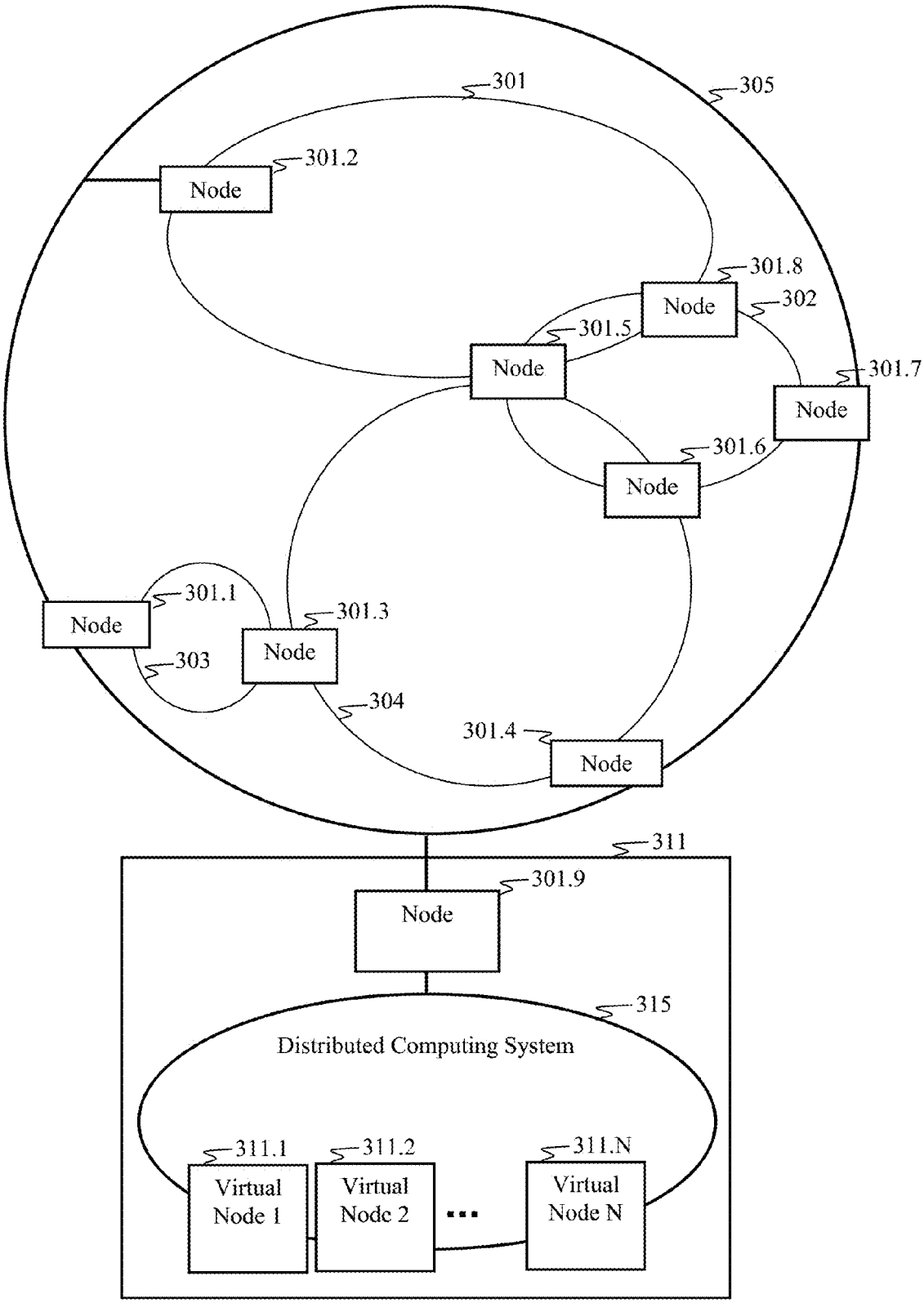
301
305
301.2
Node
301.8
Node
302
301.5
Node
301.7
Node
301.6
Node
301.1
Node
301.3
Node
303
304
301.4
Node
311
301.9
Node
315
Distributed Computing System
311.1
Virtual Node 1
311.2
Virtual Node 2
...
311.N
Virtual Node N

Figure 3

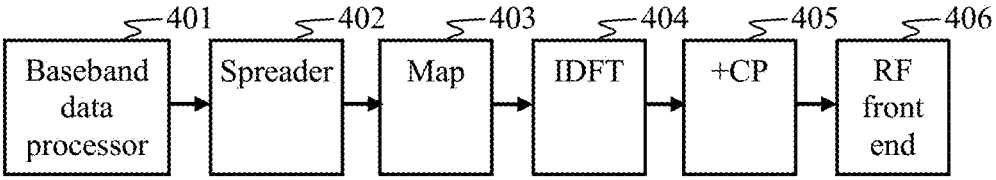

Figure 4A

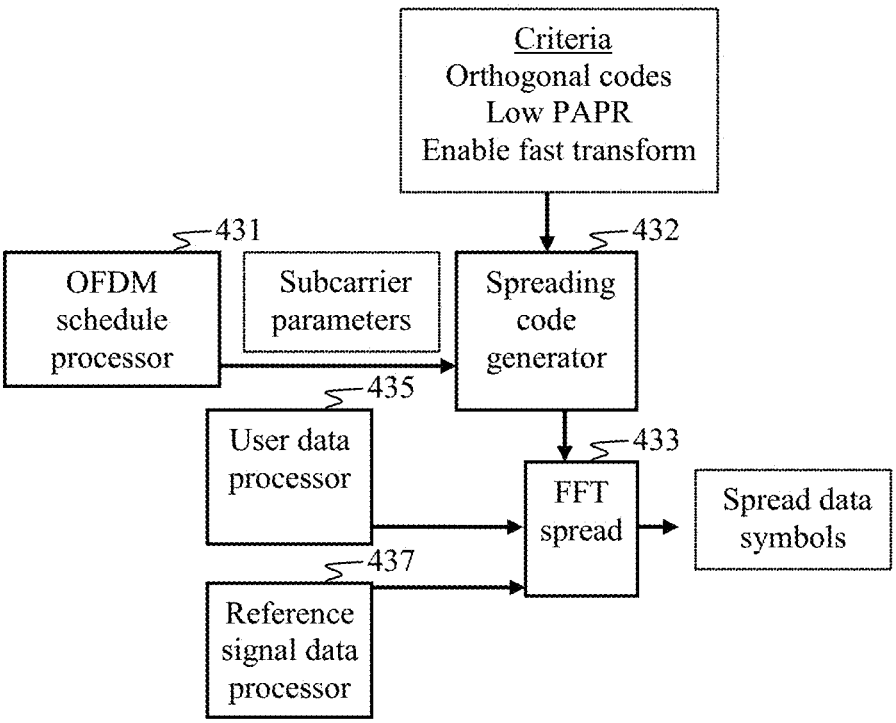

Figure 4B

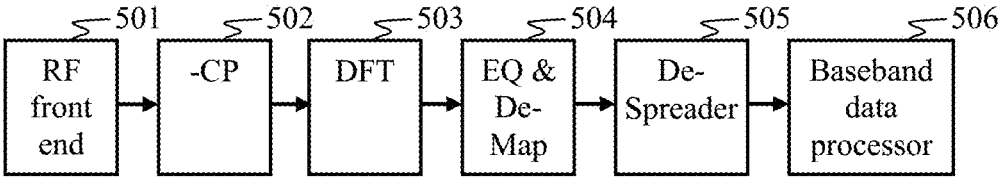

Figure 5A

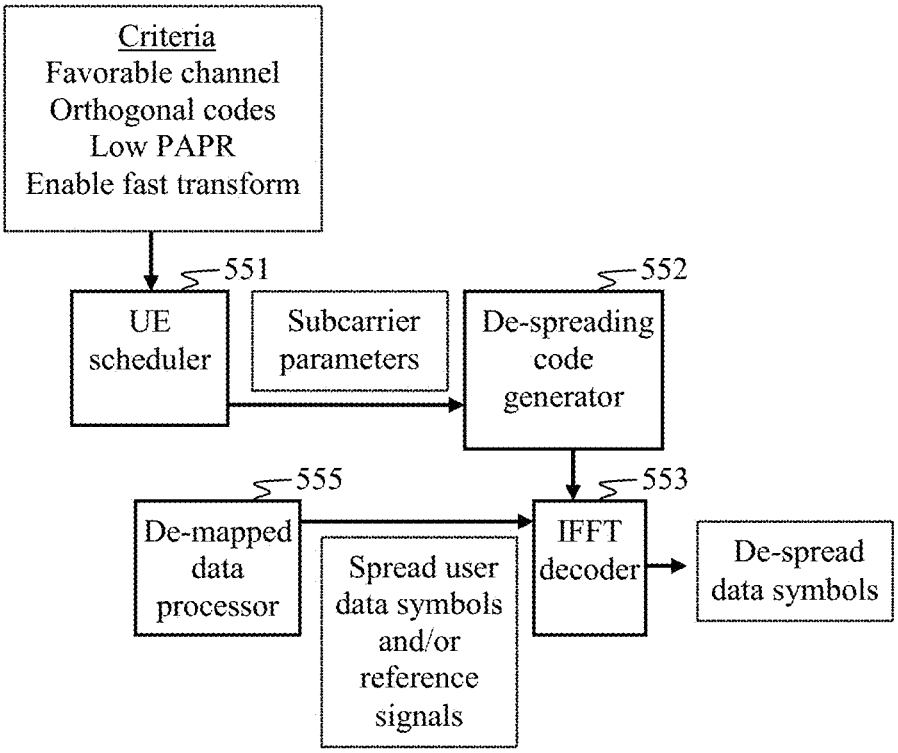

Figure 5B

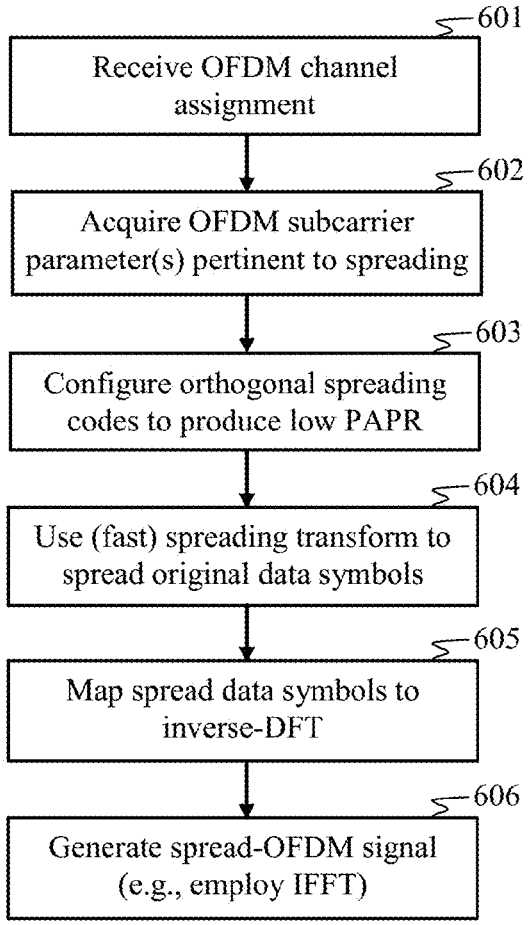

Figure 6A

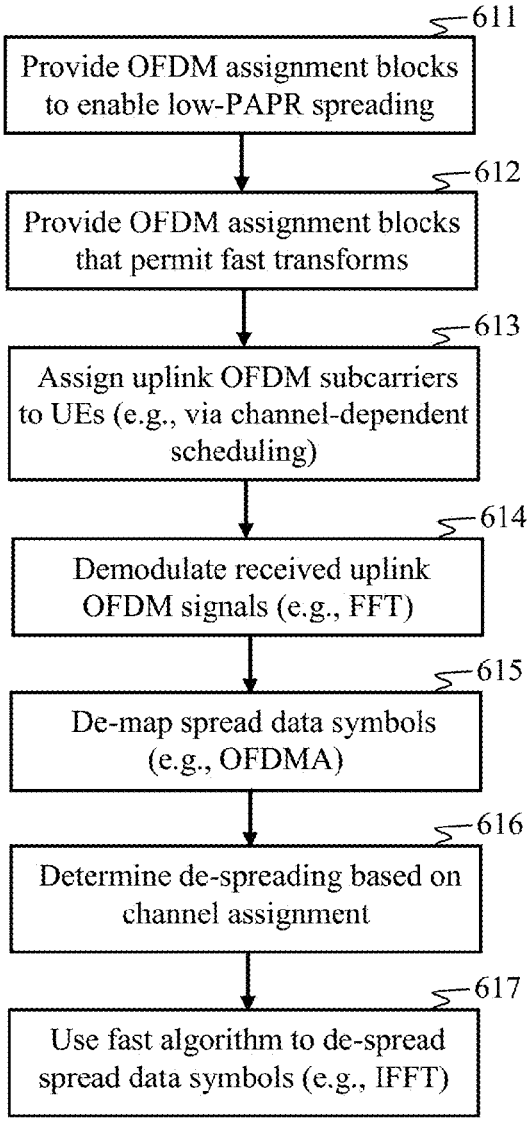

Figure 6B

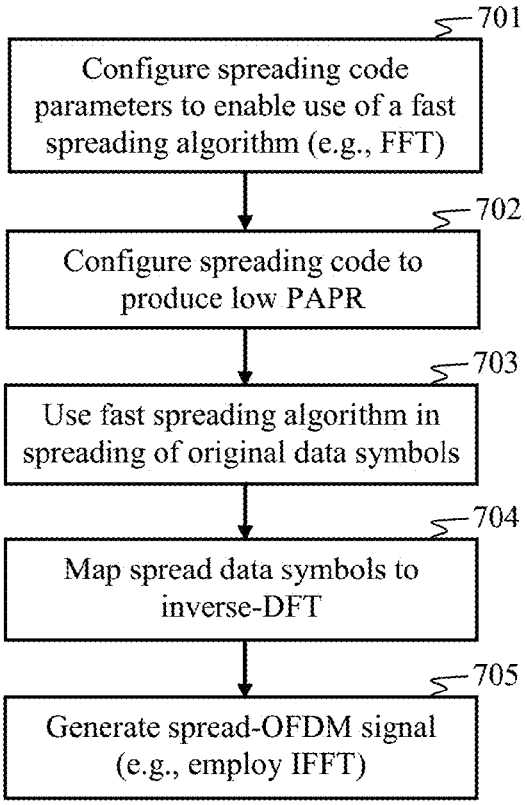

Figure 7A

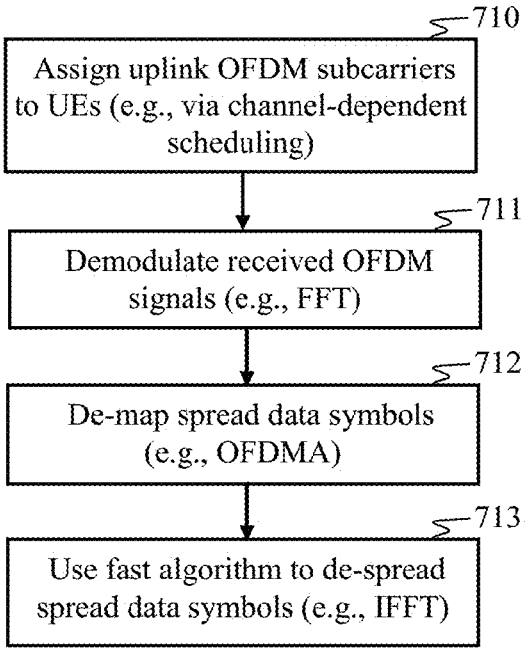

Figure 7B

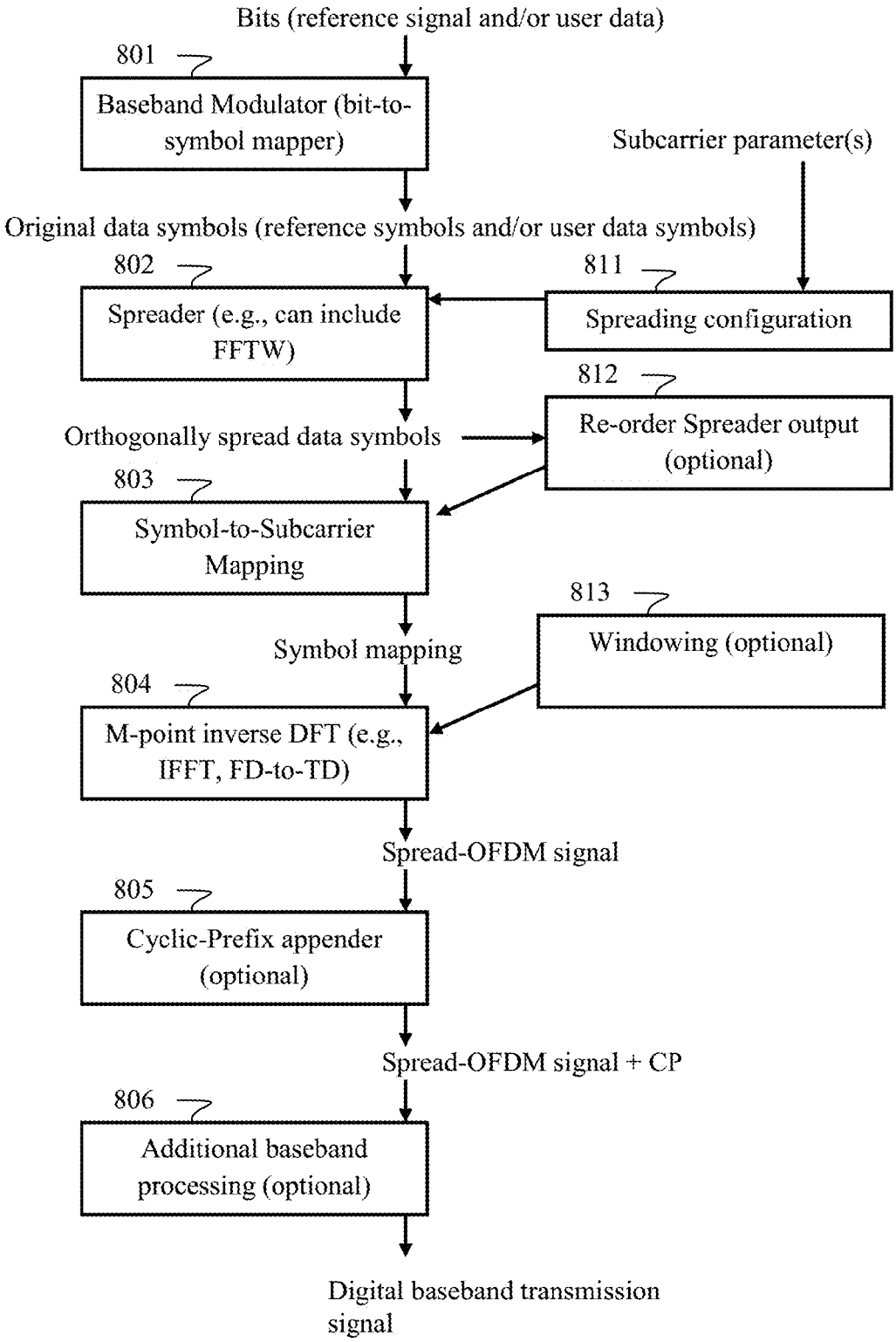
Bits (reference signal and/or user data)
801
Baseband Modulator (bit-to-symbol mapper)
Subcarrier parameter(s)
Original data symbols (reference symbols and/or user data symbols)
802
Spreader (e.g., can include FFTW)
811
Spreading configuration
812
Re-order Spreader output (optional)
Orthogonally spread data symbols
803
Symbol-to-Subcarrier Mapping
813
Windowing (optional)
Symbol mapping
804
M-point inverse DFT (e.g., IFFT, FD-to-TD)
Spread-OFDM signal
805
Cyclic-Prefix appender (optional)
Spread-OFDM signal + CP
806
Additional baseband processing (optional)
Digital baseband transmission signal

Figure 8A

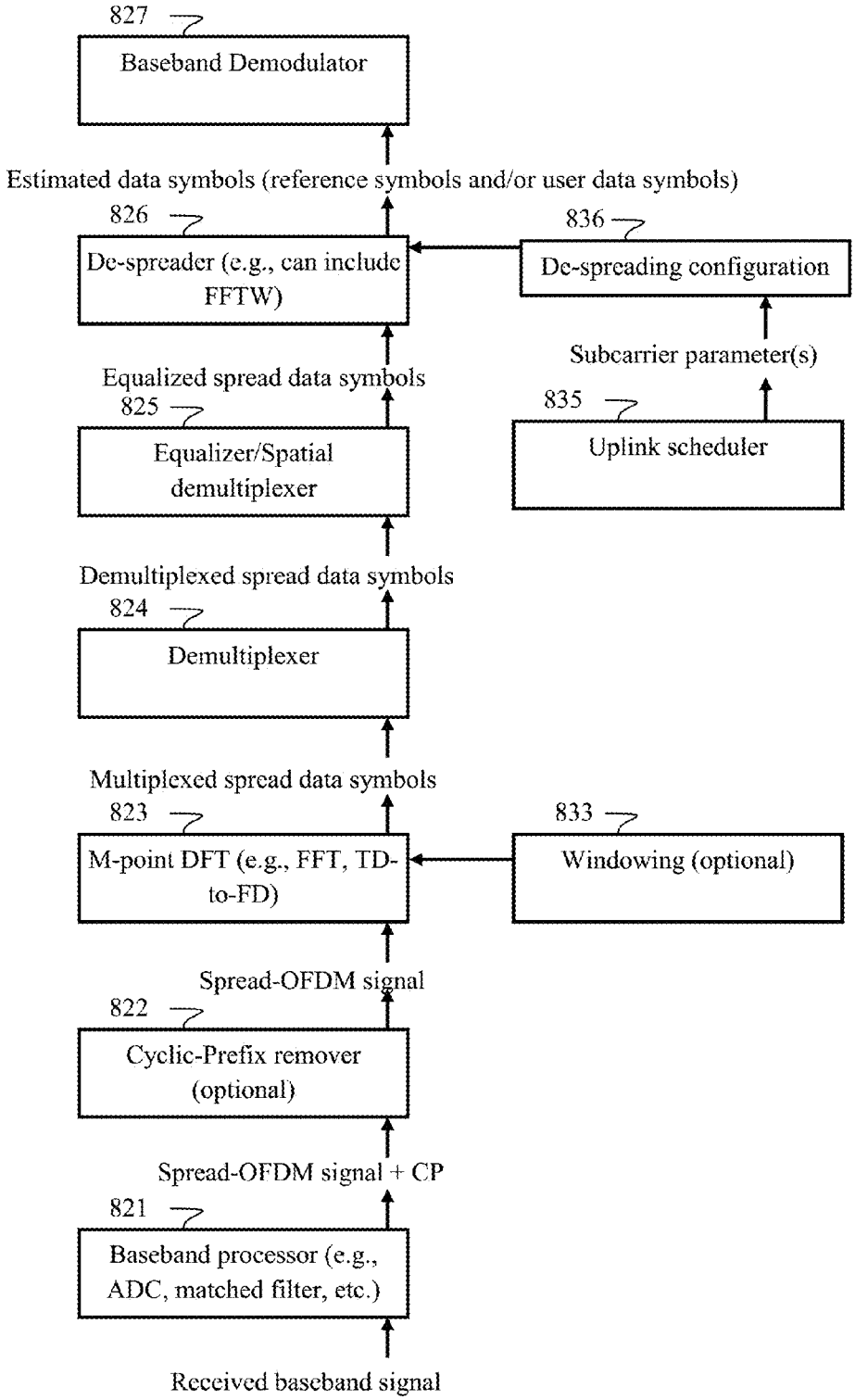
827
Baseband Demodulator
Estimated data symbols (reference symbols and/or user data symbols)
826
De-spreader (e.g., can include FFTW)
836
De-spreading configuration
Subcarrier parameter(s)
Equalized spread data symbols
825
Equalizer/Spatial demultiplexer
835
Uplink scheduler
Demultiplexed spread data symbols
824
Demultiplexer
Multiplexed spread data symbols
823
M-point DFT (e.g., FFT, TD-to-FD)
833
Windowing (optional)
Spread-OFDM signal
822
Cyclic-Prefix remover (optional)
Spread-OFDM signal + CP
821
Baseband processor (e.g., ADC, matched filter, etc.)
Received baseband signal

Figure 8B

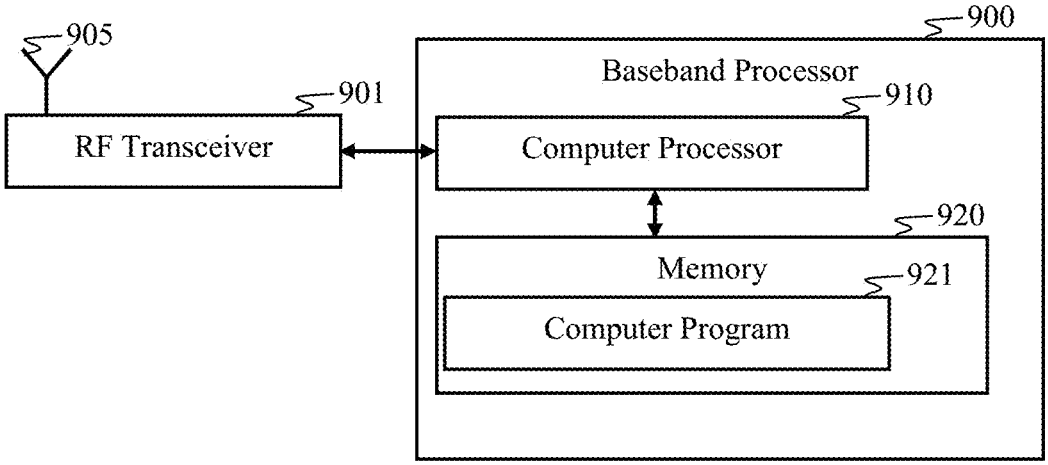
905
900
Baseband Processor
901
910
RF Transceiver
Computer Processor
920
Memory
921
Computer Program

Figure 9

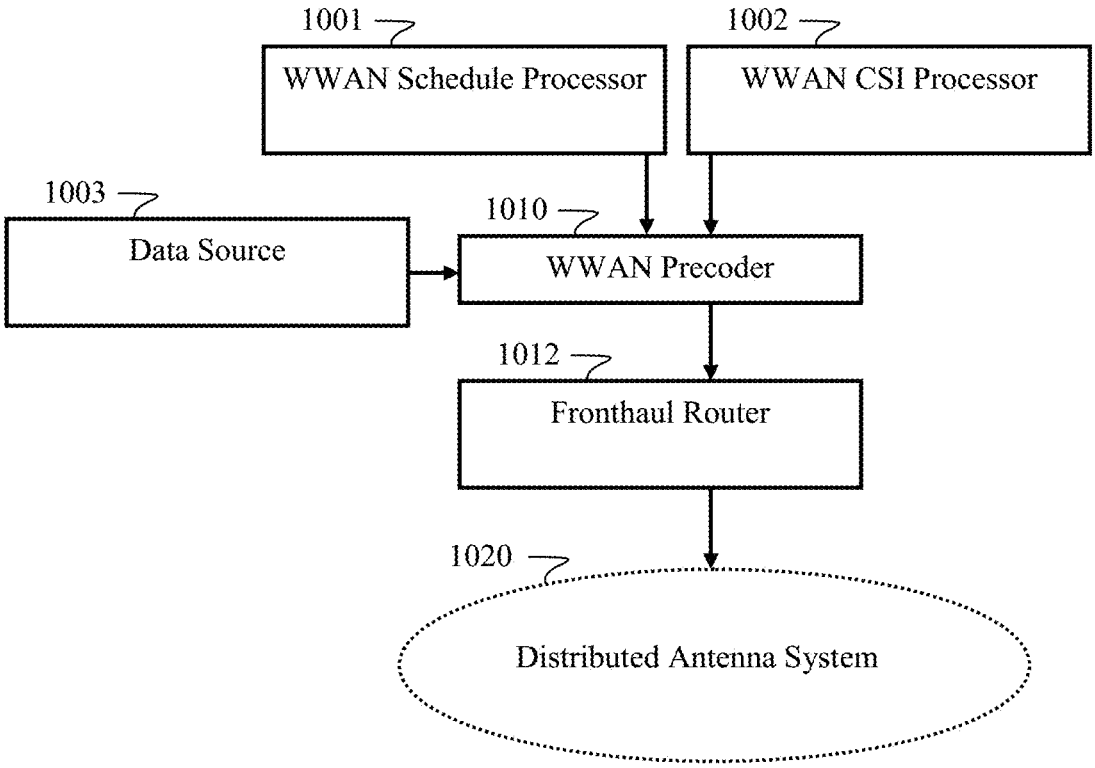
1001
WWAN Schedule Processor
1002
WWAN CSI Processor
1003
Data Source
1010
WWAN Precoder
1012
Fronthaul Router
1020
Distributed Antenna System

Figure 10A

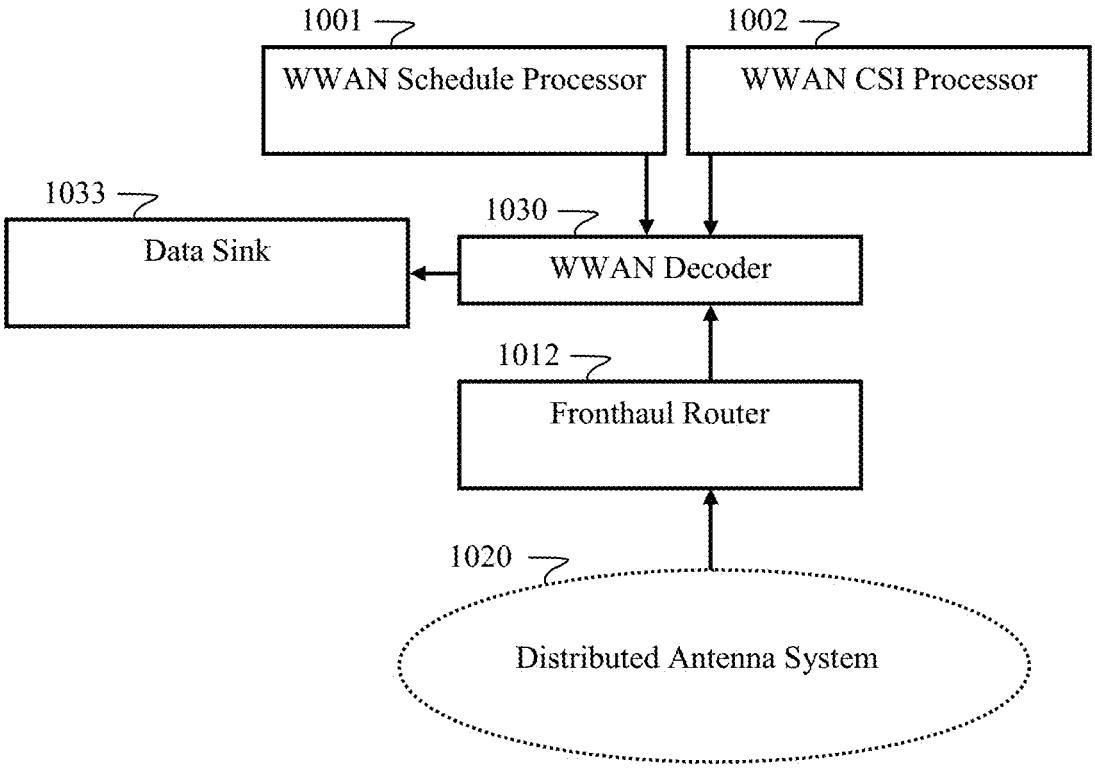
1001
WWAN Schedule Processor
1002
WWAN CSI Processor
1033
Data Sink
1030
WWAN Decoder
1012
Fronthaul Router
1020
Distributed Antenna System

Figure 10B

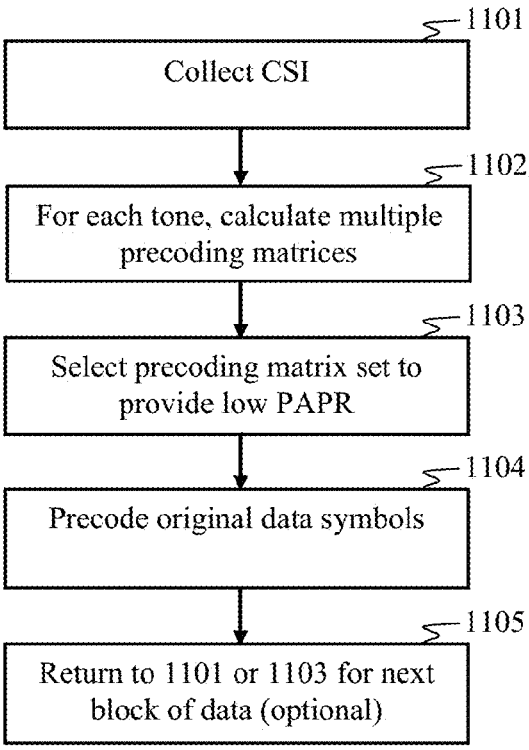

Figure 11

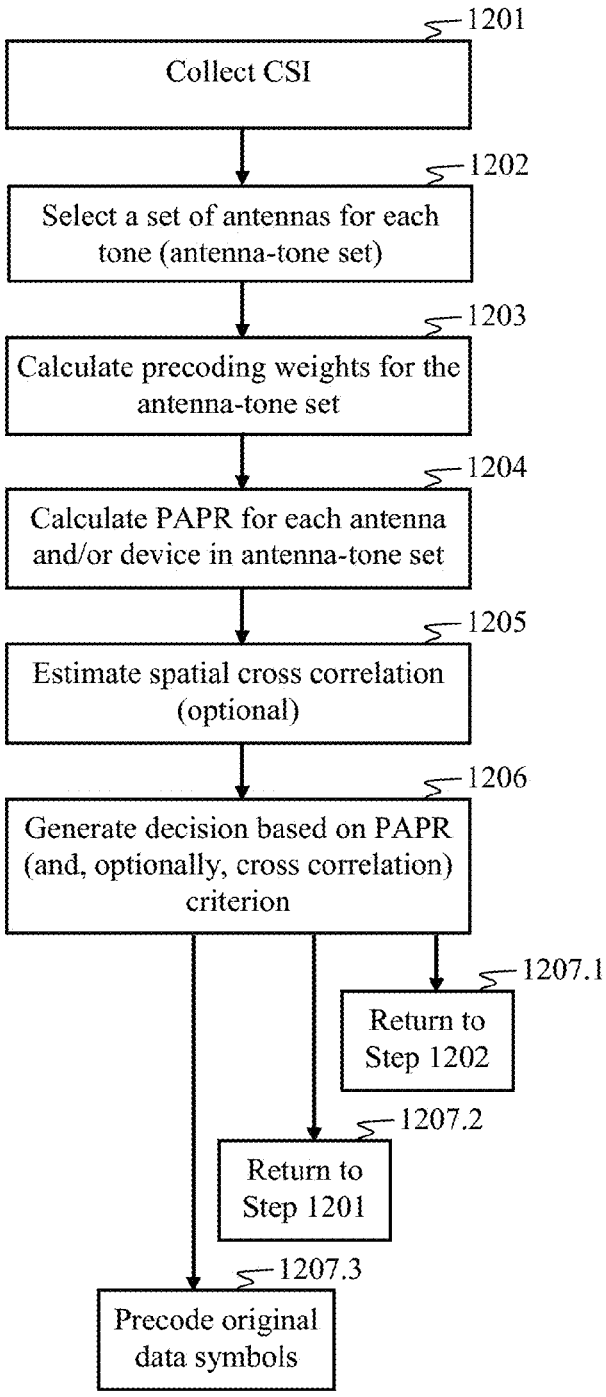

Figure 12

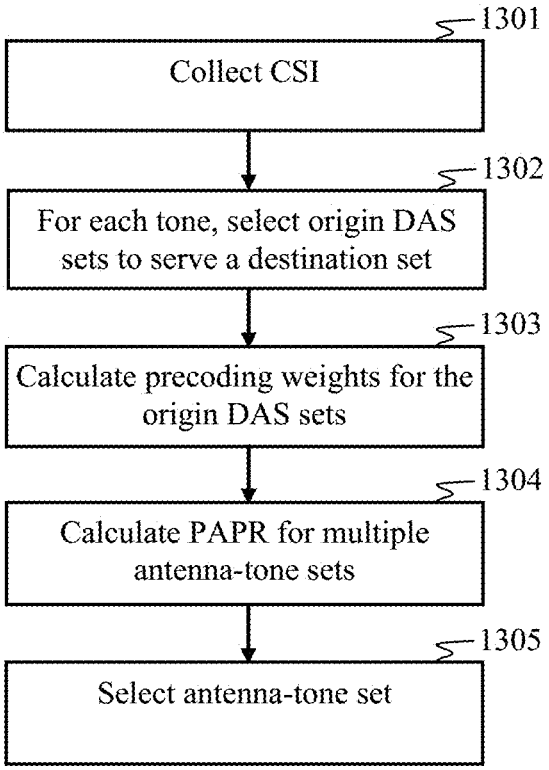
1301
Collect CSI
1302
For each tone, select origin DAS sets to serve a destination set
1303
Calculate precoding weights for the origin DAS sets
1304
Calculate PAPR for multiple antenna-tone sets
1305
Select antenna-tone set

Figure 13

SPREADING AND PRECODING IN OFDM

CROSS REFERENCE TO PRIOR RELATED APPLICATIONS

This application is a Continuation of U.S. patent application Ser. No. 15/149,382, filed May 19, 2016, now U.S. Pat. No. 9,628,231, which is a Continuation-in-Part of U.S. patent application Ser. No. 14/727,769, filed Jun. 1, 2015, which is a Continuation of U.S. patent application Ser. No. 14/276,309, filed May 13, 2014, now U.S. Pat. No. 9,048,897, which is a Continuation of U.S. patent application Ser. No. 12/545,572, filed Aug. 21, 2009, now U.S. Pat. No. 9,042,333, which is a Divisional of U.S. patent application Ser. No. 11/187,107, filed on Jul. 22, 2005, now U.S. Pat. No. 8,670,390, which claims priority to Provisional Appl. No. 60/598,187, filed Aug. 2, 2004 and is a Continuation In Part of U.S. patent application Ser. No. 10/145,854, filed on May 14, 2002, all of which are hereby incorporated by reference in their entireties and all of which this application claims priority under at least 35 U.S.C. 120 and/or any other applicable provision in Title 35 of the United States Code.

BACKGROUND

I. Field

The present invention relates generally to wireless communication networks, and more specifically to precoding multicarrier waveforms.

II. Background

The background description includes information that may be useful in understanding the present inventive subject matter. It is not an admission that any of the information provided herein is prior art or relevant to the presently claimed inventive subject matter, or that any publication, specifically or implicitly referenced, is prior art.

The most pressing need in mobile wireless wide area networks (WWANs), such as cellular networks, is to meet the increasing demand for data services. However, only a very small portion of the radio spectrum is suitable for WWAN communications. Above a few Gigahertz, path losses become too great for wide area communications in typical terrestrial environments. Only a fraction of the suitable spectrum is allocated for WWANs, and those allocations are divided among (ostensibly) competing cellular companies.

Various techniques have been proposed to enable more efficient use of the available spectrum, such as spectrum sharing, dynamic bandwidth exchange, and various "smart" radio schemes. Other techniques, such as joint scheduling and power control, can improve frequency reuse in cell configurations. Carrier aggregation simply allocates more radio channels to each client device without improving spectrum efficiency, providing a temporary increase in data services until those channels become congested.

While such techniques can provide more efficient use of the available WWAN spectrum, the laws of Physics still dictate a limit to the amount of information that can be carried with a given amount of WWAN spectrum and power. Unfortunately, demand for data bandwidth continues to grow, irrespective of the limitations imposed by Physics.

SUMMARY

In accordance with some aspects of the disclosure, this most pressing need for ever-increasing data bandwidth within a finite amount of spectrum is solved.

By way of example, a Cooperative-MIMO network comprises a distributed antenna system coordinated with Cooperative-MIMO functionality to serve multiple client devices, such as User Equipments (UEs) in a mobile WWAN. This may be referred to as server-side Cooperative MIMO. The distributed antennas can comprise a fronthaul network configured to deliver precoded Cooperative MIMO baseband signals (such as from a central processor, a distributed computing system (e.g., Cloud computing system), a remote processor, or other processor(s)) to the antennas to provide for precoded MIMO transmissions into the WWAN channel. Precoding can be configured to produce a localized coherence zone at each of the multiple client devices, which can enable each client device to be served with the entire available WWAN spectrum without causing interference to other ones of the multiple client devices. The localized coherence zone can be referred to as a spatial subchannel or a subspace channel. In one aspect, Cooperative-MIMO precoding configures the distributed network of antennas and the natural scattering environment to focus transmissions that coherently combine at each of the client devices, thereby producing the localized coherence zones. Similarly, Cooperative-MIMO demultiplexing can separate same-band transmissions from the client devices. While server-side Cooperative MIMO can provide nearly ideal frequency reuse of the WWAN spectrum, the amount of data that can be transmitted to each client device is limited by the WWAN spectrum (and power).

Therefore, in accordance with some aspects of the disclosure, the aforementioned server-side Cooperative-MIMO system(s) can further comprise a client-side Cooperative-MIMO system. By way of example, nearby client devices may self-organize into Cooperative-MIMO clusters, or some other technique may be employed to group client devices to provide for Cooperative-MIMO processing. For example, a server-side or some other centralized coordination technique may be employed. A wireless fronthaul network communicatively couples together the client devices to provide a cluster. The wireless fronthaul network can employ short-range wireless links, such as extremely high-bandwidth (relative to WWAN link bandwidth), low-power transmissions. The fronthaul transmissions can employ millimeter-wave, infrared, and/or optical spectrum, which is usually impractical for use in mobile WWANs, but which supports much higher data bandwidth than a WWAN channel. In some aspects, the fronthaul links might enable 10,000 times (or more) spectrum than the total available WWAN spectrum.

In systems disclosed herein, the theoretical limit of the WWAN data bandwidth is no longer limited by the WWAN spectrum, but rather, it can increase up to the data bandwidth of the cluster's very wideband fronthaul network minus some processing overhead. For example, on the downlink, cooperative processing among client devices in a cluster can allow one client device to aggregate the data bandwidth of all the subspace channels (i.e., localized coherence zones) serving the cluster. This is advantageous since each client device, even when it is active, does not employ its available downlink channel one hundred percent of the time. Rather, a client device typically transmits and receives data only a small fraction of the time it is being used. This is sometimes referred to as an activity factor. In accordance with aspects of the disclosure, as the cluster grows, each client device has more available instantaneous data bandwidth for the WWAN uplink and downlink. This is because multiple independent parallel spatial subchannels in the WWAN can be exploited to serve a single client device, thus expanding its data

bandwidth far beyond the limited amount of spectrum in a single WWAN subspace channel.

Such aspects of the disclosure can provide the counter-intuitive result that as more client devices join a WWAN, the data bandwidth per client device increases instead of decreases, provided that there is a sufficient number of server-side antennas to accommodate the additional devices. In accordance with some aspects of the disclosure, client devices can be provisioned to operate as server-side antennas communicatively coupled to the server-side fronthaul network. This allows the network infrastructure to grow as client devices join the WWAN. A generalized concept of a relay node is introduced in which the relay node may be part of a server-side distributed antenna system, a client-side cluster, or both. A relay node can operate in multiple clusters and/or multipoint groups. The relay node can be a client device, a server-side device or component, or some other device, and it can be configured to adapt its function as it operates with different cooperating devices.

In accordance with some aspects of the disclosure, cooperative processing can be configured to reduce backhaul overhead, including the data bandwidth required for backhaul communications. For example, in some aspects, cooperative processing at the edge of the radio access network can reduce backhaul loads. However, in many aspects, the backhaul network's spectrum is far larger than the amount of spectrum allocated to the WWAN. Thus, in some implementations, a practical limitation to the WWAN data bandwidth might be related to the processing capability of the cooperating devices. This limitation can be advantageous in view of the alternative, because unlike the hard limitation imposed by Physics, processing power approximately doubles every eighteen months according to Moore's Law.

Some aspects of the disclosure provide for configuring distributed processing to enhance processing efficiency. For example, processing performed by cooperating client devices can be configured via various techniques and/or algorithms to improve processing efficiency. As used herein, processing efficiency can be achieved by employing signal processing algorithms that require a fewer number of total operations, require a fewer number of complex operations, require a fewer number of data exchanges with other processors, reduce latency, reduce power consumption, reduce processor idle time, and the like. Various processing techniques, such as pipelined processing architectures and the like, can be configured to improve processing efficiency. An end result of improved processing efficiency can include, among other things, a cluster being able to comprise a larger number of cooperating devices.

In some aspects of the disclosure, system configurations produce a high-rank channel matrix, which permits lower-complexity maximum ratio combining/transmission to be employed instead of zero forcing or other higher-complexity algorithms.

In accordance with some aspects of the disclosure, various signal-processing algorithms employed in a WWAN transceiver can be combined, thus enabling a more efficient implementation. In some aspects, complex spreading codes can be employed to spread data symbols (e.g., user data and/or reference signals) to enable certain benefits, such as crest-factor reduction, which can enable lower power consumption, less-expensive radio components, and/or other benefits.

While some aspects of the disclosure can employ techniques to reduce the peak-to-average power (PAPR) of an OFDM transmission at the inverse discrete Fourier transform (IDFT), such as by operating on the signal output at the IDFT (e.g., via clipping, signal cancellation, or selecting one of a set of candidate OFDM signals that has the lowest PAPR), certain advantages can be realized by spreading the data symbols before the IDFT operation in a manner that causes the IDFT output signal to have a low PAPR. In such aspects, the spreading codes can be configured in response to OFDM subcarrier assignment to the device (e.g., uplink subcarriers assigned to a client device) to produce a transmitted OFDM signal with low PAPR. Parameters of the assigned subcarriers, such as subcarrier frequency spacing and number of subcarriers, can be used to determine complex spreading codes that produce a low-PAPR signal at the IDFT output. Configuring the spreading codes to provide a spread-OFDM signal with low PAPR can comprise an appropriate mapping of spread symbols to OFDM subcarriers in a manner that produces the desired low-PAPR signal. This can include re-ordering the output of the spreader prior to its input to the IDFT. In some aspects, OFDM subcarriers are assigned to a client device by a server-side device, such as to provide for channel-dependent scheduling. Thus, the server-side device can also determine the complex spreading codes for the purpose of de-spreading signals received from the client device

In some aspects of the disclosure, characteristics of a data signal, such as its spectral information (i.e., frequency response) may be processed. In accordance with some aspects of the disclosure, this processing is responsive to OFDM subcarrier assignment to configure complex spreading of the data signal (and/or its spectral information) in a manner that, based on parameters of the assigned subcarriers (such as frequency spacing), produces a spread-OFDM signal with low PAPR. Without complex spreading configured in the aforementioned manner, the spectral information modulated onto an OFDM signal can produce a transmission with high PAPR. In some aspects of the disclosure, a transmitter receives an OFDM subcarrier assignment, and based on subcarrier parameters (such as frequency spacing, number of subcarriers, and/or other parameters) configures a transform operation that includes complex spreading codes which spread a data signal in a manner that, when modulated onto the OFDM subcarriers, produces a superposition signal (i.e., a transmitted OFDM signal) with a low PAPR.

By way of example, data spreading in the WWAN uplink channel can be performed by the individual client devices, wherein the spreading codes can be configured to employ fast algorithms for spreading and/or spreading-code generation. In some aspects, the data spreading can be configured to employ a similar fast algorithm used for a different signal processing operation, such as an IDFT used for modulating data onto an OFDM signal and/or a DFT used for demodulation. This can permit a given logical structure and/or physical processor architecture to perform similar signal processing algorithms (e.g., fast algorithms) for different radio transceiver operations (e.g., coding and modulation). In some aspects, a pipelined architecture can be employed, such as to make efficient use of one or more processors (e.g., a specialized hardware component or a general-purpose processor configured to perform the fast algorithm) to perform the different radio transceiver operations. In some aspects, multiple processors residing on different devices (e.g., client devices, server devices, combinations thereof) can be configured to cooperatively process signals via fast algorithms, wherein the client-side fronthaul can function as a computer bus (such as between processors, memories, ports, and/or other network resources) between computing components distributed across multiple network nodes, including client devices. In such aspects, the networked

processors can be pipelined to provide efficient processing of multiple radio transceiver operations.

By way of example, a fast algorithm can be a fast Fourier transform (FFT), such as a radix-2 FFT. Thus, a client device can be configured to perform a radix-2 FFT as part of a DFT-spreading of original data symbols, and the client device can be configured to perform a radix-2 FFT to modulate the spread data symbols onto OFDM subcarrier signals. In some aspects, the client device can configure processing hardware and/or software to employ the same radix-2 FFT (although possibly with different input parameters, transform size, etc.) for different, typically unrelated, radio transceiver operations, such as DFT-spreading and OFDM modulation, or DFT-spreading and OFDM demodulation, as well as others. It should be appreciated that such aspects may be performed as part of cooperative processing among multiple client devices, on the server side, with the aid of one or more relay devices, and/or some combination thereof.

In accordance with some aspects of the disclosure, spreading produces a different result than spectrum analysis. For example, spectrum analysis can provide for calculating frequency responses of a signal corresponding to tones. The term, "tones," is commonly used to mean orthogonal frequencies, such as in relation to the term, "discrete multitone modulation," which denotes OFDM-based communication systems that adapt the transmission to the channel conditions individually for each subcarrier. In OFDM, as in spectrum analysis, the tones are a set of frequency-multiplexed signals with the exact frequencies needed to make them orthogonal so they do not interfere with each other. In discrete systems, spectrum analysis expresses a discrete signal of N complex data symbols as a set of N/2 frequency responses. This is because frequencies between the Nyquist rate $f_{sam}/2$ and the sample rate f_{sam} alias to negative frequencies due to sampling above the Nyquist rate. These are the same tones as the corresponding positive frequencies. While the output of a DFT comprises N values, there are only N/2 tones, so the N/2 redundant frequency responses are typically discarded to provide spectral analysis, resulting in only half the values that DFT spreading would otherwise provide.

In some aspects of the disclosure, a radio transceiver can be configured to perform another type of signal-processing operation for different, typically unrelated, radio transceiver operations. By way of example, linear network coding can be configured to employ similar processing operations as in MIMO subspace precoding (i.e., multiplexing) and/or demultiplexing. Similarly, linear network decoding can employ similar operations as MIMO subspace multiplexing and/or demultiplexing. Thus, client-side and/or server-side processors can be configured to perform linear network coding that employs basically the same algorithms used to provide for spatial multiplexing and/or demultiplexing.

Aspects disclosed herein can be implemented as apparatus configurations comprising structural features that perform the functions, algorithms, and methods described herein. Flow charts and descriptions disclosed herein can embody instructions, such as in software residing on a non-transitory computer-readable medium, configured to operate a processor (or multiple processors). Flow charts and functional descriptions, including apparatus diagrams, can embody methods for operating a communication network(s), coordinating operations which support communications in a network(s), operating network components (such as client devices, server-side devices, relays, and/or supporting devices), and assembling components of an apparatus configured to perform the functions disclosed herein.

Groupings of alternative elements or aspect of the disclosed subject matter disclosed herein are not to be construed as limitations. Each group member can be referred to and claimed individually or in any combination with other members of the group or other elements found herein. One or more members of a group can be included in, or deleted from, a group for reasons of convenience and/or patentability. When any such inclusion or deletion occurs, the specification is herein deemed to contain the group as modified, thus fulfilling the written description of all Markush groups used in the appended claims.

All methods described herein can be performed in any suitable order unless otherwise indicated herein or otherwise clearly contradicted by context. The use of any and all examples, or exemplary language (e.g., "such as") provided with respect to certain embodiments herein is intended merely to better illuminate the inventive subject matter and does not pose a limitation on the scope of the inventive subject matter otherwise claimed. No language in the specification should be construed as indicating any non-claimed element as essential to the practice of the inventive subject matter.

Additional features and advantages of the invention will be set forth in the description which follows, and in part will be obvious from the description, or may be learned by practice of the invention. The features and advantages of the invention may be realized and obtained by means of the instruments and combinations particularly pointed out in the appended claims. These and other features of the invention will become more fully apparent from the following description and appended claims, or may be learned by the practice of the invention as set forth herein.

The following patent applications and patents are hereby incorporated by reference in their entireties: U.S. Pat. No. 8,670,390, patent application Ser. No. 10/145,854, U.S. Pat. No. 9,225,471, U.S. Pat. No. 9,270,421, U.S. Pat. No. 9,325,805, patent application Ser. No. 14/789,949, Pat. Appl. No. 62/197,336, patent application Ser. No. 14/967,633, Pat. Appl. No. 60/286,850, U.S. Pat. No. 8,929,550, U.S. Pat. No. 7,430,257, U.S. Pat. No. 6,331,837, and U.S. Pat. No. 7,076,168.

BRIEF DESCRIPTION OF DRAWINGS

Flow charts depicting disclosed methods comprise "processing blocks" or "steps" may represent computer software instructions or groups of instructions. Alternatively, the processing blocks or steps may represent steps performed by functionally equivalent circuits, such as a digital signal processor or an application specific integrated circuit (ASIC). The flow diagrams do not depict the syntax of any particular programming language. Rather, the flow diagrams illustrate the functional information one of ordinary skill in the art requires to fabricate circuits or to generate computer software to perform the processing required in accordance with the present disclosure. It should be noted that many routine program elements, such as initialization of loops and variables and the use of temporary variables are not shown. It will be appreciated by those of ordinary skill in the art that unless otherwise indicated herein, the particular sequence of steps described is illustrative only and can be varied. Unless otherwise stated, the steps described below are unordered, meaning that the steps can be performed in any convenient or desirable order.

FIG. **1** is a block diagram of a communication system architecture in accordance with an exemplary aspect of the disclosure.

FIG. **2** illustrates a network configuration for super-array processing in accordance with some aspects of the disclosure.

FIG. **3** is a block diagram of a network topology, the type of which can be employed in accordance with aspects of the disclosure.

FIG. **4**A is a block diagram of a spread-OFDM transmitter in accordance with an aspect of the disclosure.

FIG. **4**B is a block diagram of a spread-OFDM spreader (such as spreader **402**) in accordance with some aspects of the disclosure.

FIG. **5**A is a block diagram of a receiver configured to receive and process spread-OFDM signals in accordance with aspects of the disclosure.

FIG. **5**B is a block diagram that depicts a portion of a receiver, such as a receiver that may be employed in a server-side WWAN terminal or system.

FIG. **6**A is a flow diagram that depicts a method performed in a radio transceiver, which can employ a fast algorithm to generate a spread data sequence from an original data sequence in accordance with some aspects of the disclosure.

FIG. **6**B is a flow diagram that depicts a method for processing received spread-OFDM signals, which can be employed in accordance with various aspects of the disclosure.

FIG. **7**A is a flow diagram that depicts a method for generating spread-OFDM signals in accordance with some aspects of the disclosure.

FIG. **7**B is a flow diagram that depicts a method of processing received spread-OFDM signals in accordance with some aspects of the disclosure.

FIG. **8**A is a block diagram that depicts modules corresponding to processing functions that can be implemented by a computer processor programmed to perform methods in accordance with aspects of the disclosure. The blocks can be interpreted as software modules, hardware components, or some combination thereof. The modules can represent steps in a method. In some aspects, the block diagram is indicative of structure and/or function of a client device (such as a UE) or a system of client devices.

FIG. **8**B is a block diagram that depicts modules corresponding to processing functions that can be implemented by a computer processor programmed to perform methods in accordance with aspects of the disclosure. The blocks can be interpreted as software modules, hardware components, or some combination thereof. The modules can represent steps in a method. In some aspects, the block diagram is indicative of structure and/or function of a server-side device (such as a base transceiver station (e.g., an eNodeB) or a central processor coupled to one or more base transceiver stations), or a system of server-side devices, such as a Coordinate Multipoint system.

FIG. **9** is a block diagram of a transceiver that can be configured to operate in accordance with aspects of the disclosure.

FIGS. **10**A and **10**B are block diagrams that illustrates transceiver configurations in accordance with aspects of the disclosure. The blocks can comprise processing elements that provide necessary computing facilities for the transceiver. By way of example only, processing elements can include special purpose hardware accelerators, such as co-processors for Fast Fourier Transform (FFT), encryption and decryption security processors, or programmable Central Processing Units (CPUs).

FIG. **11** is a flow diagram that depicts a precoding method in a distributed antenna system in accordance with some aspects of the disclosure.

FIG. **12** is a flow diagram that depicts a precoding method in a distributed antenna system in accordance with some aspects of the disclosure.

FIG. **13** is a flow diagram that depicts a precoding method in a distributed antenna system in accordance with some aspects of the disclosure.

DETAILED DESCRIPTION

Various aspects of the disclosure are described below. It should be apparent that the teachings herein may be embodied in a wide variety of forms and that any specific structure, function, or both being disclosed herein are merely representative. Based on the teachings herein one skilled in the art should appreciate that an aspect disclosed herein may be implemented independently of any other aspects and that two or more of these aspects may be combined in various ways. For example, an apparatus may be implemented or a method may be practiced using any number of the aspects set forth herein. In addition, such an apparatus may be implemented or such a method may be practiced using other structure, functionality, or structure and functionality in addition to or other than one or more of the aspects set forth herein.

In the following description, for the purposes of explanation, numerous specific details are set forth in order to provide a thorough understanding of the invention. It should be understood, however, that the particular aspects shown and described herein are not intended to limit the invention to any particular form, but rather, the invention is to cover all modifications, equivalents, and alternatives falling within the scope of the invention as defined by the claims.

FIG. **1** is a block diagram of a communication network in accordance with an exemplary aspect of the disclosure. A plurality N of geographically distributed base transceiver stations **101.1-101**.N (BTS(**1**), BTS(**2**), . . . , BTS(N)) are communicatively coupled to a super-array processing system **111** via a communication network **105**. Each base transceiver station **101.1-101**.N comprises an antenna system configured for communicating with one or more mobile units (e.g., User Equipment) **120.1-120**.K via a WWAN radio access network (RAN).

In one aspect, the first base transceiver station **101.1** comprises a first antenna array comprising a first plurality M_1 of antennas **102.1-102**.M_1, the second base transceiver station **101.2** comprises a second antenna array comprising a second plurality M_2 of antennas **102.1-102**.M_1, and the Nth base transceiver station **101**.N comprises an Nth antenna array comprising an Nth plurality M_N of antennas **104.1-104**.M_N. The base transceiver stations **101.1-101**.N are configured to provide RAN services to a plurality K of mobile units **120.1**, **120.2**, . . . , **120**.K, each having its own antenna system **121.1**, **121.2**, . . . , **121**.K, respectively. Each antenna system **121.1**, **121.2**, . . . , **121**.K may comprise one or more antennas.

The communication network **105** may comprise a fiber network, a cable (i.e., wired) network, a wireless network (including a free-space optical network), or any combination thereof. In some aspects, the network **105** is referred to as a "fronthaul" network. In some aspects, the network **105** can comprise a backhaul network. In accordance with one aspect of the disclosure, a network that connects base transceiver stations to a processing system configured to perform joint processing (e.g., system **111**) can be referred to as a fron-

thaul, and a network (such as network **115**) which connects processing elements of the super-array processing system **111** can be referred to as a backhaul.

The terms "backhaul" and "fronthaul" can be used interchangeably in some aspects of the disclosure. A fronthaul is similar to a backhaul, which, at its simplest, links a radio access network to a wired (e.g., cable or optical fiber) network. A fronthaul can comprise a backhaul, or a portion of a backhaul. For example, a fronthaul can comprise a connection between one or more centralized controllers and remote stand-alone radio heads. A fronthaul can connect a central processor to multiple base transceiver stations. A fronthaul connects multiple base transceiver stations together when one or more of the base transceiver stations functions as a central processor. As used herein, a fronthaul may comprise a traditional backhaul network. For example, a fronthaul can comprise at least a portion of S1 and/or X2 interfaces. A fronthaul may be part of a base station network. In Pat. Appl. Ser. No. 60/286,850, it is disclosed that a fronthaul can comprise optical fiber, wired, and/or radio networks. In one aspect of the disclosure, point-to-point fiber links provide high bandwidth and low latency. In another aspect, radio (e.g., microwave) links can provide high bandwidth and low latency, and can be substantially less expensive to implement than fiber. Furthermore, wireless links enable mobile radios and/or other radio transceivers (e.g., remote radio equipment) to be networked together via a radio fronthaul, such as disclosed in patent application Ser. No. 10/131,163. Accordingly, a fronthaul can comprise any combination of wireless, wired, and optical fiber links that communicatively couple together a group of radio transceivers configured to perform cooperative MIMO. Here, a group of radio transceivers is also referred to as a "micro-cell" and a "pico-cell" in the '163 application, and as a "local group" and a "micro-network" in patent application Ser. No. 11/187,107, all of the patents and patent applications mentioned in this disclosure being incorporated by reference in their entireties.

In one aspect of the disclosure, the super-array processing system **111** comprises a distributed computing system configured to coordinate a plurality of physical processors (which may be centrally located or geographically distributed) such as to perform joint processing. In some aspects, the plurality of physical processors can be represented as processors **111.1-111**.N. In other aspects, virtual processors (such as virtual base stations implemented as software-defined radios (SDRs)) can be represented as processors **111.1-111**.N.

By way of example, but without limitation, physical processors in a distributed computing environment can be represented as processors **111.1-111**.N. As used herein, the term "processor" can refer to a computer processor, a computer, a server, a central processing unit (CPU), a core, a microprocessor, and/or other terminology that indicates electronic circuitry configurable for carrying out instructions of a computer program. In some aspects, a processor comprises geographically distributed computing elements (e.g., memories, processing cores, switches, ports, and/or other computing or network resources). A fronthaul and/or backhaul network communicatively coupling the geographically distributed computing elements can function as a computer bus.

The processors are communicatively coupled together via at least one network, such as a backhaul network **115**. The backhaul network **115** can comprise an optical fiber network, a wireline network (e.g., Ethernet or other cable links), a wireless network, or any combination thereof. In some aspects, the backhaul network **115** can comprise the RAN. In one aspect, each of N processors is programmed to function as one of a plurality N of virtual base stations **111.1-111**.N. In another aspect, each virtual base station **111.1-111**.N comprises multiple processing cores. In some aspects, each virtual base station **111.1-111**.N represents a hardware abstraction wherein details of how the hardware is implemented are concealed within the representation of each "processor" **111.1-111**.N as a single element. In such aspects, the physical implementation of each processor **111.1-111**.N can comprise physical computing elements that are geographically distributed and/or physical computing elements that are shared by multiple virtual base stations **111.1-111**.N.

By way of example, each virtual base stations **111.1-111**.N may comprise one or more of the processors and perform base station processing operations that would ordinarily be performed by one or more corresponding base stations **101.1-101**.N. Specifically, virtual base stations can be implemented via software that programs general-purpose processors. For example, an SDR platform virtualizes baseband processing equipment, such as modulators, demodulators, multiplexers, demultiplexers, coders, decoders, etc., by replacing such electronic devices with one or more virtual devices, wherein computing tasks perform the functions of each electronic device. In computing, virtualization refers to the act of creating a virtual (rather than actual) version of something, including (but not limited to) a virtual computer hardware platform, operating system (OS), storage device, or computer network resources.

In accordance with the art of distributed computing, a virtual base station's functions can be implemented across multiple ones of the plurality of processors. For example, workloads may be distributed across multiple processor cores. In some aspects, functions for more than one base station are performed by one of the processors.

As used herein, distributed computing refers to the use of distributed systems to solve computational problems. In distributed computing, a problem is divided into multiple tasks, and the tasks are solved by multiple computers which communicate with each other via message passing. A computer program that runs in a distributed system is referred to as a distributed program. An algorithm that is processed by multiple constituent components of a distributed system is referred to as a distributed algorithm. In a distributed computing system, there are several autonomous computational entities, each of which has its own local memory.

In accordance with aspects of the disclosure, the computational entities (which are typically referred to as computers, processors, cores, CPUs, nodes, etc.) can be geographically distributed and communicate with each other via message passing. In some aspects, message passing is performed on a fronthaul and/or backhaul network. The distributed computing system can consist of different types of computers and network links, and the system (e.g., network topology, network latency, number of computers, etc.) may change during the execution of a distributed program. In one aspect, a distributed computing system is configured to solve a computational problem. In another aspect, a distributed computing system is configured to coordinate and schedule the use of shared communication resources between network devices.

A distributed computing system can comprise a grid computing system (e.g., a collection of computer resources from multiple locations configured to reach a common goal, which may be referred to as a super virtual computer). In some aspects, a distributed computing system comprises a

computer cluster which relies on centralized management that makes the nodes available as orchestrated shared servers. In some aspects, a distributed computing system comprises a peer-to-peer computing system wherein computing and/or networking comprises a distributed application architecture that partitions tasks and/or workloads between peers. Such distributed peer-to-peer computing systems are disclosed in the '107 application. In some aspects, peers are equally privileged, equipotent participants in the application. They are said to form a peer-to-peer network of nodes. Peers make a portion of their resources, such as processing power, disk storage, network bandwidth, etc., available to other network participants without the need for central coordination by servers or stable hosts. Peers can be either or both suppliers and consumers of resources.

In accordance with some aspects of the disclosure, the base transceiver stations **101.1-101**.N are "dumb terminals," wherein base station signal processing (for example, the baseband processing) is performed by the central processor **110** (which may include the distributed computing system **111**). Thus, in some aspects, the base transceiver stations **101.1-101**.N are simply radio remote units. For example, the base transceiver stations **101.1-101**.N might perform only basic signal-processing functions, such as RF processing (i.e., radio front-end processing), which can include frequency conversion and (optionally) ADC/DAC functions, while the central processor **110** (which may include the distributed computing system **111**) performs baseband processing, including channel analysis and generating base transceiver MIMO weights.

In one aspect, the central processor **110** coordinates or performs baseband signal processing corresponding to base station operations, whereas the base transceivers **101.1-101**.N provide only RF front end signal processing, including frequency conversion, and optionally, ADC/DAC. The central processor can perform waveform shaping, error detection, error correction, power control, channel selection, multiple access control, multiplexing, modulation, formatting, synchronization, coding, etc. for the plurality of base transceivers (i.e., access points) communicatively coupled to the central processor via the fronthaul network. In some aspects of the disclosure, the central processor **110** provides for base-station functionality, such as power control, code assignments, and synchronization. The central processor **110** may perform network load balancing (e.g., scheduling RAN resources), including providing for balancing transmission power, bandwidth, and/or processing requirements across the radio network. Centralizing the processing resources (i.e., pooling those resources) facilitates management of the system, and implementing the processing by employing multiple processors configured to work together (such as disclosed in the '163 application) enables a scalable system of multiple independent computing devices, wherein idle computing resources can be allocated and used more efficiently.

Some aspects allow base station processing resources (e.g., the processors in the distributed computing system **111**) and the remote RF units (e.g., the base transceiver stations **101.1-101**.N) to be deployed separately. For example, RAN coverage, capacity, and/or data bandwidth per UE can be improved by adding base transceiver stations, and then the SDR platform dynamically adapts to the new RAN base station configuration. Similarly, the SDR platform can adapt to the loss of one or more of the base transceiver stations **101.1-101**.N. The distributed computing system (e.g., cloud network) **111** can adapt to varying processing loads by allocating computing resources as needed. Furthermore, system upgrades, such as new transmission protocols, can be easily implemented via software upgrades to the SDR platform.

In some aspects, base-station functionality is controlled by individual base transceiver stations and/or UEs assigned to act as base stations. Array processing may be performed in a distributed sense wherein channel estimation, weight calculation, and optionally, other network processing functions (such as load balancing) are computed by a plurality of geographically separated processors. In some aspects, access points and/or subscriber units are configured to work together to perform computational processing. A central processor (such as central processor **110**) may optionally control data flow and processing assignments throughout the network.

As disclosed in the '850 application, the system depicted in FIG. **1** can provide system performance benefits by centralizing (e.g., pooling) much of the equipment (and/or signal processing) typically employed at the cell sites. Cost reduction is another motivation for centralizing the radio access network, as most of a cellular network's ownership costs comprise operating costs, including site rental, power, and support and maintenance expenses. Thus, instead of distributing baseband processing equipment at the edge of the network as in conventional cellular networks, centralizing the radio access network at the central processor **110** can greatly reduce capital expenditures to build out and upgrade the radio access network, as well as reduce operating expenditures.

As disclosed in the '163 application, providing for distributed computing at the central processor **110** provides network function virtualization to the RAN. Benefits that can be realized with some aspects of the disclosure include cost reduction from pooling and virtualizing baseband processing. This can eliminate the need to provision for peak capacity on a per-site basis, thus reducing processing requirements. Furthermore, instead of requiring dedicated base station hardware, some of the disclosed aspects provide for the use of commercial (e.g., general-purpose) servers running software.

As disclosed in the patents and applications incorporated by reference herein, other types of networks, including wireless networks, can connect the base transceiver stations **101.1-101**.N. One of the advantages of employing the optical fiber fronthaul **105** is that optical fiber can provide the high capacity and low latency required by many aspects of the invention. For example, when a large number of baseband processors are co-located at the central processor **110**, the amount of data bandwidth in the fronthaul and the synchronization requirements between base transceiver stations **101.1-101**.N can increase substantially when high RF bandwidth and MIMO are employed. Different aspects of the invention can provide for different functional splits between centralized and distributed functions.

Some aspects of the invention can reduce fronthaul requirements by implementing at least some of the Physical Layer processing at the base transceiver stations **101.1-101**.N while implementing other processing (e.g., higher layer processing, or the higher layer processing plus some of the Physical layer processing) at the central processor **110**. Thus, in some aspects of the invention, one or more of the base transceiver stations **101.1-101**.N depicted in the figures may be replaced by UEs adapted to perform as routers, repeaters, and/or elements of an antenna array.

In one aspect of the disclosure, the base station network comprising base transceiver stations **101.1-101**.N is adapted to operate as an antenna array for MIMO subspace process-

ing in the RAN. In such aspects, a portion of the network may be adapted to serve each particular UE. The SDRs (represented as the virtual base stations **111.1-111**.N) can be configured to perform the RAN baseband processing. Based on the active UEs in the RAN and the standard(s) they use for their wireless links, the SDRs can instantiate virtual base station processes in software, each process configured to perform the baseband processing that supports the standard (s) of its associated UE(s) while utilizing a set of the base transceiver stations within range of the UE(s).

In accordance with one aspect of the disclosure, baseband waveforms comprising RAN channel measurements and/or estimates (such as collected by either or both the UEs and the base transceiver stations) are processed by the SDRs (such as in a Spatial Multiplexing/Demultiplexing module (not shown)) using Cooperative-MIMO subspace processing to produce pre-coded waveforms. A routing module (not shown) sends the pre-coded waveforms over the fronthaul **105** to multiple ones of the base transceiver stations **101.1-101**.N, and optionally, to specific antennas **102.1-102**.M_1, **103.1-103**.M_2, . . . , **104.1-104**.M_N. The base transceiver stations **101.1-101**.N can be coordinated to concurrently transmit the pre-coded waveforms such that the transmitted waveforms propagate through the environment and constructively interfere with each other at the exact location of each UE **120.1-120**.K.

In one aspect, the super-array processing system **111** configures complex-weighted transmissions **122**, **123**, and **124** from the geographically distributed base transceiver station **101.1**, **101.2**, and **101**.N, respectively to exploit the rich scattering environment in a manner that focuses low-power scattered transmissions to produce a concentrated high-power, highly localized signal (e.g., coherence zones **125.1**, **125.2**, . . . , **125**.K) at each UE's **120.1-120**.K antenna system **121.1**, **121.2**, . . . , **121**.K, respectively. The coherent combining of the transmitted waveforms at the location of each UE **120.1-120**.K can result in the synthesis of the baseband waveform that had been output by the SDR instance associated with that particular UE **120.1-120**.K. Thus, all of the UEs **120.1-120**.K receive their own respective waveforms within their own synthesized coherence zone concurrently and in the same spectrum.

In accordance with one aspect of the invention, each UE's corresponding synthesized coherence zone comprises a volume that is approximately a carrier wavelength or less in width and centered at or near each antenna on the UE. This can enable frequency reuse between nearby—even co-located—UEs. As disclosed in the '107 application, Spatial Multiplexing/Demultiplexing can be configured to perform maximum ratio processing. Any of various algorithms for MIMO processing disclosed in the '107 application may be employed by methods and apparatus aspects disclosed herein. Some aspects can comprise zero forcing, such as to produce one or more interference nulls, such as to reduce interference from transmissions at a UE that is not an intended recipient of the transmission. By way of example, but without limitation, zero forcing may be performed when there are a small number of actual transmitters (e.g., base transceiver station antennas) and/or effective transmitter sources (e.g., scatterers in the propagation environment).

While the aforementioned techniques of server-side Cooperative MIMO in a multi-user MIMO system provide substantial bandwidth efficiency, which is a significant advance in wireless communications, the amount of data bandwidth available to each UE is still hard-limited based on the total radio bandwidth allocated to the WWAN. However, client-side Cooperative MIMO can elegantly circumvent the data bandwidth limitation of the aforementioned multi-user MIMO system.

By way of example, some aspects of the disclosure configure the UEs **120.1-120**.K to form a cluster in which the individual UEs **120.1-120**.K are communicatively coupled together via a client device fronthaul network **102**, which can comprise any of various types of local area wireless networks, including (but not limited to) wireless personal area networks, wireless local area networks, short-range UWB networks, wireless optical networks, and/or other types of wireless networks. In some aspects, since the bandwidth of the client device fronthaul network **102** is typically much greater than that of the WWAN, a UE **120.1-120**.K can share its access to the RAN (i.e., its WWAN spatial subchannel, or coherence zone) with other UEs **120.1-120**.K in the cluster, thus enabling each UE **120.1-120**.K to enjoy up to a K-fold increase in instantaneous data bandwidth.

In some aspects, otherwise inactive UEs can share their WWAN access with active UEs in the cluster. Since the activity factor of an active UE is typically a small fraction, an active UE can share its unused WWAN spatial subchannel with other UEs in the cluster. In addition to access to higher data bandwidth, there can be other incentives for a UE to cooperate in a cluster, including (but not limited to) lower power consumption (such as due to client-side antenna array gain), improved coverage and reliability, as well as other benefits and incentives.

In some aspects, a cluster of UEs can perform cooperative subspace demultiplexing. In some aspects, the cluster can perform cooperative subspace multiplexing by coordinating weighted (i.e., pre-coded) transmissions to produce localized coherence zones at other clusters and/or at the base transceiver stations **101.1-101**.N. In some aspects, the UEs **120.1-120**.K comprise a distributed computing platform configured to perform distributed processing (and optionally, other cloud-based services). Distributed processing may be performed for Cooperative-MIMO, other various SDR functions, and/or any of various network control and management functions.

FIG. **2** is a block diagram of a communication network in accordance with another exemplary aspect of the disclosure. Similar features depicted in FIG. **1** have the same reference numerals. In FIG. **2**, the concept of a relay node is introduced. By way of example, a relay n **101**.*n* comprises and antenna system **109**.*n* and is communicatively coupled to at least one base transceiver station (such as BTS (**1**)) via a fronthaul network, which may be fronthaul **105** or a separate fronthaul **107**. Similarly, a relay k **120**.*k* is depicted as being communicatively coupled to a cluster of UEs **120.1-120**.K via fronthaul **102**. The relay k **120**.*k* may be coupled to other network nodes via other fronthauls (such as fronthaul **105**).

In one aspect, a relay is a dedicated relay node, such as may be configured specifically to operate as part of the WWAN infrastructure. In another aspect, a relay is an abstraction which denotes any of various devices that is configurable to operate as a relay node, as a member of a UE cluster, and/or as a member of server-side (e.g., BTS) antenna system (e.g., in a base transceiver antenna cluster). In some aspects, a relay can be a UE. In some aspects, a relay can be a base transceiver station. For example, relay n **101**.*n* may be a UE configurable to cooperate with base transceiver station **101.1**, such as to increase the rank of the antenna system's **102.1-102**.M_1 channel matrix. Relay k **120**.*k* can comprise a base transceiver station configurable to communicate with a UE cluster **120.1-120**.K via its fronthaul **102**,

and/or increase the rank of the cluster's channel matrix. In some aspects, a relay can simultaneously operate in multiple clusters. For example, a relay could operate in multiple UE clusters. In some aspects, a relay can operate as both a UE and a base transceiver station (or as a component of a base transceiver station's antenna system).

As disclosed in the patents and patent applications incorporated by reference herein, and particularly with respect to aspects of Cooperative-MIMO systems and methods, network nodes can function as either or both clients and servers. Furthermore, when wireless network nodes cooperate in subspace processing, they can create network resources, such as subspace (i.e., spatial multiplexing) channels, performance gains, RAN coverage area, etc. Even when UEs cooperate as a client array (e.g., a UE cluster) in a Cooperative-MIMO implementation, each UE can improve the data bandwidth, quality of service, range, and power efficiency of the other UEs in the array, or cluster. Thus, in some aspects of a Cooperative-MIMO system, UEs can extend the network infrastructure, such as to increase per-client data bandwidth, the number of clients served, coverage area, and/or quality of service without requiring substantial capital outlays from network operator to upgrade the base station network.

In Cooperative-MIMO systems, mobile UEs can opportunistically join together via a peer-to-peer overlay network (e.g., fronthaul **102**) for client-side MIMO processing. In some aspects, UEs can join base transceiver arrays via an overlay network (e.g., fronthaul **107**) to assist in server-side MIMO processing. Due to random movement of UEs, aspects of the disclosure do not impose a particular structure on the overlay network. Because there is no structure globally imposed upon them, unstructured networks are easy to build and allow for localized optimizations to different regions of the overlay. Also, in such aspects, because the role of all peers in the network is the same, unstructured networks can be highly robust in the face of high rates of churn (i.e., when peers are frequently joining and leaving the network).

FIG. **3** is a block diagram of a network topology, the type of which can be employed in accordance with aspects of the disclosure. In this network topology, a plurality of nodes (e.g., nodes **301**.**1**-**301**.N) are communicatively coupled together via communication links (such as depicted by networks **301**-**305**), which form a network fabric. The depiction of "nodes" is a generalization, as the nodes **301**.**1**-**301**.N can comprise server-side devices, client-side devices, relay devices (or other intermediate devices), and/or combinations thereof.

A network fabric can comprise a switched fabric, which is a network topology in which nodes **301**.**1**-**301**.N connect via one or more network switches. Switches in a switched fabric can form a mesh network. While switched fabrics are typically associated with fibre channel switched fabrics, which use fibre channel switches, aspects of the disclosure include network fabrics with wireless links between at least some of the nodes. These wireless links can be radio channels, infrared, and/or free-space optical channels.

A network topology describes the arrangement of nodes and links of a communication network, and can comprise either or both a physical topology and a logical topology. The physical topology conveys the location of each node and characteristics of the links, and can include distances between nodes, node interconnections, transmission rates, signal types, and other physical-layer attributes. The logical topology conveys the data flows within a network, which can be independent of the physical design.

In some aspects, at least some of the nodes **301**.**1**-**301**.N in the network fabric can comprise aerial platforms, such as unmanned aerial vehicles (UAVs). By way of example, mobile radio communication services (such as a radio access network (RAN)) can be provided by using a network fabric comprising UAVs configured for network fronthaul and/or backhaul operations. The use of such mobile aerial platforms can be advantageous when there is a need to quickly deploy a radio network and/or dynamically adapt to changing user-demand topologies.

With the use of broadband data links between nodes in an aerial network fabric, such as can be implemented via short-range wideband radio, infrared, and/or free-space optical links, data rates over the network fabric can be commensurate with computer bus speeds. Not only can the aerial network fabric serve as the fronthaul and/or backhaul to enable the RAN's data transport, the aerial network fabric can serve as a computing bus that connects computing elements (and other resources) residing on different network nodes to support other applications.

In one aspect, each node **301**.**1**-**301**.N manages its contribution of shared resources for performing at least one other application while performing its RAN data transport duties. The other application(s) could include remote sensing or other various environment-monitoring operations, transcoding or other various media-processing operations, network security operations, content delivery management, client-device services (e.g., cloud storage, cloud computing, software-as-a-service, navigation, etc.), and/or RAN-supporting applications (e.g., Cooperative-MIMO, error detection/correction, coding/decoding, etc.).

Each application can comprise a combination of a routing topology, a storage topology, and a computation topology. In one aspect, one or more of the networks **301**-**305** corresponds to a topology for a particular application. By way of example, a storage topology can comprise storage devices distributed across multiple network nodes, and the storage topology can comprise a routing topology that is specific to accessing the storage devices for cloud storage on the multiple network nodes. The routing topology for cloud storage is typically different than the routing topology for RAN data transport. Thus, each node may comprise separate routing cores dedicated to different routing topologies. Similarly, each node may comprise separate storage devices, such as one set dedicated to RAN data transport and another set dedicated to a cloud storage application.

By way of example, a computation topology can comprise computing elements distributed across multiple network nodes. In one aspect, such as depicted in FIG. **3**, a system of resources **311** (such as a network of nodes) can be abstracted as a single node in a given topology. In some aspects, virtual nodes **311**.**1**-**311**.N (where N represents the number of virtual nodes) are an abstraction that conceals a corresponding underlying physical architecture, which can comprise multiple hardware components communicatively coupled together. The hardware components of a virtual node **311**.**1**-**311**.N might change during an application, such as to scale to demand for various resources (e.g., computational processing, memory, routing, etc.). Similarly, the network topology **315** might change for any of various reasons. In some aspects, the network **315** is a hidden (or concealed) network, such as a Tor network. In one aspect, a gatekeeper node (such as node **311**.**9**) indicates the availability of certain services to the other nodes **301**.**1**-**301**.**8** or to specific applications while concealing from those nodes **301**.**1**-**301**.**8** or applications information as to how those services are acquired or arranged. In some aspects, certain services are

only available to nodes within a subnetwork and are concealed from nodes outside the subnetwork. In some aspects, the network **315** comprises a virtual network overlay to a physical network. In some aspects, a virtual node **311.1-311**.N (and/or network) may comprise nodes **301.1-301.8** (and/or components thereof), groups of nodes **301.1-301.8**, other network resources, and/or subnetworks **301-305** (or portions thereof).

The computation topology for one application, such as RAN data transport, can be different from the computation topology used for another application. Furthermore, the computation topology can comprise a storage topology and a routing topology that are different for each application. Thus, a distributed application can employ a topology comprising dedicated apparatus-level components on different nodes **301.1-301.9**, but operating together to support the application's requirements. Each instantiation of the distributed application can comprise a unique set of the apparatus-level components, and thus may employ a corresponding unique topology.

In accordance with certain aspects, a distributed computing problem can be partitioned by a combination of processes, including (but not limited to) data partitioning and computation partitioning. A first network topology can be provisioned to perform a first one of the processes and a second network topology can be provisioned to perform a second one of the processes. By way of example, the first network topology is configured to perform processing associated with data partitioning, and the second network topology is configured to perform processing associated with computation partitioning. Computation processing can be further partitioned into tasks which may be provided with their own network topologies. It should be appreciated that network topologies can be tiered. For example, a topology corresponding to a data partition may comprise multiple subnetwork topologies corresponding to computation partitions, and a computation partition may include further partitions implemented by corresponding subnetworks. It should also be appreciated that subnetwork topologies can overlap, and a device or network configured to operate in one network topology may be configured to perform (simultaneously, or in alternative time intervals) processing corresponding to another network topology. As network topologies can comprise overlapping and/or tiered topologies, in some aspects, solutions provided by a set of subnetwork topologies can be processed by a processors in an encompassing network topology, and processors in the subnetworks can be directed to a next problem in a queue and/or redirected to solve different problems. In some aspects, network topologies can be adapted, such as to adapt to corresponding processing needs. In some aspects, the topologies change as problems are completed and/or processing for new problems is commenced.

Due to the deployment of multiple UAVs to provide fronthaul and/or backhaul support for the RAN, a system for managing navigation is typically employed, which can include various combinations of centralized and decentralized air traffic control. One promising technique uses swarm intelligence.

Swarm intelligence refers generally to the collective behavior of multi-component systems that coordinate using decentralized controls and self-organization. From an engineering point of view, swarm intelligence emphasizes the bottom-up design of autonomous distributed systems that can provide adaptive, robust, and scalable behaviors. While conventional distributed air traffic control techniques provide only navigation management (e.g., collision avoidance, maintaining safe aircraft spacing, optimal routing, etc.), aspects of the invention introduce network fabric processing criteria into the navigation decision-making process. Thus, navigation may be adapted to desired network topologies for various applications. Such adaptations to a UAV's navigation decision-making may take the form of self-organizing control signals, control signals from a UAV acting as a cluster leader or local master, and/or from a ground-based processing system providing for coordinated multipoint control.

By way of example, in a MIMO wireless communication system, the arrangement of scatterers in the transmission channel affects the system's capacity (e.g., L. Hanlen, M. Fu, "MIMO Wireless Systems: Capacity Limits for Sparse Scattering," 3rd AusCTW, Canberra, Australia, February 2002, which is incorporated by reference in its entirety). Thus, UAV navigation can be configured to employ techniques to arrange active scattering platforms in a manner that enhances system capacity. In some aspects, it is recognized that UAVs can act as passive scatterers of RAN transmissions. In such aspects, UAV navigation can be adapted to produce any of various scattering structures, such as mirrors, lenses, and waveguides. These scattering structures can comprise active scattering structures, passive scattering structures, or combinations thereof.

In some aspects, swarm intelligence is configurable with respect to additional criteria, such as the aforementioned Cooperative-MIMO processing, network topology control, scattering management, and the like. For example, local navigation decision-making may be adapted to produce complex scattering structures. In some aspects, local navigation decision-making can be adapted to produce or shape a network topology. In such aspects, the local rule base employed for navigation by each UAV can be adapted such that complex structures and/or topologies can be achieved with minimal or no centralized control. In other aspects, at least a small amount of centralized control, whether from a ground-based controller or an airborne cluster master, may provide for at least some navigation control. Such centralized control and management can be configured with other control and management activities. By way of example, such centralized control may be configured with timing management operations, such as disclosed in the other patents and patent applications which are incorporated by reference. Thus, aspects of the disclosure include devices, methods, and cooperating systems of devices configured for performing aerial fabric acrobatics.

In accordance with aspects of the disclosure, precoding aspects (including devices, device components, systems of devices, methods, and instructions for configuring a processor(s)) are disclosed herein for use in a variety of network configurations, including cellular networks (such as LTE networks), WPANs, WLANs, ad-hoc peer-to-peer networks, and multi-hop networks, to advanced network configurations, such as any of the variety of Cooperative-MIMO networks and airborne networks disclosed herein. It should be appreciated that aspects disclosed herein, including the precoding aspects, can be configured for any type of wireless network mentioned in any of the references incorporated herein.

FIG. **4**A is a block diagram of a spread-OFDM transmitter in accordance with an aspect of the disclosure. A baseband data processor **401** generates original data symbols from user data, reference signals, or some combination thereof. A spreader **402** spreads the original data symbols into spread data symbols. A mapper **403** maps the spread data symbols to OFDM subcarriers, such as to input bins of an over-

sampled inverse discrete Fourier transform (IDFT) **404**, which is typically implemented as an oversampled fast transform (e.g., an FFT). The spread-OFDM signal output from the IDFT **404** is prepended with a cyclic prefix (in "+CP" circuit **405**) before amplification and up-conversion to RF in an RF front end **406**. Inter-symbol interference can be avoided if the cyclic prefix (or a guard interval) is longer than the delay spread of the impulse response of the channel.

In spread-OFDM, N subcarriers can be shared by every original data symbol in a block of up to N original data symbols if the spreading codes are configured to be orthogonal. The spreader **402** enables the N subcarriers to be shared by a block of up to N original data symbols. In one aspect, the function of the spreader **402** can be explained as follows: Each original data symbol of the block is replicated into N parallel copies. Each copy is then multiplied by a code chip from a corresponding spreading signature. A spreading signature can comprise a row or column of a spreading matrix, and may be referred to as a spreading code or a code space. The products are summed such that each sum (referred to as a spread data symbol) comprises one of N linear combinations of the original data symbols, wherein the coefficients are the code chips (e.g., a row or column of a corresponding spreading matrix), and the unknowns are the original data symbols. Each spread data symbol is modulated onto one of the N subcarriers, all of which are to be transmitted in parallel. The usual implementation of OFDM calls for the IDFT **404** to convert the parallel chips into serial form for transmission. In OFDM, the IDFT **404** is typically implemented via oversampling, so the input symbol block to the IDFT **404** is typically zero-padded, since zero padding in one domain (e.g., time or frequency) results in an increased sampling rate in the other domain (e.g., frequency or time). The cyclic prefix is appended to remove the interference between successive symbols and to accommodate the circulant convolution provided by the FFT.

In a receiver configured to receive spread-OFDM signals (such as the receiver block diagram depicted in FIG. **5**A), a received spread-OFDM transmission is filtered, converted to baseband, and digitized by an RF front end **501**, and then the cyclic prefix is removed (such as by a cyclic prefix removal circuit **502** or some equivalent). The receiver can comprise N matched filters, which can be implemented in the discrete baseband domain, such as by performing a DFT **503**. The output of the DFT **503** has the form of the transmitted signal multiplied by a diagonal channel matrix whose diagonal values are flat-fading coefficients, which allows for simple equalization **504**. The IDFT **404** and DFT **503** operations and the role of the cyclic prefix are implicitly absorbed through the diagonal structure of the channel response. Thus, aspects of the disclosure can provide for configuring the spreader **402** to provide various benefits, including (but not limited to) orthogonal codes, use of a fast-transform algorithm, and low PAPR.

In accordance with some aspects of the disclosure, a processor-based transceiver can include a non-transitory computer-readable memory with instructions stored thereon and configured to perform any of the algorithms disclosed herein. In reference to the spreader **402**, by way of example, each original data symbol in a block can be multiplied by a complex-valued spreading code, such as via a matrix multiplication operation. For example, a jth original data symbol d_j is multiplied by a jth column vector of an N×N spreading matrix S, where the jth column vector corresponds to the spreading code for symbol d_j, and N (which equals the number of subcarriers onto which the spread data is modulated) corresponds to the bandwidth expansion factor (e.g., spreading gain) to produce a jth spread data-symbol vector. The N different spread data vectors are summed to produce a vector of spread data symbols (of length N) before serial-to-parallel conversion and processing by the IDFT. It should be appreciated that if fewer than N original data symbols (e.g., n<N) are in a block, then N−n of the symbols in the block may be set to zero while still producing a length-N vector of spread data symbols.

FIG. **4**B is a block diagram of a spread-OFDM spreader (such as spreader **402**) in accordance with some aspects of the disclosure. An OFDM schedule processor **431** receives scheduling information which assigns a set of OFDM subcarriers to the corresponding transmitter. For example, if the transmitter is a UE, then the OFDM network assigns specific resource blocks (which includes a set of OFDM subcarriers) to be used by the UE for uplink transmissions. The OFDM schedule processor **431** obtains subcarrier parameters (e.g., number of subcarriers N, subcarrier spacing, and the like) which are conveyed to a spreading code generator **432**.

The spreading code generator **432** can be configured to process the subcarrier parameters and one or more criteria elements to select spreading codes. For example, the criteria can include code space orthogonality (i.e., orthogonal spreading codes), low PAPR, and enabling a fast transform operation for code generation and/or for encoding original data symbols. Other criteria may be employed. For example, a criterion which relates to pulse shaping (e.g., time-domain and/or frequency-domain shaping, or windowing) can further reduce PAPR by sacrificing some bandwidth efficiency. In one aspect, a mask (e.g., a spectral mask) may be applied to the subcarriers, such as by way of the coding or directly following the coding, in order to shape the spread-OFDM signal. This can achieve pulse shaping without directly processing the output of the IDFT **404**.

In one aspect, spreading is achieved via a fast transform operation (such as an FFT spreader **433**). The FFT spreader's **433** input parameters can be controlled by the spreading code generator in accordance with the criteria elements. In one aspect, FFT spreader **433** parameters, such as FFT size, input data block size, input data values, can be controlled by the spreading code generator **432**. In some aspects, the spreading code generator **432** can select how a fast transform is performed, such as by directly controlling the transform's operations or by indirectly controlling the transform via FFT size, and the like.

In one aspect, a user data processor **435** provides user data symbols to the spreader **433** for spreading. In another aspect, a reference signal data processor **437** provides reference signal data symbols to the spreader **433** for spreading. In some aspects, the user data processor **435** and the reference signal data processor **437** are configured to multiplex user data and reference signal data to produce the original data symbols, which are then spread by the spreader **433** to produce the spread data symbols.

Orthogonal Spreading

In accordance with an aspect of the disclosure, in a client device (such as a UE) configured to operate in an OFDM network, the spreading-code generator **432** is responsive to OFDM scheduling that assigns a particular set of uplink subcarriers to the client device, such as based on favorable channel conditions between the client device and one or more base transceiver stations. For example, channel-dependent scheduling of the uplink subcarriers to the client device can be made to avoid interference, such as deep fades experienced by one or more subcarrier frequencies in a flat-fading environment, and/or interference caused by other transmitters. Responsive to the number of assigned uplink

subcarriers, the spreading-code generator **432** selects a set of orthogonal complex spreading codes. Orthogonal functions (that is, signals or sequences) have zero cross-correlation. Zero correlation occurs if the product of two signals summed over a period of time (or sequence length) is zero. A set of signals or sequences in which all have zero cross-correlation with each other constitutes an orthogonal code space(s).

In one aspect, responsive to an assignment of N OFDM subcarriers, the spreading-code generator **432** selects an orthogonal N×N complex spreading matrix that comprises DFT coefficients. Some matrices comprising DFT coefficients are not orthogonal. While it is well known that some orthogonal functions can be generated or expanded using various algorithms, such as a seed algorithm or some other recursive technique, some of these algorithms do not provide codes with desirable features, such as orthogonality and low PAPR. For example, an N×N spreading matrix constructed by concatenating rows or columns of an N/2×N/2 DFT spreading matrix can yield fewer than N orthogonal spreading codes. Similar deficiencies result from concatenations and other combinations of different-size DFT matrices, permutations of DFT matrices, punctured DFT matrices, truncated DFT matrices, and the like. Thus, in some aspects, the spreading-code generator **432** advantageously provisions an N×N spreading matrix (or corresponding set of complex codes) to provide for N orthogonal spreading codes. This can be referred to as an orthogonal code space with dimension N.

In some aspects of the disclosure, the spreading-code generator **432** can orthogonally spread a block of up to N original data symbols with DFT-based complex spreading codes to produce a length-N vector of spread data symbols. In other aspects, the spreading-code generator **432** can employ complex spreading codes to spread N'>N original data symbols onto N subcarriers. While these complex spreading codes are not all orthogonal, the codes can be configured to have low cross correlation. Various techniques may be employed to select a code set having optimal features, such as low cross correlation, low PAPR, or a combination thereof. In some aspects, at least some of the spreading codes can be orthogonal to each other.

Low PAPR

In addition to providing for orthogonal spreading, the spreading code generator **432** can be responsive to OFDM scheduling to configure the complex spreading matrix to provide the spread-OFDM signal with a low PAPR. Unlike other PAPR-reduction techniques (such as clipping, peak cancellation, and others) which employ the IDFT **404** output (i.e., the spread-OFDM signal), the spreader **402** employs complex orthogonal spreading codes to spread original data symbols (which provides frequency diversity gain) while shaping the spread-OFDM signal to provide low PAPR.

Parameters of the assigned subcarriers, such as subcarrier frequency spacing and the number of subcarriers, can be used to determine complex orthogonal spreading codes that also produce a low-PAPR signal at the IDFT output. By way of example, the spreading-code generator can generate an orthogonal N×N spreading matrix wherein N is the number of subcarriers assigned to the transceiver, and the complex values of the spreading matrix can be generated based on the configuration of the assigned subcarriers, such as frequency spacing.

In one aspect, responsive to an assignment of a block of contiguous subcarrier frequencies, the spreading-code generator **432** can generate a complex spreading matrix with constant-modulus (e.g., constant magnitude) polyphase values derived from a DFT. In another aspect, if the subcarrier assignment comprises non-contiguous subcarriers with different frequency spacings, the complex spreading matrix that provides for low PAPR might comprise values with different magnitudes. Even in such aspects, the spreading-code generator **432** can generate a complex spreading matrix which achieves desired features corresponding to the criteria list, including low PAPR.

Fast Transforms

In accordance with some aspects of the disclosure, in a client device (such as a UE) configured to operate in an OFDM network, the spreading-code generator **432** is responsive to OFDM uplink scheduling to employ a complex spreading matrix that can be implemented via a fast transform algorithm. For example, based on a number of assigned OFDM subcarriers, an N×N complex spreading matrix can be selected in which the matrix-generation algorithm exploits the factorization of N. In some aspects, the number of assigned OFDM subcarriers equals N. In other aspects, a spreading matrix with dimension less than the number of assigned OFDM subcarriers might be selected, such as to facilitate spreading with a small sacrifice in data bandwidth, enable further PAPR reduction, or provide for other benefits. In some aspects, the scheduling is configured by the OFDM network such as to provide a number of assigned subcarriers that facilitates use of a fast transform algorithm by the spreading-code generator **432**.

The implementation of the DFT spreading as a fast algorithm (e.g., an FFT) can provide an efficient alternative to conventional Carrier Interferometry (CI) coding. In some aspects, an OFDM transceiver can employ the same FFT processor (e.g., such as FFT spreading module **433**, which can be an application-specific processor, a general purpose processor programmed to perform an FFT, or some other hardware configured to perform an FFT) and/or reuse a software program configured to perform spreading to perform other transceiver functions, such as OFDM modulation (e.g., IDFT **404**) and/or demodulation (e.g., DFT **503**). In such aspects, a common FFT hardware (e.g., module **433**, **404**, **503**, or **505**) or software module (e.g., program, object, function, or some other program construct) can be configured to adjust FFT processing parameters, such as relative to whether the FFT is being used for spread-OFDM coding, spread-OFDM decoding, OFDM modulation, or OFDM demodulation. FFT processing parameters can include one or more of oversampling factor, sampling rate, FFT length, zero-padding, truncating, modulo-length data wrapping, Radix-2 implementation, FFTW implementation, decimation in time, decimation in frequency, output ordering, input data format, rounding mode, saturate on integer overflow, sine table data type, product output data type, accumulator data type, output data type, output minimum, output maximum, and lock data type. Other FFT processing parameters can be employed.

A fast DFT algorithm, such as the Cooley-Tukey algorithm, can express a DFT of size $N=N_1N_2$ in terms of smaller DFTs of size N_1 and N_2 recursively to reduce the computation complexity to order of N log N for highly composite N (e.g., smooth numbers). The 2-smooth numbers are powers of 2 (i.e., a number of the form 2^n where n is an integer). Radix-2 implementation can comprise various algorithms, including (but not limited to) butterfly operation, double-signal algorithm, half-length algorithm, decimation-in-time algorithm, and decimation-in-frequency algorithm.

Since the Cooley-Tukey algorithm breaks the DFT into smaller DFTs, it can be combined with other DFT algorithms. For example, Rader's algorithm, Bluestein's algo-

rithm, Bruun's algorithm, or other FFT algorithms can be used to handle large prime factors that cannot be decomposed by Cooley-Tukey, or the prime-factor algorithm can be exploited for greater efficiency in separating out relatively prime factors.

In many OFDM systems, the number N of subcarriers assigned to a transceiver is commonly a power of 2, which enables efficient OFDM modulation and demodulation. Thus, a radix-2 FFT of size N for DFT coding can also provides notable computational advantages. A processor for an OFDM transmitter configured to perform an IFFT, for example, can be easily configured to perform fast DFT spreading. Accordingly, some aspects of the disclosure employ a radix-2 DFT matrix to spread data symbols. This enables computationally efficient spreading, and like CI spreading, when the spread-DFT data is input to selected bins of an IFFT used in an OFDM transmitter, the resulting spread-DFT OFDM signal can have a low PAPR.

In accordance with some aspects of the invention, in an OFDM transmitter apparatus, a radix-2 DFT spreader (e.g., spreader **402**) and the subcarrier mapper **403** are configured in a manner such that the combination of DFT spreading and subcarrier allocation produces a transmitted OFDM signal with low PAPR. By way of example, the size N can equal the number of subcarriers allocated to the OFDM transmitter apparatus, and wherein the allocated subcarriers are uniformly spaced in frequency. The allocated subcarriers can comprise a block of contiguous subcarriers, such as may be assigned to the OFDM transmitter apparatus based on favorable channel conditions between the OFDM transmitter apparatus (e.g., a UE) and at least one server-side WWAN terminal (e.g., a base transceiver station). A determination of favorable channel conditions may be made by either or both the OFDM transmitter apparatus and the at least one server-side WWAN terminal (including a scheduler communicatively coupled to multiple WWAN terminals) and may be based on measurements and/or estimates of the channel at either or both the OFDM transmitter apparatus and the at least one re server-side WWAN terminal.

A processor for an OFDM receiver configured to perform an FFT, for example, might be configurable to perform the DFT spreading. In some aspects, the receiver processor does not normally operate while its associated transceiver device is in transmit mode, so the receiver's FFT is available to support transmit processing, such as to provide for the DFT spreading. In some aspects, the transmitter may employ the same processor to perform both DFT spreading and the IFFT. Such implementations can provide various benefits (e.g., reduce complexity, improve efficiency, reduce cost, reduce power consumption, etc.) by employing the same hardware to perform both spreading and OFDM modulation. With regard to software, such implementations disclosed herein can enable code reuse. In some aspects, pipelined FFT processing can be provided. By way of example, pipelined processing can be configured to provide multiple simultaneous FFT operations, such as DFT-spreading and subcarrier modulation (e.g., via IFFT). In some aspects, pipelined processing can be performed as part of cooperative processing between multiple processing cores (such as in a data center), or residing on different WWAN terminals (e.g., UEs and/or base transceiver stations) in a cooperating cluster.

In accordance with other aspects of the disclosure, an FFT processor configured for at least one transmitter operation can be configured for a receiver operation. In some aspects, a single FFT processor can be employed to enable multiple operations, including any combination of OFDM modulation, OFDM demodulation, DFT spreading, and DFT de-spreading.

In accordance with some aspects of the disclosure, the block diagram shown in FIG. **4**A comprises the transmitter part of a UE configured to transmit an uplink spread-OFDM signal with low PAPR, and the block diagram in FIG. **5**A comprises the receiver part of a server-side WWAN device (or system) configured to receive the UE's uplink spread-OFDM signal. In the server-side WWAN device (or system), an RF front-end system **501** filters, amplifies, down-converts, and digitizes the received spread-OFDM signal to produce a received baseband signal. The cyclic prefix is stripped (in "-CP" circuit **502**) and the OFDM signal is demodulated by the DFT **503**. Equalization and demapping **504** (which can include soft and/or hard decision processing) produces received spread-OFDM symbols. The de-spreader **505** can comprise an IFFT to efficiently de-spread DFT-spread symbols to produce estimates of the original data symbols. The baseband processor **506** performs additional down-stream baseband processing on the estimates, such as error detection, error correction, transcoding, formatting, and/or other post-processing operations.

FIG. **5**B is a block diagram that depicts a portion of a receiver, such as a receiver that may be employed in a server-side WWAN terminal or system. In one aspect, the de-spreader **505** comprises the system shown in FIG. **5**B. A de-spreading code generator **552** processes subcarrier parameters corresponding to the received spread-OFDM signal to control decoder **553**. Since the server side of the WWAN can schedule the uplink OFDM subcarriers used by each UE, the subcarrier parameters can be retrieved from a UE scheduler **551**.

In some aspects, the UE scheduler **551** assigns uplink subcarriers to a UE based on favorable channel conditions for that UE (which is referred to as channel-dependent scheduling). In addition to favorable channel conditions, a criteria list employed by the UE scheduler for assigning uplink subcarriers might include providing for orthogonal spreading codes, enabling spreading codes that produce a transmitted spread-OFDM signal with low PAPR, and/or enabling a fast transform to be used for spreading and de-spreading. While channel-dependent scheduling might identify a particular group of candidate subcarriers to be assigned to a UE uplink channel, the other criteria can specify the number N of subcarriers, the subcarrier spacing, as well as other signal parameters assigned by the scheduler **551**. For example, selecting N to be a power of 2 can enable certain fast transforms to be used in spreading and/or de-spreading. Selecting contiguous subcarriers or uniformly spaced subcarriers can facilitate (and possibly ensure) the UE's implementation of orthogonal spreading codes that provide low PAPR features.

In one aspect, a de-mapped data processor **555** can provide spread data symbols comprising spread user data symbols, spread reference signals, or both to the decoder **553**. The decoder **553** can employ a fast transform, such as an IFFT, to de-spread the spread data symbols and produce de-spread data symbols which are output for further processing. The de-mapped data processor **555** may be part of the equalizer and de-mapper **504** or it may be part of the de-spreader **505**.

DFT-Spreading Method:

In accordance with one aspect of the disclosure, as depicted in FIG. **6**A, a method performed in a radio transceiver is provided, which can employ a fast algorithm to generate a spread data sequence from an original data

sequence. The algorithm which generates the spread data sequence is configured to provide a low PAPR to an OFDM signal modulated with the spread data sequence. Specifically, the spreading causes the transmitted OFDM signal (such as a signal output from IDFT **404**) to have a low PAPR compared to an un-spread OFDM signal (such as the resulting transmitted OFDM signal if spreading is not performed).

In some aspects, the method depicted in FIG. **6**A comprises functional steps implemented via software instructions operable to cause a processor (such as a general-purpose processor) to execute the steps in a process which produces a spread-OFDM signal. In some aspects, one or more of the functional steps are embodied in hardware, such as circuits.

By way of example, application-specific integrated circuits (ASICs), field-programmable gate arrays (FPGAs), and/or other circuits can be provided as embodying one or more of the functional steps disclosed throughout the specification and depicted in the drawings. In some aspects, multiple ones of the functional steps can be implemented by a common processor or circuit. For example, certain efficiencies might be achieved by configuring multiple functional steps to employ a common algorithm (such as an FFT and/or some other algorithm), thereby enabling a circuit, a processor, or some other hardware component to be used for different functions, and/or enabling software instructions to be shared for the different functions.

The radio transceiver, such as a UE, receives an OFDM channel assignment **601** from a scheduler in the WWAN. For example, OFDM channels in the WWAN might be assigned via channel-dependent scheduling. The OFDM channel assignment is processed to acquire OFDM subcarrier parameters pertinent to operation of the transceiver **602**. Based on the subcarrier parameters, orthogonal spreading codes are configured in a manner to cause a corresponding spread-OFDM signal to have low PAPR **603**. For example, the spread-OFDM signal is configured to have a lower PAPR than if spreading was not performed. Configuring the spreading codes in accordance with step **603** can comprise a combination of a) determining a spreading code length(s) based on the number of subcarriers assigned to the transceiver; b) determining spreading code values based on the spreading code length(s) and the configuration of subcarriers (e.g., subcarrier spacing) assigned to the transceiver; and c) arranging the spread data symbols (which can include re-ordering the output of a spreading function) in a particular order or arrangement such that each spread data symbol maps to a particular one of the assigned subcarriers to achieve at least one objective, such as to provide the spread-OFDM signal with a low PAPR.

In aspects of the disclosure, one or more spreading code parameters (such as code length) can optionally be configured to enable use of a fast spreading algorithm, such as an FFT, to perform spreading **604**. In other aspects, the spreading codes may be retrieved from a memory and employed in a matrix multiply or equivalent operation. For example, spreading codes might be generated for different subcarrier parameters (e.g., number of subcarriers, subcarrier spacing, and the like), possibly using a fast spreading algorithm, and stored in the memory. Then spreading codes corresponding to particular subcarrier parameter(s) can be retrieved from the memory to be used in spreading **604**.

Code parameters, such as code length and the code values, can be selected to allow a fast algorithm (such as the FFT) to be used for spreading-code generation and/or to spread original data symbols, such as via a fast transform. This can include selecting a block size of input original data symbols (and corresponding spreading matrix dimension) to facilitate use of a fast transform and/or achieve other processing efficiencies. In some aspects, zero values can be added to the block of original data symbols to provide a predetermined block size.

By way of example, but without limitation, a spreading code matrix can comprise complex spreading codes selected from a larger set of spreading codes, such as CI codes, which are complex spreading codes that exist for any code length. For example, restricting the code length (or matrix dimension) N to a length that is a power of 2 enables a specific set of spreading code values that permit a fast transform algorithm (such as a radix-2 decimation-in-time (DIT) FFT) to be employed as the spreading algorithm **604**. In other aspects, N can be selected to equal a product of small prime numbers which can include numbers other than 2.

Selecting the code length and the code values (such as specific code values corresponding to particular OFDM subcarriers assigned to the radio transceiver) can provide for configuring the spreading code **603** to produce a spread-OFDM signal (at the output of step **606**) with low PAPR. For example, in one aspect, an OFDM network might employ non-contiguous blocks of subcarriers (such as for opportunistic transmissions, cognitive radio applications, channel optimization, and/or for other purposes). Thus, the code values (and optionally, the code length) can be selected **603** to provide a low PAPR to the resulting transmitted OFDM signal. The code values and code length can also be selected to affect the orthogonality of the codes as part of step **603**, such as to provide orthogonal codes, sacrifice orthogonality for lower PAPR, sacrifice bandwidth efficiency for lower PAPR, or some combination thereof.

The spread data symbols are mapped to particular OFDM subcarriers **605**. In some aspects, mapping **605** comprises sequence reordering to map specific spread symbols to specific subcarriers, which can achieve certain advantages. For example, a preferred mapping of the spread data symbols to the OFDM subcarriers achieves the low PAPR, whereas an alternative mapping may not. Even when contiguous subcarriers and spread-DFT or CI codes are employed, the selection of the spreading codes **603** and the mapping **605** affects the PAPR. A proper mapping **605** of the spread data symbols to specific subcarriers achieves the low PAPR.

In one aspect, besides the trivial case of all ones, a spread-DFT code (which is a constant-modulus complex code) can be regarded as comprising a uniform phase increment in the complex plane from one code value to each successive value in the DFT code vector. In the trivial case, the phase increment is zero. Each spread data symbol comprises a sum of the products of each original data symbol with a code value from the original data symbol's corresponding spread-DFT code. This spreading can be implemented via a matrix multiply, such as between a spreading code matrix and a vector of original data symbols. The spreading can be implemented via a DFT, such as an FFT. However, the spread data symbols are markedly different from the frequency responses derived from a spectrum analyzer, which also uses a DFT.

Each spread data symbol comprises a linear combination of the original data symbols, wherein each coefficient in the linear combination comprises the code value corresponding to the original data symbol's code and a common location in the code vector of that code. Stated another way, consider an nth original data symbol d_n spread by a corresponding n^{th} DFT spreading vector $c_n=[c_{n1}, c_{n2}, \ldots, c_{nm}, \ldots, c_{nN}]$. An mth spread data symbol in a spread data symbol vector x is

the sum, $x_m=\Sigma_{n=1}^{N}c_{nm}s_n$, which indicates that the mth spread data symbol is the sum of each data symbol s_n multiplied by the mth code value in its corresponding code vector c_n. The mth code value c_{nm} represents the mth uniform phase increment in the complex plane for that code c_n. Thus, the mth spread data symbol can be associated with an mth set of uniform phase increments. Spreading yields N spread data symbols, whereas spectrum analysis (which uses a DFT) produces frequency responses corresponding to N/2 (orthogonal) tones due to the Nyquist limit.

In one aspect, the mapping **605** comprises arranging the spread data symbols in accordance with increasing uniform phase increments, and matching the spread data symbols according to this arrangement to a set of OFDM subcarriers having increasing uniform frequency increments. The mapping **605** of the spread data symbols having increasing uniform phase increments to the OFDM subcarriers with corresponding increasing frequency increments provides for producing a spread-OFDM signal with low PAPR. In serial implementations, arranging the spread data symbols can take the form of sequencing the symbols in ascending or descending order relative to their corresponding phase increments. In parallel implementations, arranging the spread data symbols can take the form of arranging the symbols relative to input bins of an IFFT for corresponding increasing OFDM subcarrier frequencies. Thus, in some aspects, the mapping **605** can comprise sequence reordering of a DFT output.

In some aspects, the mapping **605** order of symbols to IFFT bins may be fixed. Thus, configuring the spreading codes **603** and/or spreading **604** may be provisioned to configure the mapping **605** which ensures a low-PAPR spread-OFDM signal. For example, configuring the spreading codes **603** can comprise arranging the order of values in a spreading code matrix to produce a vector of spread symbol values arranged in a manner that the fixed mapping **605** results in a spread-OFDM signal with low PAPR, the order relating to a mathematical relationship with the subcarrier frequencies that achieves the low PAPR regardless of the arrangement of the original data symbols. In another aspect, the spreading **604** is configured to arrange the spread data symbols in a manner that the mapping **605** results in a spread-OFDM signal with low PAPR regardless of the order of the original data symbols.

In accordance with some aspects of the disclosure, such as in relationship to methods, software instructions, and devices which perform step **603**, the code length N can correspond to a number of OFDM subcarriers allocated to the radio transceiver. For example, the code length N might equal the number of OFDM subcarriers, which is commonly a power of 2. In some aspects, the code length N might be less than the number of assigned OFDM subcarriers. In other aspects, the code length N might be greater than the number of OFDM subcarriers, such as a multiple thereof. In some aspects, the code length N might equal the number of OFDM subcarriers assigned as user-data channels for the radio transceiver. In some aspects, the code length N might equal the number of OFDM subcarriers assigned as reference signals for the radio transceiver. In some aspects, unlike in conventional spread-OFDM, transmitted reference signals are spread. In some aspects, the reference data can be spread with the user data.

In one aspect, an N×N spreading code matrix is selected wherein N is a power of 2 and the code matrix values are selected from the set of basic CI code values to permit use of a radix-2 FFT for spreading a set of original data symbols. The CI coding may be provided via a DFT in order to provide for DFT spreading, which can be implemented by a fast transform, such as an FFT. The input to the radix-2 FFT can comprise a block of up to N original data symbols, and the fast spreading algorithm generates N spread data symbols.

At least one of an original data sequence length and a spread data sequence length is selected to enable use of a fast DFT transform. By way of example, the original data sequence length can equal the spread data sequence length, and this length can be selected to be a power of 2, which permits a radix-2 decimation-in-time (DIT) FFT to spread the original data sequence.

It should be appreciated that in alternative aspects, the spreading code matrix need not be a square matrix. In some aspects, the spreading codes can comprise alternative complex-valued code families, and the code values and code length can be selected to permit use of a fast spreading algorithm to spread the original data symbols and provide a resulting transmitted spread-OFDM signal with low PAPR.

Various types of fast spreading algorithms can be employed to spread the original data symbols to produce spread data symbols. In some aspects, the fast spreading algorithm comprises a DFT spreading operation.

The DFT spreading operation is defined by

$$x_k = \sum_{n=0}^{N-1} s_n e^{-i2\pi nk/N}$$

Where x_k represents the kth spread data symbol, s_n are the original data symbols, and N is the length. In this example, both the index k and the index n range from 0 to N−1.

The Radix-2 DIT FFT computes the DFTs of the even indexed inputs ($s_{2m}=s_0, s_2, \ldots, s_{N-2}$) and the odd indexed inputs ($s_{2+1}=s_1, s_3, \ldots, s_{N-1}$), and then combines the results to produce the DFT-spread data sequence. For example, the Radix-2 DIT algorithm expresses the DFT-spreading of original data symbols s_n as a sum of spread even-numbered indices (n=2m) and spread odd-numbered indices (n=2m+1):

$$x_k = \sum_{n=0}^{N/2-1} s_{2m} e^{-i2\pi(2m)k/N} + \sum_{m=0}^{N/2-1} s_{2m+1} e^{-i2\pi(2m+1)k/N}$$

The common multiplier $e^{-2\pi k/N}$ can be factored out of the second sum, so the spread data symbols can be represented as:

$$x_k=x_{even(k)}+e^{-i2\pi k/N}x_{odd(k)}$$

Where $x_{even(k)}$ is the even-indexed part, and $x_{odd(k)}$ is the odd-indexed part of x_k.

Due to the periodicity of the DFT, $x_{even(k+N/2)}=x_{even(k)}$ and $x_{odd(k+N/2)}=x_{odd(k)}$. Thus,

$$x_k = \begin{cases} x_{even(k)} + e^{-i2\pi k/N} x_{odd(k)} & \text{for } 0 \le k < N/2 \\ x_{even(k-N/2)} + e^{-i2\pi k/N} x_{odd(k-N/2)} & \text{for } N/2 \le k < N \end{cases}$$

Since the "twiddle" factor $e^{-i2\pi(k+N/2)/N}=-e^{-i2\pi k/N}$, this reduces the number of these calculations by half. The spread sequence of length-N can be expressed recursively in terms of two spreading operations of size N/2 (0≤k<N/2)

$$x_k=x_{even(k)}+e^{-i2\pi k/N}x_{odd(k)}$$

$$x_k = x_{even(k)} - e^{-i2\pi k/N} x_{odd(k)}$$

This decimation operation can be performed down to the 2×2 DFT. The final outputs are obtained by a +/−combination of $x_{even(k)}$ and $e^{-i2\pi k/N} x_{odd(k)}$, which is simply a size-2 DFT.

It should be appreciated that other fast algorithms may be employed, including algorithms that exploit symmetry, remove redundant parts of a computation, and/or achieve other efficiencies, as well as other divide-and-conquer algorithms.

It should be appreciated that in practice, the actual performance of a fast algorithm depends on additional factors which affect computation speed, memory use, power consumption, and various processing overheads, such as communications between processors. In some aspects, in-place algorithms, bit reversal, data reordering, non-blocking pipelined configurations, and the like can be implemented in the fast algorithm. As such, operations of the fast algorithm can be configured to employ the required mapping that achieves the lowest possible PAPR for a given code set.

In some cases, performance metrics depend on the computing architecture employed. Thus, in accordance with some aspects of the disclosure, in addition to configuring the fast spreading algorithm **503** to improve performance on a given computing architecture, configuring the spreading code parameters to enable use of a fast spreading algorithm **501** can include selecting and/or adapting the spreading code parameters in a manner that improves the performance of the fast spreading algorithm.

In OFDM, active subcarriers are typically assigned with data symbols. For unassigned subcarriers, OFDM provides for zero-valued inputs for the IFFT (transmitter) and zero-valued outputs for the FFT (receiver). Often, conventional FFT/IFFT algorithms are not efficient due to the unwanted operations on zero values. Therefore, in some aspects of the disclosure, efficient FFT/IFFT algorithms can be employed to dynamically eliminate the multiplication and addition operations associated with deactivated subcarriers. For example, FFT pruning methods eliminate operations on input and output values which are not required. The basic concept involves determining the index of the butterflies to be chosen for computations and those to be discarded. Thus, FFT computation time can be significantly reduced by pruning the operations on zero values in the discarded butterflies. Most of these algorithms are suitable for applications with specific zero-input or zero-output pattern distributions. These types of efficient algorithms can be used in the FFT spreading and/or IFFT de-spreading operations, such as when zero-valued inputs and/or outputs are employed.

FIG. **6**B is a flow diagram that can be employed in accordance with various aspects of the disclosure, such as for processing received spread-OFDM signals. In one aspect, for example, the method depicted in FIG. **6**B is performed by a server-side device or system in a WWAN. A scheduler in the WWAN arranges OFDM assignment blocks in a manner that facilitates low-PAPR spreading **611**. Different block sizes may be allocated to accommodate different data rates. For example, if the blocks are configured such that resources assigned to a UE comprise contiguous (or otherwise equally spaced) OFDM subcarriers, then this can facilitate uplink spreading (by the UE) which achieves a low-PAPR spread-OFDM signal.

In some aspects, the scheduler arranges the OFDM assignment blocks in a manner that facilitates fast transforms to be employed for spreading (and, optionally, de-spreading) **612**. For example, the number of OFDM subcarriers in each block might be selected to equal a product of small prime numbers. In some aspects, the block sizes are configured to enable a Radix-2 DIT FFT for spreading (and optionally, a Radix-2 DIF IFFT for decoding).

As described herein and in patents and applications incorporated by reference, the uplink OFDM subcarriers can be assigned for use by the UEs **613**, such as via channel-dependent scheduling. The server-side device or system typically demodulates received uplink OFDM signals **614** by using a DFT, such as an FFT. Demodulation **614** can include equalization. In some aspects, the demodulated symbols, which are DFT-spread data symbols, are de-mapped **615**, such as via an OFDMA de-multiplexer, which separates the received uplink signals by UE. Thus, for each UE, a received uplink signal can be de-spread by determining the de-spreading codes based on the UE's channel assignment (which indicates the number of OFDM subcarriers and the subcarrier spacing) **616**, followed by employing a fast algorithm (e.g., an IFFT) configured to de-spread the spread data symbols **617**.

FIG. **7**A is a flow diagram that depicts a method for generating spread-OFDM signals in accordance with some aspects of the disclosure. Responsive to the subcarrier assignment and/or selection, the spreading code parameters can be configured to enable use of a fast spreading algorithm **701** and configured to produce a transmitted spread-OFDM signal with low PAPR **702**. The fast spreading algorithm, such as an FFT, is configured to spread the original data symbols with orthogonal spreading codes to produce the spread data symbols **703**, which are then mapped to an IFFT **704**. The IFFT modulates the spread data symbols onto the assigned (or selected) OFDM subcarriers to produce a spread-OFDM signal **705**. The spreading **703** and the IFFT **705** can each employ one or more of the FFT pruning methods, including modified FFT pruning, partial FFT pruning, split-radix FFT pruning, or traced FFT pruning. In some aspects, such as in hardware implementations of FFTs, a transform decomposition can be performed.

In accordance with some aspects of the disclosure, instead of separately calculating the spreading **703** and IFFT **705**, both transforms are combined into a single transform. In one aspect, this can be accomplished by using a unified butterfly so that the number of arithmetic operations, delays, and indexing are reduced. One approach can employ an algorithm based on a sparse matrices factorization method, such as via the Kronecker product technique. In another aspect, the spreading **703** and IFFT **705** are combined into a single fast transform that comprises a fast orthonormal unitary transform. The aforementioned techniques for spreading and OFDM modulation can also be adapted for OFDM demodulation and de-spreading operations.

In accordance with some aspects of the disclosure, non-contiguous subcarriers can be employed, such as due to assignment of non-contiguous OFDM subcarriers to the radio transceiver or due to selection of a subset of subcarriers (e.g., reference signals or user data signals) to be provided with separate coding from the rest of the subcarriers. In such aspects, one or more of the steps in FIG. **7**A can be configured accordingly. In some cases, certain trade-offs can be made between PAPR, orthogonality, and/or bandwidth efficiency.

In one aspect of the disclosure, the spread data symbols are critically sampled (one sample per information symbol/subcarrier) and grouped in information signal blocks of length N. By way of example, but without limitation, the spread data symbols are generated at the critical sampling

rate f_s=1/T, and modulated 705 onto the N orthogonal subcarriers during a time interval defined for one OFDM symbol with period N/f_s. In practice, the output of the IFFT **705** is a well-interpolated baseband signal. For example, oversampling in the time domain is usually achieved via frequency-domain interpolation, which is achieved by zero-padding the IFFT. If the oversampling rate is f_{os}=Lf_s, where L is the oversampling factor, the IDFT matrix has dimension (NL×NL). Although not shown, following block **705**, a cyclic prefix or guard interval is typically added to each OFDM symbol, followed by filtering, D/A conversion, frequency up-conversion, amplification, and possibly other radio front-end processing.

FIG. **7**B is a flow diagram that depicts a method of processing received spread-OFDM signals in accordance with some aspects of the disclosure. By way of example, the method depicted in FIG. **7**B can be performed by a server-side WWAN device or system to receive spread-OFDM uplink signals from at least one UE.

The WWAN assigns uplink OFDM subcarriers to UEs, such as via channel-dependent scheduling or some other scheduling scheme **710**. Uplink OFDM subcarriers can be scheduled dynamically, such as in response to specified bandwidth needs. Different blocks of subcarriers can be configured prior to assignment or on the fly, and in a manner that subcarrier parameters (such as the number of subcarriers and their spacing) are configured to enable orthogonal spreading codes (or at least spreading codes with low cross correlations), complex spreading codes with low PAPR, and/or coding/decoding that can utilize fast algorithms (such as FFTs).

In some aspects, a WWAN device has subcarrier parameter information available from the scheduling **710**. In other aspects, the WWAN device receives the subcarrier parameter information by some other means. In one aspect, the WWAN device reads the subcarrier parameter information transmitted in a control channel, which might include a broadcast channel containing scheduling information. In other aspects, the WWAN device reads and/or determines subcarrier parameter information from uplink UE transmissions. The subcarrier parameter information can then be used in subsequent steps or blocks, such as depicted in FIG. **7**B.

Received spread-OFDM signals are demodulated **711**. In some aspects, the subcarrier parameter information can be used to demultiplex received OFDMA signals, followed by demodulation **711** of the OFDM subcarriers corresponding to each UE. Although not shown, demodulation **711** can include RF front-end processing (such as amplification, filtering, down-conversion, ADC, etc.), cyclic prefix removal, equalization, and/or matched filtering. In some aspects, demodulation **711** can comprise spatial demultiplexing (such as MIMO subspace processing). Other types of demultiplexing may be performed. Demodulation **711** typically comprises performing an over-sampled FFT, although other types of demodulation may be employed. In some aspects, demodulated OFDM signals can be equalized, such as via frequency-domain equalization (not shown).

Estimated spread data symbols produced from demodulation **711** are de-mapped **712**. In one aspect, demodulation **711** comprises performing an FFT on all the received signals, and de-mapping **712** can comprise demultiplexing (e.g., separating the estimated spread data symbols with respect to corresponding UE). The subcarrier parameter information can be used to group the estimated spread data symbols according to their respective UEs. Demodulation **711** and/or de-mapping **712** can employ data re-ordering (e.g., symbol re-ordering and/or bit re-ordering) to facilitate de-spreading **713**.

De-spreading **713** can comprise utilizing a fast algorithm, such as an FFT, to de-spread the estimated spread data symbols. Input parameters to the de-spreading algorithm can be selected based on the subcarrier parameter information, such as to provide a correct de-spreading code length and/or appropriate de-spreading code values for de-spreading the estimated spread data symbols. Outputs from the de-spreading **713** comprise de-spread data symbols, which can be processed to generate estimates of the original data symbols. These estimates may be grouped by UE.

In one aspect, a spread-OFDM transceiver comprises a non-transitory computer-readable memory storing DFT-spread OFDM software instructions thereon and at least one processor configured to execute the DFT-spread OFDM software instructions to operate as a spread-OFDM transmitter. Such a transceiver is depicted in FIG. **9**.

In one aspect of the disclosure, FIG. **8**A depicts a set of modules, each comprising instructions stored on a non-transitory computer-readable memory and configured to instruct a general-purpose processor (such as a processor core, a server, a distributed computing system, etc.) to perform functions disclosed herein. In other aspects, one or more modules can comprise a specific-purpose processor, such as an application-specific integrated circuit or some other circuit.

A baseband modulator, which can be implemented as a software module **801**, transforms a binary input to a multi-level sequence of complex numbers in one of several possible modulation formats, including binary phase shift keying (BPSK), quaternary PSK (QPSK), 16-level quadrature amplitude modulation (16-QAM) and 64-QAM. The modulator **801** can adapt the modulation format, and thereby the transmission bit rate, to match current channel conditions of the transceiver. The output signal is referred to as original data symbols.

A spreader, which can be implemented as a software module **802** which provides spreading instructions to a processor, groups the original data symbols into blocks, each comprising N symbols. The spreader is configured to perform an N-point discrete Fourier transform (DFT) to produce a set of spread data symbols. In accordance with certain aspects of the disclosure, it is instructive to note that the DFT-spread output signal (i.e., the set of spread data symbols) differs from the customary frequency-domain representation of a spectral analysis that produces frequency responses according to tones (i.e., OFDM tones constitute the transform's basis functions). For example, the DFT-spreading output signal comprises N spread data symbols, whereas the spectral analysis produces only N/2 frequency responses, as the bandwidth of the baseband frequency response signal is limited to the range of positive frequencies, 0 to half the sampling rate (=$f_{Nyquist}$).

We begin with the definition of frequency, which Merriam-Webster Dictionary defines as the number of repetitions of a periodic process in a unit of time; the number of complete alternations per second of an alternating current; and the number of complete oscillations per second of energy (as sound or electromagnetic radiation) in the form of waves. The definition of frequency offers no distinction between a negative frequency and a positive frequency. Rather, what differentiates a negative frequency from a positive frequency relates to direction, not tone.

The mathematical representation of negative frequency can be found in the expression of physical signals as a sum

of complex exponential components. For example, the negative frequency can be seen in the representation of cosine and sine functions as the weighted sums of the corresponding exponential function:

$$\cos(\omega t)=Re\{e^{i\omega t}\}=(e^{i\omega t}+e^{-i\omega t})/2$$

$$\sin(\omega t)=Im\{e^{i\omega t}\}=(e^{i\omega t}-e^{-i\omega t})/2i$$

In discrete systems, the frequency $f=\omega/2\pi$ of an analysis interval can range from 0 to f_{sam}, or equivalently, from $-f_{sam}/2$ to $+f_{sam}/2$, where f_{sam} is the sampling frequency (i.e., the number of samples per interval). In discrete-time systems, the frequency response is constrained by the Nyquist frequency, which is half the sampling rate f_{sam}.

In general, when a sinusoid of frequency f is sampled with frequency f_{sam}, the resulting number of cycles per sample is f/f_{sam} (known as normalized frequency), and the samples are indistinguishable from those of another sinusoid (called an alias) whose normalized frequency differs from f/f_{sam} by any integer (positive or negative). Replacing negative frequency sinusoids by their equivalent positive frequency representations, all the aliases of frequency f can be expressed as $f_{alias}(n)=|f-nf_{sam}|$ for any integer n, with $f_{alias}(0)$ being the true value.

Aliasing matters when analyzing a signal, such as performing spectrum analysis, which expresses the discrete signal of N complex data symbols as a set of N/2 frequency responses, sometimes referred to as tones. Tones are defined herein in the usual and customary sense with regard to the fields of OFDM and Fourier transforms as orthogonal frequencies, e.g., spectral components. The typical analysis technique employs the smallest of the $f_{alias}(n)$ frequencies. So it is important that $f_{alias}(0)$ be the unique minimum. A necessary and sufficient condition for this is $f_{sam}/2>|f|$, where $f_{sam}/2$ is the Nyquist frequency of a system with sampling rate f_{sam}. For example, with Fourier transform analysis in a digital spectrum analyzer, it is necessary to sample the input signal with a sampling frequency that is at least twice the bandwidth of the input signal due to the Nyquist limit. The Fourier transform will then produce a spectrum containing frequencies from 0 to $f_{sam}/2$. While only N/2 frequency responses are achievable, N-point spreading disclosed herein can produce N spread data symbols.

The following software code can be used to implement DFT spreader **802** in accordance with aspects of the disclosure. By way of example, the FFTW program (such as can be found at www.fftw.org, all the descriptions and documentation described therein and the contents of the links provided, being incorporated by reference in their entireties) can be employed to compute a DFT, such as a one-dimensional DFT of size N:

```
*include <fftw3.h>
. . .
{
  fftw_complex *in, *out;
  fftw_plan p;
  . . .
  in=(fftw_complex*)    fftw_malloc(sizeof(fftw_complex)*N);
  out=(fftw_complex*)   fftw_malloc(sizeof(fftw_complex)*N);
  p=fftw_plan_dft_1d(N, in, out, FFTW_FORWARD, FFTW_ESTIMATE);
  . . .
  fftw_execute(p); /* repeat as needed */
  . . .
  fftw_destroy_plan(p);
  fftw_free(in); fftw_free(out);
}
```

To use the FFTW program, this code example is linked with the fftw3 library. The example code first allocates the input and output arrays using the fftw_malloc function.

The data is an array of type fftw_complex, which is by default a double [2] composed of the real (in [i][0]) and imaginary (in [i][1]) parts of a complex number. The next step is to create a plan, which is an object that contains all the data that FFTW needs to compute the FFT. This function creates the plan:

```
fftw_plan fftw_plan_dft_1d(int N, fftw_complex *in, fftw_complex *out, int sign, unsigned flags);
```

The first argument, N, is the size of the transform that will be computed. While the size N can be any positive integer, sizes that are products of small factors can be transformed most efficiently, such as described herein. The next two arguments are pointers to the input and output arrays of the transform. These pointers can be equal, indicating an in-place transform. The fourth argument, sign, can be either FFTW_FORWARD (−1) or FFTW BACKWARD (+1) to indicate the direction of the transform. Technically, it is the sign of the exponent in the spreading codes. While aspects of the disclosure discuss forward transforms for spreading, other aspects can employ the backward (e.g., inverse) transform for spreading. For example, an IDFT can be implemented as an IFFT to provide for spreading or generating the spreading code(s). Thus, the term DFT as used herein is meant to include its corresponding backward (e.g., inverse) transform. The flags argument is usually either FFTW_MEASURE or FFTW_ESTIMATE. FFTW_MEASURE instructs FFTW to run and measure the execution time of several FFTs in order to find the best way to compute the transform of size N.

Once the plan has been created, it can be used multiple times for transforms on the specified input and output arrays by computing the transforms via

```
fftw_execute (plan):
void fftw_execute(const fftw_plan plan);
```

The DFT results are stored in-order in the output array (out), with the zero-frequency (DC) component in out [0]. If in !=out, the transform is out-of-place and the input array (in) is not modified. Otherwise, the input array is overwritten with the transform. To transform a different array of the same size, a new plan is created with fftw_plan_dft_1d, and FFTW automatically reuses the information from the previous plan, if possible. The plan can be deallocated by calling fftw_destroy_plan (plan).

FFTW uses the standard "in-order" output ordering, meaning that the nth output corresponds to the frequency n/N (or n/T, where T is the total sampling period). In terms of positive and negative frequencies, this means that the positive frequencies are stored in the first half of the output and the negative frequencies are stored in backwards order in the second half of the output (i.e., the frequency −n/N is the same as the frequency (N−n)/N).

The output ordering of the FFT depends on the type of FFT employed, including whether the FFT is implemented in hardware or software. For example, an FFT block can output the frequency indices in linear or bit-reversed order. Linear ordering of the frequency indices requires a bit-reversal operation. Thus, in some aspects, it may be necessary for the FFT or the mapper to re-order the output, such as to provide a mapping to the OFDM subcarriers which yields the low PAPR.

In some aspects of the disclosure, spreader **802** may be implemented via the following steps. A DFT can be used to generate the spreading codes, which are then stored in memory. Based on OFDM subcarrier assignment, subcarrier parameter(s) is (are) input, and a corresponding set of codes is selected from the memory and used to spread the original data symbols, such as via a matrix multiplication operation. For example, the input vector (in) can be a kernel used by the FFTW program to generate the spreading matrix, which can then be stored in non-transitory memory, and selected thereafter (such as with respect to the number of subcarriers N, subcarrier spacing, and/or any other subcarrier parameter (s)) for use in a matrix multiplication operation with a matrix comprising the original data symbols.

In aspects disclosed herein, the input vector comprises the data symbols, wherein the vector length N can be selected to have small prime factors (which can provide certain processing performance advantages). The input data vector can be configured, such as via zero insertion and scaling, to affect the distribution and/or scaling of non-zero terms in the output vector.

In one aspect, a spreading configuration module **811** processes subcarrier parameters corresponding to resource blocks (e.g., OFDM subcarriers) assigned to the transmitter. The subcarrier parameters can be determined from scheduling information received in a control channel, such as a downlink broadcast channel in a WWAN used to communicate resource block assignments to the UEs for use in uplink transmissions. The spreading configuration module **811** might receive scheduling information or subcarrier parameters from a UE's RAN control module (not shown) configured to process network control information.

While aspects disclosed herein provide examples of uniformly spaced OFDM subcarriers, alternative spreading algorithms (which may employ a DFT) can be used to produce complex spreading codes adapted to other subcarrier topologies to provide for an advantageous combination of orthogonality (i.e., cross correlation) and low PAPR. Some of these spreading codes can be poly-magnitude as well as polyphase. In some aspects, better cross correlation can be sacrificed for improved PAPR. Bandwidth efficiency might be sacrificed to achieve better PAPR and/or orthogonality. Thus, in some aspects, various performance metrics (which can include PAPR, orthogonality, bandwidth efficiency, as well as others) can be employed in an optimization scheme in which the values of such metrics are weighted, and optimization comprises evaluating a weighted sum (or some other function) of the performance metrics.

The spreading configuration module **811** can configure (including dynamically adapting) the spreader **802** to produce the spread data symbols in accordance with the subcarrier parameter(s) and at least one spreading criterion. Spreading criteria can include objectives, such as providing a PAPR below a predetermined threshold, providing orthogonality (which can comprise an evaluation, such as whether spreading code cross correlations are below a threshold value), and enabling efficient spreading (such as via a fast transform algorithm, or other types of processing). Other spreading criteria may be employed.

By way of example, in IEEE 802.11a, the FFT size is typically 64 with a sample rate of 20 MHz. This yields a subcarrier spacing of 312.5 kHz. Of these 64 potential subcarriers, 12 of them are unused (sometimes referred to as "virtual carriers"). Of the remaining 52 subcarriers, 4 contain pilot tones, so only 48 subcarriers carry information at any given time. Instead of transmitting one original data symbol per 312.5 kHz subcarrier, the spreader **802** provides spread data symbols, each representing a linear combination of the original data symbols, which allows a portion of each original data symbol to be transmitted on all 48 or 52 subcarriers. While this IEEE 802.11a example is described, it should be appreciated that aspects of the disclosure described herein can be employed in other cases, which can include other systems.

In one aspect, the spreading configuration module **811** might configure the spreader **802** to employ a 52-point FFT to generate the spread data symbols corresponding to the reference signals plus user data signals. The resulting 52 spread data symbols are then mapped by the mapper **803** to the IFFT **804**. Since 52 has prime factors of 2, 2, 13 and 48 has prime factors of 2,2,2,2,3, the spreading configuration module **811** could configure the spreader **802** to employ a 48-point FFT to spread the user data signals and a 4-point FFT to spread the reference signals, which might provide more efficient spreading than the 52-point FFT spreading. However, employing separate spreading of the reference signals and user data signals could result in a higher PAPR. Thus, the spreader **802** might employ an algorithm that weighs the efficiency and PAPR criteria to select which spreading mode to employ. It should be appreciated that the algorithm employed by the spreader **802** can employ various additional criteria. In some cases, the additional criteria can affect the weights of the spreading criteria (e.g., efficiency and PAPR). For example, operating criteria, such as (but not limited to) the UE's transmitted signal power, modulation scheme, modulation constellation size, pre-coding, MIMO operation, etc., can affect how the spreading configuration module **811** configures the spreader **802** to spread the original data symbols. In some aspects, operating conditions, such as determined from channel state information, network traffic, network topology information, received signal strength, routing tables, and the like, can affect how the spreading configuration module **811** configures the spreader **802** to spread the original data symbols. In some aspects, the operating conditions may be measured to infer the UE's operating parameters (such as transmit power, modulation, pre-coding, etc.). In some aspects, higher PAPR might be tolerable when a small constellation size (e.g., BPSK modulation) and/or low transmit power is employed, so spreading can be configured to improve processing efficiency and/or orthogonality at the expense of allowing for a higher PAPR. When high transmission power and/or modulations that produce a high-PAPR signal are employed, there might be less PAPR budget for the spreader **802** to exploit. Thus, the spreading configuration module **811** might configure the spreader **802** to sacrifice processing efficiency and/or orthogonality in favor of lower PAPR.

In another aspect, with respect to the IEEE 802.11a example, the spreading configuration module **811** might configure the spreader **802** to employ a 64-point FFT to generate the 52 spread data symbols corresponding to the reference signals plus user data signals. For example, the spreader **802** might be configured to generate a pre-spread input of **64** pre-spread original data symbols to the 64-point FFT, wherein the pre-spreading causes the FFT output to comprise only 52 non-zero spread data symbols. The resulting 52 spread data symbols are then mapped by the mapper **803** to the IFFT **804**. It should be appreciated that aspects of spreading configuration can be used in other scenarios and in other systems to employ N-point transforms for generating fewer than N non-zero outputs, the outputs comprising spread data symbols that satisfy one or more criteria, which can include low PAPR and/or orthogonality.

In some aspects of the disclosure, instead of a fixed algorithm for computing the DFT, the spreading configuration module **811** can adapt the DFT algorithm in the spreader **802** relative to details of the underlying hardware in order to maximize performance. For example, while FFTW's planner determines the fastest way to compute the transform for the machine on which it resides, other factors that depend on the subcarrier parameters can affect the processing efficiency. Thus, the spreading configuration module **811** can interface with the planner (or perform functions of the planner) to adapt the DFT algorithm relative to specific features of the calculations that will be performed. Various features, such as DFT size, sparseness of the spreading matrix, and/or characteristics of the input data, can be employed along with information about the underlying hardware to configure the DFT algorithm. The planner produces a data structure called a plan that contains this information. Subsequently, the plan is executed to transform the array of input data as dictated by the plan.

In some aspects, pulse shaping can be performed by "windowing" the output of the spreader **802**. This can be performed as part of the spreading, or it may be performed by the mapper **803**, such as applied to inputs of the IFFT **804**. For example, a tapered window can taper the amplitudes of at least some of the spread data symbols such that the taper is applied to the edges of the allocated spectrum. Raised cosine and Gaussian filter shapes are often used, but other types of pulse shaping can be employed.

The spreader **802** and/or the mapper **803** can configure the spread data symbols by arranging their order relative to the IFFT **804** input. Output values of the FFT are appropriately mapped to OFDM subcarriers in a manner that produces a low-PAPR spread-OFDM signal (regardless of the order or values of the original data symbols). In one aspect, ordering provides for mapping spread data symbols (relative to ascending spreading-code index) to ascending subcarrier frequencies, such as wherein the zero-frequency (DC) value corresponds to the lowest subcarrier frequency, in order to provide low-PAPR spread-OFDM signal.

The mapper **803** maps each of the NDFT outputs to one of the M>N IFFT **804** bins. As in OFDMA, a typical value of M is 256 subcarriers and N=M/Q is an integer submultiple of M. Q is the bandwidth expansion factor of the symbol sequence. The result of the subcarrier mapping is a set of complex subcarrier amplitudes, where N of the amplitudes are non-zero. As in OFDMA, the M-point IDFT **804** transforms the subcarrier amplitudes to a complex time domain signal, which is the spread-OFDM signal.

The transmitter can comprise a cyclic prefix appender **805**, which inserts a cyclic prefix in order to provide a guard time to prevent inter-block interference (IBI) due to multipath propagation. In general, the cyclic prefix is a copy of the last part of the block, which is added at the start of each block. If the length of the cyclic prefix is longer than the maximum delay spread of the channel, or roughly, the length of the channel impulse response, then, there is no IBI. Since the cyclic prefix is a copy of the last part of the block, it converts a discrete time linear convolution into a discrete time circular convolution. Thus, transmitted data propagating through the channel can be modeled as a circular convolution between the channel impulse response and the transmitted data block, which, in the frequency domain, is a pointwise multiplication of the DFT frequency samples. Then, to remove the channel distortion, the DFT of the received signal can simply be divided by the DFT of the channel impulse response point-wise, or a more sophisticated frequency domain equalization technique can be implemented.

Additional baseband processing **806** can be performed. For example, pulse shaping can reduce out-of-band signal energy. In electronics and telecommunications, pulse shaping is the process of changing the waveform of transmitted pulses. Its purpose is to make the transmitted signal better suited to its communication channel, typically by limiting the effective bandwidth of the transmission. In RF communication, pulse shaping is essential for making the signal fit in its frequency band. At baseband, the time sequence of the spread-DFT signal is filtered by the pulse-shaping filter. The spectrum of the transmission is thus determined by the filter.

Digital-to-analog conversion (DAC), frequency up-conversion, and amplification are typically performed to produce a transmitted signal. In practical implementations, typical DACs use digital interpolation filtering before implementing the D-to-A conversion. By interpolating the data samples, the performance of the reconstruction filter is improved, as increasing the sampling frequency can be seen to directly reduce the analog filter requirements for alias suppression.

Interpolation in OFDM is typically performed by the IFFT **804**. Interpolators in OFDM are described in U.S. Pat. No. 6,597,745, which is incorporated by reference, wherein a transform-domain interpolation unit expands a length-N transform domain vector by inserting zeros in the length-N transform domain vector to produce a length-2N transform domain vector. This transform-domain up-sampling unit interpolates the transform domain vector.

Interpolators in spread-OFDM transmitters can be employed in various aspects of the disclosure. By way of example, interpolation is disclosed throughout U.S. Pat. No. 6,686,879 (such as illustrated in FIG. **19**), which is incorporated by reference, wherein a data sequence is serial-to-parallel converted and then modulated onto multiple OFDM subcarriers, which are provided with phase offsets to synthesize a desired pulse shape for the resulting data-modulated pulse waveform. This process of transforming a serial data stream into a sequence of data-modulated pulses is implemented using an invertible transform function, such as an IFFT. Interpolation can also be provided via pulse shaping.

Aspects of the disclosure can include any of various types of interpolation. In order to perform frequency-domain interpolation, the input data is up-sampled before IFFT **804** processing. The up-sampling can be performed by zero-padding the middle samples of the input sequence. One disadvantage of frequency-domain interpolation is the increase in the IFFT size. For this reason, the oversampling rate is often kept relatively low.

As discussed above, in accordance with certain aspects of the disclosure, DFT-spreading **802** employs an N-point DFT to spread a sequence of data symbols s(n) to produce N spread symbols, x(n), which are to be modulated onto N OFDM subcarriers. To the contrary, in spectrum analysis, the transform of a discrete signal produces frequency responses corresponding to tones. The limitation of the transform's orthonormal basis to tones discards the negative-frequency components. Whether a pair of signals have negative and positive frequencies, or they have a relative phase offset (e.g., in-phase and quadrature phase), if they have the same frequency, then they are the same tone. The basic idea behind employing a DFT on a discrete signal to calculate frequency responses corresponding to tones is that the negative frequency components of the Fourier transform

are superfluous due to Hermitian symmetry. These negative frequency components are discarded with no loss of information, leaving a complex-valued function. But in aspects of the disclosure, it is unnecessary to discard spread-DFT symbols produced by the DFT-spreading **802**.

To generate a spread-OFDM up-sampled-by-M analytic time signal (assuming N is even) from the spread symbols, x(n), a method, circuit, and/or processor, for example, according to one aspect of the disclosure can provide for performing the following steps.

1. Create an M·N-point spectral sequence $x_{int}(m)$ initially set to all zeros. In some aspects, the product M·N can be an integer power of two.
2. Assign $x_{int}(0)=x(0)$, and $x_{int}(N/2)=x(N/2)$.
3. Assign $x_{int}(m)=2x(m)$, for $1 \leq m \leq (N/2)-1$. For example, when performed by a UE, this step and the previous one can provide for mapping non-zero symbol values to the OFDM subcarriers assigned to the UE.
4. Compute an M·N-point IFFT of $x_{int}(m)$ to yield the desired M·N-length analytic (complex) $x_{c,int}(n)$ sequence.
5. Optionally, multiply $x_{c,int}(n)$ by M to compensate for the 1/M scaling factor.

In the domain of digital signal processing, the term interpolation refers to the process of converting a sampled digital signal to that of a higher sampling rate (i.e., up-sampling) using various digital filtering techniques (e.g., convolution with a frequency-limited impulse signal). In such applications, there is a specific requirement that the harmonic content of the original signal be preserved without creating aliased harmonic content of the original signal above the original Nyquist limit of the signal (i.e., above $f_s/2$, which is half of the original signal sample rate, 1/T). For example, Let X(f) be the Fourier transform of a function, x(t), whose samples at some sampling interval, T, equal the x[n] sequence. The passband bandwidth of the corresponding interpolation filter is defined by its cut-off frequency, 0.5/L, where L is the oversampling factor. In terms of actual frequency, the cutoff is ½·(1/T) Hz, which is the Nyquist frequency of the original x[n] sequence.

Bandwidth is the difference between the upper and lower frequencies in a continuous set of frequencies. The passband bandwidth is the difference between the upper and lower cut-off frequencies of, for example, a band-pass filter, a communication channel, or a signal spectrum. In the case of a low-pass filter or baseband signal, the bandwidth is equal to its upper cut-off frequency, $f_s/2$.

FIG. **8**B is a block diagram that depicts modules corresponding to processing functions that can be implemented by a computer processor programmed to perform methods in accordance with aspects of the disclosure. In accordance with an aspect of the disclosure, a server-side device or system receives spread-OFDM transmissions from one or more UEs in a WWAN. After processing by one or more RF front-ends (not shown), a server-side processor (or processors) can receive the down-converted baseband signal(s). A baseband processor(s) **821** can process the received baseband signal, typically providing ADC processing, matched filtering (e.g., pulse shape filtering), amplification, and/or possibly other baseband processing operations to produce a spread-OFDM signal(s), which possibly has a cyclic prefix. A cyclic prefix remover **822** can optionally remove any cyclic prefix. The spread-OFDM signal(s) is processed by an M-point DFT (or some equivalent time-domain to frequency-domain converter) **823** to produce spread data symbols, which may be estimates of the spread original data symbols that were transmitted on each OFDM subcarrier. In some aspects, the DFT **823** may be configured to perform frequency-domain windowing, such as via control of a windowing module **833**. A demultiplexer **824** may optionally be used to provide OFDMA demultiplexing if necessary. The spread data symbols are usually equalized by an equalizer **825** prior to despreading. However, equalization may not be necessary in certain aspects. In some aspects, the equalizer **825** may comprise a spatial demultiplexer. In some aspects, the spatial demultiplexer is configured to perform MIMO subspace demultiplexing, such as Cooperative-MIMO subspace demultiplexing.

A despreader **826** despreads the spread data symbols to produce estimates of the original (despread) data symbols. The despreader **826** can employ a fast transform algorithm, such as an IFFT, which can be implemented with the FFTW software. The despreader **826** is controlled by a despreading configuration module **836**, which can receive one or more subcarrier parameters corresponding to the OFDM subcarriers assigned to a particular UE(s). Subcarrier parameters, which can include number of subcarriers, subcarrier spacing, and the like, provide an indication of spreading parameters (and thus, despreading parameters), which the despreader **826** can use to despread received spread data symbols. In some aspects, subcarrier parameters are understood to comprise spreading (and/or despreading) parameters associated with OFDM resource blocks. In some aspects, such spreading (and/or despreading) parameters may be pre-associated with each resource block assignment and communicated via the scheduler **835** to the despreading configuration module **836**. In some aspects, the despreading configuration module **836** listens to a scheduling channel broadcast by an uplink scheduler **835** to determine the subcarrier parameters. In other aspects, the despreading configuration module **836** might determine the subcarrier parameters from the UE transmissions.

The despreader **826** can be configured to perform hard decisions, soft decisions, or mixed-decision processing to produce the estimated data symbols. A baseband demodulator **827** may optionally be provided to perform further baseband processing of the estimated data symbols.

As depicted in FIG. **9**, a transceiver configured in accordance with aspects disclosed herein can include a controller, such as at least one computer or data processor **910**, at least one non-transitory computer-readable memory medium embodied as a memory **920** that stores a program of computer instructions **921**, and at least one suitable radio frequency (RF) transmitter/receiver **901** for bidirectional wireless communications with at least one other transceiver via one or more antennas **905**. The exemplary aspects of the disclosure (including those depicted in the flow diagrams and block diagrams) may be implemented, at least in part, by computer software executable by the data processor **910**. The transceiver shown in FIG. **9** can be a UE, a base transceiver station, a relay, or some other transceiver.

Aspects disclosed herein can include Cooperative-MIMO precoding, and can comprise configuring the spreading codes to provide for spreading across a combination of subcarriers and antennas (such as across multiple UEs). In such aspects, precoding can be configured to achieve a combination of cooperative spatial multiplexing across a plurality of UEs and a low PAPR for each UE's transmissions. In other aspects, precoding may comprise pre-equalizing the transmitted signal. In such aspects, for example, pre-equalization weights applied to transmitted OFDM subcarriers, such as may be implemented by incorporation into the spreading codes, can be derived from channel information. Various techniques, including multi-objective optimi-

zation and other multi-objective algorithms can be employed to generate spreading codes that optimize (or at least achieve a predetermined performance threshold relative to) certain objectives, such as low PAPR, low cross correlations, and/or other objectives.

A transceiver configured in accordance with aspects of the disclosure is depicted in the block diagrams of FIGS. **10**A and **10**B. The transceiver can comprise a client-side device or system, a server-side device or system, a relay device or system, and/or other WWAN transceivers. In some aspects, the blocks can comprise hardware components, such as circuits. The blocks can comprise processors, such as general-purpose processors programmed to perform functions in accordance with methods disclosed herein. The blocks are also indicative of functions that can be performed by a transceiver (which includes a network of transceivers) in accordance with aspect disclosed herein. In some aspects, the blocks can comprise separate devices communicatively coupled together via at least one network. In some aspects, at least some of the separate devices can be coupled together via a WLAN, which can include a radio and/or optical network.

In FIG. **10**A, the transceiver comprises a WWAN precoder **1010**, which is configured to calculate precoder weights for use in a distributed antenna system **1020**. The precoder **1010** receives information from a WWAN scheduler, such as a WWAN schedule processor **1001** and a WWAN CSI processor **1002**. A data source **1003** provides original data symbols to the WWAN precoder **1010**. The precoder **1010** is communicatively coupled to a fronthaul router **1012**, which is connected to the distributed antenna system **1020**.

In FIG. **10**B, the transceiver comprises a WWAN decoder **1030**, which is configured to calculate decoder weights for processing received signals, such as signals received from the distributed antenna system **1020**. The decoder **1010** receives information from the WWAN schedule processor **1001** and the WWAN CSI processor **1002**. A data sink **1033** processes decoded data symbols from the WWAN decoder **1030**. The decoder **1010** is communicatively coupled to the fronthaul router **1012**, which is connected to the distributed antenna system **1020**. In some aspects, the WWAN precoder **1010** and the WWAN decoder **1030** can be a single component or system.

In some aspects, blocks disclosed herein comprise processing elements that provide necessary computing facilities for the device or system. By way of example only, processing elements can include special purpose hardware, such as FFT, coding and/or decoding processors, or programmable CPUs. In aspects wherein one or more of the blocks are communicatively coupled together via a network, such as may be implemented in a distributed system, the blocks can comprise interfaces which contain appropriate traffic format conversion circuitry between the blocks and the interconnect network input and output. In some aspects, the system further includes internal resources with shared usage among various system blocks. By way of example only, these internal resources may comprise memory and a memory access controller.

In some aspects, the router **1012** includes Input-Output (I/O) device interface units that provide connection between the precoder **1010** and external devices of the distributed antenna system **1020** through one or more fronthaul interfaces. By way of example only, these devices may include Ethernet, wireless standard compliant networking, fiber networking, and/or an expansion interface for creating larger systems using multiple systems of the type shown in figure.

In one aspect, the transceiver is a server-side device or system, and the WWAN schedule processor **1001** is a scheduler, which assigns resource blocks (e.g., blocks of OFDM subcarriers) for uplink and downlink communications with one or more client-side devices (e.g., UEs). The WWAN precoder **1010** can use the scheduling information to determine a set of OFDM subcarriers for which precoding weights will be generated. The precoder **1010** can also use the scheduling information to help determine which antennas in the distributed antenna system **1020** to allocate for possible use in serving the client devices. For example, the scheduling information might contain geographical information about each corresponding client device. This can assist in allocating distributed computing resources operated by the WWAN precoder **1010**, for example, when multiple processing cores are employed. The WWAN precoder **1010** couples precoded-data signals or precoding weights and the original data signals to selected antennas of the distributed antenna system **1020** via the fronthaul router **1012**.

In another aspect, the transceiver is a client-side device or system, and the WWAN schedule processor **1001** receives WWAN scheduling information, such as is typically broadcast in the WWAN. However, the schedule processor can receive the WWAN scheduling information by other means. In one aspect, cooperating client devices may convey their corresponding scheduling information to the WWAN schedule processor **1001**, such as via the fronthaul network. The WWAN precoder **1010** can use the scheduling information to determine a set of OFDM subcarriers for which precoding weights will be generated. In some aspects, the WWAN precoder **1010** comprises a distributed computing system, such as may comprise multiple processing cores residing on different client-side devices. In some aspects, at least some of the processing cores of the WWAN Precoder **1010** might reside in a non-client device, such as a relay or a server-side device. The WWAN Precoder **1010** might be configured to use the scheduling information to allocate distributed computing resources (e.g., processing cores, memory, fronthaul resources, etc.), such as for precoding and/or other processing operations. The WWAN precoder **1010** can couple precoded-data signals or precoding weights and the original data signals to selected antennas of the distributed antenna system **1020** via the fronthaul router **1012**.

In one aspect, the transceiver is a server-side device or system, and the WWAN CSI processor **1002** provides downlink CSI to the WWAN precoder **1010**. For example, in a reciprocal channel, the CSI processor **1002** can infer downlink CSI from uplink CSI measurements. In some aspects, the client-side devices can measure CSI in the downlink and feedback their measurements to the server-side. The WWAN precoder **1010** then provides those CSI measurements to the WWAN precoder **1010**. The WWAN precoder **1010** can use the CSI to select antennas in the distributed antenna system **1020** to serve each client device and then use the CSI to calculate the precoding weights. By way of example, the WWAN precoder **1010** might select a preliminary, or candidate, plurality of antennas to be used for precoding, and then refine the selection of antennas based on various criteria. One objective of the WWAN precoder **1010** might include determining a set of the antennas that enables low-PAPR pre-coded transmissions per antenna. The WWAN precoder **1010** is operable to configure the precoding in order to provide low-PAPR transmissions. The WWAN precoder **1010** may be configured to achieve additional criteria, including enabling use of a fast transform, providing for code orthogonality (e.g., code spaces with low cross correlations), limiting WLAN overhead, etc.

In accordance with some aspects of the disclosure, it should be appreciated that blocks depicted in the figures can comprise interconnects that are not shown. By way of example, the WWAN CSI processor **1002** can be communicatively coupled to at least the WWAN schedule processor **1001** (such as in FIGS. **10**A and **10**B). In some aspects, the WWAN schedule processor **1001** employs CSI and/or other channel information for scheduling, such as to provide for channel-dependent scheduling. Channel-dependent scheduling can comprise selecting OFDM resource blocks with estimated and/or measured channel conditions that are advantageous for specific client devices. In some aspects, channel-dependent scheduling can comprise scheduling resource blocks to client devices in a manner that is advantageous to the operation of the server-side system. For example, scheduling may provide for assigning the same or overlapping resources (e.g., resource blocks and/or other network resources, such as antennas, processers, fronthaul capacity, backhaul capacity, etc.) to a set of client devices, which may be clustered together or geographically separated, such as to enhance network efficiency and/or performance.

While CI coding eliminates the effect of data randomization on the PAPR of OFDM transmissions from a single user, channel-based precoding (such as MIMO precoding, pre-equalization, etc.) can introduce randomization into the transmittal signals' crest factors due to the natural randomness of the multipath channel, which translates into randomness in the precoding. Thus, some aspects of the disclosure are configured to exploit additional degrees of freedom available in a MIMO channel when the number of available transmit antennas exceeds the minimum required rank of the channel matrix to reduce the crest factors. For example, in one aspect, a set of active transmit antennas in the distributed antenna system can be selected from a larger set of candidate antennas in the distributed antenna system. In another aspect, the set of active transmitting antennas can comprise a larger number than the number of antennas receiving the precoded transmissions, the precoder **1010** exploiting the extra antennas to provide for reducing PAPR, reducing spatial cross correlation, improving diversity, and/or the like. This enables antenna selection to advantageously provide a set of antennas per OFDM tone that achieves low-PAPR transmissions per antenna and/or per device. A low-PAPR criterion might include an aggregate of PAPR across antennas and/or devices, PAPR corresponding to a subset of antennas and/or devices, an average PAPR, a mean PAPR, a peak PAPR, some other function of PAPR, or some function of PAPR weighted relative to some other criterion. In some aspects, the selection of antennas per tone can be performed for each set of original data symbols.

In one aspect, the transceiver is a client-side device or system, and the WWAN CSI processor **1002** provides uplink CSI to the WWAN precoder **1010**. For example, in a reciprocal channel, the CSI processor **1002** can infer uplink CSI from downlink CSI measurements. In some aspects, the server-side devices might measure CSI in the uplink and feedback their measurements to the clients. The WWAN precoder **1010** provides the uplink CSI to the WWAN precoder **1010**. The WWAN precoder **1010** can use the CSI to select antennas in the distributed antenna system **1020**, which can include other client devices configured to operate in a Cooperative MIMO network, and then use the CSI to calculate the precoding weights. By way of example, the WWAN precoder **1010** might select a preliminary, or candidate, plurality of antennas to be used for precoding, and then refine the selection of antennas based on various criteria. One objective of the WWAN precoder **1010** might include determining a set of the clients that enables low-PAPR pre-coded transmissions per client.

The data source **1003** provides a stream of original data symbols (which can comprise user data and/or reference signals) to the WWAN precoder **1010**. In one aspect, the WWAN precoder **1010** calculates precoding weights separately for the user data and the reference signals. In other aspects, the WWAN precoder **1010** provides precoding weights for a data set comprising both user data and reference signals. In one aspect, the WWAN precoder **1010** is configured to select a block of the original data symbols from the data source **1003** and generate the precoding weights specific to the selected block of data. In other aspects, the WWAN precoder **1010** can calculate the precoding weights without a data input and then precode blocks of data from the data source **1003**. In some aspects, the data source **1003** might reside in a client device and receive data from at least one other client device in a cluster of devices communicatively coupled together via the fronthaul network. Data from at least one other device can be input to the WWAN precoder **1010**, which performs at least one of determining the precoding weights and precoding the data.

In a server-side device or system, the fronthaul router **1012** can comprise a local network manager, such as a Coordinated Multipoint router, communicatively coupled to the distributed antenna system **1020** (e.g., base transceiver stations, relays, remote radio heads, etc.) via any combination of fiber optic and wireless links. In a client-side device, the fronthaul router **1012** can comprise a local network manager, such as a cluster master, communicatively coupled to the distributed antenna system **1020** (e.g., the other clients in the cluster, relays, etc.) via wireless links.

In some aspects, the system shown in the figures can comprise a distributed system wherein the blocks are communicatively coupled via a fronthaul interconnect and may also include an interconnect network scheduler (not shown) which can configure and service communication traffic between I/O devices, processing elements, and shared resources. The interconnect network scheduler can control and configure accesses through the fronthaul interconnect, optimize the overall system for metrics, such as performance and access latency using trade-off parameters (such as power consumption, overall system efficiency, and a fronthaul schedule program). In some aspects, the interconnect network scheduler can be implemented as a distributed mechanism, which may be inherently part of internal elements of the blocks, and may include routing units, integrated hardware with processing elements, shared resources, I/O devices, and/or software program(s) executed by processing elements.

In accordance with aspects disclosed with reference to FIG. **3**, different network topologies (such as can be employed for connecting blocks, the distributed antenna system, and/or other resources within the blocks in FIGS. **10**A and **10**B) can be representative of data traffic created or used during precoding and/or decoding and can further comprise subnetwork topologies corresponding to partitioned processes (e.g., via data partitioning and/or computation partitioning). FIG. **3** depicts a reconfigurable interconnect network topology and scheduler wherein the scheduler provides control, configuration, and optionally status collection capabilities to and from the network nodes. There can be one or several subnetworks, each consisting of point-to-point interconnects and/or broadcasts. Each communication link can be established via routing elements, which can direct traffic streams to and/or from various

processing units, memories, other shared resources, and/or distributed antennas. The quantity, topology and parameters of the links and routing elements can determined at design time and/or dynamically configured.

Network topologies can be classified based on application operation mode and global characteristics, such as bandwidth, latency, and burst behavior. By way of example, different network topologies can be employed to process data corresponding to different OFDM subcarriers, different client devices being served, and/or different antennas in the distributed antenna system. In some aspects, computational partitioning can be performed. Different network topologies can correspond to different component problems. By way of example, a first network topology can be configured for processing CSI. A set of network topologies can be configured for determining precoding weights for each of a plurality of OFDM subcarriers. At least another network topology can be configured for configuring the precoding weights to provide a low-PAPR precoded transmission for one or more antennas and/or devices.

A fronthaul interconnect network schedule program can determine configuration of various nodes that meet concurrent communication traffic requirements of one or several application modes. Alternatively, each application operation mode may have its own schedule program. Configuration and operation of interconnect nodes can be statically determined or dynamically adapted based on the schedule program. The schedule program can organize input and output data for each node into distinct categories based on characteristics of interest, such as bandwidth, latency, ordering for more efficient resource utilization, quality of service, etc.

Mechanisms to employ multiple traffic schedules, including loading and storage of the new schedule programs can be provided. A router in the fronthaul interconnect may provide internal storage, selection, and forwarding of multiple traffic streams from multiple inbound links to multiple outbound links. A router may accommodate multiple traffic types based on a predetermined fabric schedule program.

In some aspects, multiple blocks or components may share a fronthaul interface. As determined by a fronthaul scheduler, a particular link may be used to carry traffic for multiple communicating units at a variety of transfer granularity sizes, service schedules, and/or durations. Multiple links may be selected to operate in tandem to provide required services for incoming or outgoing traffic.

For some topologies, it may be desirable to subdivide a stream into several streams across different links. This enhancement may facilitate potentially more efficient system operation, and each subdivision might be accommodated by a different schedule program. Alternatively, it may be beneficial to aggregate several data streams (possibly corresponding to different topologies) into one stream over a shared link.

FIG. **11** is a flow diagram that depicts a precoding method in a distributed antenna system in accordance with some aspects of the disclosure. CSI for a MIMO-OFDM channel is collected **1101** and is used for calculating multiple precoding matrices **1102** for each tone, each precoding matrix corresponding to a different antenna set. A set of precoding matrices, one for each tone, is selected **1103** according to a predetermined criterion based on PAPR. The selected set of precoding matrices is used to precode a block of the original data symbols **1104**. In some aspects, this process may be performed for each of a plurality of original data blocks. Step **1105** provides for returning to step **1101** or step **1102**. For example, in one aspect, steps **1103-1104** are repeated for a next block of original data symbols. In some aspects, steps **1101-1104** are repeated for the next block of original data symbols.

As disclosed above, the CSI may comprise measured channel conditions and/or statistical channel conditions. CSI may be inferred from channel measurements. For example, uplink CSI may be inferred from measured downlink CSI (and vise versa). Similarly, CSI corresponding to a particular tone may be interpolated from CSI corresponding to another tone. CSI may be directly measured from training signals (e.g., pilots) received by antennas in the distributed antenna system. In some aspects, CSI may be provided via data directed channel estimation. In some aspects, CSI is measured by devices communicatively coupled to the distributed antenna system via the WWAN and then fed back to the precoder(s) configured to perform the methods disclosed herein. By way of example, in an OFDM system, CSI can comprise flat-fading channel measurements and/or estimates (including statistics) corresponding to at least a subset of the antennas and for each tone.

Based on the CSI, a set of the antennas can be selected for each antenna on a device being served by the distributed antenna system via the WWAN. In some aspects, the device's antenna may be served by a first set of the antennas corresponding to a first tone and a second (different) set of antennas corresponding to a second tone. Some aspects disclosed herein provide for the distributed antenna system comprising a larger number of antennas than the aggregate number of antennas being served. This allows a subset of the antennas of the distributed antenna system to at least equal the aggregate number of antennas being served.

In one aspect, the distributed antenna system comprises a cluster of client devices, and the device(s) being served can comprise any of various antenna systems, including a server-side distributed antenna system, a server-side antenna array, one or more relay antennas, and/or one or more client-device antennas (e.g., a cluster of client devices, a client device antenna array, or some combination thereof). In some aspects, a cluster of devices may cooperate, such as in mesh networks, ad-hoc networks, multi-hop networks, cellular networks, and in other types of networks. In another aspect, the distributed antenna system can comprise a plurality of server-side antennas, including antennas residing on multiple base transceiver stations, and possibly antennas residing on other server-side devices and/or systems, including relays, remote radio heads, and the like. The device(s) being served can include any of the aforementioned client-side, server-side, and/or any intermediary devices.

In step **1102**, multiple combinations of serving antennas can be provided for each device (and/or antenna) being served, and there can be multiple combinations of serving antennas per tone per device (and/or antenna) being served. The serving distributed antenna system can comprise a larger number of candidate antennas than the aggregate number of antennas being served, which allows each selected subset of the antennas of the distributed antenna system to at least equal the aggregate number of antennas being served. In some aspects, the number of active antennas in the distributed antenna system serving a cluster of served antennas is larger than the number of antennas in the cluster being served. This results in extra degrees of freedom which are ordinarily used for array processing purposes, such as to provide added antenna-array gain, diversity, redundancy, and the like. Aspects of the disclosure can exploit these extra degrees of freedom to reduce PAPR of the transmissions from each antenna and/or device. For example, the extra degrees of freedom can provide for adaptations to the

precoding matrix which can achieve objectives, such as low PAPR, that are not directly related to array processing performance.

In some aspects, additional degrees of freedom can be achieved by employing extra spectrum, which may include extra tones, for transmission. By way of example, the IDFT can be configured to employ extra tones in order to reduce the PAPR of the transmitted OFDM signal. In one aspect, the extra tones might be transmitted in a manner that avoids interfering with the WWAN system. For example, the extra tones may comprise unscheduled resources in the WWAN. In another case, the extra tones may comprise WWAN control channels which are not transmitted during the uplink timeslot. In some aspects, the extra tones can correspond to a different communication system other than the WWAN. In these aspects, the extra tones can be weighted such as to reduce PAPR of the transmitted signals. In another aspect, the extra tones might comprise pilot tones, and data corresponding to weights applied to the pilots tones such as to reduce the PAPR may be communicated to the receive side such that the receive side can compensate for the weights in the received pilots. In such aspects, some data bandwidth is sacrificed to improve PAPR performance.

In some aspects disclosed herein, additional spectral bandwidth can be used to help reduce PAPR. However, the additional spectral bandwidth does not need to comprise tones. In some aspects, signals employed for reducing the PAPR can be pseudo-orthogonal or non-orthogonal relative to the spread-OFDM signal.

In one aspect of the disclosure, step **1102** comprises generating multiple precoding matrices for at least one tone such that each precoding matrix achieves a predetermined minimum cross correlation between subspace channels. By way of example, the degree of cross correlation can be determined based on spatial subchannel eignevalues.

In step **1103**, a precoding matrix set can comprise one precoding matrix per tone. For each set, the PAPR for each antenna and/or device can be determined for the precoded transmission across the full set of tones. At least one PAPR criterion based on these PAPRs can be determined, and the precoding matrix set qualifying as "low PAPR" based on the at least one PAPR criterion can be selected.

It should be appreciated that in some aspects, step **1102** depends on the CSI but not on the data block being precoded, so it may be updated based on the channel conditions changing (such as may be determined by coherence time or some similar channel characterization). Step **1103** might depend on the data block being precoded, and may be repeated for each block of original data symbols to be precoded. In some aspects, step **1102** may be repeated for each block. For example, given a new block of original data symbols, a new set of precoding matrices may be selected. This can include adapting previous precoding matrices.

In some aspects, steps **1102** and **1103** can be combined in an iterative process wherein the precoding matrices are adapted and the PAPR criterion for the adapted set is evaluated, and the process is repeated until a predetermined criterion is satisfied, such as a maximum number of iterations, an elapsed amount of time, a predetermined PAPR threshold, or the like. In some aspects, step **1103** comprises selecting a precoding matrix set from multiple sets which correspond to a best PAPR. In some aspects, step **1102** can comprise adapting the matrices according to one or more adaptation schemes. By way of example, an adaptation scheme may comprise randomly adapting at least one precoding weight, adapting precoding weights in response to how a previous adaptation changed a metric (such as PAPR, cross correlation, etc.), and/or adapting at least one precoding weight according to a measured characteristic of the channel and/or original data symbols. In some aspects, certain configurations of CSI values and/or data can be used to determine how to adapt the precoding matrices. Such adaptations may be determined, based on a given configuration(s), to have a high probability of yielding a lower PAPR. Such determinations may be based on historical data, perhaps being associated with correlated behaviors and/or identified trends, and/or they may be determined analytically.

In some aspects, favorable cross correlation can be sacrificed for favorable PAPR, or vise versa. In some aspects, it should be appreciated that the low PAPR criteria may be weighted with respect to particular antennas and/or devices that are transmitting the precoded signals. For example, in one aspect, low PAPR can be more important for battery-powered transceivers. Thus, a precoding matrix set may be selected that allows for higher PAPR among devices that receive line power to enable lower PAPR among devices that are battery powered. In some aspects, the transmit power of each device may determine how important it is to be provided with a low-PAPR coded signal. For example, devices that are currently transmitting with low transmit power might tolerate a high-PAPR transmission better than devices transmitting at high power. In some aspects, the inherent PAPR of the modulation constellation being used by each device may determine the low-PAPR criterion. In some aspects, power consumption per device may be employed to determine the PAPR criterion. For example, it may be important to provide for uniform power consumption across the transmitting devices. In some aspects, the type of device for each transmitting device may be used to determine its weight in the low-PAPR criterion. In some aspects, an operating status of a device may be used to determine its weight.

For example, it may be more important for devices with low battery power to be provided with low-PAPR coded signals. It should be appreciated that other operating parameters and device characteristics may be employed to determine the low-PAPR criterion.

FIG. **12** is a flow diagram that depicts a precoding method in a distributed antenna system in accordance with some aspects of the disclosure. CSI for a MIMO-OFDM channel is collected **1201** and can be used for selecting a set of antennas for each tone **1202**. Precoding weights are calculated for each antenna-tone set (i.e., a set of antennas for each tone) **1203**. PAPR is calculated **1204** for each active antenna and/or device in the distributed antenna system. Spatial cross correlations of the weighted transmissions may optionally be calculated **1205**. A decision is based on the PAPR (and optionally the cross correlations) **1206**, and the decision determines where control is transferred to in the flow diagram.

In one aspect, if the decision **1206** indicates that a PAPR criteria is not met with the current antenna-tone set, the method returns to step **1202** (indicated by decision result **1207.1**) in order to select a new antenna-tone set. In some aspects, step **1207.1** can comprise sending information (such as decision information, precoding weights, cross correlation information, and/or instructions for selecting the new antenna-tone set) to step **1202**.

In another aspect, the decision **1206** can cause control to return to step **1201** via step **1207.2**. For instance, decision **1206** can comprise a determination of whether the CSI needs to be updated. In some aspects, the CSI is collected **1201** based on a predetermined time interval, when measured

reference signals indicate a sufficient change in the channel state, for each block of original data symbols, or via some other criteria or mechanism.

In another aspect, the decision **1206** can cause control to transfer to block **1207.3** wherein a set of precoding weights is selected to precode the original data symbols. For example, when a predetermined PAPR criterion is met, the original data symbols are precoded **1207.3** using the weights that satisfy the criterion. The weights may be selected from weights of a corresponding antenna-tone set that best satisfies the PAPR criterion after a predetermined number of iterations, or the weights may satisfy the PAPR criterion, at which point the iterations cease and control is transferred to block **1207.3**. In some aspects, additional criteria may be employed in the decision **1206** as described above, and when those criteria are satisfied, the original data symbols are precoded **1207.3**.

In one aspect, step **1202** comprises selecting a destination group of antennas. For example, a server-side system can select which client devices it will serve for a given set of distributed antennas. Optionally, this can be done for each OFDM tone or set of tones. In some aspects, the selected client devices comprise a cluster (which may be in close geographical proximity with each other), such as may be advantageous when the client devices are configured to perform client-side Cooperative MIMO. In other aspects, the selected clients may be geographically distributed, such as to ensure that reused frequency channels are uncorrelated. In some aspects, a similar decision on destination antennas is made by a cluster of client devices, such as a local group of UE's communicatively coupled together and configured to perform client-side Cooperative MIMO. The system (or cluster) can then select which antennas in its distributed antenna system to serve each destination antenna (or device), and this selection can be made for each tone or set of tones. For at least one tone, the selection can comprise a number of candidate distributed antennas that is greater than the channel-matrix rank necessary to provide a sufficient number of spatial subchannels to serve the destination antennas. For example, the number of transmitting antennas can be greater than the number of receiving antennas.

As described in the patents and applications incorporated by reference, the selection of spectral components (e.g., OFDM tones) and their association with particular wireless terminals can be performed to optimize WWAN system performance relative to the current WWAN channel. For example, the spectral components can be selected to minimize the effects of deep fades and/or interference. Spectral-component selection (e.g., scheduling) may be selected and/or adapted to optimize one or more WWAN link-performance metrics, including, but not limited to, SNR, BER, PER, and throughput. Spectral-component selection may be performed to achieve other objectives, such as to distribute processing loads across devices.

In accordance with certain aspects of the disclosure, scheduling can comprise one of two types of subcarrier mapping. Localized mapping comprises a contiguous block of subcarriers (e.g., a continuous frequency band), whereas distributed mapping comprises a non-contiguous (e.g., discontinuous, or frequency-interleaved) set of subcarriers. With localized subcarrier mapping, it is possible to exploit frequency selective gain via channel-dependent scheduling (e.g., assigning uplink frequencies to each UE based on favorable channel conditions).

A set of precoding matrices, one for each tone, can be calculated **1203** according to a predetermined criterion based on PAPR. In accordance with some aspects of the disclosure, a precoder configures the precoding matrix to provide a spread-OFDM transmission(s) with low PAPR. By way of example, low PAPR can be achieved by selecting appropriate spreading codes (such as may be based on number of OFDM tones and tone spacing) and properly configuring the order in which spread data symbols are mapped to particular tones. The spreading codes can be generating using a DFT that is configured with appropriate input parameters. Thus, the precoder can provide for frequency-domain synthesis to generate a spread-OFDM signal that comprises a set of contiguous and/or non-contiguous OFDM tones. In aspects wherein the precoder is configured to perform MIMO subspace precoding in addition to spread-OFDM coding, the precoder can be configured to produce low-PAPR transmissions, such as by employing the methods corresponding to FIGS. **11-13**. In some aspects, the precoder can adapt the transmit power of certain spatial subchannels in order to effect changes in the aggregate PAPR. By way of example, the precoder can scale the weights of a particular eigenvector to adjust power in the corresponding spatial direction.

The selected set of precoding matrices is used to precode a block of the original data symbols, and then the PAPR of each precoded transmission (such as transmitted by each transmitting antenna or device) can be calculated **1204**, such as by aggregating precoded signals across all the tones allocated to the antenna or device. In some aspects, the PAPR (and thus the precoding) may be specific to each block of original data symbols, so this process may be performed for each original data block.

As precoding is adapted to reduce the PAPR of the spread-OFDM signal(s), there can be a tradeoff between desirable PAPR and spatial correlation attributes. Estimating the spatial correlation **1205** can be performed, which in one sense can be regarded as a measure of code cross-correlation, which can be used to characterize orthogonality of the codes. Although many different techniques can be employed for determining the spatial correlation **1205**, it should be appreciated that spatial correlation depends on the eigenvalue distributions of the correlation matrices. Each eigenvector represents a spatial direction of the channel, and its corresponding eigenvalue describes the average channel/signal gain in this direction. For example, for the transmit-side spatial correlation matrix, it describes the average gain in a spatial transmit direction. In some aspects, both transmit-side and receive-side spatial correlation matrices are determined. In some aspects, step **1205** can comprise determining some value derived from or otherwise based on spatial correlation. For example, channel capacity, which depends on spatial correlation, might be determined instead.

FIG. **13** is a flow diagram that depicts a precoding method in a distributed antenna system in accordance with some aspects of the disclosure. CSI is collected **1301**, and then for each OFDM tone, a set of antennas in an origin distributed antenna system is selected to serve a set of destination antennas **1302**. Precoding weights are calculated for each origin set **1303**. PAPR is calculated for each antenna (and/or device) in the origin set **1304**. After one or more iterations, one of the origin sets is selected **1305** to be used for precoding.

In one aspect of the disclosure, a set of UEs comprises the distributed antenna system, and the method depicted in FIG. **13** provides for precoding uplink transmissions from the UEs to a set of eNodeBs. For each of a plurality N_{tones} of OFDM tones, step **1302** provides for selecting a number $N_{sets}(n_{tones})$ of different UE sets to transmit pre-coded signals, where a particular number $N_{sets}(n_{tones})$ denotes a

number of UE sets corresponding to a n_{tones}^{th} OFDM tone. For each of the N_{tones} tones, step **1303** calculates precoding weights for all the corresponding UE sets. If there are N_{sets} UE sets for each of the N_{tones} OFDM tones, then there might be up to a total of $N_{sets} \cdot N_{tones}$ precoding matrices. A combination of precoding matrices is provided by selecting one precoding matrix for each of the N_{tones} OFDM tones. Step **1304** provides for calculating the PAPR for each of multiple combinations of the precoding matrices. By way of example, a PAPR can be calculated from an IDFT of a set of spread original data symbols comprising the original data symbols spread by a corresponding precoding matrix.

Step **1305** can comprise any of various techniques for selecting an antenna-tone set. For example, if the corresponding combination of precoding matrices satisfies a threshold criterion, such as can be based on PAPR, then the antenna-tone set is selected and the combination of precoding matrices is used to encode the original data symbols. In other aspects, a "best" metric (such as may be based on PAPR) may be determined, such as from an exhaustive search or a combinatorial search. A combinatorial search is one that might exploit one or more pruning strategies to avoid testing all possible candidate combinations. Combinatorial searches can include branch and bound, greedy, local search methods, and a variety of heuristics that use partial knowledge about the structure of the solution space, which can achieve a "good" solution, if not the "best" solution.

The various blocks shown in the figures may be viewed as method steps, and/or as operations that result from operation of computer program code, and/or as a plurality of coupled logic circuit elements constructed to carry out the associated function(s).

In general, the various exemplary aspects may be implemented in hardware or special purpose circuits, software, logic or any combination thereof. For example, some aspects may be implemented in hardware, while other aspects may be implemented in firmware or software which may be executed by a controller, microprocessor or other computing device, although the invention is not limited thereto. While various aspects of the exemplary embodiments of this disclosure may be illustrated and described as block diagrams, flow charts, or using some other pictorial representation, it is well understood that these blocks, apparatus, systems, techniques or methods described herein may be implemented in, as non-limiting examples, hardware, software, firmware, special purpose circuits or logic, general purpose hardware or controller or other computing devices, or some combination thereof.

It should thus be appreciated that at least some aspects of the exemplary aspects of the disclosure may be practiced in various components such as integrated circuit chips and modules, and that the exemplary aspects of this disclosure may be realized in an apparatus that is embodied as an integrated circuit. The integrated circuit, or circuits, may comprise circuitry (as well as possibly firmware) for embodying at least one or more of a data processor or data processors, a digital signal processor or processors, baseband circuitry and radio frequency circuitry that are configurable so as to operate in accordance with the exemplary aspects of this disclosure.

Various modifications and adaptations to the foregoing exemplary aspects of this disclosure may become apparent to those skilled in the relevant arts in view of the foregoing description, when read in conjunction with the accompanying drawings. However, any and all modifications will still fall within the scope of the non-limiting and exemplary aspects of this disclosure.

The invention claimed is:

1. An apparatus, comprising:

a transform precoder operable to spread a plurality of data symbols with a plurality of orthogonal spreading codes comprising complex-valued coefficients of a discrete Fourier transform (DFT) to produce a plurality of spread symbols;

a multiple access resource mapper responsive to an assignment of spectrum resources to the apparatus for selecting a plurality of orthogonal frequency division multiplexing (OFDM) subcarriers corresponding to at least one OFDM symbol interval; and

a signal generator operable to generate an OFDM signal comprising a superposition of the plurality of OFDM subcarriers modulated by the spread symbols, wherein the transform precoder generates the plurality of orthogonal spreading codes to provide the superposition with a reduced peak-to-average-power ratio; and wherein one of the plurality of spread symbols is expressed by:

$$z(l \cdot M_{sc}^{PUSCH} + k) = \frac{1}{\sqrt{M_{sc}^{PUSCH}}} \sum_{i=0}^{M_{sc}^{PUSCH}-1} d(l \cdot M_{sc}^{PUSCH} + i) e^{-j\frac{2\pi ik}{M_{sc}^{PUSCH}}}$$

wherein M_{sc}^{PUSCH} is a DFT length corresponding to the plurality of orthogonal spreading codes, l is an index spanning 0 to a number of symbol intervals minus one, k is an index spanning zero to the DFT length M_{sc}^{PUSCH} minus one, i is an index spanning zero to the DFT length M_{sc}^{PUSCH} minus one, d(i) is an ith one of the plurality of data symbols, e is natural log, $i=\sqrt{-1}$, and π is mathematical constant Pi.

2. The apparatus recited in claim **1**, wherein the transform precoder is configured to segment the plurality of data symbols into a plurality of blocks, each of the plurality of blocks being processed by a DFT.

3. The apparatus recited in claim **1**, wherein at least one of the transform precoder and the multiple access resource mapper is configured to weight each of the plurality of OFDM subcarriers with an amplitude scaling factor to adjust gain of the superposition.

4. The apparatus recited in claim **1**, wherein the multiple access resource mapper is configured to select the plurality of OFDM subcarriers according to at least one of a frequency division multiple access scheme, a time division multiple access scheme, a space division multiple access scheme, and a frequency-hopping scheme.

5. The apparatus recited in claim **1**, wherein the signal generator is operable to perform an inverse fast Fourier transform.

6. The apparatus recited in claim **1**, wherein the superposition comprises a time-continuous signal $s_l(t)$ in symbol interval l as a function of time t, expressed by:

$$s_l(t) = \sum_{k=-[N_{RB}^{UL} N_{sc}^{RB}/2]}^{[N_{RB}^{UL} N_{sc}^{RB}/2]-1} a_k(-)_{,l} e^{j2\pi(k+1/2)\Delta f(t-N_{CP,l}T_s)}$$

where NB denotes a transmission bandwidth of the signal $s_l(t)$ and N_{sc}^{RB} denotes a number of OFDM subcarriers

per unit of transmission bandwidth such that $N_{RB}^{UL}N_{sc}^{RB}$ equals a total number of the OFDM subcarriers in the superposition, k is an index that indicates a range of a summation, $k^{(-)}=k+N_{RB}^{UL}N_{sc}^{RB}/2$, $a_{k,l}$ is a value modulated onto a kth subcarrier in symbol period l, e is natural log, $j=\sqrt{-1}$, π is mathematical constant Pi, Δf denotes subcarrier frequency spacing, $N_{CP,l}$ denotes cyclic prefix length in number of time units T_S for symbol interval l; wherein $a_{k,l}$ comprises a one of the plurality of code symbols corresponding to a kth subcarrier in symbol period l.

7. The apparatus recited in claim **1**, further comprising a modulator configured to form each of the plurality of data symbols from a plurality of data bits.

8. The apparatus recited in claim **7**, further comprising a pseudo-noise scrambler configured to encode the plurality of data bits with a pseudo-noise code.

9. A method for communication, performed by at least one processor, comprising:

spreading a plurality of data symbols with a plurality of orthogonal spreading codes comprising complex-valued coefficients of a discrete Fourier transform (DFT) to produce a plurality of spread symbols;

responsive to an assignment of spectrum resources for use by a transmitter in an orthogonal frequency division multiplexing (OFDM) network, selecting a plurality of OFDM subcarriers corresponding to at least one OFDM symbol interval; and

generating an OFDM signal comprising a superposition of the plurality of OFDM subcarriers, each modulated by one of the plurality of spread symbols, wherein the plurality of orthogonal spreading codes are selected to provide the superposition with a reduced peak-to-average-power ratio; wherein at least one of the plurality of spread symbols is expressed by:

$$z(l\cdot M_{sc}^{PUSCH}+k)=\frac{1}{\sqrt{M_{sc}^{PUSCH}}}\sum_{i=0}^{M_{sc}^{PUSCH}-1}d(l\cdot M_{sc}^{PUSCH}+i)e^{-j\frac{2\pi ik}{M_{sc}^{PUSCH}}}$$

wherein M_{sc}^{PUSCH} is a DFT length corresponding to the plurality of orthogonal spreading codes, l is an index spanning 0 to a number of symbol intervals minus one, k is an index spanning zero to the DFT length M_{sc}^{PUSCH} minus one, i is an index spanning zero to the DFT length M_{sc}^{PUSCH} minus one, d(i) is an ith one of the plurality of data symbols, e is natural log, $j=\sqrt{-1}$, and π is mathematical constant Pi.

10. The method recited in claim **9**, wherein the spreading is configured to segment the plurality of data symbols into a plurality of blocks, each of the plurality of blocks being processed by a DFT.

11. The method recited in claim **9**, wherein at least one of spreading and selecting provides for multiplying each of the plurality of OFDM subcarriers with an amplitude scaling factor to adjust gain of the superposition.

12. The method recited in claim **9**, wherein selecting the plurality of OFDM subcarriers is performed with respect to at least one of a frequency division multiple access scheme, a time division multiple access scheme, a space division multiple access scheme, and a frequency-hopping scheme.

13. The method recited in claim **9**, wherein generating the OFDM signal comprises performing an inverse fast Fourier transform on the plurality of spread symbols.

14. The method recited in claim **9**, wherein the superposition comprises a time-continuous signal $s_l(t)$ in symbol interval l as a function of time t, expressed by:

$$s_l(t)=\sum_{k=-[N_{RB}^{UL}N_{sc}^{RB}/2]}^{[N_{RB}^{UL}N_{sc}^{RB}/2]-1}a_k(-),_l e^{j2\pi(k+1/2)\Delta f(t-N_{CP,l}T_S)}$$

where N_{RB}^{UL} denotes a transmission bandwidth of the signal $s_l(t)$ and N_{sc}^{RB} denotes a number of OFDM subcarriers per unit of transmission bandwidth such that $N_{RB}^{UL}N_{sc}^{RB}$ equals a total number of the OFDM subcarriers in the superposition, k is an index that indicates a range of a summation, $k^{(-)}=k+N_{RB}^{UL}N_{sc}^{RB}/2$, $a_{k,l}$ is a value modulated onto a kth subcarrier in symbol period l, e is natural log, $j=\sqrt{-1}$, π is mathematical constant Pi, Δf denotes subcarrier frequency spacing, $N_{CP,l}$ denotes cyclic prefix length in number of time units T_S for symbol interval l; wherein $a_{k,l}$ comprises a one of the plurality of code symbols corresponding to a kth subcarrier in symbol period l.

15. The method recited in claim **9**, wherein each of the plurality of data symbols is generated from a plurality of data bits, the plurality of data bits having been encoded with a pseudo-noise code.

16. An at least one processor configured to perform the method recited in claim **9**.

17. A User Equipment configured to perform the method recited in claim **9**.

18. A non-transitory computer-readable medium having computer executable program code stored thereon, the computer executable program code comprising:

program code to spread a plurality of data symbols with a plurality of orthogonal spreading codes comprising complex-valued coefficients of a discrete Fourier transform (DFT) to produce a plurality of spread symbols;

program code responsive to an assignment of spectrum resources for use by a transmitter in an orthogonal frequency division multiplexing (OFDM) network, for selecting a plurality of OFDM subcarriers corresponding to at least one OFDM symbol interval; and

program code to generate an OFDM signal comprising a superposition of the plurality of OFDM subcarriers modulated by the plurality of spread symbols, wherein the plurality of orthogonal spreading codes are selected to provide the superposition with a reduced peak-to-average-power ratio; wherein one of the plurality of spread symbols is expressed by:

$$z(l\cdot M_{sc}^{PUSCH}+k)=\frac{1}{\sqrt{M_{sc}^{PUSCH}}}\sum_{i=0}^{M_{sc}^{PUSCH}-1}d(l\cdot M_{sc}^{PUSCH}+i)e^{-j\frac{2\pi ik}{M_{sc}^{PUSCH}}}$$

wherein M_{sc}^{PUSCH} is a DFT length corresponding to the plurality of orthogonal spreading codes, l is an index spanning 0 to a number of symbol intervals minus one, k is an index spanning zero to the DFT length M_{sc}^{PUSCH} minus one, i is an index spanning zero to the DFT length M_{sc}^{PUSCH} minus one, d(i) is an ith one of the plurality of data symbols, e is natural log, $i=\sqrt{-1}$, and π is mathematical constant Pi.

19. The non-transitory computer-readable medium recited in claim **18**, wherein the program code to spread is config-

ured to segment the plurality of data symbols into a plurality of blocks and process each of the plurality of blocks with a DFT.

20. The non-transitory computer-readable medium recited in claim **18**, wherein at least one of the program code to spread and the program code responsive to the assignment provides for multiplying each of the plurality of OFDM subcarriers with an amplitude scaling factor to adjust gain of the superposition.

21. The non-transitory computer-readable medium recited in claim **18**, wherein the program code responsive to the assignment is configured to perform according to at least one of a frequency division multiple access scheme, a time division multiple access scheme, a space division multiple access scheme, and a frequency-hopping scheme.

22. The non-transitory computer-readable medium recited in claim **18**, wherein the program code to generate the OFDM signal is configured to provide for performing an inverse fast Fourier transform on the plurality of spread symbols.

23. The non-transitory computer-readable medium recited in claim **18**, wherein the superposition is processed to provide a time-continuous signal $s_l(t)$ in symbol interval l as a function of time t, expressed by:

$$s_l(t) = \sum_{k=-[N_{RB}^{UL}N_{sc}^{RB}/2]}^{[N_{RB}^{UL}N_{sc}^{RB}/2]-1} a_{k^{(-)},l}\, e^{j2\pi(k+1/2)\Delta f(t-N_{CP,l}T_s)}$$

where N_{RB}^{UL} denotes a transmission bandwidth of the signal $s_l(t)$ and N_{sc}^{RB} denotes a number of OFDM subcarriers per unit of transmission bandwidth such that $N_{RB}^{UL}N_{sc}^{RB}$ equals a total number of the OFDM subcarriers in the superposition, k is an index that indicates a range of a summation, $k^{(-)}=k+N_{RB}^{UL}N_{sc}^{RB}/2$, $a_{k,l}$ is a value modulated onto a kth subcarrier in symbol period l, e is natural log, $j=\sqrt{-1}$, π is mathematical constant Pi, Δf denotes subcarrier frequency spacing, $N_{CP,l}$ denotes cyclic prefix length in number of time units T_S for symbol interval l; wherein $a_{k,l}$ comprises a one of the plurality of code symbols corresponding to a kth subcarrier in symbol period l.

24. The non-transitory computer-readable medium recited in claim **18**, further comprising program code to generate the plurality of data symbols from a plurality of data bits, and program code to generate the plurality of data bits by encoding a first plurality of data bits with a pseudo-noise code.

* * * * *