UNITED STATES PATENT AND TRADEMARK OFFICE

BEFORE THE PATENT TRIAL AND APPEAL BOARD

SAMSUNG ELECTRONICS CO., LTD. AND SAMSUNG ELECTRONICS AMERICA, INC.,
Petitioner,

v.

GENGHISCOMM HOLDINGS LLC,
Patent Owner

Case: IPR2025-00791
U.S. Patent No. 11,252,005

DECLARATION OF HARRY V. BIMS, Ph.D. IN SUPPORT OF PETITION FOR *INTER PARTES* REVIEW

TABLE OF CONTENTS

I. Introduction 1
II. Qualifications 2
III. Materials Considered 4
IV. Legal Standards 6
A. Level of Ordinary Skill 7
B. Prior Art 9
C. Anticipation 9
D. Obviousness 10
V. Claim Construction 12
VI. The ’005 Patent 13
A. General Overview and Background Concepts 13
B. Prosecution History and Effective Filing Date 20
C. The Challenged Claims 23
D. Person of Ordinary Skill in the Art (“POSITA”) 23
VII. Overview of the Prior Art 25
A. Galda (EX1004) 25
B. Doufexi (EX1003) 27
C. Lucent (EX1006) 29
D. Bury (EX1007) 31
E. Ma (EX1033) 33
F. Dowling (EX1042) 34
VIII. GROUNDS 1-2: Claims 1, 6, 9, and 10 are (Ground 1) anticipated by and (Ground 2) obvious over Galda 35
A. Challenged Claims 35
1. Independent Claim 1 35
2. Dependent Claims 55

Samsung Exhibit 1002, Page 2 of 149
Samsung Electronics Co., Ltd. et al. v. Genghiscomm Holdings LLC

IX. GROUND 3: Claims 13, 18, 21, 22, 25, 30, 33, and 34 are obvious over Galda in view of Dowling 58
A. Reasons for Combining Prior Art 58
B. Challenged Claims 61
1. Independent Claims 13 and 25 61
2. Dependent Claims 64
X. Grounds 4 and 5: Claim 7 is obvious over Galda in view of Doufexi, while Claims 19 and 31 are obvious over Galda in view of Dowling and Doufexi 65
A. Reasons for Combining Prior Art 65
B. Claim 7 (Ground 4) 68
C. Claims 19 and 31 (Ground 5) 69
XI. Grounds 6 and 7: Claim 7 is obvious over Galda in view of Lucent, while Claims 19 and 31 are obvious over Galda in view of Dowling and Lucent 70
A. Reasons for Combining Prior Art 70
B. Claim 7 (Ground 6) 73
C. Claims 19, 31 (Ground 7) 74
XII. Grounds 8 and 9: Claim 7 is obvious over Galda in view of Ma, while Claims 19 and 31 are obvious over Galda in view of Dowling and Ma 75
A. Reasons for Combining Prior Art 75
B. Claim 7 (Ground 8) 77
C. Claims 19, 31 (Ground 9) 78
XIII. Grounds 10 and 11: Claim 11 is obvious over Galda in view of Bury, while claims 23 and 35 are obvious over Galda in view of Dowling and Bury 78
A. Claim 11 (Ground 10) 78
B. Claims 23, 35 (Ground 11) 79
XIV. DECLARATION IN LIEU OF OATH 81

TABLE OF EXHIBITS

Exhibit	Description
1001	U.S. Patent No. 11,252,005
1002	Declaration of Harry Bims, Ph.D.
1003	Angela Doufexi, et al., *Design Considerations and Initial Physical Layer Performance Results for a Space Time Coded OFDM 4G Cellular Network*, In The 13th IEEE International Symposium on Personal, Indoor and Mobile Radio Communications (Vol. 1, pp. 192-196). IEEE (Sept. 18, 2002) ("Doufexi").
1004	Dirk Galda & Hermann Rohling, *A Low Complexity Transmitter Structure for OFDM-FDMA Uplink Systems*, Vehicular Technology Conference. IEEE 55th Vehicular Technology Conference, vol. 4, pp.1737-1741 (May 6, 2002) ("Galda").
1005	Stefan Kaiser, *Multi-Carrier CDMA Mobile Ratio Systems – Analysis and Optimization of Detection, Decoding, and Channel Estimation*, VDI-Verlag, Dusseldorf, Germany (Jan. 1998) (ISBN 3-18-353110-0) ("Kaiser")
1006	Lucent Technologies, *Proposed Baseline OFDM Systems for Study*, 3GPP TSG-RAN1 #28 bis, R1-02-01246 (Oct. 8-9, 2002) ("Lucent").
1007	Andres Bury & Jurgen Linder, *Comparison of Amplitude Distributions for Hadamard Spreading and Fourier Spreading in Multi-Carrier Code Division Multiplexing*, Globecomm '00-IEEE. Global Telecommunications Conference, Vol. 2, pp.857-860 (Nov. 27, 2000) ("Bury")
1008	Kwang-Cheng Chen, et al., *A Programmable Architecture for OFDM-CDMA*, IEEE Communications Magazine, pp.76-82 (Nov. 1999) ("Chen")
1009	José Francia, *Proposal for an OFDM-based 802.16.3 Air Interface Physical Layer*, IEEE 802.16.3c-00/44 (Oct. 30, 2000)
1010	John Langley, *PHY Layer System Proposal for Sub 11 GHz BWA Having SC-FDE and OFDM Modules*, IEEE802.16.3c-01/31r2 (Mar. 12, 2001).
1011	U.S. Patent Application Publication No. 2003/0081538 to Walton et al.

Exhibit	Description
1012	Declaration of Sylvia Hall-Ellis, Ph.D.
1013	Hermann Rohling, et al., *Broad-Band OFDM Radio Transmission for Multimedia Applications*, Proceedings of the IEEE, Vol. 87, No. 10, Oct. 1999 ("Rohling")
1014	Stephen B. Weinstein, *The History of Orthogonal Frequency-Division Multiplexing*, IEEE Communications Magazine, pp.26-35 (Nov. 2009).
1015	Richard van Nee & Ramjee Prasad, *OFDM for Wireless Multimedia Communications* (Artech House 2000).
1016	Karsten Bruninghaus & Herman Rohling, *Multi-carrier spread spectrum and its relationship to single-carrier transmission*, Vehicular Technology Conference. IEEE 48th Vehicular Technology Conference, vol. 3, pp.2329-2332 (May 18-21, 1998) ("Brüninghaus").
1017	File History of U.S. Patent Application No. 17/105,574 as obtained from Patent Center
1018	File History of U.S. Patent Application No. 15/283,881 as obtained from Patent Center (excerpts).
1019	File History of U.S. Patent Application No. 14/967,633 as obtained from Patent Center (excerpts).
1020	File History of U.S. Patent Application No. 14/168,466 as obtained from Patent Center.
1021	File History of U.S. Patent Application No. 11/187,107 as obtained from Patent Center (excerpts).
1022	File History of Provisional No. 60/589,187
1023	File History of U.S. Patent Application No. 10/145,854 as obtained from Patent Center (excerpts).
1024	U.S. Patent No. 8,670,390
1025	U.S. Patent No. 8,750,264
1026	U.S. Patent No. 9,048,897
1027	U.S. Patent No. 11,201,644
1028	File History of U.S. Patent Application No. 15/786,270 as obtained from Patent Center (excerpts)

Exhibit	Description
1029	File History of U.S. Patent Application No. 15/396,567 as obtained from Patent Center (excerpts)
1030	File History of U.S. Patent Application No. 14/727,769 as obtained from Patent Center (excerpts)
1031	File History of U.S. Patent Application No. 14/276,309 as obtained from Patent Center (excerpts)
1032	File History of U.S. Patent Application No. 12/545,572 as obtained from Patent Center (excerpts)
1033	U.S. Patent Application Publication No. 2015/0256308 to Ma et al. ("Ma")
1034	Declaration of Craig Bishop
1035	3GPP TS 36.306 V8.0.0 (2007-12) (Release 8)
1036	File History of U.S. Patent Application No. 15/489,644 as obtained from Patent Center (excerpts)
1037	File History of U.S. Patent Application No. 15/149,382 as obtained from Patent Center (excerpts)
1038	3GPP TS 36.211 V8.8.0 (2009-09) 3rd Generation Partnership Project; Technical Specification Group Radio Access Network; Evolved Universal Terrestrial Radio Access (E-UTRA); Physical Channels and Modulation (Release 8)
1039	Exhibit 1 to Plaintiff's P.R. 3-1(c) Infringement Contentions (U.S. Pat. No. 9,768,842)
1040	Marco Breiling, et al., *Peak-Power Reduction in OFDM without Explicit Side Information*, 5th Int'l OFDM-Workshop 2000 (Hamburg/Germany), Sept. 2000, pp.28-1 to 28-4.
1041	EP 0 734 132 A2 to Kabushiki Kaisha Toshiba ("Toshiba")
1042	U.S. Patent No. 6,597,745 to Dowling
1043	Gerhard P. Fettweis, et al., *A Time Domain View to Multi-Carrier Spread Spectrum*, IEEE 6th Int'l Symposium on Spread-Spectrum & Applications (ISSSTA 2000), (Sept. 6-8, 2000) (pre-print)

Exhibit	Description
1044	Armin Dekorsy & Volker Kuehn, *Exploiting Time and Frequency Diversity by Iterative Decoding in OFDM-CDMA Systems*, Seamless Interconnection for Universal Services, Global Telecommunications Conference. GLOBECOM'99, Vol. 5, pp.2576-2580 (Dec. 5, 1999).
1045	Volker Kuehn, et al., *Channel Coding Aspects in an OFDM-CDMA System*, ITG FACHBRICHT, pp.31-36 (Jan. 2000).
1046	Docket Control Order, *Genghiscomm Holdings, LLC v. Samsung Elecs., Am., Inc.*, No. 2:24-cv-0242-RWS-RSP, Dkt. 25 (Sept. 24, 2024).
1047	Complaint, *Genghiscomm Holdings, LLC v. Samsung Elecs., Am., Inc.*, No. 2:24-cv-0242-RWS-RSP, Dkt. 1 (Apr. 12, 2024).
1048	Ka-Hou Chan, *A General Method for Generating Discrete Orthogonal Matrices*, IEEE Access, Vol. 9, pp.120380-12391 (Sept. 7, 2021).
1049	Interview Agenda from U.S. Patent Application No. 16/194,290 (obtained from Patent Center)
1050	U.S. Patent No. 6,671,287
1051	U.S. Patent No. 6,785,258 to Garcia, Jr., et al. ("Garcia")
1052	Jack Dongarra, et al., *Guest editors introduction to the top 10 algorithms*, Computing in Science & Engineering 2(01) (2000), pp.22-23.
1053	U.S. Patent No. 6,263,017 to Miller
1054	U.S. Patent No. 6,175,551 to Awater et al.
1055	U.S. Patent No. 5,204,876 to Bruckert et al.
1056	3GPP TS 36.211 V8.7.0 (2009-05) 3rd Generation Partnership Project; Technical Specification Group Radio Access Network; Evolved Universal Terrestrial Radio Access (E-UTRA); Physical Channels and Modulation (Release 8)
1057	David Astély, et al., *LTE: The Evolution of Mobile Broadband*, IEEE Communications Magazine, pp.44-51 (Apr. 2009).
1058	M. Rinne, et al., *LTE, the radio technology path towards 4G*, Computer Communications 33 (2010) pp.1984-1906 (2010)

Exhibit	Description
1059	Declaration of Gary Swatzell including Exhibits A-D
1060	Guidance on USPTO's recission of "Interim Procedure for Discretionary Denials in AIA Post-Grant Proceedings with Parallel District Court Litigation" (Mar. 24, 2025).
1061	Docket Control Order, *Slyde Analytics LLC v. Apple Inc.*, No. 2:24-cv-00331-RWS-RSP, Dkt. 46 (E.D. Tex. Sept. 23, 2024)
1062	Docket Control Order, *Innomemory, LLC v. Truis Financial Corp.*, No. 2:24-cv-00146-RWS-RSP, Dkt. 38 (E.D. Tex. Sept. 24, 2024)
1063	Docket Control Order, *Husky Injection Molding Systems Ltd. V. Ningbo Ao Sheng Mold Co., Ltd. D/B/A Aosimi*, No. 2:24-cv-00348-RWS-RSP, Dkt. 46 (E.D. Tex. Oct. 21, 2024)
1064	Docket Sheet for *Partec Ag, et al v. Microsoft Corporation*, No. 2:24-cv-00433 (downloaded Mar. 25, 2025).
1065	Combined asserted patents in *Genghiscomm Holdings, LLC v. Samsung Elecs., Am., Inc.*, No. 2:24-cv-0242-RWS-RSP, Dkt. 25 (Sept. 24, 2024).
1066	File History of U.S. Patent Application No. 16/796,888 as obtained from Patent Center (excerpts).
1067	File History of U.S. Patent Application No. 16/199,221 as obtained from Patent Center (excerpts).
1068	File History of U.S. Patent Application No. 16/027,191 as obtained from Patent Center (excerpts).
1069	File History of U.S. Patent Application No. 15/642,850 as obtained from Patent Center (excerpts).
1070	Results of Docket Navigator Search for '842 Patent
1071	The title page, page V, page 14, pages 32-24, pages 130-137, page 140, and page 150 of Kaiser, Stefan. *Multi-Carrier CDMA Mobile Radio Systems - Analysis and Optimization of Detection, Decoding, and Channel Estimation*. Doctoral Dissertation. Department of Computer Science and Engineering, Technische Universität München. Dusseldorf, Germany: Verein Deutscher Ingenieure (VDI) Verlag, ©1998. Obtained from the University of Mannheim Library in Mannheim Germany.
1072	Results of Docket Navigator Search for the '227 Patent

Exhibit	Description
1073	A. Gusmão, et al., *Comparison of Two Modulation Choices for Broadband Wireless Communications*, VTC2000-Spring. 2000 IEEE 51st Vehicular Technology Conference Proceedings, Vol. 2, pp.1300-1305 (May 15, 2000).
1074	Exhibit 4 to Plaintiff's P.R. 3-1(c) Infringement Contentions (U.S. Pat. No. 11,075,786)
1075	U.S. Patent No. 11,700,162 to Shattil
1076	Simon Haykin, *Communication Systems* (4th Ed. John Wiley & Sons, Inc. 2001) (Chapter 4)
1077	U.S. Patent No. 7,436,896
1078	Results of Docket Navigator Search for '786 Patent
1079	Results of Docket Navigator Search for '568 Patent
1080	U.S. Patent Application No. 16/940,383 Electronic Acknowledgment Receipt and Certificate of Correction
1081	File History of U.S. Patent Application No. 16/940,383 as obtained from Patent Center.
1082	U.S. Patent No. 10,644,916
1083	U.S. Patent No. 10,574,497
1084	U.S. Patent No. 10,015,034
1085	U.S. Patent No. 9,800,448
1086	U.S. Patent No. 9,628,231
1087	Exhibit 6 to Plaintiff's P.R. 3-1(c) Infringement Contentions (U.S. Pat. No. 11,252,005)
1088	Results of Docket Navigator Search for '005 Patent
1089	Exhibit 7 to Plaintiff's P.R. 3-1(c) Infringement Contentions (U.S. Pat. No. 11,381,285)
1090	File History of U.S. Patent Application No. 17/183,114 as obtained from Patent Center (excerpts)
1091	File History of U.S. Patent Application No. 12/328,917 as obtained from Patent Center (excerpts)

Exhibit	Description
1092	File History of U.S. Patent Application No. 13/116,984 as obtained from Patent Center (excerpts)
1093	U.S. Patent No. 10,014,882
1094	U.S. Patent No. 7,430,257 to Shattil ("Shattil-257")
1095	Search Results for Patent Applications of Steve Shattil
1096	Results of Docket Navigator Search for '285 Patent

I, Harry V. Bims, Ph.D., declare as follows:

I. Introduction

1. I am over the age of 21 and am competent to make this declaration.

2. I have been retained on behalf of Petitioner Samsung Electronics Co., Ltd. ("Samsung") to provide my opinions regarding the validity of claims 1, 6, 7, 9, 10, 11, 13, 18, 19, 21, 22, 23, 25, 30, 31, 33, 34, and 35 (the "Challenged Claims") of U.S. Patent No. 11,252,005 (Ex-1001, the "'005 patent"). I submit this declaration based on my personal knowledge and in support of Samsung's *inter partes* review Petition (the "Petition") against the '005 patent.

3. I have been asked to provide my independent analysis of the '005 patent, in light of the materials cited below and my knowledge and experience in this field during the relevant period. I have been asked to consider whether the references cited in the Petition render obvious the invention described by the Challenged Claims.

4. I am being compensated at my normal hourly rate for my time. My compensation is not contingent in any way on the content of my analysis or the outcome of this proceeding. I am not and never have been an employee or agent of Samsung.

5. My opinions are based on my study, experience, and background discussed below, informed by my extensive experience regarding the subject matter

of the ’005 patent and the related prior art. For more than 30 years, since approximately 1981, I have studied, designed, and worked in the field of telecommunications, including wireless communications. During this period, I have designed and implemented various products involving cellular communication technology.

II. Qualifications

6. My findings are also based on my education as an electrical engineer. I received a B.S. in Computer and Systems Engineering from Rensselaer Polytechnic Institute in 1985.

7. I received an M.S. in Electrical Engineering in 1988 and a Ph.D. in Electrical Engineering in 1993, both from Stanford University. As a graduate student, I studied the principle of Digital Communications theory, including data modulation and demodulation, signal constellations and lattices, channel estimation, equalization, filtering, precoding, synchronization, and trellis coding.

8. My Ph.D. thesis addressed the application of trellis coding and precoding to a digital modulation system, and was titled “Trellis Coding for Multi-Level, Partial Response Continuous Phase Modulation with Precoding.”

9. After receiving my Ph.D. in 1993, I worked for Glenayre Technologies – Wireless Access Group, where I worked on applications for wireless communication, including inventing, designing, and building a patented two-way

pager test system and co-developing a wireless application protocol.

10. In January of 1999, I launched a technology consulting company, Protocomm Systems Inc., which focuses on the development of advanced wireless communications protocols and related software implementations for wireless product companies.

11. From 1999 to 2001, I was also the Director of Software Architecture for Symmetry Communications System. In this position, I was responsible for the software architecture for core SGSN (Serving GPRS Support Node) and GGSN (Gateway GPRS Support Node) products for the GPRS (Generic Packet Radio Services) market. I also held management responsibility for the Firmware, Hardware, Performance, and Systems Engineering Groups.

12. In 2001, I developed a business plan for building network infrastructure for Institute of Electrical and Electronics Engineers ("IEEE") 802.11 standard ("Wi-Fi") enterprise networks, and then later that year founded AirFlow Networks, Inc. where I invented and received eleven patents on a distributed antenna system design for wireless networks, based on the 802.11 wireless local area network specification.

13. I am currently the President of Protocomm Systems, LLC and Bims Laboratories, LLC, both of which I founded. As the President of Bims Laboratories, I perform technical research in wireless technology standards, such as UMTS, LTE/4G, 5G, Wi-Fi, Bluetooth, and other network communication protocols. I am

named as an inventor of twenty-three telecommunications related patents.

14. In addition, I am a named Technical Expert and former Vice-Chair and Secretary of the IEEE 802.16 Working Group, which develops technical standards for the wireless protocol commonly known as WiMax. I am also a voting member of the IEEE 802.11 Working Group (which develops technical standards for WiFi), and the IEEE 802.15 Working Group (which develops standards for a variety of specialty wireless networks). Within the IEEE 802.15 Working Group, I am the technical editor for IEEE 802.16t, an amendment to the WiMAX standard that supports long-range wireless networks for the railroad industry. Within the IEEE 802.11 Working Group, I routinely participate and vote on discussions relating to the design of wireless communications, including packet prioritization, transmission, acknowledgment, and retransmission.

15. Attached as Appendix A is my curriculum vitae, which includes a more detailed statement of my professional qualifications, including education, publications, honors and awards, professional activities, consulting engagements, and other relevant experience.

III. Materials Considered

16. As described in more detail below, based on my experiences, I understand and know the capabilities of a person of ordinary skill in the art of the ’005 patent in August 2004, when the provisional application to which the ’005

patent claims priority was filed. I have relevant personal knowledge and experience, in addition to working directly with many such persons in these fields during that time frame.

17. I have also relied on my review and analysis of the prior art cited in the Petition, information provided to me in connection with this case, and information I have independently reviewed.

18. In forming my opinions, I have been asked to review the ’005 patent including the specification and the Challenged Claims. I have also considered the materials cited herein, including those itemized in the Table of Exhibits that precedes this declaration.

19. My opinions are based on the materials I reviewed and my knowledge and professional judgment. My opinions have also been guided by my understanding of how a person of ordinary skill in the art would have understood the claims of the ’005 patent in the relevant time frame.

20. I also understand from counsel that the prior art references cited herein qualify as prior art under U.S. law.

21. In my analysis below, emphasis in my citations has been added unless otherwise noted. Likewise, annotations to images and figures (typically highlighting of various colors) has been added unless otherwise noted.

22. I reserve the right to supplement and amend any of my opinions in this

declaration based on documents, testimony, and other information that becomes available to me after the date of this declaration.

IV. Legal Standards

23. I am not a lawyer. My understanding of the legal standards to apply in reaching the conclusions in this declaration is based on discussions with counsel for Petitioner, my experience applying similar standards in other patent-related matters, and my reading of the documents submitted in this proceeding. In preparing this declaration, I have tried to faithfully apply these legal standards to the challenged claims.

24. I have been informed that there are two ways in which prior art may render a patent claim unpatentable. First, I have been informed that the prior art can "anticipate" a claim. Second, I have been informed that the prior art can render a claim "obvious" to a person of ordinary skill in the art. I understand that a claim is patentable if it was not anticipated and would not have been obvious by the prior art at the effective filing date of the patent. In this declaration, I only address obviousness.

25. I have been informed that a dependent claim is a patent claim that refers back to another patent claim. I have been informed that a dependent claim includes all of the limitations of the claim to which it refers.

26. I have been asked to provide my opinions as to whether the cited prior

art renders obvious the Challenged Claims of the ’005 patent from the perspective of a person of ordinary skill in the art at the ’005 patent’s earliest possible effective filing date in 2004, as described in more detail below.

27. I have been informed that in *inter partes* review proceedings, such as this one, the party challenging the patent bears the burden of proving unpatentability by a preponderance of the evidence. I understand that a preponderance of the evidence means “more likely than not.”

28. For purposes of this declaration, I have been asked to provide my opinions on issues regarding unpatentability. I have been informed of the following legal standards, which I have applied in forming my opinions.

A. Level of Ordinary Skill

29. I understand that my assessment of the claims of the ’005 patent must be undertaken from the perspective of what would have been known or understood by a person having ordinary skill in the art, reading the ’005 patent on its priority date and in light of the specification and file history of the ’005 patent. I will refer to such a person as a “POSITA.”

30. I understand that my analysis and opinions expressed in this declaration must be rendered based on the perspective of a POSITA as of the priority date of the ’005 patent. I also understand that a POSITA is a hypothetical person who is presumed to know the relevant art at the time of the alleged invention claimed in the

31. I further understand that in determining the level of ordinary skill in the art, I am to consider factors including:

- the type of problems encountered in the art or field of invention,
- prior art solutions to those problems,
- the rapidity with which innovations are made,
- sophistication of the technology, and
- the educational level of active workers in the field.

32. I have been instructed to assume a person of ordinary skill in the art is not a specific real individual, but rather a hypothetical individual having the qualities reflected by the factors discussed above.

33. I understand that a POSITA is a person of ordinary creativity, but not an automaton, and that a POSITA can often fit multiple patents or prior art references together like pieces of a puzzle as a result of this ordinary creativity. I also understand that I may consider the inferences and creative steps that a POSITA would employ. In addition, I understand that a POSITA would necessarily have been capable of understanding the scientific and engineering principles applicable to the pertinent art. I also understand that when I consider what would have been obvious to a POSITA, I am not considering what would have been obvious to me at the time, nor to the inventors, judges, laymen, those skilled in other arts, or to geniuses in the art.

B. Prior Art

34. I have been advised and understand that the information used to evaluate whether an invention was new and not obvious when made is generally referred to as "prior art." I understand that prior art includes patents and printed publications that existed before the earliest claimed priority date or the earliest filing date of the patent (which I have been informed is also called the "effective filing date").

35. I have been informed and understand that a patent or published patent application is prior art if it was filed before the effective filing date of the claimed invention.

36. I have also been informed and understand that a printed publication is prior art if it was publicly available before the earliest filing date and could be located by a POSITA exercising reasonable diligence.

C. Anticipation

37. I understand that a patent is invalid as anticipated if each and every feature of the claim is found, expressly or inherently, in a single item of prior art. I understand that anticipation by inherent disclosure is appropriate only when a prior art reference necessarily includes or discloses the unstated claim element. I also understand that the discovery of a new or previously unreported or unappreciated property of a prior art composition, or of a scientific explanation for how a prior art

composition operates, does not make the prior art composition patentably new to the entity or person that discovered the new property or mode of operation. I further understand that there is no requirement that a POSITA would have recognized the inherent disclosure at the time of the invention.

38. For anticipation by a prior art publication or document, I understand that the reference's description must enable a POSITA to practice the claimed invention without undue experimentation.

D. Obviousness

39. I understand that a claim may be invalid if the subject matter described by the claim as a whole would have been obvious to a POSITA in view of a prior art reference, or in view of a combination of references at the time the claimed invention was made. Therefore, I understand that obviousness is determined from the perspective of a POSITA, and that the asserted claims of the patent should be read from the point of view of such a person at the time the claimed invention was made. I further understand that a POSITA is assumed to know and to have all relevant prior art in the field of endeavor covered by the patent in suit and all analogous prior art. I understand that obviousness in an *inter partes* review proceeding is evaluated using a preponderance of the evidence standard, which means that the claims must be more likely obvious than nonobvious.

40. I also understand that an analysis of whether a claimed invention would

have been obvious should be considered in light of the scope and content of the prior art, the differences (if any) between the prior art and the claimed invention, and the level of ordinary skill in the pertinent art involved. I understand as well that a prior art reference should be viewed as a whole. I understand that in considering whether an invention for a claimed combination would have been obvious, I may assess whether there are apparent reasons to combine known elements in the prior art in the manner claimed in view of interrelated teachings of multiple prior art references, the effects of demands known to the design community or present in the marketplace, and/or the background knowledge possessed by a POSITA. I also understand that other principles may be relied on in evaluating whether a claimed invention would have been obvious, and that these principles include the following:

- A combination of familiar elements according to known methods is likely to be obvious when it does no more than yield predictable results;
- When a device or technology is available in one field of endeavor, design incentives and other market forces can prompt variations of it, either in the same field or in a different one, so that if a POSITA can implement a predictable variation, the variation is likely obvious;
- If a technique has been used to improve one device, and a POSITA would have recognized that it would improve similar devices in the same way, using the technique is obvious unless its actual application is beyond his or her skill;
- An explicit or implicit teaching, suggestion, or motivation to combine two prior art references to form the claimed combination may demonstrate obviousness, but proof of obviousness does not depend on or require showing a teaching, suggestion, or motivation to combine;

- Market demand, rather than scientific literature, can drive design trends and may show obviousness;
- One of the ways in which a patent's subject can be proved obvious is by noting that there existed at the time of invention a known problem for which there was an obvious solution encompassed by the patent's claims;
- Any need or problem known in the field of endeavor at the time of invention and addressed by the patent can provide a reason for combining the elements in the manner claimed;
- "Common sense" teaches that familiar items may have obvious uses beyond their primary purposes, and in many cases a POSITA will be able to fit the teachings of multiple patents together like pieces of a puzzle;
- A POSITA is also a person of ordinary creativity, not an automaton;
- A patent claim can be proved obvious by showing that the claimed combination of elements was "obvious to try," particularly when there is a design need or market pressure to solve a problem and there are a finite number of identified, predictable solutions such that a POSITA would have had good reason to pursue the known options within his or her technical grasp; and
- One should be cautious of using hindsight in evaluating whether a claimed invention would have been obvious.

41. I have been informed that the relevant time for considering whether a claim would have been obvious to a person of ordinary skill in the art is the time of invention. For my obviousness analysis, counsel for Petitioner instructed me to assume that the effective filing date is August 2, 2004, and that I should assume this is the date of invention for the Challenged Claims. My opinions would not change if I assumed a later date of invention.

V. Claim Construction

42. I understand that claim terms in an IPR are generally interpreted

according to their ordinary and customary meaning. I further understand that the claims are read in light of the patent's specification and that claims themselves often provide significant guidance as to the meaning of a particular term. I also understand that extrinsic evidence may be helpful when construing a claim term, but that it is less relevant than the intrinsic evidence and is often unreliable.

43. The prior art discussed herein would disclose the Challenged Claims under any reasonable constructions, and thus, I believe no formal claim constructions are required.

VI. The '005 Patent

A. General Overview and Background Concepts

44. The '005 patent relates to OFDM wireless communications and processes used in the context of OFDM. OFDM is many decades old.

45. For example, a Prasad textbook from 2000 illustrates an example of an OFDM transceiver:

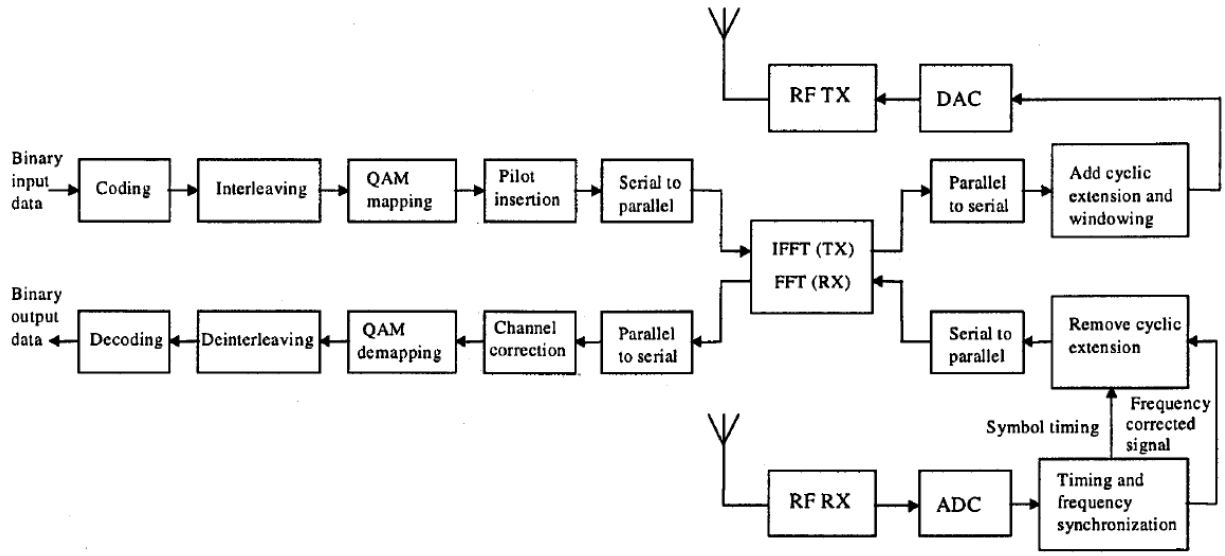

EX1015-Prasad, 48.

46. OFDM signals are formed at a transmitter using an inverse Fourier transform. It was typical to implement such an inverse transform using a computationally efficient technique called an inverse fast Fourier transform ("IFFT"). EX1015-Prasad, 42, 47-48.

47. After the IFFT, a guard interval including a cyclic prefix was also typically added to minimize intersymbol interference ("ISI") and intercarrier interference ("ICI"). EX1015-Prasad, 39-40.

48. It was also well known that OFDM systems suffer from high peak-to-average power ratios ("PAPR" or "PAR"). EX1013-Rohling, 1780; EX1014-Weinstein, 31-32. The '005 patent purports to reduce PAPR in OFDM systems by spreading input data using complex-valued codes obtained from a discrete Fourier transform ("DFT"). EX1001, Abstract, 8:64-9:1.

49. This, too, was conventional. Specifically, it was well known to persons of ordinary skill in that art ("POSITAs") that OFDM systems exhibited high PAPR, and techniques for reducing that high PAPR were known in the technical literature, including some of the references relied on herein. Indeed, various publications described using DFT spreading codes to reduce PAPR in OFDM systems years before the earliest claimed effective filing date of the '005 patent.

50. For example, in 1998, Brüninghaus (EX1016) observed that when an "FFT matrix" is used "as a spreading matrix for OFDM-CDM" signals, this "leads to a single-carrier system with guard interval." EX1016-Bruninghaus, 2332.

51. Similarly, in 2000, Bury (EX1007) explains that "Fourier spreading" can be "implemented by a discrete Fourier transform (DFT) operation" and the resulting transmission can have a "much lower" PAPR. EX1007-Bury, 857.

52. And by 2002, Galda (EX1004) had built on Bruninghaus's work to show "how an OFDM-FDMA uplink system can be combined with a user data spreading technique based on the DFT spreading matrix to reduce the PAR of the uplink signal without increasing the computational complexity of the transmitter." EX1004-Galda, 1738; *id.* at 1741 (identifying reference [3] as the Bruninghaus reference, EX016 herein).

53. The '005 patent's independent claims are generally directed to methods, apparatuses, and computer program products for producing "subcarrier

values" that equals the product of a "complex-valued code matrix" with a "matrix of data symbols," selecting subcarriers assigned to a device, modulating the subcarrier values onto those subcarriers, and producing a time-domain waveform for transmission over a wireless network by a user device. EX1001, claims 1, 13, 25.

54. FIG. 4A is a "block diagram of a spread-OFDM transmitter in accordance with an aspect of the disclosure:"

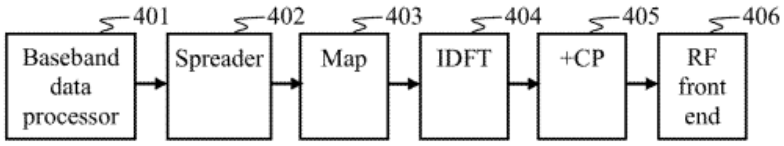

Figure 4A

EX1001 at 18:61-62.

55. A POSITA also would have been familiar with the use of subcarrier allocations and spacing assignments, which were being considered for the purposes of offering more control over uplink communications. For example, IEEE submissions in relation to WiMAX show that variable subcarrier spacings were under consideration:

Table 5: Example of numerical values for the OFDM parameters

RF Channel (MHz)	B	7	6	5	3,5	3	1,75
Sampling rate 1/T (MHz)	B	7	6	5	3,5	3	1,75
FFT size N	64	64	64	64	64	64	64
Subcarrier spacing fc (KHz)	B/64	109,375	93,75	78,125	54,688	46,875	27,344
FFT time Tc (µs)	64 x T	9,143	10,667	12,800	18,286	21,333	36,571
Cyclic prefix time Tp (µs)	16 x T	2,286	2,667	3,200	4,571	5,333	9,143
Symbol duration Ts (µs)	80 x T	11,429	13,333	16,000	22,857	26,667	45,714
Symbol rate fs (Ksym/s)	1 / Ts	87,500	75,000	62,500	43,750	37,500	21,875
Number of data subcarriers	48	48	48	48	48	48	48
Number of pilot subcarriers	4	4	4	4	4	4	4
Total number of subcarriers	52	52	52	52	52	52	52
Occupied BW (KHz)	53 x fc	5797	4969	4141	2898	2484	1449

EX1009-Francia, 11.

56. Another WiMAX proposal included the tables shown below, which indicate that a base station chooses a FFT size based on traffic (Table 3.5). The DFT size changes the OFDM subcarrier spacing, which is determined by dividing the sampling rate by the FFT size (Table 3.6). This leads to the subcarrier spacings identified below in Table 3.7:

Selection Level	Parameter	Symbol	Set of Values
System-Dependent Parameters	Channel Width (MHz)	W	1.75, 3.5, 7, 14, 1.5, 3, 6, 12
	Design Maximum Delay Spread (μsec)	d	4, 10,20
	Spectral Guard Factor	γ	0.18, 0.25
	Sample Rate (MSam/sec)	R	See Tables 2.1, 2.2
	Number of Pilot Tones	L	[Note 1]
	Number of Guard Tones	G	[Depends on adjacent channel constraints (Note 2)]
Link-Dependent Parameters	Number of QAM States	M	4, 16, 64
	Code Rate	r	1/2, 2/3, 3/4, 7/8
Traffic-Dependent Parameter	FFT Size	N	256, 512, 1024, 2048

Table 3.5 Parameters and Values Defining Operating Modes for MC Systems

Dependent Parameter	Symbol	Formula	Note
Number of Samples in Cyclic Prefix+Postfix	C	2 • R • d	2.
Number of Payload Subcarriers	P	N - G - L	
Frequency Spacing of Available Channel Estimates Measurable In One Block	e	W / L	
OFDM Symbol Period	S	(N + C - w) / R	
OFDM Subcarrier Spacing	s	R / N	3.

Table 3.6 Guidelines for Subsidiary Parameters In MC Systems

FFT Size N	Sample Rate R (MSam/sec)	Subcarrier Spacing (Hz)
256	1.25	4882.813
	1.5	5859.375
	2.5	9765.625
	3	11718.750
	5	19531.250
	6	23437.500
	10	39062.500
	12	46875.000
512	1.25	2441.406
	1.5	2929.688
	2.5	4882.813
	3	5859.375
	5	9765.625
	6	11718.750
	10	19531.250
	12	23437.500
1024	1.25	1220.703
	1.5	1464.844
	2.5	2441.406
	3	2929.688
	5	4882.813
	6	5859.375
	10	9765.625
	12	11718.750
2048	1.25	610.352
	1.5	732.422
	2.5	1220.703
	3	1464.844
	5	2441.406
	6	2929.688
	10	4882.813
	12	5859.375

Table 3.7 Subcarrier Spacing in MC Mode

EX1010-Langley, 17-19 (describing "Traffic-Dependent Parameters").

57. The Langley reference also teaches that the ability to adjust transmission parameters "greatly increases the efficiency of spectrum utilization." EX1010-Langely, 17.

58. Subcarrier spacing selection proposals were also considered during the early development of the LTE standard by 2002. As one example, Doufexi teaches "key link parameters of OFDM for a potential 4G cellular standard" included "subchannel spacing." EX1003-Doufexi, 1.

59. Since 4G was going to "be deployed in a wide range of environments, a fixed set of parameters [would not have been] capable of achieving high performance in all cases." EX1003-Doufexi, 1. Accordingly, Doufexi taught that subcarrier spacing should be used for "dynamically adapting one or more of the" parameters, providing the example in Table 2:

Table 2. OFDM Parameters for 4G.

Parameter	Value 1	*Value 2*
Operating Frequency	2GHz	*2GHz*
Bandwidth *(B)*	4096 kHz	*4096 kHz*
Useful Symbol Duration *(T)*	62.5 µs	*125 µs*
Guard Interval Duration *(T_g)*	15.625 µs *(T/4)*	*31.25µs (T/4)*
Total Symbol Duration *(T_{symbol})*	78.125 µs (with GI =*T/4*)	*156.25 µs (with GI =T/4)*
Inner Channel Coding	Punctured 1/2 rate convolution code, Constraint length 7, $\{133, 171\}_{octal}$	*Punctured 1/2 rate convolution code, Constraint length 7, $\{133, 171\}_{octal}$*
FFT Size	256	*512*
Number of data sub-carriers *(N_D)*	216	*432*
Sub-carrier spacing *(Δ_f)*	16 kHz	*8 kHz*

EX1003-Doufexi, 1-2.

60. A Lucent LTE submission also proposed variable subcarrier spacings in a baseline OFDM system, as Table 4 below illustrates:

System Parameters	Configuration 1	Configuration 2	Configuration 3
Suitable deployment environment	Indoor, Pedestrian A	Vehicular A	Pedestrian B
Symbol per 0.67 msec time slot	12	6	3
Number of FFT points	256	512	1024
Number of sub-carriers	256	512	1024
OFDM Symbol period (usec)	55.6	111	222
Sub-carrier spacing (kHz)	19.2	9.6	4.8
Guard band on each side of the 5MHz band (kHz)	42.4	42.4	42.4
Sampling period (usec)	0.20345025	0.20345025	0.20345025
Guard time $T_g=T_{prefix}+T_{postfix}$ (samples/usec)	17/3.46	34/6.92	68/13.8
Cyclic prefix length (samples/usec)	5/1.017252604	16/3.255204	50/10.17252604
Power amplifier ramp-up and ramp-down period (samples)	6 samples each	9 samples each	9 samples each

Table 4. Parameters for baseline OFDM systems

EX1006-Lucent, 5.

61. Thus, a POSITA would have been familiar with tailoring the number of subcarriers and their spacing to suit different environments and traffic loads.

B. Prosecution History and Effective Filing Date

62. I understand that Petitioner contends the ’005 patent is not entitled to an effective filing date before July 27, 2020, or alternatively is not entitled to an effective filing date before May 9, 2016. I provide a very brief background on the prosecution history below, as it relates to this issue.

63. The flow chart below illustrates the alleged priority chain of the ’005 patent:

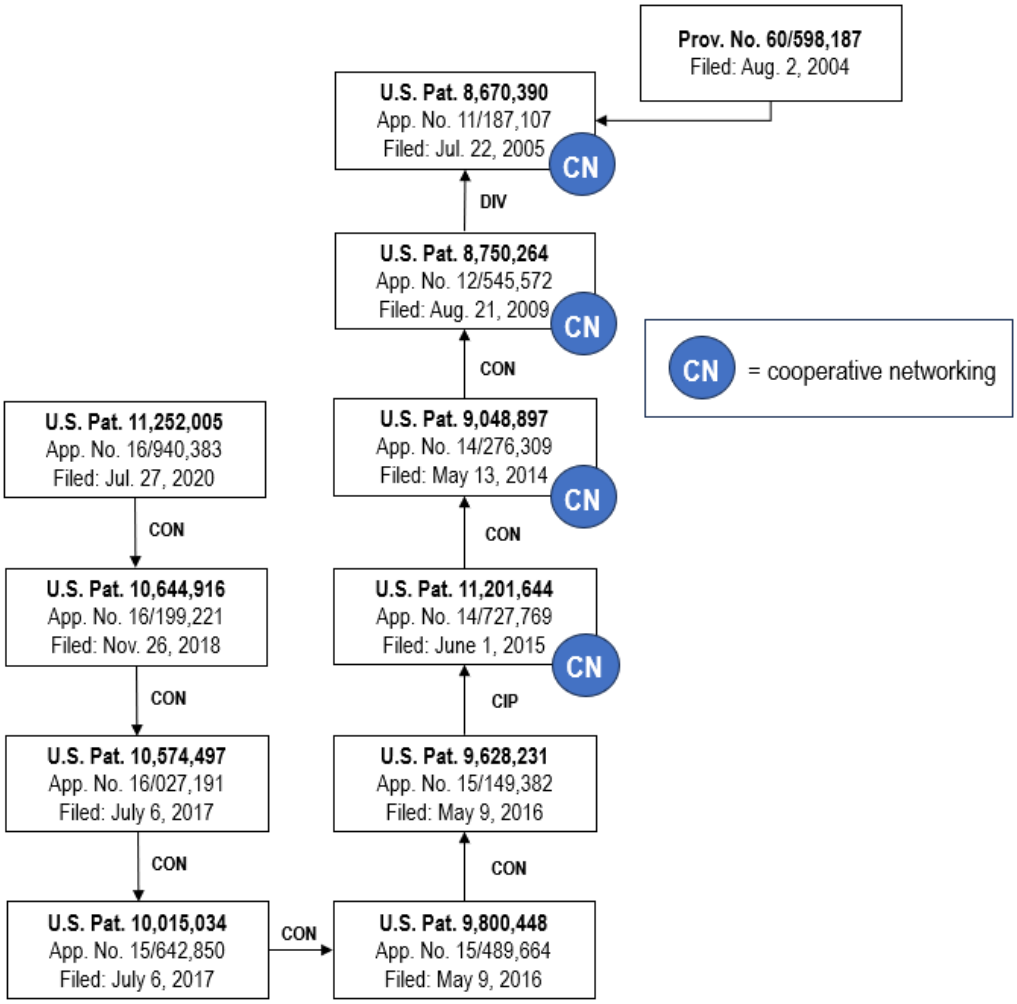

In the figure above, some of the applications are labeled with a "CN." That label stands for "cooperative networking," and indicates that those applications address different technologies.

64. To be entitled to an effective filing date of August 2, 2004, I understand that the '005 patent must have been copending with its parent applications. It was not. The patent's immediate parent application had already issued by July 27, 2020. EX1082, cover; *see also* EX1083 (issued Feb. 25, 2020); EX1084 (issued July 3,

2018); EX1085 (issued October 24, 2017); EX1086 (issued April 18, 2017). I understand that the ’005 patent cannot claim priority to these earlier filing dates because they were not copending with the ’005 patent.

65. I also understand that the ’005 patent cannot claim priority back to 2004 if the applications in the patent’s priority chain do not disclose the subject matter of the ’005 patent’s claims. That is the case here.

66. More specifically, the independent claims of the ’005 patent all require “selecting a set of subcarriers assigned for use by a user device.” EX1001, claims 1, 13, 25. This feature is not described in the parent applications. For example, the ’769 application describes dividing a “WWAN transmission . . . into spectral components (such as denoted by f_1, f_2, and f_3 by the WLAN group,” and the wireless terminals “may be adapted to transmit one or more associated predetermined spectral components to the WWAN node,” but these spectral components are not described as being subcarriers that are “selected” or “assigned for use by a user device.” EX1030, 247.

67. The ’769 application also describes a different invention than what is claimed in the ’005 patent. The application was titled “Cooperative Wireless Networks” and it relates to “providing cooperative signal processing between a plurality of wireless terminal devices.” EX1030, 233-234; *see id.* at 311 (Abstract), 304-05 & 308 (indicating claims required “a plurality of geographically distributed

wireless terminals").

68. The '769 application also addresses problems associated with "power, cost, and size constraints" that made implementing "antenna arrays on mobile wireless terminals . . . impractical" by coordinating between multiple wireless terminals so they behave as though they are one antenna array. EX1030, 235-36. The embodiments described in the application also consistently utilize multiple wireless terminals operating together to transmit or receive signals.

69. Conversely, the claims of the '005 patent relate to transmitters that do not depend in any way on other transmitters. Therefore, they are directed to different subject matter than the '769 application.

C. The Challenged Claims

70. The Challenged Claims are claims 1, 6, 7, 9, 10, 11, 13, 18, 19, 21, 22, 23, 25, 30, 31, 33, 34, and 35. Claims 1, 13, and 25 are independent.

D. Person of Ordinary Skill in the Art ("POSITA")

71. A POSITA in the August 2004 time frame would have had either a Master's degree in electrical engineering or a related field, or a Bachelor's degree in electrical engineering or a related field with three years of experience in wireless communication systems, signal processing, and related technologies. A POSITA would have been familiar with the use of Orthogonal Frequency Division Multiplexing (OFDM) and Orthogonal Frequency Division Multiple Access

(OFDMA) in evolving wireless communication standards and 3GPP standards. Techniques including discrete Fourier transform ("DFT") spreading, modulation comprising the use of inverse discrete Fourier transforms ("IDFT"), and cyclic prefix/guard interval insertion would have been well known to a POSITA.

72. A POSITA would have recognized that DFT-spreading was used to reduce peak-to-average power ratio, including as compared to other spreading codes like Walsh-Hadamard codes, as detailed further with respect to the prior art discussed herein.

73. Additional techniques and tools understood by a POSITA are discussed in this Declaration.

74. I also understand and have been informed that Petitioner may contend that the '005 patent is not entitled to its earliest-claimed effective filing date, and instead has an effective filing date of July 27, 2020 or May 9, 2016. I have been asked for my opinion of whether the level of ordinary skill in the art would be lower or higher as of that date and whether any difference would be material. I believe the education and experience levels of persons having ordinary skill would remain the same, though naturally more prior art would become available, familiar, and known to a POSITA with the passage of time. I do not think that a difference in the filing date would materially impact my opinions as follows unless otherwise noted.

VII. Overview of the Prior Art

75. I understand that the Petition addresses three obviousness grounds:

Ground	'005 Patent Claim	Basis
Grounds 1-2	1, 6, 9, 10	Galda
Ground 3	13, 18, 21, 22, 25, 30, 33, 34	Galda in view of Dowling
Ground 4	7	Galda in view of Doufexi
Ground 5	19, 31	Galda in view of Dowling and Doufexi
Ground 6	7	Galda in view of Lucent
Ground 7	19, 31	Galda in view of Dowling and Lucent
Ground 8	7	Galda in view of Ma
Ground 9	19, 31	Galda in view of Dowling and Ma
Ground 10	11	Galda in view of Bury
Ground 11	23, 35	Galda in view of Dowling and Bury

76. I provide a brief overview of the prior art references identified in Petitioner's grounds below.

A. Galda (EX1004)

77. Galda is an article published in proceedings for the IEEE's 55th Vehicular Technology Conference. The papers published in these proceedings were available by at least May 6, 2002, as well as during the conference (between May 6

and 9, 2002) for review and purchase. EX1059. In particular, I understand from counsel that the conference proceeding papers were distributed to attendees at the conference, the conference was open to the public, there were no confidentiality restrictions, and the papers were available for review and purchase there as well. I understand this means that Galda qualifies as prior art. I also understand that the Galda reference itself was available in engineering libraries by at least June 26, 2002, as well as available from the IEEE website by at least August 7, 2002. I also understand that Galda was cataloged and categorized by subject matter, including "mobile communication systems." This categorization would have enabled a POSITA interested in wireless communication systems, signal processing, and related technologies to find Galda through reasonably diligent search efforts. Thus, I understand that Galda qualifies as prior art.

78. Galda discloses an OFDM transmitter that reduces PAPR (PAR) using "OFDM-FDMA multiple access … combined with a data spreading technique based on a Discrete Fourier Transform spreading matrix using only the user specific subcarriers." EX1004-Galda, 1737. Galda's transmitter is illustrated below.

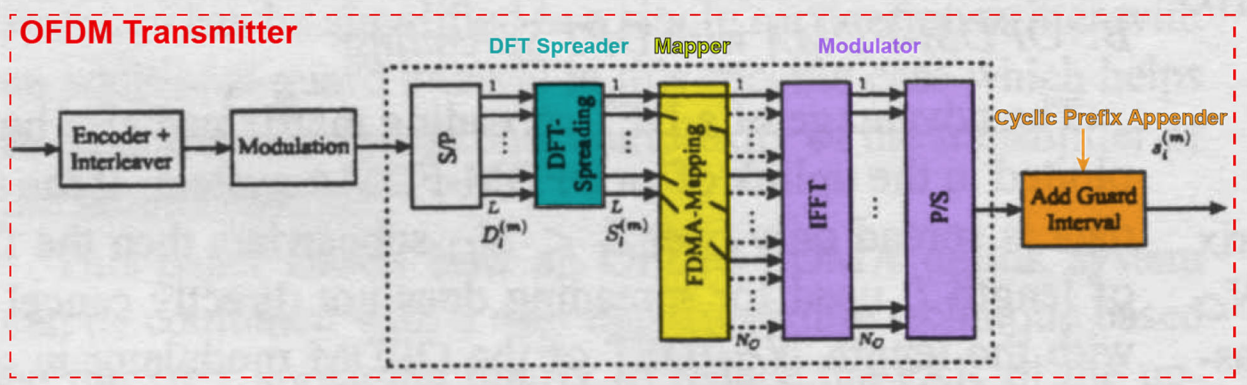

EX1004-Galda, 1740 (annotated).

79. Galda is analogous art to the '005 Patent because it relates to "precoding multicarrier waveforms." EX1001, 1:26-27. This precoding applies coefficients of a "DFT matrix" to spread data symbols before mapping and OFDM modulating them. EX1004-Galda, 1737, 1740 (Fig. 6(a)); *see* EX1001, 4:3-5, 21:44-47.

80. Likewise, Galda is analogous art because Galda solved one of the problems facing the alleged inventor of the '005 patent in the same way, namely by spreading symbols using complex-valued codes from a DFT. EX1004-Galda, 1737; *see* EX1001, 4:3-5, 21:44-47.

B. Doufexi (EX1003)

81. Doufexi is a paper from *The 13th IEEE International Symposium on Personal, Indoor and Mobile Radio Communications*. EX1003. I understand that Exhibit 1003 was obtained from the Linda Hall Library, where it was cataloged into by December 30, 2002. I also understand that Doufexi was added to the IEEE online

database by December 10, 2002.

82. I further understand that Doufexi was cataloged by subject matter including "Wireless communication systems; Mobile Communications systems." This categorization would have enabled a POSITA interested in wireless communication systems and related technologies to find Doufexi through reasonably diligent search efforts. Thus, I understand that Doufexi qualifies as prior art.

83. Doufexi teaches that "OFDM is proposed as a leading candidate for a 4G cellular communications standard." EX1003, 192. The reference also discloses "the key link parameters of OFDM for a potential 4G cellular standard" including "subchannel spacing." EX1003-Doufexi, 192. Doufexi also teaches that "a fixed set of parameters" would not "achieve high performance in all cases," and proposes different parameters for different scenarios. EX1003-Doufexi, 192-93.

84. Doufexi is analogous art to the '005 patent. A POSITA would have known this to be the case because Doufexi is in the field of wireless communications networks, and specifically relates to OFDM networks and systems. EX1003-Doufexi, 192; EX1001, 1:25-27, 18:61-62.

85. Doufexi is also reasonably pertinent art because it addresses one of the same problems faced by the alleged inventor of the '005 patent in relation to improving OFDM system and spectral efficiency. EX1003-Doufexi, 192 (variable guard time can improve efficiency), 193 ("[c]hannel coding also affects bandwidth

efficiency"); *see* EX1001, 1:47-67.

C. Lucent (EX1006)

86. I understand that Lucent is a technical contribution submitted to the 3GPP TSG RAN Working Group 1 (WG1) meeting TSGR1 #28bis, which was held on October 8th and 9th, 2002. EX1006-Lucent, 1.

87. I also understand that Lucent was publicly available on the 3GPP public file server, from which an interested member of the public exercising reasonable diligence could freely access them, and that Lucent was uploaded to the 3GPP public file server on October 8, 2002 and distributed to the members of the RAN WG1 email list on the same day.

88. A POSITA would have located Lucent with a reasonably diligent search based on its categorization on the 3GPP website. The 3GPP website was well known by those of ordinary skill in the art, and was run by a prominent organization in the field. Thus, I understand that Lucent qualifies as prior art.

89. Lucent provides a proposal for a baseline OFDM system. EX1006-Lucent, 1. Lucent discloses "three reference configurations" for the proposed "baseline OFDM system." EX1006-Lucent, 5. These are shown in the table below:

System Parameters	Configuration 1	Configuration 2	Configuration 3
Suitable deployment environment	Indoor, Pedestrian A	Vehicular A	Pedestrian B
Symbol per 0.67 msec time slot	12	6	3
Number of FFT points	256	512	1024
Number of sub-carriers	256	512	1024
OFDM Symbol period (usec)	55.6	111	222
Sub-carrier spacing (kHz)	19.2	9.6	4.8
Guard band on each side of the 5MHz band (kHz)	42.4	42.4	42.4
Sampling period (usec)	0.20345025	0.20345025	0.20345025
Guard time $T_g=T_{prefix}+T_{postfix}$ (samples/usec)	17/3.46	34/6.92	68/13.8
Cyclic prefix length (samples/usec)	5/1.017252604	16/3.255204	50/10.17252604
Power amplifier ramp-up and ramp-down period (samples)	6 samples each	9 samples each	9 samples each

EX1006-Lucent, 5.

90. Lucent teaches that different configurations are utilized based on their "deployment environment[s]." EX1006-Lucent, 5; *id.*, 7 ("We have suggested an OFDM system with multiple configurations that can be deployed in different environments.").

91. A difference between each of the three configurations proposed by Lucent is the subcarrier spacing. The spacing options are as follows: 19.2 kHz, 9.6 kHZ, and 4.8 kHz. EX1006-Lucent, 5. Lucent therby shows that different use cases call for different subcarrier spacings and other transmission parameters.

92. Lucent is analogous art to the '005 patent because it is in the same field

of endeavor (OFDM wireless communication networks and techniques). EX1006-Lucent, 1 ("Proposed Baseline OFDM Systems for Study"); EX1001, 1:25-27, 18:61-62.

93. Lucent is also reasonably pertinent art because it solves a problem facing the alleged inventor of the '005 patent, specifically a problem related to efficient Fourier transform operations. EX1006-Lucent, 3 (analyzing "the most efficient choices of the FFT operations"); *see* EX1001, 22:28-30 (implementing "DFT spreading as a fast algorithm (FFT) can provide an efficient alternative to conventional Carrier Interferometry (CI) coding").

D. Bury (EX1007)

94. Bury is a paper authored by Andreas Bury et al. titled "*Comparison of Amplitude Distributions for Hadamard Spreading and Fourier Spreading in Multi-Carrier Code Division Multiplexing*," published by IEEE in 2000 and entered into the Linda Hall Library's catalog by at least January 12, 2001. I understand that Bury was cataloged by subject matter categories, including telecommunications, data transmission systems, computer networks, and broadband communication systems. These categorizations would have enabled a POSITA interested in wireless communication systems, signal processing, and related technologies to find Bury through reasonably diligent search efforts. Thus, I understand Bury qualifies as prior art.

95. Bury discloses an OFDM transmitter in Figure 1. As shown below, that figure discloses elements for spreading (highlighted teal), mapping (yellow), modulating (purple "IDFT" element), and a cyclic prefix element (orange) for adding a cyclic prefix/guard interval:

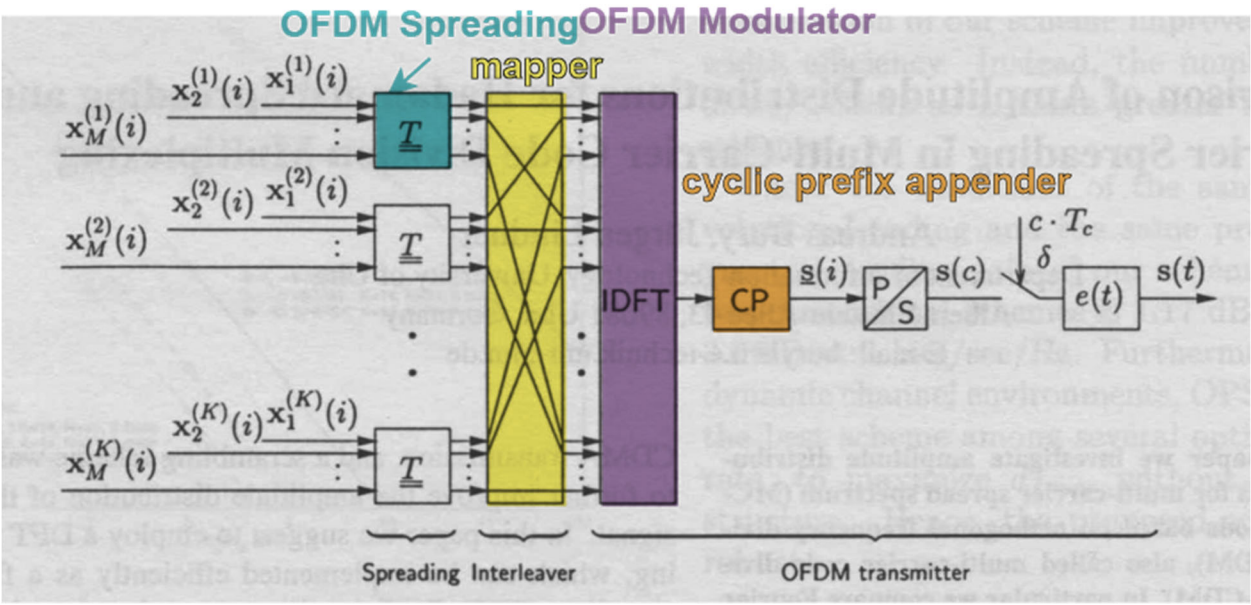

EX1007-Bury, 858 (Fig. 1(a) (annotated)).

96. Bury also teaches that DFT-spreading codes/matrices should be used instead of conventional Walsh-Hadamard codes in order to improve overall performance by reducing "peak-to-average power ratio" (i.e., "PAPR"). EX1007-Bury, 857, 860.

97. Bury is analogous art to the '005 patent because it relates to applying DFT-spreading in the context of OFDM wireless communications systems, like the '005 patent. EX1007-Bury, 857-60; *see* EX1001, Abstract, :25-27, 21:9-12, 21:30-

33. Likewise, Bury is analogous art because the authors solved the same problem of reducing PAPR in OFDM communications that the alleged inventor of the ’005 patent sought to address. EX1007-Bury, 857, 860 (solving that problem by using DFT-spreading); *see* EX1001, 4:24-42.

E. Ma (EX1033)

98. I understand that Ma is U.S. Patent Application Publication, filed on February 20, 2015, published on September 10, 2015, and claiming priority to Provisional No. 61/949,805 filed March 7, 2014. EX1033-Ma, cover. Thus, I understand that Ma qualifies as prior art if Petitioner prevails on its arguments regarding the effective filing date of the ’005 patent.

99. Ma teaches variable subcarrier spacings and symbol durations in OFDM systems. EX1033-Ma, 0002. Ma partitions frequency and time planes into “multiple access block” (“MAB”) regions where each MAB has a different subcarrier spacing and symbol duration. EX1033-Ma, 0004, 0028, 0030-0031, Fig. 5. This increases system flexibility. EX1033-Ma, 0003.

100. Ma is analogous art to the ’005 patent because both relate to OFDM wireless communications networks and techniques. EX1033-Ma, 0002, 0033; EX1001, 1:25-27, 18:61-62.

101. Ma is also reasonably pertinent to the problem facing the alleged inventor of the ’005 patent, as both references seek to improve OFDM system and

spectral efficiency. EX1033-Ma, 0003, 0023, 0036; EX1001, 1:47-67.

F. Dowling (EX1042)

102. Dowling is U.S. Patent No. 6,597,745 which was filed on April 6, 1999 and issued July 22, 2003. EX1042-Dowling, cover. I understand Dowling qualifies as prior art.

103. Dowling discloses multicarrier modulation and OFDM systems that may be implemented as software modules. Such modules execute on programmable processor architectures; in other words, transmitters, receivers, and precoders may be implemented in either hardware or software. EX1042-Dowling, 3:46-50, 5:66-6:1.

104. Dowling is also analogous art to the ’005 patent at least because it both are in the field of wireless communications, and more specifically relate to OFDM wireless communications and discrete multitone communications. EX1042-Dowling, Abstract, 1:6-12 (“field” relates to “data transmission,” more specifically to a “precoder” for multicarrier (e.g., OFDM) systems), 21:62-64 (invention “applied to other FFT based multicarrier modulation and OFDM systems.”); *see* EX1001, 1:25-27, 5:23-28, 18:61-62.

VIII. GROUNDS 1-2: Claims 1, 6, 9, and 10 are (Ground 1) anticipated by and (Ground 2) obvious over Galda

A. Challenged Claims

1. Independent Claim 1

[1Pre] "A method for communication in a wireless network, comprising:"

105. Galda teaches the preamble.

106. Galda discloses an OFDM "transmission technique." EX1004-Galda, 1737. That transmission technique includes spreading data symbols with "a Discrete Fourier Transform (DFT) spreading matrix" before mapping and OFDM modulation, and ultimately communication in a wireless transmission network as shown below where "Mobile Terminal" transmits wirelessly to "Base Station":

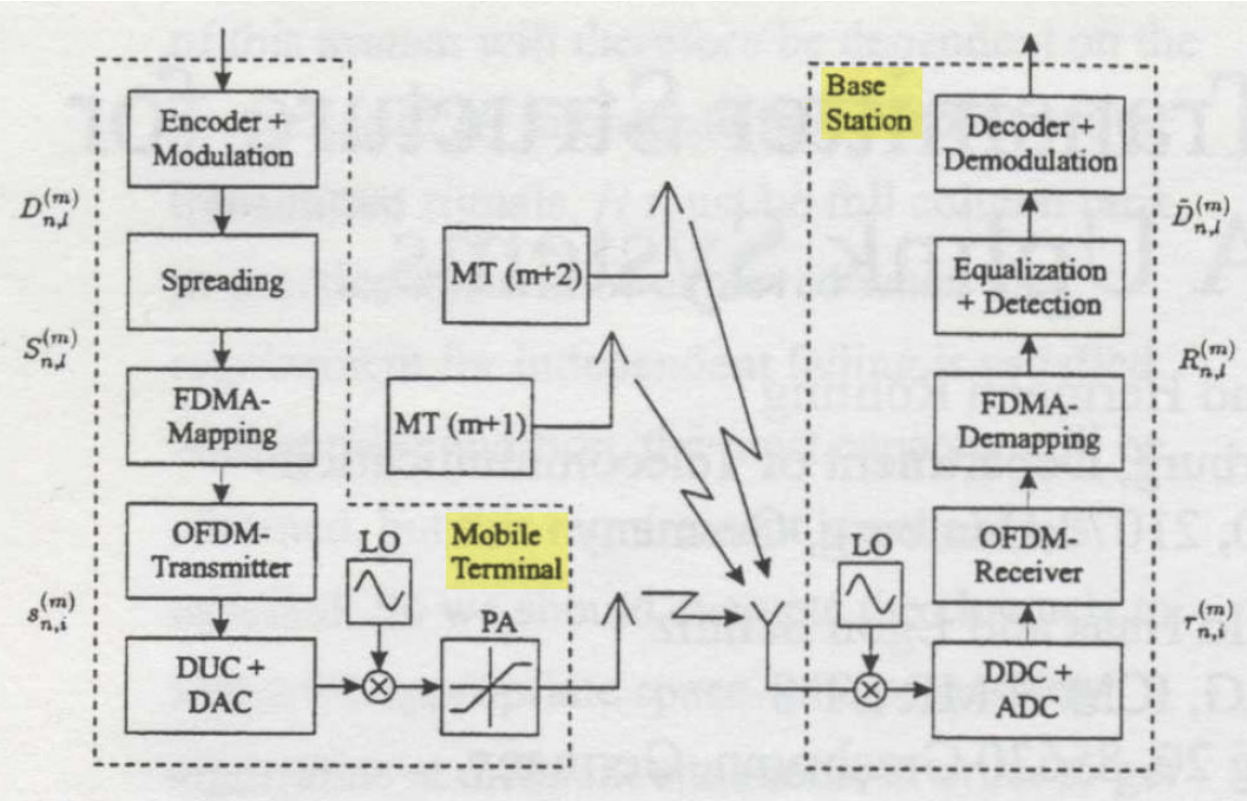

EX1004-Galda, 1738 (Fig. 1).

107. Here I note that I am relying on Galda's more flexible transmitter embodiment in which the channel spacings are not required to be equidistant for each user. EX1004-Galda, 1738 ("[I]n principle, the set of subcarrier[s] assigned to each user can be composed of <u>any L out of N_C subcarrier that have not been assigned to another user.</u>" (emphasis added); *see id.*, 1739 ("If the user data is spread over only $L<N_C$ subcarriers then the DFT of length L does not directly cancel out with the length N_C IDFT of the OFDM modulator in general.").

108. Although Galda discusses the option of using a simplified transmitter (EX1004-Galda, 1738-39, Fig. 6(b)), a POSITA would have understood that

allowing flexible subcarrier allocation and channel spacings depending on channel conditions, deployment scenarios, and the payload to be transmitted on the uplink would have improved system flexibility. *See, e.g.*, EX1003-Doufexi, §§III-IV (disclosing variable subcarrier spacings and the need for flexibility when implementing multi-carrier, multi-rate transmission); EX1006-Lucent, Table 4 (disclosing various subcarrier spacing options).

109. A system that can flexibly adjust its subcarrier allocation can increase its system capacity by reducing its subcarrier spacings when channel conditions improve (for example when mobile devices stop moving). In frequency selective channels, the wireless channel conditions experienced by the communications network causes a varying delay spread during each symbol period. The longer the symbol period, the less negative effect a particular Doppler amount and a particular delay spread amount have on the ability of a receiver to properly receive the transmitted symbol, thereby improving the performance of the network and reducing the interference it experiences. The negative effects of Doppler and delay spread include frequency offset, phase noise, and inter-symbol interference (ISI). In addition, the longer the symbol period, the larger the amount of time in the symbol period can be dedicated to a guard interval, in which the latter portion of a transmitted symbol is repeated. This guard interval is designed to create a buffer zone within which the delay spread can be contained, thereby further reducing its

negative effect on the ability of a receiver to properly receive the transmitted symbol.

110. One method for achieving a longer symbol period within a fixed bandwidth is to reduce the sub-carrier spacing parameter of OFDM transmissions. When the sub-carrier spacing is reduced, the symbol period of the OFDM transmission is necessarily longer, in order to preserve orthogonality between the subcarriers. However, a longer symbol period not only increases implementation complexity and sensitivity, it also reduces the rate at which symbols can be transmitted, which reduces the data rate capacity of the communication system. Thus, an OFDM communication system must optimally adjust its sub-carrier spacing parameter in order to balance the need to mitigate the negative effects of delay spread against the need to maximize the symbol rate as the delay spread amount of the frequency-selective channel dynamically changes.

111. For example, Doufexi is a prior art reference that "identifies and describes the key link parameters of OFDM for a potential 4G cellular standard." EX1003-Doufexi, 1. Doufexi explains that "a fixed set of parameters is not capable of achieving high performance in all cases. A system capable of dynamically adapting one or more of the above parameters may offer superior performance." EX1003-Doufexi, 1.

112. Subcarrier spacing was one of the key candidate parameters considered by Doufexi in its study of the effect of dynamic adjusting the OFDM parameters in

a communication system. In particular, Table 2 in Doufexi shows two columns of parameters that were compared in its study; the Value 1 column, and the Value 2 column. The operating frequency parameter and the bandwidth parameter are the same. However, because the subcarrier spacing parameter in the Value 2 column is half that of the subcarrier spacing parameter in the Value 1 column, the remaining parameters in Value 2 column, including the FFT size, are twice the value of the same parameters in the Value 1 column.

113. As a result, the set of parameter values in the Value 2 column can withstand greater delay spread and interference caused by the communication channel than the set of parameter values in the Value 1 column. "A FFT size of N=512 is also under consideration, since it will improve guard interval efficiency and can handle more ISI." EX1003-Doufexi, 2.

114. Lucent is another prior art example discussing flexible subcarrier spacing. The Lucent reference is a document submitted to the 3GPP TSG-RAN1 working group for discussion, titled "Proposed Baseline OFDM Systems for Study. EX1006-Lucent, 1. Multiple configurations of parameters such as sub-carrier spacing were considered in the OFDM system studied in Lucent. "We have suggested an OFDM system with multiple configurations that can be deployed in different environments." EX1006-Lucent, 7.

115. In this Lucent reference, it is stated that "In order to design the OFDM

system properly, the symbol duration should be less than the coherence time and the sub-carrier spacing should be less than the coherence bandwidth." EX1006-Lucent, 1. However, Lucent explains that there must be a balance in selecting the sub-carrier spacing. "The sub-carrier spacing should be large enough to provide robustness against frequency offset and phase nose, but it also has to be small enough such that the sub-carrier experiences flat fading." EX1006-Lucent, 1.

116. However, the assumed delay spread for the channel varies depending on the channel conditions, which causes the optimal sub-carrier spacing to change. "We suggest that a maximum delay spread of 10 usec be considered for the design of the OFDM system . . . Note that it is observed that in a simulcast environment, the signal coming from the other cell is most likely the dominant multi-path which has longer delay than the non-simulcast signal. Therefore, larger delay spread should be considered if multicast and simulcast services are of interest." EX1006-Lucent, 2. "The optimal value of sub-carrier spacing can be determined later after the adjacent channel emission requirement has been agreed." EX1006-Lucent, 3.

117. This determination will differ as the delay spread (also called multipath) amount of the channel changes. "To allow shorter symbol durations when the multipath is less severe, this would result in a wider sub-carrier spacing which would make the system more immune to frequency offset." EX1006-Lucent, 5. This is because the stationarity of the channel model makes it easier to equalize the

channel. Alternatively, increasing the cyclic prefix length when channel conditions deteriorate (for example when the delay spread increases), reduces the negative impact of inter-symbol interference on receiver reliability. When subcarrier spacing and cyclic prefix length cannot be changed in the system, a one-size-fits-all system design, such as Galda, would be suboptimal for most of the system operation, despite the flexible sharing of sets of subcarriers between users.

118. Importantly, Galda still achieves the PAPR/PAR improvements using the transmitter illustrated in Galda's Fig. 6(a), because the PAPR-related improvements result from using DFT spreading as long as the minimum separation between subcarriers used by the spreading technique exceeds the coherence bandwidth, as this causes the spreading to occur over an AWGN channel, and not a flat-fading channel. EX1004-Galda, 1737-38.

119. Thus, Galda teaches the preamble.

[1A] "producing a set of subcarrier values that equals a product of a complex-valued code matrix with a matrix of data symbols;"

120. Galda teaches this limitation.

121. Galda produces a set of subcarrier values. These subcarrier values are labeled $S_l^{(m)}$ (as in "L complex transmit symbols $S_l^{(m)}$") in Galda; sometimes, the column vector notation is used ("$\vec{S}^{(m)}$"). EX1004-Galda, 1738. The set of subcarrier values are referred to as "L complex transmit symbols." EX1004-Galda, 1738. The

set of subcarrier values the output of Galda's "DFT spreading" block:

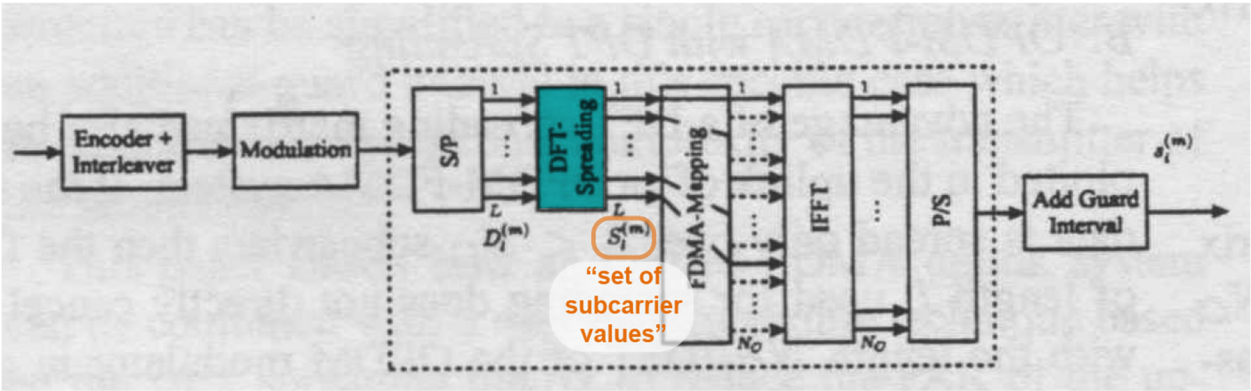

EX1004-Galda, 1740 (Fig. 6(a)).

122. Galda's set of subcarrier values ("L complex transmit symbols $S_l^{(m)}$," (or equivalently $\vec{S}^{(m)}$)) equal a product of a complex-valued code matrix ("unitary spreading matrix $[C]$") with a matrix of data symbols ("complex modulation symbols" $D_l^{(m)}$, which are also represented as column vector (matrix) $\vec{D}^{(m)}$). EX1004-Galda, 1738.

123. Galda further discloses:

> The L modulation symbols are spread over the L user specifically allocated subcarrier with an unitary spreading matrix $[C]$ resulting in L complex transmit symbols <u>The spreading operation can be denoted mathematically by the following simple matrix multiplication</u>
>
> $$\vec{S}^{(m)} = [C]\vec{D}^{(m)} \qquad (1)$$
>
> where each complex transmit symbol $S_l^{(m)}$ is calculated by

the sum of L user modulation symbols $D_l^{(m)}$ weighted by L orthogonal code vectors $\vec{C_l} = (C_{l,0}, C_{l,1}, \dots, C_{l,l})$ with $l = 0, \dots, L-1$

$$S_l^{(m)} = \sum_{\nu=0}^{L-1} C_{l,\nu} D_\nu^{(m)} \quad \text{for} \quad l = 0, \dots, L-1. \qquad (2)$$

EX1004-Galda, 1738.

124. Fig. 6(a) (annotated) is reproduced below:

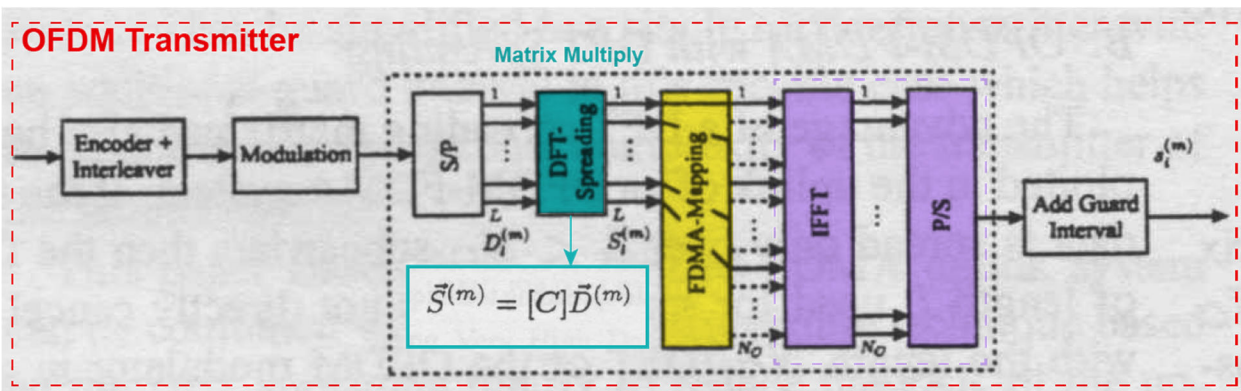

EX1004-Galda, 1740 (Fig. 6(a)).

125. As shown, Galda's matrix $[C]$ is a complex-valued code matrix because Galda uses the "Discrete Fourier Transformation (DFT) matrix" to perform spreading. As Galda notes, "the elements of the discrete Fourier matrix" are provided in the following expression:

$$C_{i,j} = \left(\frac{1}{\sqrt{L}}\right) . e^{j2\pi ij/L}$$

EX1004-Galda, 1739.

126. The above exponential function reflects complex-valued code elements

of Galda's DFT spreading matrix [C]. This would have been clear to a POSITA because the exponential function uses j to refer to $\sqrt{-1}$. *See* EX1001, 54:54-55 (providing alternative notation for complex numbers, i.e., i is $\sqrt{-1}$ – both i and j are typical ways of referring to $\sqrt{-1}$).

127. Galda's column vector $\vec{D}^{(m)}$ has elements $D_l^{(m)}$, l=0, …, L-1 of "complex modulation symbols." This column vector is a matrix of data symbols. EX1004-Galda, 1738. A POSITA would have found it obvious to express $D_l^{(m)}$, l=0, …, L-1 as a matrix of data symbols because a column vector representation of the input signal (i.e., Galda's $\vec{D}^{(m)}$) is a "matrix of data symbols."

128. Indeed, I understand that Patent Owner has admitted the same, as shown below:

By collecting the DFT output samples into a column vector, we have

$$\underbrace{\begin{bmatrix} X(\omega_0) \\ X(\omega_1) \\ X(\omega_2) \\ \vdots \\ X(\omega_{N-1}) \end{bmatrix}}_{\underline{X}} = \underbrace{\begin{bmatrix} \overline{s_0(0)} & \overline{s_0(1)} & \cdots & \overline{s_0(N-1)} \\ \overline{s_1(0)} & \overline{s_1(1)} & \cdots & \overline{s_1(N-1)} \\ \overline{s_2(0)} & \overline{s_2(1)} & \cdots & \overline{s_2(N-1)} \\ \vdots & \vdots & \vdots & \vdots \\ \overline{s_{N-1}(0)} & \overline{s_{N-1}(1)} & \cdots & \overline{s_{N-1}(N-1)} \end{bmatrix}}_{\mathbf{S}_N^*} \underbrace{\begin{bmatrix} x(0) \\ x(1) \\ x(2) \\ \vdots \\ x(N-1) \end{bmatrix}}_{\underline{x}}$$

* * * *

where $\mathbf{S}_N^*$ denotes the *DFT matrix* $\mathbf{S}_N^*[k,n] \triangleq W_N^{-kn} \triangleq e^{-j2\pi kn/N}$ *, i.e.,*

EX1087, 5 (red annotations Patent Owner's).

129. Thus, Galda teaches this limitation.

[1B] "selecting a set of subcarriers assigned for use by a user device; and"

130. Galda teaches this limitation.

131. Galda discloses an OFDM modulation process in which L subcarriers are selected.

132. Specifically, Galda's OFDM modulation process includes selecting the L subcarriers on which to modulate the "L complex transmit symbols $S_l^{(m)}$" (also expressed as $\vec{S}^{(m)}$) to a "selected subcarrier set" that is "exclusively allocated to user m." EX1004-Galda, 1738, 1740 (Fig. 6(a)).

133. Galda's OFDM transmitter selects the L subcarriers from among NC subcarriers that make up the "available" subcarriers assigned to user m. EX1004-Galda, 1738 ("The transmit symbols $S_l^{(m)}$ are then mapped onto L of the available N_C subcarrier which are exclusively allocated to user m.").

134. Galda further teaches that "the set of subcarriers assigned to each user can be composed of any L out of N_C subcarrier that have not been assigned to another user." EX1004-Galda, 1738. This provides flexibility in the management of radio resources, by allowing the transmitter to "spread the user data over the allocated subcarrier only." EX1004-Galda, 1737.

135. Thus, Galda teaches this limitation.

[1C] "modulating the subcarrier values onto the set of subcarriers to produce a plurality of modulated subcarriers; and"

136. Galda teaches this limitation.

137. More specifically, Galda discloses an OFDM modulator (called "OFDM-Transmitter" in Fig. 1). This is shown in Fig. 6(a) below:

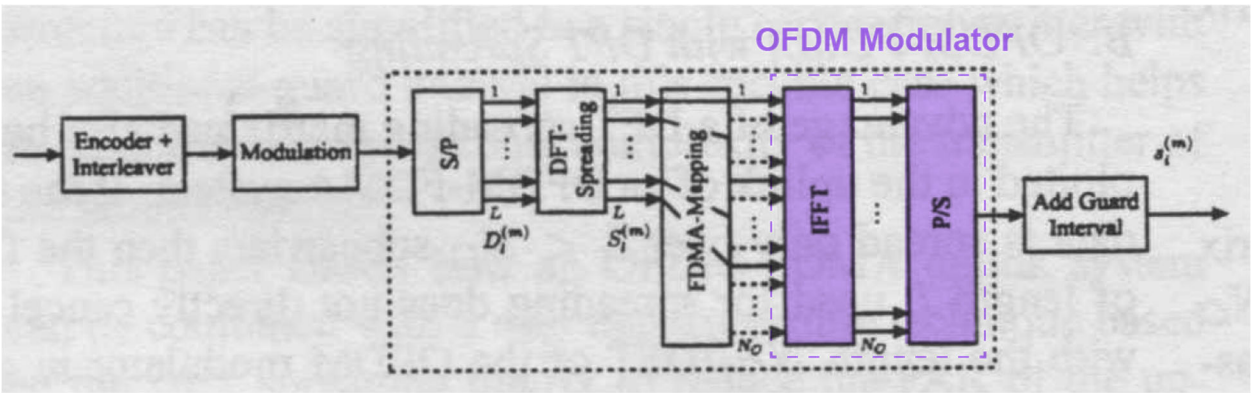

EX1004-Galda, 1740 (Fig. 6(a)).

138. Galda's OFDM modulator uses an IFFT to modulate Galda's subcarrier values ("L complex transmit symbols $S_l^{(m)}$") onto the set of subcarriers (Galda's "L of the available N_C subcarriers"). This, in turn, produces modulated subcarriers in the same manner described in the '005 patent. EX1004-Galda, 1738, 1740; *see* EX1001, 23:58 (referring to "subcarrier modulation (e.g., via IFFT)"), 30:49-51 ("The IFFT modulates the spread data symbols onto the assigned (or selected) OFDM subcarriers to produce a spread-OFDM signal 705.")

139. Thus, Galda teaches this limitation.

[1D] "producing a time-domain waveform from a superposition of the plurality of modulated subcarriers, the time-domain waveform to be transmitted in the wireless network by the user device;"

140. Galda teaches this limitation.

141. More specifically, Galda discloses this limitation by teaching that Galda's modulated subcarriers are summed to create a time-domain waveform from a superposition of modulated subcarriers, i.e., $s_i^{(m)}$. Then, Galda's time-domain waveform $s_i^{(m)}$ is transmitted from a "Mobile Terminal" to a "Base Station" in a wireless network.

142. For example, Galda produces a time domain waveform described by the following expression:

$$s_i^{(m)} = e^{j2\pi im/N_C} \frac{1}{\sqrt{L}} \sum_{l=0}^{L-1} S_l^{(m)} e^{-j2\pi il/L} \qquad (3)$$

$$\text{for} \quad i = -N_G, \dots, 0, \dots, N_C,$$

where the summation of subcarriers from $l = 0\ to\ L$ represents a superposition of the subcarriers modulated by the set of subcarrier values $S_l^{(m)}$ where l ranges from 0 to L-1. EX1004-Galda, 1738-39. Galda calls its time domain waveform the "resulting OFDM time signal of user m." *Id.*

143. Galda also uses a different expression for the OFDM time-domain waveform that uses DFT matrix coefficients and the "complex modulation

symbols:" $s_i^{(m)} = e^{j2\pi im/N_C} \cdot \frac{1}{\sqrt{L}} \cdot \sum_{l=0}^{L-1} \sum_{\nu=0}^{L-1} C_{l,\nu} D_\nu^{(m)} e^{-j2\pi il/L}$. EX1004-Galda, 1739.

144. Galda's disclosure of using an IFFT for OFDM modulation also shows that its resulting signal is a superposition of the plurality of modulated subcarriers. EX1004-Galda, 1737 ("[T]he OFDM transmit signal results from <u>the superposition</u> of a large number of independent data symbols…").

145. A POSITA also would have understood that Galda's time-domain waveform would be produced from a superposition of the plurality of modulated subcarriers, based on Galda's disclosure of an "OFDM time signal," which is a "superposition." EX1004-Galda, 1737-38. Indeed, I understand that Patent Owner has admitted in co-pending litigation that a POSITA "at the time of the invention would understand that an OFDM signal is a superposition of subcarriers" and is "a sum (i.e., a superposition) of the subcarrier frequencies modulated with their corresponding symbols." EX1039, 10. I agree. *See also* EX1047, 8 (Patent Owner admitting that a POSITA "would understand that an OFDM signal is a superposition of subcarriers"); EX1087, 8 (same).

146. Galda also discloses that its time-domain waveform is intended to be transmitted in the wireless network by a user device, as shown in figure 1:

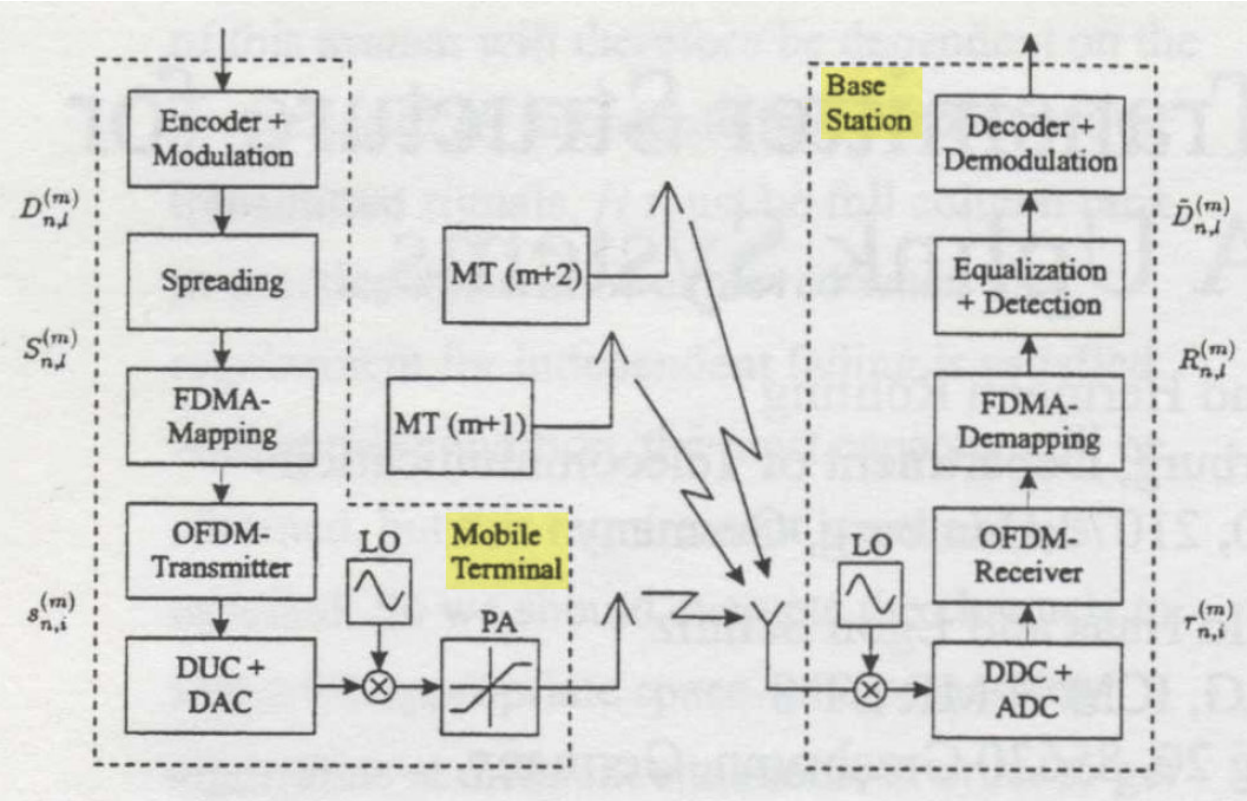

EX1004-Galda, 1738 (Fig. 1). The figure above shows transmissions of the signal after DAC and amplification from "Mobile Terminal" to "Base Station." EX1004-Galda, 1738.

147. Thus, Galda teaches this limitation.

[1E] "wherein producing the set of subcarrier values employs a plurality of complex-valued codes that shapes interference patterns of the superposition to produce a plurality of cyclic-shifted waveforms that each have one of the data symbols modulated thereon."

148. Galda teaches this limitation.

149. More specifically, Galda employs a plurality of complex-valued codes because it uses a "unitary spreading matrix" $[C]$, which has "elements of the discrete

Fourier matrix" that Galda defines as $C_{i,j}=\frac{1}{\sqrt{L}}e^{j2\pi ij/L}$. EX1004-Galda, 1738-1739.

150. Galda's matrix $[C]$ includes "L orthogonal code vectors $\overrightarrow{C_l} = (C_{l,0}, C_{l,1}, \dots, C_{l,l})$ with $l = 0, \dots, L-1$." EX1004-Galda, 1738. Accordingly, "the elements of the discrete Fourier matrix" can be expressed as: $\overrightarrow{C_l} = \frac{1}{\sqrt{L}}\left(e^{j2\pi l0/L}, e^{j2\pi l1/L}, \dots, e^{j2\pi l(L-1)/L}\right)$. EX1004-Galda, 1738-1739. This shows that Galda uses a plurality of complex-valued codes $\overrightarrow{C_l}$.

151. The codes $\overrightarrow{C_l}$ cause a phase rotation to the subcarrier values, which are the encoded data symbols ("L complex transmit symbols $S_l^{(m)}$"), and thus to the resulting waveforms. As one example, if L=4, Galda's DFT spreading matrix takes on the following values:

$$[C] = \begin{bmatrix} C_{0,0} & C_{0,1} & C_{0,2} & C_{0,3} \\ C_{1,0} & C_{1,1} & C_{1,2} & C_{1,3} \\ C_{2,0} & C_{2,1} & C_{2,2} & C_{2,3} \\ C_{3,0} & C_{3,1} & C_{3,2} & C_{3,3} \end{bmatrix} = \begin{bmatrix} \frac{1}{2}e^{j\frac{2\pi(0)(0)}{4}} & \frac{1}{2}e^{j\frac{2\pi(0)(1)}{4}} & \frac{1}{2}e^{j\frac{2\pi(0)(2)}{4}} & \frac{1}{2}e^{j\frac{2\pi(0)(3)}{L}} \\ \frac{1}{2}e^{j\frac{2\pi(1)(0)}{4}} & \frac{1}{2}e^{j\frac{2\pi(1)(1)}{4}} & \frac{1}{2}e^{j\frac{2\pi(1)(2)}{4}} & \frac{1}{2}e^{j\frac{2\pi(1)(3)}{4}} \\ \frac{1}{2}e^{j\frac{2\pi(2)(0)}{L}} & \frac{1}{2}e^{j\frac{2\pi(2)(1)}{4}} & \frac{1}{2}e^{j\frac{2\pi(2)(2)}{4}} & \frac{1}{2}e^{j\frac{2\pi(2)(3)}{4}} \\ \frac{1}{2}e^{j\frac{2\pi(3)(0)}{4}} & \frac{1}{2}e^{j\frac{2\pi(3)(1)}{4}} & \frac{1}{2}e^{j\frac{2\pi(3)(2)}{4}} & \frac{1}{2}e^{j\frac{2\pi(3)(3)}{4}} \end{bmatrix}$$

These codes apply a set of carrier phases to Galda's subcarrier values $S_l^{(m)}$ where l ranges from 0 to L-1. This means that when the symbols are modulated onto the subcarriers, the resulting subcarriers exhibit the same phase shift imparted by the code.

152. When the phase shifted subcarriers undergo the OFDM modulation process associated with Galda's IFFT, the interference patterns of the superposition ($s_i^{(m)}$) are shaped to produce a plurality of cyclic-shifted waveforms that each have one of the data symbols modulated thereon. The passage below describes this in more detail:

> The transmit time signal $s_i^{(m)}$ of user m in an OFDM-FDMA uplink using DFT spreading matrix and an equidistant subcarrier allocation results therefore in a <u>periodic repetition</u> of the complex user data symbol $D_l^{(m)}$ sequence including an added guard interval as cyclic prefix, shown in Fig. 5. This periodic data sequence is multiplied by a user specific complex signal $e^{j2\pi im/N_C}$ due to the user individual frequency shift by m subcarriers of the complete allocated subcarrier set. The number of periods inside a single OFDM symbol is equal to the spacing M of the subcarriers allocated to user m.

EX1004, pp.1739-1740.

153. Galda also includes the following mathematical expressions for equally spaced subcarriers:

$$s_i^{(m)} = e^{j2\pi im/N_C} \cdot \frac{1}{\sqrt{L}} \cdot \sum_{l=0}^{L-1} \sum_{\nu=0}^{L-1} C_{l,\nu} D_\nu^{(m)} e^{-j2\pi il/L}$$

$$= e^{j2\pi im/N_C} \cdot \frac{1}{L}\sum_{\nu=0}^{L-1} D_\nu^{(m)} \underbrace{\sum_{l=0}^{L-1} e^{j2\pi(\nu-i)l/L}}_{= L\delta_L(\nu-i)}$$

$$= e^{j2\pi im/N_C} \cdot \sum_{\nu=0}^{L-1} D_\nu^{(m)} \delta_L(\nu-i)$$

$$s_i^{(m)} = e^{j2\pi im/N_C} \cdot D_{i \bmod L}^{(m)} \qquad (7)$$

EX1004-Galda, 1739.

154. In the expressions above, the plurality of complex-valued codes $\overrightarrow{C_l}$ (represented by their elements "$C_{l,\nu}$" and highlighted blue) shape the interference patterns of the superposition (highlighted yellow) to produce a plurality of cyclic-shifted waveforms (each represented by "the periodic dirac pulse sequence δ_L ()" and highlighted green) that each have one of the data symbols (represented by "$D_\nu^{(m)}$" and highlighted pink) modulated thereon. Galda's equation (7) above includes the following expression:

$$L\,\delta_L(\nu-i) = \sum_{l=0}^{L-1} e^{j2\pi(\nu-i)l/L},$$

where $\delta_L(\nu-i)$ represents L cyclic-shifted waveforms produced from the interference patterns of the superposition $\sum_{l=0}^{L-1} e^{j2\pi(\nu-i)l/L}$ and $\sum_{l=0}^{L-1} e^{j2\pi(\nu-i)l/L}$ is a restructuring of $\sum_{l=0}^{L-1} C_{l,\nu}\, e^{-j2\pi il/L}$ shown in the first line of expression 7 that represents how the plurality of complex-valued codes $\overrightarrow{C_l}$ shape the interference patterns of the superposition of subcarriers to produce the L cyclic-shifted

$$\sum_{l=0}^{L-1} \underbrace{e^{j2\pi l\nu/L}}_{C_{l,\nu} = \overrightarrow{C_l}} \cdot e^{-j2\pi il/L} = \sum_{l=0}^{L-1} e^{j2\pi(\nu-i)l/L} = L\,\delta_L(\nu - i).$$

EX1004, p.1739.

155. $\delta_L(\nu - i)$ represents L cyclic-shifted waveforms defined as:

$$\delta_L(\nu - i) = \begin{cases} 1, & for\ \nu\ mod\ L = i\ mod\ L \\ 0, & otherwise \end{cases}$$

where ν identifies each of the L cyclic-shifted waveforms as having a unique shift ν, where $\nu = 0, \ldots, L-1$, i indexes the waveform samples, and L defines each cyclic-shifted waveform's cyclic nature. For example, $\delta_L(0 - i)$ represents cyclic-shifted waveform that is equal to 1 whenever $i\ mod\ L = 0$, and $\delta_L(1 - i)$ represents different cyclic-shifted waveform that is equal to 1 whenever $i\ mod\ L = 1$.

156. When $N_C = 8$, $M = 4$, and $L = 2$, as in the example illustrated in Fig. 5 of Galda, $\delta_L(\nu - i)$ becomes $\delta_2(\nu - i)$ and $s_i^{(m)}$ may be expressed as

$$s_i^{(m)} = e^{j2\pi im/8} \cdot \sum_{\nu=0}^{2-1} D_\nu^{(m)}\,\delta_2(\nu - i)$$

$$= e^{j2\pi im/8}\left(D_0^{(m)}\delta_2(0 - i) + D_1^{(m)}\delta_2(1 - i)\right).$$

In this expression, $\delta_2(0 - i)$ represents cyclic-shifted waveform that has the data

symbols $D_0^{(m)}$modulated thereon, and $\delta_2(1-i)$ represents a different cyclic-shifted waveform that has the data symbols $D_1^{(m)}$modulated thereon. EX1004, p.1739. In this example, $\delta_2(0-i)$ is a cyclic-shifted waveform that is equal to 1 whenever $i\ mod\ 2\ =\ 0$ (i.e., when $i\ =\ -2, 0, 2, 4, or\ 6$), and $\delta_2(1-i)$ is a cyclic-shifted waveform that is equal to 1 when $i\ mod\ 2\ =\ 1$ (i.e., when $i\ =\ -1, 1, 3, 5, or\ 7$) as shown visually below:

$\boldsymbol{i}$	-2	-1	0	1	2	3	4	5	6	7
$\boldsymbol{\delta_2(0-i)}$	1	0	1	0	1	0	1	0	1	0
$\boldsymbol{\delta_2(1-i)}$	0	1	0	1	0	1	0	1	0	1

157. Thus, $D_0^{(m)}\delta_2(0-i)$ and $D_1^{(m)}\delta_2(1-i)$ may be visualized as:

$\boldsymbol{D_0^{(m)}\delta_2(0-i)}$	$D_0^{(m)}$		$D_0^{(m)}$		$D_0^{(m)}$		$D_0^{(m)}$		$D_0^{(m)}$	
$\boldsymbol{D_1^{(m)}\delta_2(1-i)}$		$D_1^{(m)}$		$D_1^{(m)}$		$D_1^{(m)}$		$D_1^{(m)}$		$D_1^{(m)}$

This corresponds to Galda's Fig 5. In other words, the expression $s_i^{(m)} = e^{j2\pi im/8}\left(D_0^{(m)}\delta_2(0-i) + D_1^{(m)}\delta_2(1-i)\right)$ may be visualized in a simplified form, like the example shown in Fig. 5 of Galda, as the modified figure below shows:

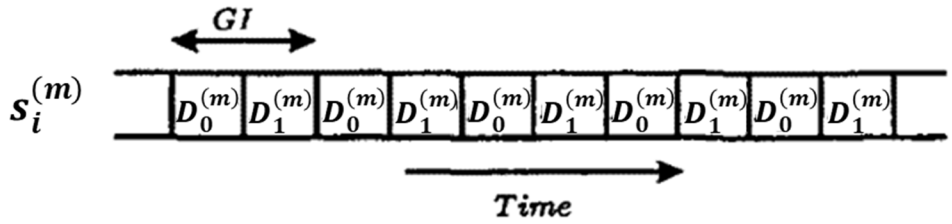

A POSITA would have understood that Galda's Fig. 5 simplifies expression 7, and in doing so Galda omits the term "$e^{j2\pi im/8}$" to illustrate the periodic repetition of the complex user data symbol $D_l^{(m)}$ sequence. The indices differ for a non-substantive reason, namely that the complex user data symbol $D_l^{(m)}$ sequence used in Galda's Fig. 5 is one-based indexing (i.e., ranges from 1 to *L*), rather than the zero-based indexing (i.e., ranges from 0 to *L-1*) as used in expression 7 and the examples provided above. This is a simple difference in nomenclature that does not impact the math or teachings in Galda.

158. Thus, Galda teaches and renders obvious claim 1.

2. Dependent Claims

[Claim 6] "The method of claim 1, wherein modulating and producing the time-domain waveform is performed using an inverse discrete Fourier transform."

159. Galda teaches this limitation.

160. More specifically, Galda's IFFT modulates subcarrier values to produce the time-domain waveform $s_i^{(m)}$:

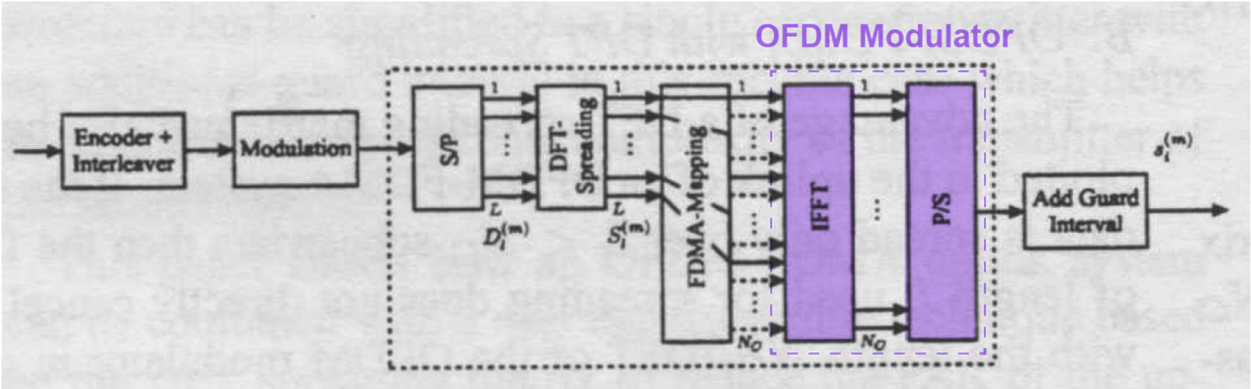

EX1004-Galda, 1740 (Fig. 6(a)).

161. A POSITA would have understood that an IFFT is a type of inverse discrete Fourier transform (IDFT), which was both well known and conceded by the '005 patent itself. EX1001, 34:42-43 ("[A]n IDFT can be implemented as an IFFT"); *see also* EX1015-Prasad, 36.

162. Thus, Galda teaches and renders obvious claim 6.

[Claim 9] "The method of claim 1, wherein selecting the set of subcarriers provides for orthogonal frequency division multiple access for the user device and at least one other user device."

163. Galda teaches this limitation.

164. More particularly, Galda's system comprises N_C subcarriers, L subcarriers of which are allocated to a particular user. EX1004-Galda, 1038 ("In principle, the set of subcarrier assigned to each user can be composed of any L out of N_C subcarrier that have not been assigned to another user.") Galda provides an example which shows different subcarriers assigned to User 1 as compared to User m:

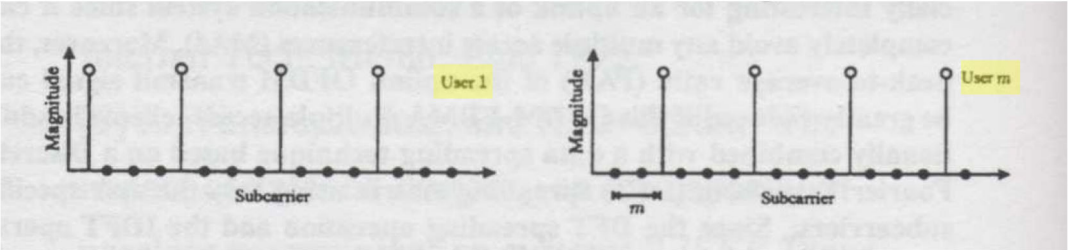

EX1004-Galda, 1738.

165. The figure above depicts orthogonal frequency division multiple access for the users. This is part of the purpose of Galda's "OFDM-FDMA" scheme, which stands for "orthogonal frequency division-frequency division multiple access." EX1004-Galda, 1737 (referring to scheme as a "OFDM-FDMA multiple access scheme").

166. Thus, Galda teaches and renders obvious claim 9.

[Claim 10] "The method of claim 1, wherein an mth one of the plurality of complex-valued codes is expressed as a set of N code chips, wherein each code chip is expressed by $e^{i2\pi nm/N}$, where e is Euler's number, i is the square root of −1, π is Pi, and n is an integer."

167. Galda teaches this limitation.

168. As I explain above regarding limitations 1A and 1E, Galda teaches complex-valued codes: $C_{i,j}=\frac{1}{\sqrt{L}}e^{j\pi ij/L}$. EX1004-Galda, 1739.

169. The index *j* (at the end of Galda's expression) is the same as the claim's "m^{th}" one of the plurality of complex-valued codes because Galda describes "*L* orthogonal code vectors $\overrightarrow{C_l} = \left(C_{l,0}, C_{l,1}, \dots, C_{l,l}\right)$ with $l = 0, \dots, L-1$." A POSITA would have recognized the simple distinction, namely that the '005 patent's claim

uses indices *l* and *v* from equation (2), while Galda uses indices *i* and *j* from equation (6). EX1004-Galda, 1738-39.

170. Galda's complex-valued codes are expressed as a set of N code chips, where Galda uses *L* instead of *N* as shown in the denominator of the exponential term. Each such code chip is expressed by $e^{i2\pi nm/N}$ –namely Galda's expression $C_{i,j}=\frac{1}{\sqrt{L}}e^{j\pi ij/L}$ where *e* is Euler's number, *j* (which is also denoted as *i*) is $\sqrt{-1}$, π is Pi and n (*i* in Galda) is an integer from 0 to *L*-1. EX1004-Galda, 1738-39.

171. Thus, Galda teaches and renders obvious claim 7.

IX. GROUND 3: Claims 13, 18, 21, 22, 25, 30, 33, and 34 are obvious over Galda in view of Dowling

A. Reasons for Combining Prior Art

172. Ground 3 relies on Galda in view of Dowling and addresses claims 13, 18, 21, 22, 25, 30, 33, and 34. These claims require a processor, memory, instructions stored in memory that are executed in a processor, computer-readable program code executed by a processor, and the like. Otherwise, these claims correspond to claims 1, 6, 9, and 10, as seen in the patent and in my analysis herein.

173. Galda does not explicitly state whether its OFDM transmitter is implemented in hardware or a combination of hardware and software. Nevertheless, a POSITA would have understood that Galda would have needed to be implemented using at least one of these technologies. A POSITA would have found it obvious to

implement Galda in software stored in memory coupled to a processor such that the software is executed by the processor.

174. More specifically, a POSITA would have understood that transmitters could be implemented in hardware or software. The Dowling reference (EX1042-Dowling) provides one example by disclosing that its OFDM transmitter including its modulation techniques "may be implemented as software modules which execute on a programmable processor architecture." EX1042-Dowling, 3:46-50; *see id.* at 5:66-6:1 (disclosing that the transmitter, receiver, and precoder may be implemented in hardware or software"); 21:62-64 (disclosing that the "present invention" is applicable to FFT based multicarrier modulation and OFDM systems).

175. In a software implementation, software is stored in memory, and is provided from memory to a processor for execution as was well known to a POSITA. Indeed, those skilled in the art were aware of "software radios" that used code in memory and processors to execute that code to provide flexibility in design and updating, as opposed to hardware which was significantly more difficult to upgrade because it is fixed in silicon. EX1008-Chen (describing OFDM-CDMA software radio); EX1011-Walton, 0124-25 (explaining that modulation "and other techniques" can be implemented in "hardware, software, or a combination thereof" and that "[t]he software codes may be stored in a memory unit…and executed by a processor").

176. A POSITA would have been motivated and found it obvious to implement Galda's spreading, mapping, modulation, and cyclic prefix appending functions (among others) in a software radio (including code in memory and a processor coupled to memory to execute the code) rather than in specialized hardware. In particular, the use of software and corresponding memory would have resulted in a more flexible system that could be modified and redesigned more easily.

177. Moreover, implementing Galda's OFDM transmitter using software and corresponding memory merely represented a simple substitution of one known element (a software-based transmitter) for another (hardware implementation of same) to obtain predictable results (the same functionality performed in software rather than hardware). Likewise, implementing Galda using software and memory merely required a predictable use of prior art elements (software-based transmitter components) according to their established functions (i.e., performing the same functions taught by Galda), and merely required applying a known technique (software implementation) to a known device (Galda's transmitter) ready for improvement (e.g., in the form of increased flexibility) to yield predictable results (a transmitter performing Galda's operations in software).

178. A POSITA also would have expected to succeed in making this combination. As I explain above, Galda discloses am OFDM transmitter and defines the various mathematical operations for each of the components. Implementing these

mathematical operations in software would have required only routine knowledge because software is especially well-suited for performing mathematical operations. Because ordinary artisans working in the field were aware that various transmitter functions may be implemented in either hardware or software (both well-known alternatives) a POSITA would have reasonably expected in achieving a software implementation using instructions stored on a memory for execution by a processor.

B. Challenged Claims

1. Independent Claims 13 and 25

[13Pre] "An apparatus for communication in a wireless network, comprising:
[13A] "at least one processor; and"
[13B] "at least one non-transitory computer-readable memory in electronic communication with the at least one processor, wherein instructions stored in the at least one non-transitory computer-readable memory are executable by the at least one processor for:"
[25Pre] "A computer program product, comprising at least one non-transitory computer-readable memory having computer-readable program code stored thereon, the computer-readable program code containing instructions executable by one or more processors for:"

179. Galda in view of Dowling teaches these preambles and limitations.

180. First, Galda discloses 13Pre for the reasons provided above regarding 1Pre.

181. Galda in view of Dowling further discloses the elements set forth in 13A, 13B, and 25Pre. More particularly, Dowling teaches that many elements of an OFDM transmitter including its modulation techniques "may be implemented as software modules which execute on a programmable processor architecture."

EX1042-Dowling, 3:46-50; *see id.* at 5:66-6:1 (disclosing that various elements may be implemented in hardware or software), 21:62-64 (disclosing that Dowling's software radio teachings apply to elements including FFT-based multicarrier modulation and OFDM systems).

182. In a software implementation, software is stored in memory, and is provided from memory to a processor for execution. A POSITA would have known that "software radios" were implemented by a processor executing code stored in memory, and that doing so provided desirable flexibility in design and the ability to update features of the radio as compared to hardware-only implementations that were more difficult to upgrade because they are fixed in silicon. EX1008-Chen (describing OFDM-CDMA software radio); EX1011-Walton, 0124-25 (explaining that modulation "and other techniques" can be implemented in "hardware, software, or a combination thereof" and that "[t]he software codes may be stored in a memory unit…and executed by a processor"). As I explain above, a POSITA would have found it obvious to implement Galda in software stored on memory for execution by a processor coupled to the memory as recited in claims 13 and 25.

183. Thus, Galda in view of Dowling teaches these preambles and limitations.

[13Ci] "producing a set of subcarrier values that equals a product of a complex-valued code matrix with a matrix of data symbols;"
[25A] "producing a set of subcarrier values that equals a product of a complex-valued code matrix with a matrix of data symbols;"

184. Galda teaches these limitations for the reasons provided above regarding limitation 1A.

[13Cii] "selecting a set of subcarriers assigned for use by a user device; and"
[25B] "selecting a set of subcarriers assigned for use by a user device; and"

185. Galda teaches these limitations for the reasons provided above regarding limitation 1B.

[13Ciii] "modulating the subcarrier values onto the set of subcarriers to produce a plurality of modulated subcarriers; and"
[25C] "modulating the subcarrier values onto the set of subcarriers to produce a plurality of modulated subcarriers; and"

186. Galda teaches these limitations for the reasons provided above regarding limitation 1C.

[13Civ] "producing a time-domain waveform from a superposition of the plurality of modulated subcarriers, the time-domain waveform to be transmitted in the wireless network by the user device;"
[25D] "producing a time-domain waveform from a superposition of the plurality of modulated subcarriers, the time-domain waveform to be transmitted in the wireless network by the user device;"

187. Galda teaches these limitations for the reasons provided above regarding limitation 1D.

[13Cv] "wherein producing the set of subcarrier values employs a plurality of complex-valued codes that shapes interference patterns of the superposition to produce a plurality of cyclic-shifted waveforms that each have one of the data symbols modulated thereon."
[25E] "wherein producing the set of subcarrier values employs a plurality of complex-valued codes that shapes interference patterns of the superposition to produce a plurality of cyclic-shifted waveforms that each have one of the data symbols modulated thereon."

188. Galda teaches these limitations for the reasons provided above regarding limitation 1E.

189. Thus, Galda in view of Dowling renders obvious claims 13 and 25.

2. Dependent Claims

[Claim 18] "The apparatus of claim 13, wherein modulating and producing the time-domain waveform is performed using an inverse discrete Fourier transform."
[Claim 30] "The computer program product of claim 24, wherein modulating and producing the time-domain waveform is performed using an inverse discrete Fourier transform."

190. Galda teaches these limitations for the reasons provided above regarding claim 6.

191. Thus, Galda in view of Dowling renders obvious claims 18 and 30.

[Claim 21] "The apparatus of claim 13, wherein selecting the set of subcarriers provides for orthogonal frequency division multiple access for the user device and at least one other user device."
[Claim 33] "The computer program product of claim 25, wherein selecting the set of subcarriers provides for orthogonal frequency division multiple access for the user device and at least one other user device."

192. Galda teaches these limitations for the reasons provided above regarding claim 9.

193. Thus, Galda in view of Dowling renders obvious claims 21 and 33.

[Claim 22] "The apparatus of claim 13, wherein an mth one of the plurality of complex-valued codes is expressed as a set of N code chips, wherein each code chip is expressed by $e^{i2\pi nm/N}$, where e is Euler's number, i is the square root of −1, π is Pi, and n is an integer."
[Claim 34] "The computer program product of claim 25, wherein an mth one of the plurality of complex-valued codes is expressed as a set of N code chips, wherein each code chip is expressed by $e^{i2\pi nm/N}$, where e is Euler's number, i is the square root of −1, π is Pi, and n is an integer."

194. Galda teaches these limitations for the reasons provided above regarding claim 10.

195. Thus, Galda in view of Dowling renders obvious claims 22 and 34.

X. Grounds 4 and 5: Claim 7 is obvious over Galda in view of Doufexi, while Claims 19 and 31 are obvious over Galda in view of Dowling and Doufexi

A. Reasons for Combining Prior Art

196. Galda discloses that FDMA multiple access schemes offer "not only a high flexibility for radio resource management (RRM) but can also increase the bandwidth efficiency of the complete system by avoiding the use of highly attenuated subcarriers for specific users based on the knowledge of the channel transfer function." EX1004-Galda, 1737. However, Galda does not explain what its subcarrier spacing is or state whether it is fixed or variable.

197. A POSITA nonetheless would have understood that variable subcarrier spacings provided benefits in OFDM systems. Here, I note that these benefits relate to overall system flexibility and performance, and thus apply whether the transmitter

is implemented in hardware, software, or a combination of both. Thus, I address Grounds 4-5 together here—Ground 4 does not involve the software radio I discuss above in the context of Ground 3 relative to Dowling, while Ground 5 is a further modification to Ground 3's combination of Galda in view of Dowling.

198. For example, Doufexi discloses that variable subcarrier spacing provides particular benefits in OFDM systems. For example, Doufexi discloses that subchannel spacing was a key design consideration for a 4G OFDM system. EX1003-Doufexi, 192. Likewise, Doufexi expressly teaches a POSITA to use selectable link parameters: "Since 4G systems will be deployed in a wide range of environments, a fixed set of parameters is not capable of achieving high performance in all cases." EX1003-Doufexi, 192; *see id.*, 192 ("A system capable of dynamically adapting one or more of the above parameters may offer superior performance.")

199. Doufexi also discloses different "parameters and transmission modes" shown in the following table:

Table 2. OFDM Parameters for 4G.

Parameter	Value 1	*Value 2*
Operating Frequency	2GHz	*2GHz*
Bandwidth *(B)*	4096 kHz	*4096 kHz*
Useful Symbol Duration *(T)*	62.5 µs	*125 µs*
Guard Interval Duration *(T_g)*	15.625 µs *(T/4)*	*31.25µs (T/4)*
Total Symbol Duration *(T_{symbol})*	78.125 µs (with GI =*T/4*)	*156.25 µs (with GI =T/4)*
Inner Channel Coding	Punctured 1/2 rate convolution code, Constraint length 7, $\{133, 171\}_{octal}$	*Punctured 1/2 rate convolution code, Constraint length 7, $\{133, 171\}_{octal}$*
FFT Size	256	*512*
Number of data sub-carriers *(N_D)*	216	*432*
Sub-carrier spacing *(Δ_f)*	16 kHz	*8 kHz*

EX1003-Doufexi, 193.

200. As shown above, Doufexi discloses that subcarrier spacing is a variable parameter "(Δ_f)." *Id.* Doufexi thereby teaches a POSITA to employ variable subcarrier spacing, which can be selected from among a plurality of subcarrier spacings. This variable capability achieves "high performance" in "a wide range of environments" and "superior performance." EX1003-Doufexi, 192-193. Thus, a POSITA would have been motivated to permit variable subcarrier spacing in Galda (and Galda in view of Dowling) based on Doufexi, including because Doufexi provides an express reason to do so (namely, higher performance in a wide range of environments).

201. A POSITA also would have found it obvious to select from a plurality of subcarrier spacings when selecting a user *m*'s subcarriers in Galda (and Galda in view of Dowling). Doing so was just one of two possible choices: use fixed or variable subcarrier spacings. Since there were known benefits to using variable, selectable subcarrier spacings, it was obvious for a POSITA to do so.

202. Likewise, using the selectable subcarrier spacings and permitting Galda (and Galda in view of Dowling) to select them as part of selecting the set of subcarriers for a particular user (*m*) merely required using a known technique (selectable subcarrier spacing) in a predictable manner in order to adapt to different environments and increase system flexibility. The resulting combination was predictable because it merely required adjusting various system parameters to permit

changes in subcarrier spacing and symbol duration in view of channel conditions.

203. A POSITA would have reasonably expected to succeed in making the combination because a POSITA was aware of the benefits of selecting different subcarrier spacings depending on channel conditions, deployment scenarios, and/or environmental conditions. A POSITA was also aware of the mathematical relationships between OFDM symbol duration and subcarrier spacing that are needed to maintain orthogonality. EX1015-Prasad, 22 ("[T]he carriers are linearly independent (i.e., orthogonal) if the carrier spacing is a multiple of 1/T."). Such parameters were also textbook considerations for OFDM system design. EX1015-Prasad, 33 ("In OFDM systems design, a number of parameters are up for consideration, such as the number of subcarriers, guard time, symbol duration, subcarrier spacing.")

B. Claim 7 (Ground 4)

[Claim 7] "The method of claim 1, wherein selecting the set of subcarriers comprises selecting one of a plurality of selectable subcarrier spacings."

204. Galda in view of Doufexi teaches this limitation.

205. More particularly, it was obvious when selecting the set of subcarriers as part of Galda's process of mapping "L complex transmit symbols $S_l^{(m)}$" to subcarriers to select one of a plurality of selectable subcarrier spacings, as taught in Doufexi.

206. For example, Doufexi describes two OFDM transmission modes with different parameter values including two different subcarrier spacings (Δ_f) of 16 kHz and 8kHz, as the table below shows:

Table 2. OFDM Parameters for 4G.

Parameter	Value 1	*Value 2*
Operating Frequency	2GHz	*2GHz*
Bandwidth *(B)*	4096 kHz	*4096 kHz*
Useful Symbol Duration *(T)*	62.5 µs	*125 µs*
Guard Interval Duration (T_g)	15.625 µs (*T/4*)	*31.25µs (T/4)*
Total Symbol Duration (T_{symbol})	78.125 µs (with GI =*T/4*)	*156.25 µs (with GI =T/4)*
Inner Channel Coding	Punctured 1/2 rate convolution code, Constraint length 7, $\{133, 171\}_{octal}$	*Punctured 1/2 rate convolution code, Constraint length 7, $\{133, 171\}_{octal}$*
FFT Size	256	*512*
Number of data sub-carriers (N_D)	216	*432*
Sub-carrier spacing (Δ_f)	16 kHz	*8 kHz*

EX1003-Doufexi, 193.

207. Thus, Galda in view of Doufexi teaches and renders obvious claim 7.

C. Claims 19 and 31 (Ground 5)

[Claim 19] "The apparatus of claim 13, wherein selecting the set of subcarriers comprises selecting one of a plurality of selectable subcarrier spacings."
[Claim 31] "The computer program product of claim 25, wherein selecting the set of subcarriers comprises selecting one of a plurality of selectable subcarrier spacings."

208. Galda in view of Dowling and Doufexi teaches these limitations for the reasons described above regarding Ground 4, claim 7.

209. Thus, Galda in view of Dowling and Doufexi renders obvious claims 19 and 31.

XI. Grounds 6 and 7: Claim 7 is obvious over Galda in view of Lucent, while Claims 19 and 31 are obvious over Galda in view of Dowling and Lucent

A. Reasons for Combining Prior Art

210. As I explain above regarding Doufexi, Galda discloses that FDMA multiple access schemes offer "not only a high flexibility for radio resource management (RRM) but can also increase the bandwidth efficiency of the complete system by avoiding the use of highly attenuated subcarriers for specific users based on the knowledge of the channel transfer function." EX1004-Galda, 1737. However, Galda does not explain what its subcarrier spacing is or state whether that subcarrier spacing is fixed or variable.

211. And, as I also explained above, a POSITA would have understood that variable subcarrier spacings provided benefits in OFDM systems (whether or not such systems are implemented in hardware, software, or both, as previously explained). Where I discussed Doufexi above regarding Grounds 4-5, here I discuss further modifying Galda or Galda in view of Dowling in view of Lucent.

212. More specifically, Lucent was a submission to 3GPP that proposes a baseline OFDM system. EX1006-Lucent, 1. Lucent provides "three reference configurations" for the proposed "baseline OFDM system," shown in the table below. EX1006-Lucent, 5.

System Parameters	Configuration 1	Configuration 2	Configuration 3
Suitable deployment environment	Indoor, Pedestrian A	Vehicular A	Pedestrian B
Symbol per 0.67 msec time slot	12	6	3
Number of FFT points	256	512	1024
Number of sub-carriers	256	512	1024
OFDM Symbol period (usec)	55.6	111	222
Sub-carrier spacing (kHz)	19.2	9.6	4.8
Guard band on each side of the 5MHz band (kHz)	42.4	42.4	42.4
Sampling period (usec)	0.20345025	0.20345025	0.20345025
Guard time $T_g=T_{prefix}+T_{postfix}$ (samples/usec)	17/3.46	34/6.92	68/13.8
Cyclic prefix length (samples/usec)	5/1.017252604	16/3.255204	50/10.17252604
Power amplifier ramp-up and ramp-down period (samples)	6 samples each	9 samples each	9 samples each

EX1006-Lucent, 5.

213. Lucent's configurations correspond to different "suitable deployment environment[s]." EX1006-Lucent, 5; *id.*, 7 ("We have suggested an OFDM system with multiple configurations that can be deployed in different environments."). A difference between the three configurations proposed by Lucent is the subcarrier spacing, which are disclosed as being one of 19.2 kHz, 9.6 kHZ, and 4.8 kHz. EX1006-Lucent, 5. Lucent thereby reflects the same idea as Doufexi: different use cases or environments suggest using different subcarrier spacings (among other transmission parameter options).

214. A POSITA would have known that a user may use a mobile station

(e.g., a UE) in different scenarios, including while moving in a car moving at 100 km/h (configuration 2), while walking outside across a parking lot (configuration 3), and after entering a building (configuration 1). Each configuration may yield better performance in view of the user's movement and related environment. Thus, a POSITA would have been motivated to allow Galda (and Galda in view of Dowling) to select one of a plurality of selectable subcarrier spacings based on Lucent.

215. Based on the foregoing a POSITA would have found it obvious to select one of various subcarrier spacing options for the user, based on Lucent's express motivation and teachings. A POSITA would have seen benefits in facilitating variable subcarrier spacings to enable different configurations for different UE environments as taught by Lucent.

216. Additionally, a POSITA would have found it obvious to select from a plurality of subcarrier spacings when selecting a user *m*'s subcarriers in Galda (and Galda in view of Dowling) because doing so was one of two possible choices (fixed spacing or variable spacing). Since there were known benefits associated with variable subcarrier spacings, it was obvious for a POSITA to implement variable subcarrier spacing in order to take advantage of those benefits.

217. Using the selectable subcarrier spacings in the context of selecting the set of subcarriers for a particular user merely required using a known technique, taught in Lucent, to improve Galda (and Galda in view of Dowling) by increasing

system flexibility. The results of such a combination were predictable, as I explain above regarding Doufexi.

218. A POSITA also would have reasonably expected to succeed in making the combination because POSITAs were aware of the benefits of selecting different subcarrier spacings depending on channel conditions, deployment scenarios, and/or environmental conditions. A POSITA was also aware of the mathematical relationships between OFDM symbol duration and subcarrier spacing that are needed to maintain orthogonality, as previously explained in view of textbook knowledge. EX1015-Prasad, 22 & 33.

B. Claim 7 (Ground 6)

[Claim 7] "The method of claim 1, wherein selecting the set of subcarriers comprises selecting one of a plurality of selectable subcarrier spacings."

219. Galda in view of Lucent teaches this limitation.

220. More specifically, Lucent describes three OFDM system configurations that use three different subcarrier spacings—i.e., 19.2 kHz, 9.6 kHz, and 4.8 kHz. EX1006-Lucent, 5. Thus, Lucent teaches a plurality of selectable subcarrier spacings, as shown below:

System Parameters	Configuration 1	Configuration 2	Configuration 3
Suitable deployment environment	Indoor, Pedestrian A	Vehicular A	Pedestrian B
Symbol per 0.67 msec time slot	12	6	3
Number of FFT points	256	512	1024
Number of sub-carriers	256	512	1024
OFDM Symbol period (usec)	55.6	111	222
Sub-carrier spacing (kHz)	19.2	9.6	4.8
Guard band on each side of the 5MHz band (kHz)	42.4	42.4	42.4
Sampling period (usec)	0.20345025	0.20345025	0.20345025
Guard time $T_g=T_{prefix}+T_{postfix}$ (samples/usec)	17/3.46	34/6.92	68/13.8
Cyclic prefix length (samples/usec)	5/1.017252604	16/3.255204	50/10.17252604
Power amplifier ramp-up and ramp-down period (samples)	6 samples each	9 samples each	9 samples each

EX1006-Lucent, 5.

221. Thus, Galda in view of Lucent teaches and renders obvious claim 7.

C. Claims 19, 31 (Ground 7)

[Claim 19] "The apparatus of claim 13, wherein selecting the set of subcarriers comprises selecting one of a plurality of selectable subcarrier spacings."
[Claim 31] "The computer program product of claim 25, wherein selecting the set of subcarriers comprises selecting one of a plurality of selectable subcarrier spacings."

222. Galda in view of Dowling and Lucent teaches these limitations for the reasons described above regarding Ground 6, claim 7.

223. Thus, Galda in view of Dowling and Lucent renders obvious claims 19 and 31.

XII. Grounds 8 and 9: Claim 7 is obvious over Galda in view of Ma, while Claims 19 and 31 are obvious over Galda in view of Dowling and Ma

A. Reasons for Combining Prior Art

224. As I explain above regarding Doufexi and Lucent, Galda discloses that FDMA multiple access schemes offer "not only a high flexibility for radio resource management (RRM) but can also increase the bandwidth efficiency of the complete system by avoiding the use of highly attenuated subcarriers for specific users based on the knowledge of the channel transfer function." EX1004-Galda, 1737. However, Galda does not explain what its subcarrier spacing is or state whether it is fixed or variable.

225. And, as I also explained above, a POSITA would have understood that variable subcarrier spacings provided benefits in OFDM systems (whether or not such systems are implemented in hardware, software, or both, as previously expalined). Where I discussed Doufexi and Lucent above regarding Grounds 4-7, here I discuss further modifying Galda or Galda in view of Dowling in view of Ma.

226. More specifically, Ma discloses implementing variable subcarrier spacings and symbol durations in OFDM systems. EX1033-Ma, 0002. Ma partitions frequency and time planes into "multiple access block" ("MAB") regions where each MAB has a different subcarrier spacing and symbol duration. EX1033-Ma, 0004, 0028, 0030-0031, Fig. 5.

227. Ma's flexible subcarrier spacings and symbol durations mitigated "problems associated with fixed subcarrier spacing and fixed symbol duration." EX1033, 0028. Ma also discloses allowing parameters to be "selected to meet performance and efficiency demands" thus providing "higher spectral efficiency, greater flexibility, and shorter latencies than is otherwise provided by static sub-carrier spacing and symbol duration allocation of conventional OFDM schemes." EX1033-Ma, 0036. Thus, Ma provides explicit motivation for a POSITA to employ flexible subcarrier spacings in Galda's systems and methods.

228. Accordingly, Ma provides express motivation for a POSITA to select one of a plurality of subcarrier spacings when selecting the subcarriers in Galda (and Galda in view of Dowling). A POSITA would have recognized the benefit of providing for "higher spectral efficiency, greater flexibility, and shorter latencies," as taught by Ma.

229. Additionally, a POSITA would have found it obvious to select from a plurality of subcarrier spacings when selecting a user *m*'s subcarriers in Galda (and Galda in view of Dowling) because a POSITA had two options, employing fixed subcarrier spacing or employing variable subcarrier spacing, and there were known benefits associated with the latter.

230. Using the selectable subcarrier spacings and permitting Galda (and Galda in view of Dowling) to select them as part of selecting the set of subcarriers

for a particular user (*m*) also merely used a known technique (variable subcarrier spacing) as taught in Ma to improve Galda (and Galda in view of Dowling) to allow it for adaptability and increased system flexibility. The resulting combination was predictable because it merely required adjusting system parameters in known ways, as taught in Ma. As I explain above, a POSITA was also aware of the mathematical relationships between OFDM symbol duration and subcarrier spacing that are needed to maintain orthogonality, and it was typical to consider such parameters as part of OFDM system design. EX1015-Prasad, 22, 33.

B. Claim 7 (Ground 8)

[Claim 7] "The method of claim 1, wherein selecting the set of subcarriers comprises selecting one of a plurality of selectable subcarrier spacings."

231. Galda in view of Ma teaches this limitation.

232. More particularly, Ma describes "methods for supporting variable sub-carrier spacing and symbol duration for transmitting OFDM symbols and associated cyclic prefixes." EX1033-Ma, 0024; *see id.*, 0031 ("The flexible sub-carrier spacing and symbol duration allocation (e.g., corresponding to various MAB [multiple access block] types) may be defined by various OFDM parameters (or frequency primitives), such as subcarrier-spacing, useful symbol length, cyclic prefix length, or combinations thereof.") Ma also describes subcarrier spacings of Δf, 2Δf, and 4Δf, where Δf is 15kHz. *Id.* Accordingly, Ma discloses a plurality of selectable subcarrier

spacings (e.g., 15 KHz, 30 kHz, and 60 kHz).

233. Thus, Galda in view of Ma teaches and renders obvious claim 7.

C. Claims 19, 31 (Ground 9)

[Claim 19] "The apparatus of claim 13, wherein selecting the set of subcarriers comprises selecting one of a plurality of selectable subcarrier spacings."
[Claim 31] "The computer program product of claim 25, wherein selecting the set of subcarriers comprises selecting one of a plurality of selectable subcarrier spacings."

234. Galda in view of Dowling and Ma teaches these limitations for the reasons described above regarding Ground 8, claim 7.

235. Thus, Galda in view of Dowling and Ma renders obvious claims 19 and 31.

XIII. Grounds 10 and 11: Claim 11 is obvious over Galda in view of Bury, while claims 23 and 35 are obvious over Galda in view of Dowling and Bury

A. Claim 11 (Ground 10)

[Claim 11] "The method of claim 1, wherein producing the set of subcarrier values employs a fast transform."

236. Galda in view of Bury teaches this limitation.

237. Galda discloses a DFT for DFT spreading, as I discuss above regarding Ground 1, limitation 1A.

238. Galda does not explicitly state that its DFT is a FFT or that it employs a fast transform. Bury discloses "a DFT for spreading, which can be implemented efficiently as a fast Fourier transform (FFT)," and thus discloses employing a fast

transform. EX1007-Bury, 857.

239. FFTs have been described as "the most ubiquitous algorithm in use today to analyze and manipulate digital or discrete data." EX1052, 23. A POSITA would have been motivated to use a FFT (a *fast transform*) to perform Galda's DFT spreading because an FFT was an efficient way to implement a DFT and was a "ubiquitous algorithm." EX1007-Bury, 857; EX1052, 23.

240. Considering its ubiquity, a POSITA would also have reasonably expected to succeed because the FFT was "an algorithm 'the whole family can use.'" EX1052, 23. Indeed, as is relevant to Ground 11, claims 23 and 35 below, a POSITA would have expected to use an FFT to implement a DFT-spreading operation in the context of Galda (and Galda in view of Dowling) whether the DFT-spreading was implemented in hardware, software, or both. A POSITA would have had that expectation given the ubiquity of the FFT and its well-known computational efficiency.

241. Thus, Galda in view of Bury teaches and renders obvious claim 11.

B. Claims 23, 35 (Ground 11)

[Claim 23] "The apparatus of claim 13, wherein producing the set of subcarrier values employs a fast transform."
[Claim 35] "The computer program product of claim 24, wherein producing the set of subcarrier values employs a fast transform."

242. Galda in view of Bury teaches these limitations for the reasons

described above regarding Ground 10, claim 11.

243. Thus, Galda in view of Dowling and Bury renders obvious claims 23 and 35.

XIV. DECLARATION IN LIEU OF OATH

I hereby declare that all statements made herein of my own knowledge are true and that all statements made on information and belief are believed to be true; and further that these statements were made with the knowledge that willful false statements and the like so made are punishable by fine or imprisonment, or both, under § 1001 of Title 18 of the United States Code and that such willful false statements may jeopardize the validity of the application or any patent issued thereon. If called to testify as to the truth of the matters stated herein, I could and would testify competently.

I declare under penalty of perjury that the foregoing is true and correct.

April 7, 2025

Harry V. Bims, Ph. D.

Samsung Exhibit 1002, Page 91 of 149
Samsung Electronics Co., Ltd. et al. v. Genghiscomm Holdings LLC

Dr. Harry V. Bims
Protocomm Systems, LLC
2665 Marine Parkway, Suite 1140
Mountain View, CA 94043
harrybims@me.com
650-283-4174

PROFESSIONAL SUMMARY

Harry Bims, PhD, EE, provides expert witness support services for telecommunications-related intellectual property litigation. These services include deposition and court testimony, expert reports, and infringement research, for patent, copyright, and trade secret litigation matters. He has 30+ years of telecommunications industry experience, and holds twenty-two US patents in network architecture and chip design for wireless communications.

EMPLOYMENT HISTORY

12/2001 - 05/2004 **AirFlow Networks, Inc. ● Sunnyvale, California**

Position: *CEO/CTO & Founder*

As the sole founder of the company, created the original business plan, raised venture capital, and hired the core engineering team. Grew the company to 32 people and shipped products for revenue in the US and overseas. Fifteen patents on the core technology have issued. These patents, which relate to wireless network infrastructure based on the 802.11 specification, have been sold to Broadcom.

03/2001 - 12/2001 **Bay Partners LLC ● Cupertino, California**

Position: *Entrepreneur in Residence*

Reported to the partners of this VC firm as a technology expert on a range of wireless and networking subjects. Reviewed business plans and participated in due diligence activities related to several startups seeking funding. Developed a business plan for a startup that builds network infrastructure for 802.11 enterprise networks.

09/1999 - 03/2001 **Symmetry Communications Systems Inc ● San Jose, California**

Position: *Director, Software Architecture*

Samsung Exhibit 1002, Page 92 of 149
Samsung Electronics Co., Ltd. et al. v. Genghiscomm Holdings LLC

Reporting to the CEO, responsible for the software architecture of their core SGSN and GGSN products for the GPRS market. Formulated a software technology roadmap, showing the evolution from 2.5G to 3G SGSN and GGSN products. Management responsibility for Firmware, Hardware, Performance, and Systems Engineering Groups. Provided management support of early field trials of the system on a global basis.

07/1999 - 09/1999 **T-SPAN Systems Corporation ● Palo Alto, California**

Position: *Member of Technical Staff*

Designed a wireless home LAN protocol for the company. Also designed and built a PC-based platform to demonstrate their technology. Company is now publicly traded as Atheros Communications.

07/1992 - 12/1998 **Glenayre Technologies-Wireless Access Group ● San Jose, California**

Position: *Member of Technical Staff; Sr. Member of Technical Staff; Manager of NOC Systems*

Employee #6 at the company, which was acquired by Glenayre Technologies, Nov 1997. Designed and built a 4-channel ReFLEX50 pager demonstration in 1 week. Participated in early field trials and feasibility studies, culminating in a Pioneer's Preference license award from the FCC to SkyTel Corporation for Narrowband PCS development.

Invented, designed, and built from concept through full implementation, a patented two-way pager test system for the ReFLEX50 and ReFLEX25 protocols. This system was used throughout company operations for performance testing of the ReFLEX pager designs from Wireless Access, and Motorola. Over 16 systems were deployed around the country for manufacturing tests, engineering protocol tests, antenna tests, and pager repair tests.

The project required technical skills in PC hardware design, C++, object-oriented programming, signal processing techniques, NT device driver development, Win32 user interface development, real-time, multi-threaded control, and proficiency with wireless communications lab equipment. Three patents have been issued based on technical inventions in this capacity.

Co-developed a wireless application protocol for sending and receiving encrypted email messages over the paging channel. Led the project team that deployed a software encryption module based on this protocol for government agencies.

10/2012 – Present **BoughtStuff, Inc ● Palo Alto, California**

Samsung Exhibit 1002, Page 93 of 149
Samsung Electronics Co., Ltd. et al. v. Genghiscomm Holdings LLC

Position: *Founder*

The company has developed a mobile application for storage and delivery of product information to smartphones over wireless networks.

Bims Laboratories, Inc Work History

6/2009 – 7/2009 **Eastman Kodak Company ● Rochester, NY**

Position: *Technology Consultant*

Providing technology assessment on certain wireless communication patents.

10/2009 – 1/2017 **IEEE 802.16 Working Group**

Position: *Task Group Secretary, Task Group Vice-Chair, Task Group Chair, Working Group Vice-Chair & Secretary, IEEE 802.16 Expert*

Served in several leadership capacities within this group that is working on improvements to the IEEE 802.16 standard, otherwise known as WiMAX. The 802.16 Working Group entered hibernation on March 2018. From that time until the present, I am on the roster of Experts designated by the Chair to answer questions and provide clarification about the 802.16 standards.

2/2014 – Present **Access Network Protocol Development**

Position: *Technical Lead Developer*

Developing a C++17-based DES of SDRs for wired and wireless network protocols, that includes IMT-2020 channel models. Implementations of the IEEE 802 and LTE protocol families, plus PTP, PPoE, IPv6, digital cable, Bluetooth, DSL, frame relay and many other managed node models for smart grid and vertical IoT applications. Used for technical analysis of emerging wireless standards amendments.

Protocomm Systems, LLC Consulting History

04/1999–07/1999 **Gigabit Wireless, Inc. ● San Jose, California**

Position: *Technical Leader*

Technical leader for the Wireless MAC design group. Responsible for

comparative analysis of competing wireless MAC protocol standards. Responsible for the creation of a proprietary MAC protocol specification document, simulation of the protocol, and implementation in a prototype. Participated in early 802.16 protocol standards. This company was acquired by Intel Corporation.

3/2007 – 10/2009 **Apple, Inc. ● Cupertino, CA**

Position: *Technology Consultant*

Participating in IEEE 802.16 standards meetings as an affiliate of the client.

7/2003 – Present **Various expert witness engagements (see below)**

Position: *Technical Expert Witness*

Testified as a wireless technology expert in patent infringement cases. For a list of such cases, see below.

Technical Expert Witness Experience

10/2024 – Present **Fish & Richardson LLP (representing Apple)**

Case: Resonant Systems, Inc. d/b/a RevelHMI v. Apple Inc.

Civil Action No. 7:23-cv-00077-ADA

Location: UNITED STATES DISTRICT COURT FOR THE WESTERN DISTRICT OF TEXAS, MIDLAND-ODESSA DIVISION

Testifying expert in this patent case involving haptic technology

For Plaintiff:

For Defendant: Fish & Richardson, LLP

Attorneys:

Status: Case ongoing

03/2024 – Present **Client: Fish & Richardson, LLP (representing General Motors Company, and General Motors LLC ("GM"), Tesla Inc., and American Honda Motor Co., Inc., and Honda Development & Manufacturing of America, LLC ("Honda")**

Client: DLA Piper LLP (representing Toyota Motor North America, Inc., Toyota Motor Sales, U.S.A., Inc., and Toyota Motor Engineering & Manufacturing North America, Inc., and Toyota Motor Credit Corporation ("Toyota")

Client: Venable LLP (representing FCA US LLC)

Client: Brooks Kushman LLP (representing Ford Motor Co.)

Client: Jenner & Block LLP (representing Nissan North America Inc. and Nissan Motor Acceptance Corporation A/K/A Nissan Motor Acceptance Company LLC ("Nissan")

Case: Neo Wireless, LLC v GM, Tesla, Honda, Toyota, FCA US LLC, Ford Motor Co., and Nissan, Civil Action No. 2:22-MD-03034-TGB (E.D. Mich)

Location: UNITED STATES DISTRICT COURT FOR THE EASTERN DISTRICT OF MICHIGAN SOUTHERN DIVISION

Testifying expert in this District Court matter involving 5G communications.

Expert Report:

March 28, 2024 Opening Expert Report on Invalidity

April 25, 2024 Rebuttal Expert Report on Non-Infringement

May 23, 2024 Expert Deposition

Attorneys: For Plaintiff:

For Defendant: Fish & Richardson, LLP, DLA Piper LLP, Venable LLP, Broosk Kushman LLP, Jenner & Block LLP

Status: Case ongoing

3/2024 – Present **Client: Finnegan, Henderson, Farabow, Garrett, & Dunner, LLP (representing Motorola Mobility LLC)**

Case: Lenovo (UNITED STATES) Inc. and Motorola Mobility LLC (Petitioners) v. Headwater Research LLC. (Patent Owner)

IPR Petition relating to Headwater Research LLC v Motorola Mobility LLC and Lenovo (United States) Inc. Case No. 4:23-cv-04496-JST (N.D. Cal.)

Location: UNITED STATES PATENT AND TRADEMARK OFFICE BEFORE THE PATENT TRIAL AND APPEAL BOARDa

Testifying expert in these matters involving application-level prioritization across networks.

April 17, 2024 Expert Declaration ISO IPR Petition regarding US Patent 9,198,076

July 17, 2024 Expert Declaration ISO IPR Petition regarding US Patent 10,749,700

July 15, 2024 Expert Declaration ISO IPR Petition regarding US Patent 9,198,076

August 8, 2024 Expert Declaration regarding US Patent 9,198,076

Attorneys: For Patent Owner:

For Petitioner: Finnegan

Status: Case ongoing

2/2024 – Present **Client: Bookoff McAndrews LLP (representing Motorola Mobility, LLC)**

Case: Patent Litigation between Ericsson and Motorola/Lenovo in Colombia

Location Testifying expert in these matters involving 5G networking technology.

Expert Declaration:

March 4, 2024 (COLOMBIA) Non-Essentiality and Non-Infringement Technical Opinion regarding CO38083

March 20, 2024 (COLOMBIA) Invalidity Technical Opinion regarding CO38001

March 27, 2024 (COLOMBIA) Non-Infringement Technical Opinion regarding CO38001

March 27, 2024 (COLOMBIA) Non-Infringement Technical Opinion regarding CO36031

March 27, 2024 (COLOMBIA) Non-Infringement Technical Opinion regarding CO37362

April 16, 2024 (COLOMBIA) Non-Infringement and Non-Essentiality Technical Opinion regarding CO37550

April 19, 2024 (COLOMBIA) Non-Essentiality Technical Opinion regarding CO38002

July 19, 2024 (COLOMBIA) Invalidity Technical Opinion Regarding CO38457

Attorneys: For Plaintiff:

For Defendant: Bookoff McAndrews, LLP

Status: Case ongoing

2/2024 – Present **Client: Fish & Richardson, LLP (representing Lenovo (United States))**

Case: Certain Cellular Base Station Communication Equipment, Components Thereof, and Products Containing Same
U.S. Int'l Trade Commission Inv. No. 337-TA-1388

U.S. Int'l Trade Commission Inv. No. 337-TA-1397

Location: UNITED STATES INTERNATIONAL TRADE COMMISSION – Administrative Law Judge Hon. Bryan F. Moore

Testifying expert in this patent case involving 5G networking technology

August 7, 2024	Declaration Regarding Claim Construction
August 21, 2024	Rebuttal Declaration Regarding Claim Construction
September 10, 2024	Initial Expert Report Regarding Infringement and Domestic Industry
September 25, 2024	Rebuttal Expert Report Regarding Validity
October 4, 2024	Expert deposition testimony
December 9-10, 2024	Live testimony at 1397 trial.

Attorneys: For Plaintiff:

For Defendant: Fish & Richardson

Status: ITC case ongoing

2/2024 – Present **Greenberg Traurig LLP (representing Samsung)**

Case: Samsung Electronics Co., Ltd., (Petitioner) v. Asus Technology Licensing Inc. (Patent Owner), IPR2024-00614

Location: UNITED STATES PATENT AND TRADEMARK OFFICE BEFORE THE PATENT TRIAL AND APPEAL BOARD

Testifying expert in this patent case involving LTE networking technology

March 8, 2024: PTAB Declaration ISO IPR petition

August 12, 2024: PTAB Declaration ISO IPR petition – US Patent 10,785,759

Attorneys: For Patent Owner:

For Petitioner: Greenberg Traurig LLP

Status: Case ongoing

7/2022 – Present **Client: Fish & Richardson LLP (representing LG Electronics, Inc.)**

Case: LG Electronics, Inc. v Invention Investment Fund I, L.P., Invention Investment Fund II, LLC, Intellectual Ventures I, LLC, and Intellectual Ventures II, LLC., Civil Action No. N22C-11-145-SKR-CCLD

Location: SUPERIOR COURT FOR THE STATE OF DELAWARE

Testifying expert in these matters relating to a breach of a License Agreement

April 19, 2024: Opening Expert Report

October 10 – 15, 2024: Live trial testimony

Attorneys: For Plaintiff: Fish & Richardson LLP

For Defendant:

Status: Jury award

1/2024 – Present **Client: Kramer Levin Naftalis & Frankel, LLP (representing Acceleration Bay, LLC.)**

Case: Acceleration Bay, LLC v Amazon Web Services, Inc.

Civil Action No.: 22-904-RGA-SRF

Location: UNITED STATES DISTRICT COURT FOR THE DISTRICT OF DELAWARE – Hon. Richard G. Andrews

Testifying expert in this patent case involving internet data broadcasting.

Expert Declaration:

February 12, 2024: Expert Report Regarding Technology Tutorial of Asserted Patents

May 28, 2024 Live Deposition Testimony

September 23, 2024 Live trial testimony

Attorneys: For Plaintiff: Kramer Levin, Naftalis, & Frankel LLP

For Defendant: Fisch Sigler LLP

Status: Jury Award

12/2023 – Present **Kirkland & Ellis LLP (representing Motorola Mobility LLC & Lenovo)**

Case: Certain Mobile Phones, Components Thereof, and Products Containing the Same
U.S. Int'l Trade Commission Inv. No. 337-TA-1375

Certain Electronic Devices, including Mobile Phones, Tablets, Laptops, Components Thereof, and Products Containing the Same
U.S. Int'l Trade Commission Inv. No. 337-TA-1376

Telefonaktiebolaget LM Ericsson v Lenovo (United States), Inc.
Civil Action No. 5:23-cv-569 (E.D.N.C.)

Lenovo (United States) v Telefonaktiebolaget LM Ericsson
Civil Action No. 5:23-cv-570 (E.D.N.C.)

IPR Petition Lenovo (United States) Inc. (Petitioner) v Telefonaktiebolaget LM Ericsson (Patent Owner)

Location: UNITED STATES INTERNATIONAL TRADE COMMISSION
Administrative Law Judge Hon. MaryJoan McNamara

Testifying expert in this patent case involving 5G networking technology.

March 15, 2024 IPR Declaration ISO Petition for IPR Review

April 30, 2024 Expert Report on Invalidity

May 14, 2024 Rebuttal Expert Report Regarding Non-Infringement

May 31, 2024 Deposition Testimony

July 12-15, 2024 Live Testimony at Trial

February 24, 2025 IPR Declaration ISO Petitioner's Reply to Patent Owner's Response

Attorneys: For Plaintiff:

For Defendant: Kirkland & Ellis LLP

Status: Decision pending

Location: UNITED STATES DISTRICT COURT FOR THE EASTERN DISTRICT OF NORTH CAROLINA

Attorneys: For Plaintiff:

For Defendant: Kirkland & Ellis LLP

Status: Case ongoing

Location: UNITED STATES DISTRICT COURT FOR THE EASTERN DISTRICT OF NORTH CAROLINA

Testifying expert in this patent case involving establishing point-to-point connections between mobile devices.

Attorneys: For Plaintiff: Kirkland & Ellis LLP

For Defendant:

Status: Case ongoing

Location: UNITED STATES PATENT AND TRADEMARK OFFICE BEFORE THE PATENT TRIAL AND APPEAL BOARD
Case IPR2024-TBD

March 15, 2024: Declaration in support of Petition for IPR

Attorneys: For Petitioner: Kirkland & Ellis LLP

For Patent Owner:

Status: Case ongoing

12/2023 – Present **Fish & Richardson LLP (representing Reolink)**

Case: IPR Petition Shenzhen Reolink Technology Co., Ltd., Reolink Innovation Inc., Reolink Innovation Co., Ltd. (China) (Patent Owner) v Throughtek, Co., Ltd. (Patent Owner), Attorney Docket No. 52472-0005IP1

Location: UNITED STATES PATENT AND TRADEMARK OFFICE BEFORE THE PATENT TRIAL AND APPEAL BOARD

January 29, 2024: PTAB Declaration ISO IPR petition

Attorneys: For Patent Owner:

For Petitioner: Kirkland & Ellis LLP

Status: Case ongoing

7/2023 – Present **Client: Finnegan, Henderson, Farabow, Garrett, & Dunner, LLP (representing MediaTek)**

Case: U.S. Int'l Trade Commission Inv. No. 337-TA-1367

Certain Electronic Devices and Semiconductor Devices having Wireless Communication Capabilities and Components Thereof

Location: UNITED STATES INTERNATIONAL TRADE COMMISSION –

Administrative Law Judge Hon. Bryan F. Moore

Testifying expert in this patent case involving IEEE 802.11 technology.

Expert Reports:

January 18, 2024 Rebuttal expert Report regarding Non-infringement

Videotaped Deposition:

February 15, 2024 Videotaped expert deposition

ITC Trial testimony:

March 24, 2024 Non-infringement witness statement

Attorneys: For Plaintiff:

For Defendant: Finnegan

Status: ITC case ongoing

8/2023 – Present **Kirkland & Ellis LLP (representing TP-Link Technologies Co Ltd.)**

Case: U.S. Int'l Trade Commission Inv. No. 337-TA-1361

In the Matter of Certain Wi-Fi Routers, Wi-Fi Devices, Mesh Wi-Fi Network Devices, and Hardware and Software Components Thereof (ICC Case No. 27699/PDP)

Location: UNITED STATES INTERNATIONAL TRADE COMMISSION – Administrative Law Judge Doris Johnson Hines

Testifying expert in these matters involving base station and wireless mesh technology.

November 9, 2023: Expert report concerning Invalidity

November 30, 2023: Expert rebuttal report on Non-Infringement and Technical Domestic Industry

January 22, 2023: Live testimony at ITC trial

Attorneys: For Plaintiff: LLP

For Defendant: Kirkland & Ellis LLP

Status: Trial verdict pending

5/2023 – Present **Client: Fish & Richardson LLP (representing Samsung Electronics, Co. Ltd.)**

Case: In the Matter of an Arbitration Pursuant to the Rules of the International Court of Arbitration of the International Chamber of Commerce (ICC Case No. 27699/PDP)

Location: INTERNATIONAL CHAMBER OF COMMERCE

Testifying expert in these matters involving international patent arbitration between Interdigital and Samsung.

January 8, 2024 Rebuttal expert report

June 18, 2024 Second expert report

Attorneys: For Plaintiff: Alston & Bird LLP

For Defendant: Fish & Richardson LLP

Status: Case ongoing

10/2022 – 2/2023 **Client: Finnegan, Henderson, Farabow, Garrett & Dunner LLP (representing Samsung Electronics, Co. Ltd.)**

Case: IPR Petition relating to Apex Beam Technologies, LLC v. Samsung Electronics, Co. Ltd., Civil Action No. 2:22-cv-00188)

Location: UNITED STATES PATENT AND TRADEMARK OFFICE BEFORE THE PATENT TRIAL AND APPEAL BOARD

Testifying expert in these matters involving smart antenna technology.

February 27, 2023: Expert Declaration ISO petition for Inter Partes review

February 28, 2023: "Xia" Expert Declaration ISO petition for Inter Partes review

February 28, 2023: "Liu" Expert Declaration ISO petition for Inter Partes review

Attorneys: For Patent Owner:

For Petitioner: Finnegan, Henderson, Farabow, Garrett & Dunner LLP

Status: Case settled

7/2022 – Present **Client: Russ, August & Kabat LLP (representing Vivato, Inc.)**

Case: XR Communications, LLC d/b/a Vivato Technologies v D-Link Systems, Inc., Civil Action No. 8:17-cv-00596-DOC(JDE)

Location: UNITED STATES DISTRICT COURT FOR THE CENTRAL DISTRICT OF CALIFORNIA – Hon. David O. Carter

Testifying expert in these matters involving smart antenna technology.

Expert Declaration:

August 23, 2022: Rebuttal Expert Report on Validity

August 31, 2022: Deposition testimony

Attorneys: For Plaintiff: Russ, August & Kabat LLP

For Defendant:

Status: Case ongoing

6/2022 – 1/2024 **Client: Fish & Richardson LLP (representing Samsung Electronics, Co. Ltd.)**

Case: G+ Communications, LLC v Samsung Electronics Co. Ltd. et. al, Civil Action No. 2:22-cv-78

Location: UNITED STATES DISTRICT COURT FOR THE EASTERN DISTRICT OF TEXAS – Hon. Rodney Gilstrap

Testifying expert in these matters involving smart antenna technology.

March 13, 2023: Expert Declaration ISO Samsung Defendants' Claim Construction Proposals

June 28, 2023: Opening Expert Report on Invalidity

December 18, 2023: PTAB Declaration ISO IPR Petition

Attorneys: For Plaintiff: Russ, August & Kabat LLP

For Defendant: Fish & Richardson

Status: Jury trial verdict

5/2022 – 6/2023 **Client: Kilpatrick Townsend LLP (representing Apple, Inc.)**

Case: IPR Petition relating to Apple, Inc. v. Mullen Industries LLC, Civil Action No. 6:22-cv-00145

Location: UNITED STATES PATENT AND TRADEMARK OFFICE BEFORE THE PATENT TRIAL AND APPEAL BOARD

Testifying expert in these matters involving remote notification devices.

August 8, 2022: Expert Declaration

May 23, 2023: Expert Deposition

Attorneys: For Patent Owner: Mintz, Levin, Cohn, Ferris, Glovsky, and Popeo, P.C.

For Petitioner: Kilpatrick Townsend LLP

Status: Case settled

3/2022 – 9/2023 **Client: Kirkland & Ellis LLP (representing Samsung Electronics Co. Ltd.)**

Case: California Institute of Technology v Samsung Electronics Co. Ltd., Civil Action No. 2:21-cv-00446

Location: UNITED STATES DISTRICT COURT FOR THE EASTERN DISTRICT OF TEXAS – Hon. Rodney Gilstrap

Testifying expert in these matters involving LDPC codes.

November 22, 2022: Declaration regarding claim construction

December 20, 2022: Rebuttal Declaration regarding claim construction

May 22, 2023: Rebuttal expert report on non-infringement

May 31, 2023: Deposition testimony

Attorneys: For Petitioner: Kirkland & Ellis LLP

For Plaintiff: Mintz, Levin, Cohn, Ferris, Glovsky, and Popeo, P.C.

Status: Case settled

2/2022 – 12/2022 **Client: Fish & Richardson LLP (representing Apple, Inc.)**

Case: Litigation between Ericsson and Apple in Belgium, Brazil, Germany, Netherlands, and Colombia, and US matters:

Ericsson Inc. et. al. v. Apple Inc., Civil Action No. 6:22-cv-00061-ADA

Ericsson Inc., et. al, v. Apple Inc., Civil Action No. 2:21-cv-00376

Apple Inc. v. Telefonaktiebolaget LM Ericsson, et. al., Civil Action No. 2:21-cv-00460

In the Matter of Certain Mobile Phones Tablet Computers, Smart Watches, Smart Speakers, and Digital Media Players, and Products Containing Same.

U.S. Int'l Trade Commission Inv. No. 337-TA-3596

Location: UNITED STATES DISTRICT COURT FOR THE WESTERN DISTRICT OF TEXAS WACO DIVISION – Hon. Alan D. Albright

UNITED STATES DISTRICT COURT FOR THE EASTERN DISTRICT OF TEXAS

UNITED STATES INTERNATIONAL TRADE COMMISSION

Testifying expert in these matters involving 5G networking technology.

Expert Declaration:

May 18, 2022 COLOMBIA: Invalidity and Non-Infringement Technical Opinion regarding certain Colombia patents

April 27, 2022 COLOMBIA: Invalidity and Non-Infringement Technical Opinion regarding certain Colombia patents #1

April 27, 2022 COLOMBIA: Invalidity and Non-Infringement Technical Opinion regarding certain Colombia patents #2

March 28, 2022 COLOMBIA: Invalidity and Non-Infringement Technical Opinion regarding certain Colombia patents

March 9, 2022 BRAZIL: Invalidity Technical Opinion regarding Brazil patents

May 26, 2022 BRAZIL: Response to Ericsson Statement regarding Brazil patents

August 25, 2022 BRAZIL: Live testimony before the Brazil Patent and Trademark Office regarding invalidity

November 15, 2022 (COLOMBIA) Invalidity and Non-Infringement Technical Opinion regarding CO37550

Attorneys: For Plaintiff:

For Defendant: Fish & Richardson, LLP

Status: Case settled

1/2022 – 3/2023 **Client: Finnegan LLP (representing Toyota Motor Corp., et. al.)**

Case: Intellectual Ventures I LLC, et. al. v. Toyota Motor Corp., et. al., Civil Action No. 2:21-cv-389

Toyota Motor Corp. (Petitioner) v. Intellectual Ventures II, LLC (Patent Owner) Case No. IPR2022-01355

Location: UNITED STATES DISTRICT COURT FOR THE WESTERN DISTRICT OF TEXAS MARSHALL DIVISION –

UNITED STATES PATENT AND TRADEMARK OFFICE BEFORE THE PATENT TRIAL AND APPEAL BOARD

Testifying expert in this District Court and PTAB matter involving IEEE 802.11 wireless networking.

Expert Declaration:

January 13, 2023: Marshall Division Declaration on Invalidity

August 25, 2022: PTAB Declaration ISO Petition for IPR

April 8, 2024: PTAB Declaration ISO Petition for IPR2022-00973

Attorneys: For Plaintiff:

For Defendant/Petitioner: Finnegan, LLP

Status: Case settled

9/2021 – Present **Client: Schulte, Roth & Zabel LLP (representing TrackThings LLC)**

Case: TrackThings LLC v. NETGEAR, Inc. Civil Action No. 22-981-RGA-JLH

Location: UNITED STATES DISTRICT COURT FOR THE DISTRICT OF DELAWARE –

Testifying expert in this District Court matter involving wireless network reconfiguration.

July 9, 2024 Expert Rebuttal report regarding Validity of US Patent Nos. 9,642,017, 9,332,442, and 10,107,893

August 15, 2024 Reply Expert Report regarding infringement

July 9, 2024 Rebuttal Expert Report regarding Validity

October 17, 2024 Deposition testimony

Attorneys: For Plaintiff: Schulte, Roth, and Zabel

For Defendant: Quinn Emanuel

Status: Case ongoing

9/2021 – Present **Client: Stroock LLP/Schulte, Roth & Zabel (representing TrackThings LLC)**

Case: TrackThings LLC v. Amazon.com, Inc. and Amazon.com Services LLC, and eero LLC., Civil Action No. 6:21-cv-00720; Civil Action No. 6:23-cv-00133-ADA

Location: UNITED STATES DISTRICT COURT FOR THE WESTERN DISTRICT OF TEXAS WACO DIVISION – Hon. Alan D. Albright

Testifying expert in this District Court matter involving wireless network reconfiguration.

March 17, 2023: Expert declaration ISO claim construction responses

February 24, 2023	Rebuttal Expert report regarding Validity
January 25, 2024	Expert report on Infringement
February 9, 2024	Expert report regarding Infringement
March 8, 2024	Rebuttal Expert report regarding Validity
March 29, 2024	Live deposition testimony

Attorneys: For Plaintiff: Schulte, Roth, and Zabel

For Defendant: Quinn Emanuel

Status: Case ongoing

12/2020 – Present **Client: BlankRome (representing Samsung Electronics Co., Ltd)**

Case: TOT Power Control, S.L. v. Samsung Elecs. Co., Ltd and Samsung Elecs. Am. Inc., Civil Action No. 1:21-cv-01305-MN

IPR Petition relating to TOT Power Control, S.L. v. Samsung Elecs. Co., Ltd and Samsung Elecs. Am. Inc., Civil Action No. 1:21-cv-01305-MN

Location: UNITED STATES DISTRICT COURT FOR THE DISTRICT OF DELAWARE – Hon. Maryellen Noreika

UNITED STATES PATENT AND TRADEMARK OFFICE BEFORE THE PATENT TRIAL AND APPEAL BOARD

Testifying expert in this district court and IPR proceeding involving power control methods in wireless systems.

September 12,2022	Expert Declaration regarding IPR for 865 patent
August 23, 2024	Expert Report on Invalidity
October 1, 2024	Expert report on Non-infringement
October 22, 2024	Reply Expert Report on Invalidity
November 8, 2024	Live deposition testimony

Attorneys: For Plaintiff: DLA Piper

For Defendants: Blank Rome

For Patent Owner: Hausfeld, LLP

For Petitioner: Blank Rome

Status: Case ongoing

5/2024 – Present **Client: BlankRome (representing Samsung Electronics Co., Ltd)**

Case: Secure Wi-Fi LLC v. Samsung Elecs. Co., Ltd and Samsung Elecs. Am. Inc., Civil Action No. 2:24-cv-00047

IPR Petition relating to TOT Power Control, S.L. v. Samsung Elecs. Co., Ltd and Samsung Elecs. Am. Inc., Civil Action No. 1:21-cv-01305-MN

Location: UNITED STATES DISTRICT COURT FOR THE EASTERN DISTRICT OF TEXAS

Testifying expert in this IPR proceeding involving randomizing MAC addresses in Wi-Fi networks.

September 3, 2024	Expert Declaration regarding IPR for 384 patent
September 3, 2024	Expert Declaration regarding IPR for 005 patent
September 3, 2024	Expert Declaration regarding IPR for 552 patent

Attorneys: For Petitioner: Blank Rome, LLP

Status: Case ongoing

10/2021 – 5/2022 **Client: Finnegan, Henderson, Farabow, Garrett & Dunner, LLP (representing MediaTek Inc.)**

Case: NXP USA, Inc. v. MediaTek Inc., et. al., Civil Action No. 2:21-cv-000318-JRG – Hon. Rodney Gilstrap

Location: UNITED STATES DISTRICT COURT FOR THE EASTERN DISTRICT OF TEXAS MARSHALL DIVISION

Testifying expert in this District Court matter involving 802.11n, 802.11ac, and 802.11ax chipsets.

Expert Report:

February 3, 2022	Declaration ISO Defendant's Claim Construction Brief

Attorneys: For Plaintiff: Duane Morris, LLP

For Defendant: Finnegan, LLP

Status: Case settled

09/2021 – 9/2024 **Client: Fish & Richardson, LLP (representing Samsung Electronics Co., Ltd., et. al.)**

Case: Smart Mobile Technologies, LLC v. Samsung Electronics Co., Ltd., et. al., Civil Action No. 6:21-cv-00701-ADA. Hon. Alan D. Albright

Location: UNITED STATES DISTRICT COURT FOR THE WESTERN DISTRICT OF TEXAS WACO DIVISION

Testifying expert in this District Court matter involving wireless voice and data transfer.

Expert Report:

June 8, 2022 Declaration ISO Defendant's Claim Construction Brief

Attorneys: For Plaintiff: Hagens Berman Sobol Shapiro, LLP

For Defendant: Fish & Richardson, LLP

Status: Case closed

05/2021 – 6/2021 **Client: Sidley Austin (representing HP Inc. and Microsoft Corporation)**

Case: SynKloud Technologies, LLC v. HP Inc., Civil Action No. 1:19-cv-01360-RGA and Microsoft Corporation v. SynKloud Technologies, LLC, Civil Action No. 1:20-cv-00007-RGA

Location: UNITED STATES DISTRICT COURT FOR THE DISTRICT OF DELAWARE

Testifying expert in this District Court matter involving wireless cloud storage.

Expert Report:

June 25, 2021 Declaration ISO Microsoft and HP's Claim Construction Brief

Attorneys: For Plaintiff:

For Defendant: Sidley Austin

Status: Case settled

05/2021 – 5/2022 **Client: DLA Piper (representing Motorola Mobility LLC)**

Case: U.S. Int'l Trade Commission Inv. No. 337-TA-1253

Certain LTE-Compliant Cellular Communication Devices

Motorola v. Evolved Wireless LLC.

Location: UNITED STATES INTERNATIONAL TRADE COMMISSION – Administrative Law Judge Cameron R. Elliot

Testifying expert in this ITC matter involving LTE cellular device handover.

Expert Report:

November 16, 2021 Expert Report on NonInfringement and Lack of Technical Domestic Industry

Expert Testimony:

December 15, 2021 Deposition testimony

Attorneys: For Plaintiff: Nelson Bumgardner Albritton P.C.; Adduci, Mastriani & Schaumberg, LLP

For Defendant: DLA Piper

Status: Case settled

04/2021 – 6/2022 **Client: Desmarais LLP (representing Google LLC and FitBit Inc.)**

Case: Cellspin Soft, Inc. v. Fitbit, Inc., No. 4-17-cv-05928-YGR

Location: UNITED STATES DISTRICT COURT FOR THE NORTHERN DISTRICT OF CALIFORNIA

Hon. Yvonne Gonzalez Rogers

Testifying expert in this patent case involving the distribution of real-time health data.

Expert Testimony:

October 29, 2021 Expert Report on NonInfringement

Attorneys: For Plaintiff: Garteiser Honea PLLC and Corcoran IP Law PLLC

For Defendant: Desmarais LLP

Status: Case settled. Summary Judgment for Non-Infringement.

3/2021 – 9/2021 **Client: Fish & Richardson (representing Samsung)**

Case: U.S. Int'l Trade Commission Inv. No. 337-TA-1248

Certain Cellular Communications Infrastructure Systems, Components Thereof, and Products Containing Same

U.S. Int'l Trade Commission Inv. No. 337-TA-DN-3525

Certain Cellular Communications Infrastructure Systems, Components Thereof, and Products Containing Same

Location: UNITED STATES INTERNATIONAL TRADE COMMISSION

Testifying expert in this ITC matter regarding 3GPP technology.

Attorneys: For Plaintiff: Winston & Strawn, LLP

For Defendant: Fish & Richardson, LLP

Status: Case terminated in its entirety based on an Initial Determination.

2/2021 – 11/2021 **Client: Fish & Richardson (representing Quectel)**

Client: Axinn, Veltrop & Harkrider LLP (representing Thales DIS AIS USA, LLC)

Client: Pearl Cohen LLP (representing Telit)

Case: U.S. Int'l Trade Commission Inv. No. 337-TA-1240

Certain UMTS and LTE Cellular Communication Modules and Products Containing the Same

Koninklijke Philips N.V. v Quectel Wireless Solutions Co. Ltd., Thales DIS AIS Deutschland GmbH, Thales S.A., Telit Wireless Solutions, Inc., Telit Communications PLC, CalAmp Corp, Xirgo Technologies, LLC, Laird Connectivity, Inc., Thales DIS AIS USA LLC

Case No. 1:20-cv-1713 (D. Del)

Location: UNITED STATES INTERNATIONAL TRADE COMMISSION – Administrative Law Judge Hon. David P. Shaw

Testifying expert on 3GPP mobile device operation.

Expert Testimony:

July 21, 2021	Expert Report on Invalidity
August 6, 2021	Deposition Testimony
October 12, 2021	Live Testimony before ALJ David P. Shaw

Attorneys: For Plaintiff: Mayer Brown LLP

For Defendants: Fish & Richardson; Axinn, Veltrop & Harkrider LLP

Status: Case closed

11/2020– Present **Client: Orrick, Herrington & Sutcliffe LLP (representing PayPal Holdings, Inc.)**

Case: IOENGINE LLC v PayPal Holdings, Inc.

Civil Action No. 1:18-cv-00452-WCB

Location: UNITED STATES DISTRICT COURT FOR THE DISTRICT OF DELAWARE

Hon. William C. Bryson

Testifying expert in this patent case involving peripheral device communication to remote servers.

Expert Testimony:

November 19, 2021	Expert Report on Invalidity
January 7, 2022	Expert Report on Non-Infringement
January 20-21, 2022	Deposition Testimony on Invalidity and Non-Infringement

Status: Case ongoing

11/2020 – Present **Client: DLA Piper (representing Apple, Inc.)**

Case: Maxell v. Apple Inc. In the Matter of Certain Mobile Electronic Devices and Laptop Computers

U.S. Int'l Trade Commission Inv. No. 337-TA-1215

Location: UNITED STATES INTERNATIONAL TRADE COMMISSION – Administrative Law Judge Hon. Dee Lord

Testifying expert on 3GPP mobile device operation.

Expert Testimony:

February 25, 2021: Opening Expert Report Regarding Invalidity

March 11, 2021: Rebuttal Expert Report regarding NonInfringement and Lack of Technical Domestic Industry

March 24, 2021: Videotaped deposition

Attorneys: For Plaintiff: Mayer Brown LLP

For Defendant: DLA Piper LLP

Status: Case settled

11/2020– 11/2020 **Client: Folio Law Group PLLC (representing Dali Wireless)**

Case: Dali Wireless, Inc. v. John Mezzalingua Associates, LLC d/b/a JMA Wireless and Teko Telecom SRL (an Italian Corporation)

Civil Action No. 19-2367-RGA

Location: UNITED STATES DISTRICT COURT FOR THE DISTRICT OF DELAWARE

Testifying expert in this patent case involving distributed antenna system networks.

Expert Testimony:

November 6, 2020: Declaration Regarding Interpretation of Asserted Claims

Status: Case closed

8/2020– 8/2022 **Client: Folio Law Group PLLC (representing Dali Wireless)**

Case: Dali Wireless, Inc. v. Corning Optical Communications, LLC,

Civil Action No. 3:20-cv-06469-EMC

Location: UNITED STATES DISTRICT COURT FOR THE WESTERN DISTRICT OF TEXAS – Hon. Edward M. Chen

Testifying expert in this patent case involving distributed antenna system networks.

Expert Testimony:

February 12, 2021: Declaration Regarding Interpretation of Asserted Claims

June 29, 2022: Expert Report on Infringement

August 22, 2022: Deposition Testimony

October 11, 2022: Supplemental Expert Report on Infringement

Status: Case closed

3/2020– 8/2021 **Client: Folio Law Group PLLC (representing Dali Wireless)**

Case: Dali Wireless, Inc. v. CommScope Technologies, LLC and CommScope Holding Company, Inc..

Civil Action No. 1:19-cv-00952-MN

Location: UNITED STATES DISTRICT COURT FOR THE DISTRICT OF DELAWARE – Hon. Maryellen Noreika

Testifying expert in this patent case involving distributed antenna system networks.

Expert Testimony:

June 23, 2021: Expert report on infringement.

August 17, 2021: CORRECTED Reply Expert report on infringement of ’338 Patent

Status: Case closed

03/2020 – 8/2022 **Client: Sidley Austin LLP (representing Lenovo and Motorola)**

Case: InterDigital Technology Corporation, IPR Licensing, Inc., InterDigital Communications, Inc., InterDigital Holdings, Inc., and InterDigital, Inc. v. Lenovo Holding Company, Inc., Lenovo (United States) Inc., and Motorola Mobility LLC

Civil Action No. 19-1590-LPS

Location: UNITED STATES DISTRICT COURT FOR THE DISTRICT OF DELAWARE

Hon. Leonard P. Stark

Testifying expert in this patent case involving 3G and 4G cellular standards.

Expert Testimony:

April 16, 2022 Expert report on Invalidity of ’665 and ’954 patents

June 16, 2022 Expert Report on Invalidity of 8,675,612 and 9,456,449 patents

June 16, 2022 Rebuttal Expert Report on Invalidity of 8,085,665 and 8,427,954 patents

July 17, 2022 Rebuttal expert report regarding non-infringement of ’612 and ’449 patents

July 18, 2022 Rebuttal expert report on non-infringement of ’665 and ’954 patents

August 8, 2022 Rebuttal Expert Report on Invalidity of ’612 and ’449 patents

August 31, 2022 Videotaped expert Deposition

Status: Case closed

3/2020– 5/2022 **Client: Finnegan, Henderson, Farabow, Garrett & Dunner LLC (representing Google)**

Case: IPR Petition Google LLC, v. Sonos, Inc., Case No. IPR2021-01563

Location: UNITED STATES PATENT AND TRADEMARK OFFICE BEFORE THE PATENT TRIAL AND APPEAL BOARD

Testifying expert in this IPR proceeding involving wireless home speaker systems.

Expert Testimony:

September 27, 2021: Declaration ISO petition for Inter Partes Review

May 10, 2022: Supplemental declaration ISO petition for Inter Partes Review

June 29, 2022: Videotaped deposition testimony

Status: Case closed

08/2019 – 6/2021 **Client: Fish & Richardson (representing Finjan, Inc.)**

Case: Finjan, Inc. v. Cisco, Inc.

Civil Action No. 5:17-cv-00072-BLF-SVK

Location: UNITED STATES DISTRICT COURT FOR THE SOUTHERN DISTRICT OF CALIFORNIA SAN DIEGO DIVISION – Hon. Susan Van Keulen

As a testifying expert, provided a technology tutorial in this patent case involving internet security technology.

Expert Testimony:

August 14, 2019 Tutorial expert report on network security technology.

September 4, 2019 Deposition Testimony

Attorneys: For Plaintiff: Fish & Richardson

For Defendant:

Status: Case settled

8/2019 – 5/2020 **Client: Fish & Richardson (representing LG Electronics, Inc.)**

Case: Bell Northern Research, LLC v. LG Electronics, Inc., et. al.

USDC-SDCA Civil Action No. 18-cv-2864-CAB-BLM

Location: UNITED STATES DISTRICT COURT FOR THE SOUTHERN DISTRICT OF CALIFORNIA – Hon. Cathy Ann Bencivengo, Magistrate Judge: Hon. Barbara L. Major

Testifying expert on wired/wireless communication in gaming systems.

Expert Testimony:

November 20, 2019 Declaration ISO motion for summary judgment

Attorneys: For Plaintiff: Skiermont Derby LLP

For Defendant: Fish & Richardson

Status: Case closed

7/2019 – 05/2021 **Client: O'Melveny & Myers LLP (representing Apple Inc.)**

Case: Maxell, Ltd. v. Apple Inc.,

Case No. 5:19-cv-00036-RWS.

Location: UNITED STATES DISTRICT COURT FOR THE EASTERN DISTRICT OF TEXAS TEXARKANA DIVISION – Hon. Robert W. Schroeder III

Testifying expert on 3G cellular telephone technology.

Expert Testimony:

May 7, 2020: Opening Expert Report Regarding Invalidity

June 4, 2020: Rebuttal Expert Report on Non-Infringement

Deposition Testimony: June 24, 2020

Attorneys: For Plaintiff: Mayer Brown LLP

For Defendant: O'Melveny & Myers LLP

Status: Case settled.

4/2019 – Present **Client: Perkins Coie (representing Nintendo of America, Inc.)**

Case: Genuine Enabling Technology LLC v. Nintendo Company Ltd., and Nintendo of America, Inc., W.D. Wash.,

Civil Action No. 2:19-cv-00351-RSM

Location: UNITED STATES DISTRICT COURT FOR THE WESTERN DISTRICT OF WASHINGTON – Hon. Ricardo S. Martinez

Testifying expert on wired/wireless communication in gaming systems.

Expert Declarations:

October 23, 2019 Declaration ISO claim constructions

November 26, 2019 Sur-reply declaration ISO claim constructions

January 23, 2020 Declaration ISO motion for summary judgment

April 20, 2020 Opening Expert Report Regarding Invalidity

Expert Depositions:

December 19, 2019

Claim Construction Hearing Testimony:

February 24, 2020 Tutorial testimony on the technology of the Asserted Patents

Attorneys: For Plaintiff: Bayard, P.A.

For Defendant: Perkins Coie

Status: Case ongoing

12/2019 – 12/2019 **Client: Erise IP (representing Apple Inc.), Haynes and Boone, LLP (representing Ericsson Inc)**

Case: Ericsson Inc. (Petitioner) v. Uniloc 2017, LLC (Patent Owner)

Apple Inc. (Petitioner) v. Uniloc 2017, LLC (Patent Owner) Case No. IPR2020-00224

Location: UNITED STATES PATENT AND TRADEMARK OFFICE BEFORE THE PATENT TRIAL AND APPEAL BOARD

Testifying expert in this IPR proceeding involving ARQ data exchange on LTE networks.

Expert Declarations:

December 16, 2019 Declaration ISO Petition for Inter Partes Review of U. S. Patent No. 7,075,917

Attorneys: For Petitioner: Erise IP; Haynes and Boone, LLP

For Patent Owner:

Status: Case closed

6/2019 – 7/2020 **Client: Fish & Richardson (representing Microsoft Corporation)**

Case: Microsoft Corp. (Petitioner) v. Uniloc 2017, LLC (Patent Owner)

Uniloc 2017, LLC v. Microsoft Corp.

USDC Central District of California, Case Nos. 8:18-cv-2053, 8:18-cv-2054, 8:18-cv-2224; 8:19-cv-0428, 8:19-cv-0477, 8:19-cv-0196

Location: UNITED STATES PATENT AND TRADEMARK OFFICE BEFORE THE PATENT TRIAL AND APPEAL BOARD

Testifying expert in this IPR proceeding involving 3GPP transport formats and

channels.

Expert Declarations:

August 6, 2019 Declaration in support of claim construction

Attorneys: For Plaintiff: Feinberg Day LLP

For Defendant: Fish & Richardson

Status: Case settled

2/2019 – 5/2020 **Client: Klarquist Sparkman, LLP (representing Microsoft Corporation)**

Case: Uniloc 2017, LLC v. Microsoft Corp.

Location: UNITED STATES PATENT AND TRADEMARK OFFICE BEFORE THE PATENT TRIAL AND APPEAL BOARD

Testifying expert in this IPR proceeding involving ARQ data exchange on LTE networks.

Expert Declarations:

April 14, 2019 Declaration ISO Petition for Inter Partes Review of U. S. Patent No. 7,075,917

Attorneys: For Plaintiff:

For Defendant: Klarquist LLP

Status: Case settled

10/2018 – 6/2021 **Client: Kramer Levin Naftalis & Frankel, LLP (representing Finjan, Inc.)**

Case: Finjan, Inc. v. Eset, Inc.

Civil Action No. 3:17-cv-00183-CAB-BGS

Location: UNITED STATES DISTRICT COURT FOR THE SOUTHERN DISTRICT OF CALIFORNIA SAN DIEGO DIVISION – Hon. Cathy Ann Bencivengo

As a testifying expert, provided a technology tutorial in this patent case involving internet security technology.

Expert Declaration:

October 5, 2018 Tutorial expert report on network security technology.

March 11, 2020 Jury trial testimony.

Attorneys: For Plaintiff: Kramer Levin, Naftalis, & Frankel LLP

For Defendant:

Status: Jury Trial Mistrial due to COVID-19.

Case closed.

9/2018 – 6/2021 **Client: Kramer Levin Naftalis & Frankel, LLP (representing Finjan, Inc.)**

Case: Finjan, Inc. v. Juniper, Inc.

Civil Action No. 15-cv-03295-BLF-SVK

Location: UNITED STATES DISTRICT COURT FOR THE NORTHERN DISTRICT OF CALIFORNIA SAN JOSE DIVISION – Hon. Beth L. Freeman

As a testifying expert, provided a technology tutorial in this patent case involving internet security technology.

Expert Declaration:

September, 11, 2018 Tutorial expert report on network security technology.

Videotaped Deposition:

November 7, 2018

Attorneys: For Plaintiff: Kramer Levin, Naftalis, & Frankel LLP

For Defendant:

Status: Case closed

9/2017 – 9/2018 **Client: (Covington & Burling representing Huawei Device USA, Inc.)**

Case: Optis Wireless Technology, LLC, et. al. v. Huawei Technologies Co. Ltd, et. al.

Civil Action No. 2:17-cv-123-JRG-RSP

Location: UNITED STATES DISTRICT COURT FOR THE EASTERN DISTRICT OF TEXAS MARSHALL DIVISION – Hon. Roy S. Payne

Testifying expert regarding 3G and LTE technology.

Expert Declarations and Reports:

November 3, 2017: Declaration regarding Claim Construction.

March 26, 2018: Initial Expert Report Regarding Invalidity

April 23, 2018: Rebuttal Expert Report on Non-Infringement

April 27, 2018: Rebuttal Expert Report on Secondary Considerations

Videotaped Deposition: May 10, 2018

May 14, 2018: Declaration in support of Motion for Partial Summary Judgment

Jury Trial Testimony: August 22, 2018 and August 23, 2018

Attorneys: For Plaintiff: McKool Smith

For Defendant: Covington & Burling

Status: Jury award

6/2017 – 4/2018 **Client: Kramer Levin Naftalis & Frankel, LLP (representing Finjan, Inc.)**

Case: Finjan, Inc. v. Symantec, Inc.

Civil Action No. 4:14-cv-02998-HSG

Location: UNITED STATES DISTRICT COURT FOR THE NORTHERN DISTRICT OF CALIFORNIA OAKLAND DIVISION

As a testifying expert, provided a technology tutorial in this patent case involving internet security technology.

Expert Declaration:

July 27, 2017 Tutorial expert report on security technology.

Videotaped Deposition:

August 29, 2017

Attorneys: For Plaintiff: Kramer Levin, Naftalis, & Frankel LLP

For Defendant: Quinn Emmanuel

Status: Case settled

5/2017 – 3/2018 **Client: Barnes & Thornburg, LLP (representing Ooma, Inc.)**

Case: Ooma, Inc. (Petitioner) v. Deep Green Wireless, LLC (Patent Owner)

Location: UNITED STATES PATENT AND TRADEMARK OFFICE BEFORE THE PATENT TRIAL AND APPEAL BOARD

As a testifying expert, provided a technology tutorial in this patent case involving voice and data communications over wireless networks.

Expert Declaration:

June 8, 2017 Expert report on prior art wireless network technology.

Videotaped Deposition:

February 15, 2018

Attorneys: For Petitioner: Barnes & Thornburg LLP

For Defendant: Mischcon De Reya New York, LLP

Status: Case closed

3/2017 – 6/2019 **Client: Fish & Richardson (representing Apple, Inc.) / Gibson, Dunn & Crutcher LLP (representing Compal Electronics, et. al.)**

Case: Apple Inc. v. Qualcomm Inc.

Qualcomm Inc. v. Compal Electronics, Inc., et. al.

Civil Action No. 3:17-cv-00108 / Civil Action No. 3:17-cv-01010

Location: UNITED STATES DISTRICT COURT FOR THE SOUTHERN DISTRICT OF CALIFORNIA – Hon. Gonzalo P. Curiel, Magistrate Judge: Hon. Mitchell D. Dembin

Testifying expert regarding LTE technology.

Expert Declaration:

December 11, 2017: Declaration regarding Claim Construction.

Expert Report:

June 29, 2018: Opening Expert Report regarding invalidity

August 3, 2018: Expert Report on infringement

October 2, 2018: Rebuttal Expert Report on Invalidity

Videotaped Deposition:

October 25, 2018

None

Attorneys: For Apple: Fish & Richardson

For Qualcomm: Quinn Emanuel Urquhart & Sullivan LLP / Cravath, Swaine & Moore LLP

For Compal Electronics, Inc., et. al: Gibson, Dunn & Crutcher LLP

Status: Case settled.

3/2017 – 1/2018 **Client: Kramer Levin Naftalis & Frankel, LLP (representing Finjan, Inc.)**

Case: Finjan, Inc. v. Blue Coat Systems, LLC

Civil Action No. 15-cv-03295-BLF-SVK

Location: UNITED STATES DISTRICT COURT FOR THE NORTHERN DISTRICT OF

CALIFORNIA SAN JOSE DIVISION – Hon. Beth L. Freeman

As a testifying expert, provided an opening technology tutorial at trial in this patent case involving internet security technology.

Expert Declaration:

March 29, 2017 Tutorial expert report on security technology.

Videotaped Deposition:

May 2, 2017

October 31 – November 2, 2017: Jury Trial Testimony

January 8-10, 2018: Jury Trial Testimony (retrial after mistrial):

Live Testimony on Network Security Technology Tutorial

Attorneys: For Plaintiff: Kramer Levin, Naftalis, & Frankel LLP

For Defendant: Morrison & Forrester & Quinn Emmanuel

Status: Jury award

1/2017 – 7/2017 **Client: Foster Pepper LLP (representing Dali Wireless)**

Case: Dali Wireless, Inc. (Petitioner) v. CommScope Technologies, LLC (Patent Owner)

Location: UNITED STATES PATENT AND TRADEMARK OFFICE BEFORE THE PATENT TRIAL AND APPEAL BOARD

Testifying expert in this patent case involving RF transport networks.

Expert Reports:

4-26-17 Declaration ISO petition for IPR

6-30-17 Declaration ISO Opening claim construction brief

Videotaped Deposition:

July 24, 2017

Status: Case closed

1/2017 – 6/2019 **Client: Dorsey & Whitney LLP (representing Dali Wireless)**

Case: CommScope Technologies, LLC (Plaintiff/Counterclaim Defendant) v. Dali Wireless, Inc. (Defendant/Counterclaim Plaintiff)

Civil Action No.: 3:16-cv-477

Location: UNITED STATES DISTRICT COURT FOR THE NORTHERN DISTRICT OF

TEXAS DALLAS DIVISION

– Hon. Barbara M. G. Lynn

Testifying expert in this patent case involving RF transport networks.

Expert Reports:

8-24-18 Expert Report regarding Invalidity of CommScope patents

8-24-18 Expert Report regarding Infringement of Dali Wireless patents

11-5-18 Expert Report regarding Validity of Dali Wireless patents

11-5-18 Expert Report regarding Non-Infringement of CommScope patents

1-9-19 Declaration ISO opposition to MSJ

1-18-19 Declaration ISO partial MSJ on Non-infringement and Invalidity

5-2-19 Declaration ISO Motion for Sanctions

Videotaped Deposition:

November 20, 2018

Live Testimony at Jury Trial:

June 10-13, 2019

Attorneys: For Plaintiff: Dorsey & Whitney, LLC

For Defendant: Carlson Caspers, P.A.

Status: Jury award.

11/2016 – 4/2019 **Client: Boies, Schiller & Flexner LLP (representing Apple Inc.)**

Case: Evolved Wireless, LLC v. Apple, Inc.

Civil Action No.: 1:15-cv-00542-SLR

Location: UNITED STATES DISTRICT COURT FOR THE DISTRICT OF DELAWARE – Hon. Sue L. Robinson

Testifying expert in this patent case involving LTE wireless networks.

Expert Reports:

11-06-17 Declaration ISO Summary Judgment of Validity

10-05-17 Declaration ISO Summary Judgment of Non-Infringment

10-03-17 Supplemental Expert Report on Non-Infringement

07-24-17 Supplemental Expert Report on Secondary Considerations of Non-Obviousness

6-26-17 Expert Report on Non-Infringement

5-22-17 Expert Report on Invalidity

Videotaped Deposition:

August 11, 2017

Live Testimony at Jury Trial:

March 29 - April 1, 2019

Attorneys: For Plaintiff: Boies, Schiller & Flexner LLP

For Defendant: Robins Kaplan LLP

Status: Jury verdict of non-infringement.

7/2016 – 4/2018 **Client: Jackson Walker LLP (representing D&M Holdings, Inc., *et. al.*)**

Case: Sonos, Inc., v. D&M Holdings, d/b/a The D+M Group, D&M Holdings U.S. Inc., and Denon Electronics (USA), LLC

Civil Action No.: 16-0141-RGA

D&M Holdings Inc., d/b/a The D+M Group, D&M Holdings U.S. Inc. v. Sonos, Inc.

Location: UNITED STATES DISTRICT COURT FOR THE DISTRICT OF DELAWARE – Hon. Richard G. Andrews

Testifying expert in this patent case involving wireless speaker networks.

Expert Testimony:

9-11-17 Expert Report on Infringement

6-29-22 Remote Videotaped Deposition

Attorneys: For Plaintiff: Jackson Walker LLP

For Defendant: Potter Anderson & Corroon LLP

Status: Case settled

7/2016 – 1/2018 **Client: Kramer Levin Naftalis & Frankel, LLP (representing Finjan, Inc.)**

Case: Palo Alto Networks, Inc. (Petitioner) v. Finjan, Inc. (Patent Owner)

Case IPR2015-02001, Case IPR2016-00157. US Patent No. 8,225,408 B2

Case IPR2015-01974

Location: UNITED STATES PATENT AND TRADEMARK OFFICE BEFORE THE PATENT TRIAL AND APPEAL BOARD

Testifying expert in this patent case involving wireless speaker networks.

Expert Declaration:

8-9-16 Expert Declaration, Patent 7,647,633

8-9-16 Expert Declaration, Patent 8,225,408

8-30-16 Supplemental Expert Declaration, 7,647,633

Status: Case settled

5/2016 – 7/2018 **Client: (Winston & Strawn LLP representing Atlantic Broadband Group, LLC, et. al.)**

Case: ChanBond LLC v. Atlantic Broadband Group, LLC, et. al.

Civil Action No: 15-842-RGA, 15-843-RGA, 15-844-RGA, , 15-845-RGA, , 15-846-RGA, , 15-847-RGA, , 15-848-RGA, , 15-849-RGA, , 15-850-RGA, , 15-851-RGA, , 15-852-RGA, , 15-853-RGA, , 15-854-RGA

Location: UNITED STATES DISTRICT COURT FOR THE DISTRICT OF DELAWARE – Hon. Richard G. Andrews

Testifying expert regarding digital cable technology.

Expert Report:

10-24-17 Expert Report on Invalidity

Videotaped Deposition:

None

Attorneys: For Plaintiff: Bayard, P.A.

For Defendant: Winston & Strawn LLP

Status: Case settled

5/2016 – 11/2019 **Client: (Torys LLP representing Telus, Bell, and Rogers)**

Case: Wi-LAN Inc. v Telus Communications Company, Rogers Communications Canada Inc., and Bell Mobility Inc.

Court File No. T-301-16; Court File No. T-303-16; Court File No. T-304-16

Location: CANADIAN FEDERAL COURT – Hon. Mandy Aylen

Testifying expert regarding LTE technology.

Expert Report:

June 14, 2019 Expert Report regarding invalidity

Videotaped Deposition:

None

Attorneys: For Plaintiff: Torys LLP

For Defendant:

Status: Case settled

12/2015 – 4/2016 **Client: Kramer Levin Naftalis & Frankel, LLP (representing Acceleration Bay, LLC.)**

Case: Activision Blizzard, Inc., Electronic Arts Inc., Take-Two Interactive Software, Inc., 2K Sports, Inc., Rockstar Games, Inc., and Bungie, Inc., Petitioner v. Acceleration Bay, LLC, Patent Owner.

Case IPR2015-01951, Case IPR2015-01953, Case IPR2015-01964, Case IPR2015-01970, Case IPR2015-01996, Case IPR2016-00724, Case IPR2016-00747

Location: UNITED STATES PATENT AND TRADEMARK OFFICE BEFORE THE PATENT TRIAL AND APPEAL BOARD

Testifying expert in this IPR patent case involving internet data broadcasting.

Expert Declaration:

January 4, 2017 Supplemental Declaration ISO Patent Owner's Response -- Case IPR2016-00724

January 4, 2017 Supplemental Declaration ISO Patent Owner's Response -- Case IPR2016-00747

December 7, 2016 Declaration ISO Patent Owner's Response – Case IPR2016-00724; Secondary Considerations of Non-Obviousness

December 7, 2016 Declaration ISO Patent Owner's Response – Case IPR2016-00747; Secondary Considerations of Non-Obviousness

July 17, 2016 Declaration ISO Patent Owner's Response – Patent 6,714,966; Secondary Considerations of Non-Obviousness

July 17, 2016 Declaration ISO Patent Owner's Response – Patent 6,829,634; Secondary Considerations of Non-Obviousness

July 17, 2016 Declaration ISO Patent Owner's Response – Patent 6,701,344; Secondary Considerations of Non-Obviousness

Videotaped Deposition:

February 7, 2017 and February 8, 2017

Attorneys: For Plaintiff: Kramer Levin, Naftalis, & Frankel LLP

For Defendant: Winston & Strawn

Status: Cased closed

4/2016 – Present **Client: Kramer Levin Naftalis & Frankel, LLP (representing Acceleration Bay, LLC.)**

Case: Acceleration Bay, LLC v Activision Blizzard, Inc., Electronic Arts Inc., Take-Two Interactive Software, Inc.

Civil Action No.: 14-453 (RGA), 16-454 (RGA), 16-455 (RGA)

Location: UNITED STATES DISTRICT COURT FOR THE DISTRICT OF DELAWARE – Hon. Richard G. Andrews

Testifying expert in this patent case involving internet data broadcasting.

Expert Declaration:

September 24, 2017: Expert Report Regarding Technology Benefits of the Asserted Patents

Videotaped Deposition: January 4, 2018

July 17, 2018: Reply Report Regarding Technology Benefits of the Asserted Patents

April 29 – May 3, 2024 Live Tutorial Testimony at Trial about benefits of Asserted Patents

Attorneys: For Plaintiff: Kramer Levin, Naftalis, & Frankel LLP

For Defendant: DLA Piper

Status: Jury Award

12/2015 – 9/2016 **Client: Kramer Levin Naftalis & Frankel, LLP (representing Finjan, Inc.)**

Case: Finjan, Inc. v. Sophos, Inc.

Civil Action No. 3:14-cv-01197-WHO

Location: UNITED STATES DISTRICT COURT FOR THE NORTHERN DISTRICT OF CALIFORNIA SAN FRANCISCO DIVISION – Hon. William H. Orrick

As a testifying expert, provided a technology tutorial in this patent case involving internet security technology.

Expert Declaration:

December 21, 2015 Tutorial expert report on network security technology.

Videotaped Deposition:

February 22, 2016

September 5 – 9, 2016 Jury Trial:

Live Testimony at Jury Trial regarding tutorial on network security

Attorneys: For Plaintiff: Kramer Levin, Naftalis, & Frankel LLP

For Defendant: DLA Piper

Status: Jury Trial

9/2015 – 2/2016 **Client: Brinks Gilson & Lione (representing LifeWatch Services, Inc., and Card Guard Scientific Survival, Ltd.)**

Case: Card Guard Scientific Survival Ltd.

Reexam Control No. 12/706,541

Location: UNITED STATES PATENT AND TRADEMARK OFFICE

Provided testimony in this Patent Office re-examination appeal.

Expert Declaration:

November 13, 2015 Declaration under 37 C.F.R §1.132.

February 13, 2016 Declaration ISO petition for IPR.

Attorneys: For Plaintiff: Brinks Gilson & Lione

Status: Re-examination appeal decision invalidated the patent.

9/2015 – 1/2017 **Client: Kramer Levin Naftalis & Frankel, LLP (representing Finjan, Inc.)**

Case: Finjan, Inc. v. Proofpoint, Inc. and Armorize Technologies, Inc.

Civil Action No. 13:cv-03999-BLF

Location: UNITED STATES DISTRICT COURT FOR THE NORTHERN DISTRICT OF CALIFORNIA SAN JOSE DIVISION – Hon. Howard R. Lloyd, Hon. Haywood S. Gilliam, Jr.

As a testifying expert, provided an opening technology tutorial report in this patent case involving internet security technology.

Expert Declaration:

October 7, 2015 Tutorial expert report on network security technology.

Videotaped Deposition:

November 6, 2015

Attorneys: For Plaintiff: Kramer Levin, Naftalis, & Frankel LLP

For Defendant: Quinn Emanuel

Status: Case settled

8/2015 – 12/2015 **Client: Brinks Gilson LLP (representing ZTE Corporation and ZTE (USA), Inc.)**

Case: Inter-System Handover of a Mobile Terminal Operable with a First and a Second Radio Access Network

ZTE v. Vringo Infrastructure, Inc.

Location: UNITED STATES PATENT AND TRADEMARK OFFICE BEFORE THE PATENT TRIAL AND APPEAL BOARD

Testifying expert in this IPR proceeding involving 3GPP cellular technology.

Expert Declarations:

08-28-15 Declaration ISO Petition for Inter Partes Review of U. S. Patent No. 7,126,940

09-04-15 Declaration ISO Petition for Inter Partes Review of U. S. Patent No. 7,242,943

09-04-15 Declaration ISO Petition for Inter Partes Review of U. S. Patent No. 7,558,283

09-04-15 Declaration ISO Petition for Inter Partes Review of U. S. Patent No. 8,812,000

09-04-15 Declaration ISO Petition for Inter Partes Review of U. S. Patent No. 7,724,720

10-12-15 Declaration ISO Petition for Inter Partes Review of U. S. Patent No. 7,242,933

Videotaped Deposition:

None

Attorneys: For Plaintiff:

For Defendant: Brinks Gilson, LLP

Status: Case settled.

11/2014 – 3/2024 **Client: Fish & Richardson (representing Regents of the University of Minnesota)**

Case: Regents of the University of Minnesota v. AT&T Mobility, LLC, Sprint Solutions, Inc., T-Mobile USA, Inc., Cellco Partnership d/b/a Verizon Wireless

Civil Action No. 14-cv-4666

Location: UNITED STATES DISTRICT COURT FOR THE DISTRICT OF MINNESOTA – Hon. Tony N. Leung

Testifying expert on 3GPP error correction coding, precoding, and modulation.

February 10, 2023 Expert Report regarding Objective Indicia relating to Validity

May 12, 2023: Expert Deposition

April 14, 2023: Rebuttal Expert Report regarding Validity

September 25, 2024 Supplemental Rebuttal Expert Report regarding Validity

October 2, 2024 Expert Deposition

Attorneys: For Plaintiff: Fish & Richardson

For Defendant:

Status: Case settled

10/2014 – 2/2015 **Client: Alston & Bird (representing Microsoft Corporation)**

Case: Microsoft Corporation. v. IPR Licensing, Inc.

Location: UNITED STATES PATENT AND TRADEMARK OFFICE BEFORE THE PATENT TRIAL AND APPEAL BOARD

Testifying expert in this IPR proceeding involving cellular technology.

Expert Declarations:

October 16, 2014 Supplemental Declaration ISO Petition for Inter Partes Review of U. S. Patent No. 8,380,244

September 25, 2024 Supplemental Rebuttal Expert Report regarding Validity

Attorneys: For Plaintiff: Fish & Richardson LLP

For Defendant:

Status: Case settled

9/2014 – 4/2015 **Client: Reed & Scardino, LLP (representing Mobile Telecommunications**

Technologies, LLC)

Case: Mobile Telecommunications Technologies LLC v. Amazon.com, Inc.

Civil Action No. 2:13-CV-883-JRG-RSP

Location: UNITED STATES DISTRICT COURT FOR THE EASTERN DISTRICT OF TEXAS MARSHALL DIVISION – Hon. Roy S. Payne

Testifying expert in this patent case involving package delivery notification systems and reliable delivery of wireless messages.

Expert Reports:

4-06-15 Second Supplemental Expert Report on Infringement

2-10-15 Expert Report on Infringement

2-24-15 Supplemental Expert Report on Infringement

Videotaped Deposition:

2-25-15

Declaration:

3-20-15 Declaration ISO Response to Opposition Motion

Attorneys: For Plaintiff: Reed & Scardino LLP

For Defendant: Greenberg Traurig LLP

Status: Case settled

5/2014 – 7/2015 **Client: Kramer Levin Naftalis & Frankel, LLP (representing Finjan, Inc.)**

Case: Finjan, Inc. v. Blue Coat Systems, Inc.

Civil Action No. 3:13-cv-03999-BLF

Location: UNITED STATES DISTRICT COURT FOR THE NORTHERN DISTRICT OF CALIFORNIA SAN JOSE DIVISION – Hon. Beth L. Freeman

As a testifying expert, provided an opening technology tutorial at trial in this patent case involving internet security technology.

Expert Declaration:

January 12, 2015 Tutorial expert report on security technology.

Videotaped Deposition:

March 18, 2015

Live Jury Trial Testimony: July 20, 2015.

Live Bench Trial on Laches Testimony: September 8, 2015

Attorneys: For Plaintiff: Kramer Levin, Naftalis, & Frankel LLP

For Defendant: Wilson Sonsini

Status: Jury award.

4/2014 – 12/2014 **Client: Reed & Scardino, LLP (representing Mobile Telecommunications Technologies, LLC)**

Case: Mobile Telecommunications Technologies LLC v. United Parcel Service, Inc.

Civil Action No. 1:12-cv-03222-AT

Location: UNITED STATES DISTRICT COURT FOR THE NORTHERN DISTRICT OF GEORGIA ATLANTA DIVISION – Hon. Amy Totenberg

Testifying expert in this patent case involving package delivery notification systems.

Expert Reports:

7-3-14 Opening Expert Report regarding Infringement

8-11-14 Rebuttal Expert Report regarding Infringement

Videotaped Depositions:

10-7-14

Declaration:

11-24-14 Declaration ISO Response to MSJ

Attorneys: For Plaintiff: Reed & Scardino LLP

For Defendant: Alston & Bird LLP

Status: Case settled.

12/2013 – 9/2015 **Client: Brinks Gilson & Lione LLP (representing ZTE Corp, and ZTE (USA), Inc.)**

Case: ZTE Corporation and ZTE (USA) Inc. v. InterDigital Technology Corporation

Location: UNITED STATES PATENT AND TRADEMARK OFFICE BEFORE THE PATENT TRIAL AND APPEAL BOARD

Testifying expert in this IPR proceeding involving cellular technology.

Expert Declarations:

3-21-14 Declaration in support of the Petition for Inter Partes Review of U. S. Patent No. 8,380,244

Attorneys: For Plaintiff: Brinks Gilson & Lione

For Defendant: Latham & Watkins, LLP

Status: IPR Hearing before PTAB: All disputed claims are unpatentable.

12/2013 – 4/2014 **Client: Kramer Levin Naftalis & Frankel LLP (representing Sirius XM Radio Inc.)**

Case: Catch a Wave Technologies, Inc. v. Sirius XM Radio Inc.

Case No. 3:12-cv-05791-WHA

Location: UNITED STATES DISTRICT COURT FOR THE NORTHERN DISTRICT OF CALIFORNIA SAN FRANCISCO DIVISION – Hon. William Alsup

Testifying expert in this patent case involving satellite radio systems.

Expert Reports:

2-14-2014 Expert Report regarding non-infringement

Attorneys: For Plaintiff: Freitas Tseng & Kaufman LLP

For Defendant: Kramer Levin LLP

Status: Case settled

2/2013 – 7/2016 **Client: Reed & Scardino, LLP (representing Mobile Telecommunications Technologies, LLC)**

Case: Mobile Telecommunications Technologies LLC v. BlackBerry Corporation.

Civil Action No. 3:12-cv-1652-M

Location: UNITED STATES DISTRICT COURT FOR THE NORTHERN DISTRICT OF TEXAS DALLAS DIVISION – Hon. Barbara M. G. Lynn

Testifying expert in this patent case involving package delivery notification systems.

Expert Reports:

9-3-15 Expert Report on Infringement

Videotaped Depositions:

November 18, 2015

Live Testimony at Jury Trial: July 13, 2016.

Attorneys: For Plaintiff: Baker Botts, LLP

For Defendant: Reed & Scardino LLP

Status: Jury verdict of non-infringement.

9/2013 – 1/2014 **Client: Reed & Scardino, LLP (representing Mobile Telecommunications Technologies, LLC)**

Case: Mobile Telecommunications Technologies, LLC v Clearwire Corporation

Civil Action No. 2:12-CV-308

Location: UNITED STATES DISTRICT COURT FOR THE EASTERN DISTRICT OF TEXAS MARSHALL DIVISION – Hon. Roy S. Payne

Testifying expert in this patent case involving wireless networking signals.

Expert Reports:

11-11-13 Rebuttal report regarding validity

Videotaped Depositions:

12-5-13

Declarations:

1-23-14 Declaration before the Patent Trial and Appeal Board in Case IPR2013-00306

Attorneys: For Plaintiff: Reed & Scardino LLP

For Defendant: Shook, Hardy & Bacon, LLP

Status: Case settled

10/2013 – 5/2015 **Client: Foley & Lardner, LLP (representing Motorola Mobility, LLC)**

Case: University of Florida Research Foundation Inc., and Rapid Mobile Technologies, Inc. v Motorola Mobility, LLC.

Case No. 13-cv-61120-KMM-EGT

Location: UNITED STATES DISTRICT COURT FOR THE SOUTHERN DISTRICT OF FLORIDA FORT LAUDERDALE DIVISION – Hon. K. Michael Moore, Magistrate Judge: Hon. Edwin G. Torres

Testifying expert in this patent case involving mobile device testing systems.

Expert Reports:

None.

Declarations:

11-21-13 Declaration ISO Motorola's Responsive Claim Construction Brief

Attorneys: For Plaintiff: Meltzer & Meksraitis

For Defendant: Foley & Lardner LLP

Status: Case settled

7/2013 – 6/2015 **Client: WilmerHale (representing Broadcom)**

Case: Inter Partes Review of US Patent 6,424,625; 6,772,215; and 6,466,568 owned by Ericsson

Docket No. 0111168-0240

Location: UNITED STATES PATENT AND TRADEMARK OFFICE BEFORE THE PATENT TRIAL AND APPEAL BOARD

Testifying expert in this Inter Partes Review regarding ARQ mechanisms.

Expert Declarations:

9-19-13 Declaration regarding US Patent 6,772,215

9-19-13 Declaration regarding US Patent 6,466,568

9-29-13 Declaration regarding US Patent 6,424,625

Videotaped Deposition:

5-29-14, and 5-30-14

Attorneys: For Plaintiff: Meltzer & Mathis

For Defendant: Wilmer Cutler Pickering Hale and Dorr LLP

Status: IPR Petition granted. All claims invalidated

4/2013 – 4/2015 **Client: Kilpatrick Townsend & Stockton LLP (representing Google Inc. and Motorola Mobility LLC)**

Case: Fujifilm Corporation v. Motorola Mobility LLC

Case No. 3:12-cv-03587 WHO

Location: UNITED STATES DISTRICT COURT FOR THE NORTHERN DISTRICT OF CALIFORNIA SAN FRANCISCO DIVISION – Hon. Richard Seeborg

Testifying expert in this patent case involving smartphone technology and video codecs.

Expert Declarations:

4-23-14 Declaration ISO Motion for Protective Order

12-9-14 Declaration ISO MSJ

Expert Reports:

10-3-14 Opening Expert Report Regarding Invalidity

10-31-14 Rebuttal Expert Report on non-infringement

10-31-14 Appendix A to Rebuttal Report of Dr. Alan Bovik

Videotaped Deposition:

11-19-14, and 11-20-14

Trial Testimony:

April 28, 2015 Non-infringement and invalidity of ’970 Patent

Attorneys: For Plaintiff: Morgan, Lewis & Bockius LLP

For Defendant: Kilpatrick Townsend & Stockton LLP

Status: Jury verdict: ’970 Patent claims not infringed and invalid.

2/2013 – 10/2013 **Client: Seyfarth Shaw LLP (representing Motorola Mobility LLC)**

Case: University of Florida Research Foundation, Inc. and Rapid Mobile Technologies, Inc. v. Motorola Mobility LLC

Civil Action No. 13-cv-61120-KMM-EGT

Location: UNITED STATES DISTRICT COURT FOR THE SOUTHERN DISTRICT OF FLORIDA – Hon. K. Michael Moore, Magistrate Judge: Hon. Edwin G. Torres

Testifying expert in this employment law case involving mobile device testing systems.

Expert Reports:

3-1-13 Expert Report regarding Non-Infringement

4-1-13 Declaration in Opposition to Plaintiff’s MSJ

Attorneys: For Plaintiff: Meltzer & Mathis

For Defendant: Seyfarth Shaw LLP

Status: Case settled

5/2012 – 4/2013 **Client: Paul Hastings LLP (representing Apple, Inc.)**

Case: SmartPhone Technologies, LLC v Research in Motion Corporation, et. al.

Case No. 6:10-cv-00074

Location: UNITED STATES DISTRICT COURT FOR THE EASTERN DISTRICT OF TEXAS TYLER DIVISION – Hon. John D. Love

Testifying expert in this patent case involving 3GPP technology.

Expert Reports:

12-31-12 Appendix A to Rebuttal Expert Report of Dr. David Wilson

3-13-13 Appendix A to Supplemental Expert Report of Dr. David Wilson

Attorneys: For Plaintiff: Mintz Levin Cohn Ferris Glovsky and Popeo PC

For Defendant: Paul Hastings LLP

Status: Case settled

8/2012 – 9/2013 **Client: Reed & Scardino, LLP (representing EON Corp. IP Holdings, LLC)**

Case: EON Corp. IP Holdings, LLC v. SKYGUARD, LLC et. al.

Case No. 6:11-cv-00015-LED

Location: UNITED STATES DISTRICT COURT FOR THE EASTERN DISTRICT OF TEXAS TYLER DIVISION – Hon. John D. Love

Testifying expert in this patent case involving RF technology for WiFi networking.

Expert Reports:

2-15-13 Expert Report regarding Infringement

Videotaped Deposition:

4-09-13

Attorneys: For Plaintiff: Reed & Scardino, LLP

For Defendant: K&L GATES LLP

Status: Case settled

Client: Reed & Scardino LLP (representing Eon Corp. IP Holdings)

5/2012 – 6/2014

Case: Eon Corp. IP Holdings, LLC v. Landis+Gyr, Inc., et. al.

Case No. 6:09-cv-00317-LED-JDL

Location: UNITED STATES DISTRICT COURT EASTERN DISTRICT OF TEXAS TYLER DIVISION – Hon. John D. Love

Testifying expert in this patent case involving two-way wireless networks, before Judge Love.

Expert Report:

7-8-13 Expert Report regarding Infringement by Silver Spring Networks, Inc.

7-8-13 Expert Report regarding Infringement by Itron, Inc.

Videotaped Deposition: September 12, 2013

Live Testimony at Jury Trial: June 2, 2014 – June 6-2014

Attorneys: For Plaintiff: Reed & Scardino LLP

For Defendant: Dentons, LLP

Status: Jury award. All patents found valid and infringed.

3/2012 – 3/2014 **Client: Perkins Coie (representing Intel Corporation)**

Case: Stragent LLC, et. al. v. Intel Corp.,

Case No. 6:11-cv-421-LED (E.D. Tex.)

Location: UNITED STATES DISTRICT COURT FOR THE EASTERN DISTRICT OF TEXAS TYLER DIVISION – Hon. Timothy Dyk, Hon. John D. Love

Testifying expert in this patent case involving the use of error detection technology in computer networking, before Judge Dyk.

Expert Reports:

08-23-13 Expert Report regarding Invalidity

09-23-13 Expert Report regarding Non-Infringement

Videotaped Deposition:

10-08-13, and 10-09-13

Jury trial testimony:

3-13-2014 Live trial testimony on non-infringement and invalidity before Judge Timothy Dyk

Attorneys: For Plaintiff: Nelson, Bumgardner & Casto

For Defendant: Perkins Coie

Status: Jury verdict for non-infringement and invalidity

2/2012 – 09/2015 **Client: Dewey & LeBoeuf LLP (representing Harris Corporation)**

Case: Harris Corporation v. Ruckus Wireless, Inc.

Case No. 6:11-cv-00618-CEM-CRS

Location: UNITED STATES DISTRICT COURT FOR THE MIDDLE DISTRICT OF FLORIDA ORLANDO DIVISION – Hon. Charlene Edwards Honeywell

Testifying expert in this patent case involving RF technology for WiFi networking.

Expert Reports:

3-5-12 Expert Report regarding Infringement

3-6-12 Supplemental Expert Report regarding Infringement

4-6-12 Expert Report regarding Validity

Declarations:

5-30-12 Declaration ISO Claim Construction

6-18-12 Declaration ISO Markman Motion

1-23-15 Declaration ISO Responsive Markman Brief

3-6-15 Supplemental Expert Report regarding Infringement

4-3-15 Rebuttal Expert Report regarding Validity

Videotaped Deposition:

4-30-12

Attorneys: For Plaintiff: Dewey & LeBeouf LLP

For Defendant: Lewis and Roca LLP

Status: Case settled

2/2012 – 2/2013 **Client: Common-Interest-Group (representing Nokia, Huawei, ZTE)**

Case: InterDigital Communications LLC, et. al. v. Huawei Tech Co., LTD., et. al.

Certain Wireless Devices With 3G Capabilities and Components Thereof

U.S. Int'l Trade Commission Inv. No. 337-TA-800

Location: UNITED STATES INTERNATIONAL TRADE COMMISSION –

Administrative Law Judge Hon. David P. Shaw and Administrative Law Judge Hon. Theodore R. Essex

Testifying expert in this patent case involving 3G wireless, WiFi, and WCDMA technology.

Expert Reports:

11-30-12 Expert Report regarding Non-infringement

7-31-12 Expert Report regarding Invalidity

11-19-10 Rebuttal Expert Report regarding Validity

12-6-10 Supplemental Expert Report regarding Infringement

Videotaped Deposition:

12-14-12, 12-15-12

ITC Trial testimony:

2-6 through 2-15/13 Non-infringement and Invalidity witness statements, live testimony

Attorneys: For Plaintiff: Latham & Watkins, LLP

For Defendant: Alston & Bird, Covington & Burling, Brinks Hofer

Status: ITC hearing verdict: All patents not infringed and invalid

9/2010 – 4/2011 **Client: Reed & Scardino LLP (representing Eon Corp. IP Holdings)**

Case: Eon Corp. IP Holdings, LLC v. Sensus USA, Inc., et. al.

Case No. 6:09-cv-00116-LED-JDL

Location: UNITED STATES DISTRICT COURT EASTERN DISTRICT OF TEXAS TYLER DIVISION – Hon. John D. Love

Testifying expert in this patent case involving two-way wireless networks

Expert Report:

10-22-10 Expert Report regarding Infringement (Sensus USA, Inc)

11-7-10 Expert Report regarding Infringement (Bell Industries)

11-19-10 Rebuttal Expert Report regarding Validity

12-6-10 Supplemental Expert Report regarding Infringement

Declaration:

12-28-10, 1-18-11

Videotaped Deposition:

12-8-10, 2-3-11

Attorneys: For Plaintiff: Reed & Scardino LLP

For Defendant: Jones Day

Status: Case settled

10/2009 – 2/2010 **Client: White & Case LLP (representing Marvell)**

Case: Marvell Semiconductor, Inc., et. al. v. Commonwealth Scientific Industrial Research Organisation

Case No. 6:07-CV-204 (LED)

Location: UNITED STATES DISTRICT COURT EASTERN DISTRICT OF TEXAS TYLER DIVISION – Hon. Leonard Davis

Testifying expert in this patent case involving wireless LAN protocols.

Expert Report:

11-24-09 Rebuttal Expert Report

Videotaped Deposition:

01-07-10

Attorneys: For Plaintiff: White & Case LLP

For Defendant: Townsend and Townsend and Crew LLP

Status: Case settled

9/2009 – 2/2010 **Client: Perkins Coie Brown & Bain PA (representing Intel)**

Case: Saxon Innovations, LLC v. Apple, Inc., et. al.

Case No. 6:08-cv-00265-LED

Location: UNITED STATES DISTRICT COURT FOR THE EASTERN DISTRICT OF TEXAS TYLER DIVISION – Hon. John D. Love

Testifying expert in this patent case involving wireless technology.

Declarations:

12-04-09 Declaration Regarding Claim Construction

Videotaped Deposition:

01-19-10

Attorneys: For Plaintiff: Susman Godfrey LLP

For Defendant: Perkins Coie Brown & Bain LLP

Status: Case settled

8/2008 – 10/2009 **Client: Reed & Scardino LLP (representing Eon Corp. IP Holdings)**

Case: Eon Corp. IP Holdings, LLC v. Verizon Clinton Center Drive Corp., et. al.

Case No. 6:08-cv-00385

Location: UNITED STATES DISTRICT COURT FOR THE EASTERN DISTRICT OF TEXAS TYLER DIVISION – Hon. John D. Love

Testifying expert in this patent case involving two-way wireless networks

Expert Report:

06-22-10 Expert Report
08-16-10 Supplemental Expert Report

Videotaped Depositions:
08-18-10, 08-26-10

Attorneys: For Plaintiff: Reed & Scardino LLP

For Defendant: Simpson Thacher & Bartlett LLP

Status: Case settled

4/2008 – 3/2009 **Client: McDermott, Will & Emery LLP (representing GE Licensing)**

Case: CIF Licensing, LLC d/b/a GE Licensing v. Agere Systems, Inc.

Case No. 07-170 (JJF)

Location: UNITED STATES DISTRICT COURT FOR THE DISTRICT OF DELAWARE – Hon. Joseph. J. Farnan, Jr.

Testifying expert in this patent case involving modem technology.

Expert Report:

09-05-08 Rebuttal Expert Report

Non-videotaped Depositions:
9-24-08, 9-26-08

Jury trial testimony:

2-04-09

Attorneys: For Plaintiff: McDermott, Will & Emery LLP

For Defendant: Townsend and Townsend and Crew LLP

Status: Jury award. 2 patents infringed and valid, remaining 2 patents non-infringed

2/2008 – 5/2010, 2/2011 – 4/2011 **Client: Simpson Thacher & Bartlett LLP (representing Cisco Systems, Inc.)**

Case: Commil USA, LLC v. Cisco Systems, Inc., et. al.

Case No. 2:07-CV-341-DF-CE

Location: UNITED STATES DISTRICT COURT EASTERN DISTRICT OF TEXAS MARSHALL DIVISION – Hon. Charles Everingham IV

Testifying expert on invalidity regarding short range communication protocols.

Opening Expert Report

12-23-09

Videotaped Depositions:

02-09-10

Attorneys: For Plaintiff: Sayles Werbner

For Defendant: Simpson Thacher & Bartlett LLP

Status: Jury award for original trial and retrial: patents found valid and infringed.

6/2007 – 4/2009 **Client: Common Interest Group of Co-Defendants**
11/2010 – 4/2012 **Client: Common Interest Group of Co-Defendants**

Case: Commonwealth Scientific and Industrial Research Organisation v. Toshiba America Information Systems, Inc., et. al.

Case No. 6:06-cv-00550-LED

Case No. 6:09-CV-0399 (LED)

Location: UNITED STATES DISTRICT COURT EASTERN DISTRICT OF TEXAS TYLER DIVISION – Hon. Leonard Davis

Testifying expert in this patent case involving wireless LAN technology.

Declarations:

06-05-08 Regarding claim construction

12-17-08 Supporting opposition to summary judgment

04-05-09 Supporting motion for reconsideration

02-24-12 Supporting opposition to summary judgment

Expert Reports:

10-08-08 Rebuttal Expert Reports- Re: TI Chips, Re: Marvell Chips, Re: Airgo Chips, Re: Broadcom Chips, Re: Conexant Chips, Re: Ralink Chips, Re: Atheros Chips

01-27-12 Rebuttal Expert Reports- Re: TI Chips, Re: Broadcom Chips, Re: Ralink Chips, Re: Atheros Chips

Videotaped Depositions:
11-1-08, 11-2-08, 02-14-12

Attorneys: For Plaintiff: Townsend & Townsend LLP

For Defendant: Keker & Van Nest, LLP

Status: Jury trial: patents found valid and infringed.

10/2006 – 8/2009 **Client: Keker & Van Nest (representing Comcast Corporation)**

Case: Rembrandt Technologies, Inc. v. Comcast Corporation

Case No. 2-05-CV-000443 (TJW)

Location: UNITED STATES DISTRICT COURT EASTERN DISTRICT OF TEXAS MARSHALL DIVISION – Hon. T. John Ward

Testifying expert in this patent case involving physical layer and data link layer communication protocols for cable networks.

Declaration:

01-10-07 Support of Claim Construction Brief

Videotaped Deposition:

12-22-06 Regarding claim construction opinions

Attorneys: For Plaintiff: McKool Smith

For Defendant: Keker & Van Nest

Status: Case settled

3/2007 – 5/2007 **Client: Niro, Scavone, Haller and Niro (representing MLR, LLC)**

Case: MLR, LLC v. Kyocera Wireless Corporation and Novatel Wireless, Inc.

Case No. 05-CV-0935 B (AJB)

Location: UNITED STATES DISTRICT COURT SOUTHERN DISTRICT OF CALIFORNIA

Testifying expert in this patent case involving cellular phone technology.

Expert Report:

04-20-07 Expert Report regarding infringement

Attorneys: For Plaintiff: Niro, Scavone, Haller, and Niro

For Defendant: Hogan & Hartson, LLP

Status: Case settled

6/2006 – 10/2006 **Client: Thompson & Knight (representing Ericsson, Inc.)**

Case: Fenner Investments, Ltd., v. Juniper Networks, Inc. et. al.
Case No. 2:05–CV–05 JDL

Location: UNITED STATES DISTRICT COURT EASTERN DISTRICT OF TEXAS
MARSHALL DIVISION

Testifying expert in this patent case involving wireless communications services.

Expert report regarding infringement and invalidity

5-23-06 Rebuttal expert report regarding infringement and invalidity

Attorneys: For Plaintiff: Fulbright & Jaworski

For Defendant Ericsson: Thompson & Knight

Status: Case settled

12/2003 – 5/2006 **Client: Howrey LLP/ Winston & Strawn LLP (representing McKesson Information Solutions, Inc.)**

Case: McKesson Information Solutions, Inc. vs. Bridge Medical, Inc.
Case No. CIV S-02-2669 FCD KJM

Location: UNITED STATES DISTRICT COURT EASTERN DISTRICT OF
CALIFORNIA – Hon. Peter A. Nowinski

Testifying expert in this patent case involving a patient on a patient identification and verification system that incorporates wireless technology.

Inequitable Conduct Trial live testimony:
5-04-06

Markman Hearing live testimony:
6-29/30-05

Videotaped Depositions:

2-14-04, 6-3-05

Declarations:
12-1-03 Dec. in support of MISI's Opening/Opposition re Claim Construction
12-24-04 Dec. in support of MISI's Motion for Preliminary Injunction
3-1-04 Dec. in support of Claim Construction
6-29-04 Dec. re meaning of "Communication"
7/15/05 Dec. in support of MISI's Opposition to Bridge's Motion for Summary Judgment

Attorneys: For Defendant: Morrison & Foerster

For Plaintiff: Howrey Simon, Winston & Strawn, Morgan Lewis

Status: Bench trial on inequitable conduct: Verdict found inequitable conduct.

07/2003–02/2006 **Client: Heller Ehrman LLP (representing Texas Instruments, Inc.)**

Case: Texas Instruments, Inc. and Stanford University vs. GlobespanVirata, Inc.

Provided discovery of evidence used at trial, concerning the structure and operation of Globespan's ADSL products, and supported litigators in depositions of Globespan engineers.

Attorneys: For Plaintiff: Heller Ehrman

For Defendant: Covington & Burling, LLP

Status: Jury award.

Patents

Patent Number	Date Issued	Title
11,748,764	September 5, 2023	Light-based Data Entry for Personal Inventory and Product Support System
10,332,121	June 25, 2019	Light-based Data Entry for Personal Inventory and Product Support System
9,978,037	May 22, 2018	Personal inventory and product support system
8,995,996	March 31, 2015	Methods and apparatus for performance optimization of heterogeneous wireless system communities
8,935,580	January 13, 2015	Multimedia-aware quality-of-service and error correction provisioning
8,468,426	June 18, 2013	Multimedia-aware quality-of-service and error correction provisioning

8,189,538	May 29, 2012	Reconfiguration of a communication system
8,144,640	March 27, 2012	Location tracking in a wireless communication system using power levels of packets received by repeaters
8,064,380	November 22, 2011	Reconfiguration of a communication system
8,027,637	September 27, 2011	Single frequency wireless communication system
7,957,741	June 7, 2011	Token-based receiver diversity
7,876,704	January 25, 2011	Tunneling protocols for wireless communications
7,689,210	March 30, 2010	Plug-n-playable wireless communication system
7,672,274	March 2, 2010	Mobility support via routing
7,668,542	February 23, 2010	Token-based receiver diversity
7,515,557	Apr 7, 2009	Reconfiguration of a communication system
7,236,470	Jun 26, 2007	Tracking multiple interface connections by mobile stations
7,149,196	Dec 12, 2006	Location tracking in a wireless communication system using power levels of packets received by repeater
6,965,769	Nov 15, 2005	Testing Center
6,862,448	Mar 1, 2005	Token-based receiver diversity
6,788,658	Sep 7, 2004	Wireless communication system architecture having split MAC layer
6,760,318	Jul 6, 2004	Receiver diversity in a communication system
6,557,134	Apr 29, 2003	ARQ method for wireless communication
6,259,911	Jul 10, 2001	Network operations center hardware and software design

Education

Year	**College/University**	**Degree**
1993	Stanford University	PhD, Electrical Engineering Thesis: "Trellis Coding for Multi-Level, Partial-Response Continuous Phase Modulation with Precoding"
1988	Stanford University	MS, Electrical Engineering
1985	Rensselaer Polytechnic Institute	BS, Computer and Systems Engineering

Publications

Goldhamer, M., Grandblaise, D., Bims, H., Feng, S., Piggin, P., Sydor, J., and Wu, X. "Coexistence between 802.16 Systems Operating in Shared Bands", *Radio Resource Management in WiMAX,* John Wiley & Sons, 2009.

Bims, Harry. "Surveying the Wireless LANdscape. Or Why Large Wi-Fi Networks Require Good Planning." Xchange. [Online] Available http://www.xchangemag.com/articles/391supsys1.html, September 1, 2003.

Bims, Harry. "Building Voice-Ready Wireless LANs" Wireless Week. [Online] Available http://www.wirelessweek.com/article/CA319429.html?spacedesc=Departments, September 1, 2003.

Bims, Harry. "Enabling Voice over WLANs". White Paper. [Online] Available. **http://airflownetworks.com/solutions/pdf/vowlan_wp.pdf.** September 2003.

Bims, Harry. "Securing Enterprise WLANs". White Paper. [Online] Available. http://web.archive.org/web/20040303212529/airflownetworks.com/solutions/pdf/securing_wlans_wp.pdf. August 2003.

Bims, H. and Cioffi. J. "Trellis Coding for Full-Response CPM", *Third Generation Wireless Information Networks*, Kluwer Academic Publishers, 1992.

Bims, H. and Cioffi. J. "Trellis Coding for Full-Response CPM", *WINLAB WORKSHOP*, East Brunswick, NJ. October 18-19, 1990.

Bims, H. and Cioffi, J. "Trellis Coding for Partial-Response CPM", *1991 International Symposium on Information Theory*, Budapest, Hungary. June 24-28, 1991.

Bims, H. and Cioffi, J. "Trellis Coding with M-ary MSK Constraints", *GLOBECOM '89*, Dallas TX. Nov. 1989.

Professional Associations and Achievements

- Jan 2009 – Present Vice-Chair and Board of Directors, Menlo Park Chamber of Commerce
- Nov 2007 – Sep 2010 Vice-Chair and Secretary, IEEE 802.16h License Exempt Group
- Feb 2002 – Jan 2011 Member, City of Menlo Park Planning Commission (2006 Chairperson, 2005 Vice-Chairperson)
- Feb 2012 – Present Senior Member, IEEE
- Jan 2000 – Dec 2000 Chair, IEEE Engineering Management Society – Silicon Valley Chapter
- Jun 1985 - Jun 1991 AT&T Bell Laboratories Cooperative Research Fellow