UNITED STATES PATENT AND TRADEMARK OFFICE

UNITED STATES DEPARTMENT OF COMMERCE
United States Patent and Trademark Office
Address: COMMISSIONER FOR PATENTS
P.O. Box 1450
Alexandria, Virginia 22313-1450
www.uspto.gov

APPLICATION NUMBER	FILING OR 371(C) DATE	FIRST NAMED APPLICANT	ATTY. DOCKET NO./TITLE
60/422,670	10/31/2002	Steve J. Shattil	CIPHY00

CONFIRMATION NO. 1909

POA ACCEPTANCE LETTER

30678
CONNOLLY BOVE LODGE & HUTZ LLP
1875 EYE STREET, N.W.
SUITE 1100
WASHINGTON, DC 20036

OC000000027414706

Date Mailed: 12/21/2007

NOTICE OF ACCEPTANCE OF POWER OF ATTORNEY

This is in response to the Power of Attorney filed 11/27/2007.

The Power of Attorney in this application is accepted. Correspondence in this application will be mailed to the above address as provided by 37 CFR 1.33.

/deelliott/

Office of Initial Patent Examination (571) 272-4000 or 1-800-PTO-9199

UNITED STATES PATENT AND TRADEMARK OFFICE

UNITED STATES DEPARTMENT OF COMMERCE
United States Patent and Trademark Office
Address: COMMISSIONER FOR PATENTS
P.O. Box 1450
Alexandria, Virginia 22313-1450
www.uspto.gov

APPLICATION NUMBER	FILING OR 371(C) DATE	FIRST NAMED APPLICANT	ATTY. DOCKET NO./TITLE
60/422,670	10/31/2002	Steve J. Shattil	CIPHY00

CONFIRMATION NO. 1909

POWER OF ATTORNEY NOTICE

Steve Shattil
4980 Meredith Way #201
Boulder, CO 80303

OC000000027414705

Date Mailed: 12/21/2007

NOTICE REGARDING CHANGE OF POWER OF ATTORNEY

This is in response to the Power of Attorney filed 11/27/2007.

- The Power of Attorney to you in this application has been revoked by the assignee who has intervened as provided by 37 CFR 3.71. Future correspondence will be mailed to the new address of record(37 CFR 1.33).

/deelliott/

Office of Initial Patent Examination (571) 272-4000 or 1-800-PTO-9199

IN THE UNITED STATES PATENT AND TRADEMARK OFFICE

In re Patent Application Nos.:
09/347,182; 09/718,851; 09/381,588;
60/163,141; 09/703,202; 60/194,633;
09/824,264; 60/219,482; 10/770,202;
60/259,433; 10/034,386; 60/286,850;
10/131,163; 60/422,670; 10/697,534;
60/431,877; 60/435,439; 10/730,452;
10/360,346; 10/414,663; 11/102,152;
09/022,950; 09/393,431; 09/601,922;
11/365,264; 09/906,257; 11/424,176;
11/621,014; 10/446,022; 09/381,588

Customer No.: 30678

Revocation and Power of Attorney

Commissioner for Patents
P.O. Box 1450
Alexandria, VA 22313-1450

Sir:

All previous powers of attorney and authorizations of agent are hereby revoked, and the undersigned hereby appoints the attorneys and agents of Connolly Bove Lodge & Hutz LLP associated with U.S. Patent and Trademark Office ("PTO") Customer Number 30678 to prosecute these applications and any U.S., foreign, or international applications under the Patent Cooperation Treaty based on them and to transact all business in the PTO connected therewith, and to receive all communications from the PTO, including the patent documents. Further details about each application are found in the Appendix to this paper. The authority under this Power of Attorney of each person listed under the aforementioned PTO Customer Number shall automatically terminate and be revoked upon such person ceasing to be associated with Connolly Bove Lodge & Hutz LLP.

Designation of Correspondence Address

Please send all notices, official letters, documents, communications, and other correspondence regarding these applications to:

Connolly Bove Lodge & Hutz LLP
1875 Eye Street NW, Suite 1100
Washington, DC 20006

or to the address currently associated with PTO Customer Number 30678. Please also record the respective Attorney Docket Numbers in the attached appendix in any applicable databases.

Certificate Under 37 C.F.R. § 3.73(b)

Lot 41 Acquisition Foundation, LLC is the assignee of the entire right, title, and interest in these patents and applications by virtue of an assignment from Aquity LLC to Lot 41 Acquisition Foundation, LLC, recorded in the records of the PTO on September 6, 2007 at Reel 019789, Frame 0509. To the best of the undersigned's knowledge and belief, the titles are in the name of said assignee. The undersigned, whose title is supplied below, is empowered to sign this certificate on behalf of Lot 41 Acquisition Foundation, LLC.

Signed: _____ Date: 11/19/07
Name: Robert Silber
Title: Authorized Person
Lot 41 Acquisition Foundation, LLC

APPENDIX: DETAILS OF LISTED APPLICATIONS

Appln. No.	Confirmation No.	Patent No.	Filing Date	First Named Inventor	Title	Attorney Docket No.
09/347,182	3526		07-02-1999	Steve J. SHATTIL	METHOD AND APPARATUS FOR USING FREQUENCY DIVERSITY TO SPATIALLY SEPARATE WIRELESS COMMUNICATION SIGNALS	27592-00611-US1
09/718,851	3170		11-22-2000	Steve J. SHATTIL	MULTIPLE INPUT, MULTIPLE OUTPUT CARRIER INTERFEROMETRY ARCHITECTURE	27592-00405-US1
09/381,588	4149	7,010,048	09-20-1999	Steve J. SHATTIL	MULTIPLE ACCESS METHOD AND SYSTEM	27592-00399-US3
60/163,141	1238		11-02-1999	Steve J. SHATTIL	METHOD AND APPARATUS FOR USING MULTICARRIER INTERFEROMETRY TO ENHANCE OPTICAL FIBER COMMUNICATIONS	27592-00408-US1
09/703,202	3524	7,076,168	10-31-2000	Steve J. SHATTIL	METHOD AND APPARATUS FOR USING MULTICARRIER INTERFEROMETRY TO ENHANCE OPTICAL FIBER COMMUNICATIONS	27592-00408-US2
60/194,633	5503		04-04-2000	Steve J. SHATTIL	SPREAD SPECTRUM COMMUNICATION METHOD AND SYSTEM USING DIVERSITY CORRELATION AND MULTI-USER DETECTION	27592-00642-US1
09/824,264	1606		04-02-2001	Steve J. SHATTIL	SPREAD SPECTRUM COMMUNICATION METHOD AND SYSTEM USING DIVERSITY CORRELATION AND MULTI-USER DETECTION	27592-00511-US1

Appln. No.	Confirmation No.	Patent No.	Filing Date	First Named Inventor	Title	Attorney Docket No.
60/219,482	1099		07-19-2000	Steve J. SHATTIL	METHOD AND APPARATUS FOR TRANSMITTING AND RECEIVING SIGNALS HAVING A CARRIER INTERFEROMETRY ARCHITECTURE	27592-00403-US1
10/770,202	9672		02-02-2004	Steve J. SHATTIL	METHOD AND APPARATUS FOR TRANSMITTING SIGNALS HAVING A CARRIER-INTERFEROMETRY ARCHITECTURE	27592-00403-US6
60/259,433			12-30-2000	Steve J. SHATTIL	DIRECT SEQUENCE CODE INTERFEROMETRY MULTIPLE ACCESS (DS-CIMA)	27592-00687-US1
10/034,386	9967		12-27-2001	Steve J. SHATTIL	METHOD AND APPARATUS FOR USING FREQUENCY DIVERSITY TO SEPARATE WIRELESS COMMUNICATION SIGNALS	27592-00408-US3
60/286,850			04-26-2001	Steve J. SHATTIL	METHOD AND APPARATUS FOR USING CARRIER INTERFEROMETRY TO PROCESS MULTI-CARRIER SIGNALS	27592-00692-US1
10/131,163	7722		4-24-2002	Steve J. SHATTIL	MULTICARRIER SUB-LAYER FOR DIRECT SEQUENCE CHANNEL AND MULTIPLE-ACCESS CODING	27592-00402-US2
60/422,670	1909		10-31-2002	Steve J. SHATTIL	CARRIER INTERFEROMETRY CODING WITH APPLICATIONS TO CELLULAR NETWORKS	27592-00404-US1
10/697,534	7591		10-30-2003	Steve J. SHATTIL	CARRIER INTERFEROMETRY CODING WITH APPLICATIONS TO CELLULAR AND LOCAL AREA NETWORKS	27592-00404-US3

Appln. No.	Confirmation No.	Patent No.	Filing Date	First Named Inventor	Title	Attorney Docket No.
60/431,877	1878		12-09-2002	Steve J. SHATTIL	TIME-DOMAIN APPLICATIONS OF BASIC CARRIER INTERFEROMETRY CODES FOR SPECTRUM ALLOCATION	27592-00403-US4
60/435,439	2397		12-20-2002	Steve J. SHATTIL	SOFTWARE ADAPTABLE HIGH PERFORMANCE MULTICARRIER TRANSMISSION PROTOCOL	27592-00403-US3
10/730,452	2291		12-08-2003	Steve J. SHATTIL	SOFTWARE ADAPTABLE HIGH PERFORMANCE MULTICARRIER TRANSMISSION PROTOCOL	27592-00403-US5
10/360,346	5713		02-07-2003	Steve J. SHATTIL	UNIFIED MULTI-CARRIER FRAMEWORK FOR MULTIPLE-ACCESS TECHNOLOGIES	27592-00408-US4
10/414,663	5355		04-16-2003	Steve J. SHATTIL	ORTHOGONAL SUPERPOSITION CODING FOR DIRECT-SEQUENCE COMMUNICATIONS	27592-00404-US2
11/102,152	6837		04-07-2005	Steve J. SHATTIL	FREQUENCY-SHIFTED FEEDBACK CAVITY USED AS A PHASED ARRAY ANTENNA CONTROLLER AND CARRIER INTERFERENCE MULTIPLE ACCESS SPREAD-SPECTRUM TRANSMITTER	27592-00399-US4
09/022,950	6293	5,955,992	02-12-1998	Steve J. SHATTIL	FREQUENCY-SHIFTED FEEDBACK CAVITY USED AS A PHASED ARRAY ANTENNA CONTROLLER AND CARRIER INTEFERENCE MULTIPLE ACCESS SPREAD-SPECTRUM TRANSMITTER	27592-00399-US1

Appln. No.	Confirmation No.	Patent No.	Filing Date	First Named Inventor	Title	Attorney Docket No.
09/393,431	2698	6,888,887	09-10-1999	Steve J. SHATTIL	FREQUENCY-SHIFTED FEEDBACK CAVITY USED AS A PHASED ARRAY ANTENNA CONTROLLER AND CARRIER INTEFERENCE MULTIPLE ACCESS SPREAD-SPECTRUM TRANSMITTER	27592-00399-US2
09/906,257	7560	6,686,879	07-16-2001	Steven J. SHATTIL	METHOD AND APPARATUS FOR TRANSMITTING AND RECEIVING SIGNALS HAVING A CARRIER INTERFEROMETRY ARCHITECTURE	27592-00403-US1
10/446,022	4903	7,286,604	05-27-2003	Steve J. SHATTIL	CARRIER INTERFEROMETRY CODING AND MULTICARRIER PROCESSING	27592-00690-US1
11/424,176	7108		06-14-2006	Steve J. SHATTIL	METHOD AND APPARATUS FOR USING MULTICARRIER INTERFEROMETRY TO ENHANCE OPTICAL FIBER COMMUNICATIONS	27592-00406-US1
11/621,014	1378		01-08-2007	Steve J. SHATTIL	MULTICARRIER SUB-LAYER FOR DIRECT SEQUENCE CHANNEL AND MULTIPLE-ACCESS CODING	27592-00407-US1
11/365,264	1714		02-28-2006	Steve J. SHATTIL	MULTIPLE ACCESS METHOD AND SYSTEM	27592-00409-US1

575738

Electronic Acknowledgement Receipt

EFS ID:	2511827
Application Number:	60422670
International Application Number:	
Confirmation Number:	1909
Title of Invention:	Carrier interferometry coding with applications to cellular networks
First Named Inventor/Applicant Name:	Steve J. Shattil
Correspondence Address:	Steve Shattil - 4980 Meredith Way #201 - Boulder CO 80303 US 7205640691 -
Filer:	Jeffrey W. Gluck
Filer Authorized By:	
Attorney Docket Number:	CIPHY00
Receipt Date:	27-NOV-2007
Filing Date:	31-OCT-2002
Time Stamp:	12:49:07
Application Type:	Provisional

Payment information:

Submitted with Payment	no

File Listing:

Document Number	Document Description	File Name	File Size(Bytes) /Message Digest	Multi Part /.zip	Pages (if appl.)
1	Power of Attorney	Shattil41POA.pdf	302938 fe94ee8162fe978a1eb5202d6e179acf3364d92e	no	6

Warnings:

Information:

Total Files Size (in bytes):	302938

This Acknowledgement Receipt evidences receipt on the noted date by the USPTO of the indicated documents, characterized by the applicant, and including page counts, where applicable. It serves as evidence of receipt similar to a Post Card, as described in MPEP 503.

New Applications Under 35 U.S.C. 111
If a new application is being filed and the application includes the necessary components for a filing date (see 37 CFR 1.53(b)-(d) and MPEP 506), a Filing Receipt (37 CFR 1.54) will be issued in due course and the date shown on this Acknowledgement Receipt will establish the filing date of the application.

National Stage of an International Application under 35 U.S.C. 371
If a timely submission to enter the national stage of an international application is compliant with the conditions of 35 U.S.C. 371 and other applicable requirements a Form PCT/DO/EO/903 indicating acceptance of the application as a national stage submission under 35 U.S.C. 371 will be issued in addition to the Filing Receipt, in due course.

New International Application Filed with the USPTO as a Receiving Office
If a new international application is being filed and the international application includes the necessary components for an international filing date (see PCT Article 11 and MPEP 1810), a Notification of the International Application Number and of the International Filing Date (Form PCT/RO/105) will be issued in due course, subject to prescriptions concerning national security, and the date shown on this Acknowledgement Receipt will establish the international filing date of the application.

11-01-02

60422670 PTO/SB/16 (10-01) #/PROV

Approved for use through 10/31/2002. OMB 0651-0032
U.S. Patent and Trademark Office; U.S. DEPARTMENT OF COMMERCE

Under the Paperwork Reduction Act of 1995, no persons are required to respond to a collection of information unless it displays a valid OMB control number.

JC687 U.S. PTO 10/31/02

JC996 U.S. PTO 60422670 10/31/02

PROVISIONAL APPLICATION FOR PATENT COVER SHEET

This is a request for filing a PROVISIONAL APPLICATION FOR PATENT under 37 CFR 1.53(c).

Express Mail Label No. EU0889714805US

INVENTOR(S)

Given Name (first and middle [if any])	Family Name or Surname	Residence (City and either State or Foreign Country)
Steve J	SHATTIL	Boulder, CO

☐ *Additional inventors are being named on the _____ separately numbered sheets attached hereto*

TITLE OF THE INVENTION (500 characters max)

Carrier Interferometry Coding with Applications to Cellular Networks

Direct all correspondence to: **CORRESPONDENCE ADDRESS**

☐ Customer Number _____ → *Place Customer Number Bar Code Label here*

Type Customer Number here

OR

☑ Firm *or* Individual Name	Steve Shattil				
Address	4980 Meredith Way #201				
Address					
City	Boulder	State	CO	ZIP	80303
Country	US	Telephone	720 564-0691	Fax	

ENCLOSED APPLICATION PARTS ***(check all that apply)***

☑ Specification *Number of Pages* 61

☑ Drawing(s) *Number of Sheets* 11

☐ Application Data Sheet. See 37 CFR 1.76

☐ CD(s), Number

☐ Other (specify)

METHOD OF PAYMENT OF FILING FEES FOR THIS PROVISIONAL APPLICATION FOR PATENT

☑ Applicant claims small entity status. See 37 CFR 1.27.

☑ A check or money order is enclosed to cover the filing fees

☐ The Commissioner is hereby authorized to charge filing fees or credit any overpayment to Deposit Account Number:

☐ Payment by credit card. Form PTO-2038 is attached.

FILING FEE AMOUNT ($): $80.00

The invention was made by an agency of the United States Government or under a contract with an agency of the United States Government.

☑ No.

☐ Yes, the name of the U.S. Government agency and the Government contract number are: _____

Respectfully submitted,

SIGNATURE [signature]

TYPED or PRINTED NAME Steve J Shattil

TELEPHONE 720 564-0691

Date 10/31/2002

REGISTRATION NO. *(if appropriate)*

Docket Number: CIPHY00

USE ONLY FOR FILING A PROVISIONAL APPLICATION FOR PATENT

This collection of information is required by 37 CFR 1.51. The information is used by the public to file (and by the PTO to process) a provisional application. Confidentiality is governed by 35 U.S.C. 122 and 37 CFR 1.14. This collection is estimated to take 8 hours to complete, including gathering, preparing, and submitting the complete provisional application to the PTO. Time will vary depending upon the individual case. Any comments on the amount of time you require to complete this form and/or suggestions for reducing this burden, should be sent to the Chief Information Officer, U.S. Patent and Trademark Office, U.S. Department of Commerce, Washington, D.C. 20231. DO NOT SEND FEES OR COMPLETED FORMS TO THIS ADDRESS. SEND TO: Box Provisional Application, Assistant Commissioner for Patents, Washington, D.C. 20231.

60422670.103102

Provisional Patent Application of Steve Shattil

For

Carrier Interferometry Coding with Applications to Cellular Networks

References:

The following references, including journal articles, published conference proceedings, and books, are hereby incorporated by reference in their entirety:

1. S.A. Zekavat and C.R. Nassar, "Smart antenna arrays with oscillating beam patterns: characterization of transmit diversity in semi-elliptic coverage," accepted for publication in *IEEE Transactions on Communications* (acceptance letter date: May 3, 2002).
2. S.A. Zekavat and C.R. Nassar, "Oscillating beam adaptive antennas and multi-carrier systems: achieving transmit diversity, frequency diversity and directionality," accepted for publication in *IEEE Transactions on Vehicular Technology* (acceptance letter date: March 18, 2002).
3. F. Zhu, C.R. Nassar, and Z. Wu, "High-efficiency, potentially low-cost fiber-optic links via carrier-interferometry pulse shaping," accepted for publication in *IEEE Photonics Technology Letters* (acceptance letter date: March 14, 2002)
4. C.R. Nassar, B. Natarajan, and Z. Wu, "Multi-carrier platform for wireless communications. Part 1: High-performance, high-throughput TDMA and DS-CDMA via multi-carrier implementations," *Wireless Communications and Mobile Computing*, Vol. 2, No. 4, June 2002, pp. 357-380.
5. C.R. Nassar, B. Natarajan, D. Wiegandt and Z. Wu, "Multi-carrier platform for wireless communications. Part 2: OFDM and MC-CDMA systems with high-performance, high-throughput via innovations in spreading," *Wireless Communications and Mobile Computing*, Vol. 2, No. 4, June 2002, pp. 381-403.
6. B. Natarajan, C.R. Nassar, S. Shattil, Marco Michelini, and Z. Wu, "High-performance MC-CDMA via carrier interferometry codes," *IEEE Transactions on Vehicular Technology*, Vol. 50, No. 6, Nov. 2001, pp. 1344-1353.
7. B. Natarajan, C.R. Nassar, and S. Shattil, "Innovative pulse shaping for high-performance wireless TDMA," *IEEE Communications Letters*, Vol. 5, No. 9, Sept. 2001, pp.372-374.
8. S. A. Zekavat, C.R. Nassar, and S. Shattil, "Smart antenna spatial sweeping for combined directionality and transmit diversity," *Journal of Communications and*

Networks: Special Issue on Adaptive Antennas for Wireless Communications, Vol. 2, No. 4, Dec. 2000, pp.325-330.

9. B. Natarajan, C.R. Nassar, and V. Chandrasekhar, "Generation of correlated Rayleigh fading envelopes for spread spectrum applications," *IEEE Communications Letters*, Vol. 4, No. 1, Jan. 2000, pp. 9-11.
10. Z. Wu and C.R. Nassar, "Novel orthogonal codes for DS-CDMA with improved cross-correlation characteristics in multipath fading channels," *IEEE International Symposium on Wireless Personal Multimedia Communications*, Honolulu, Hawaii, Oct. 27-30, 2002, pp. (not yet known).
11. S. Zekavat and C.R. Nassar, "High capacity wireless via MC-CDMA/oscillating beam smart antenna systems," *IEEE International Symposium on Wireless Personal Multimedia Communications*, Honolulu, Hawaii, Oct. 27-30, 2002, pp. (not yet known).
12. D.A. Wiegandt and C.R. Nassar, "High-throughput, high-performance OFDM via pseudo-orthogonal carrier interferometry: type 2," *IEEE International Symposium on Wireless Personal Multimedia Communications*, Honolulu, Hawaii, Oct. 27-30, 2002, pp. (not yet known).
13. F. Zhu and C.R. Nassar, "Carrier interferometry pulse shaping for high throughput, low cost fiber optic links," *National Fiber Optic Engineers Conference (NFOEC 2002)*, Dallas, TX, Sept. 15-19, 2002, pp. (not yet known)
14. B. Natarajan, C.R. Nassar, and S. Shattil, "High data rate FSK via multi-carrier implementations for wireless personal area networks," *SPIE's ITCom 2002: Enabling Technologies for 3G and Beyond*, Boston, MA, July 29-Aug. 2, 2002, pp. (not yet known)
15. Z. Wu and C.R. Nassar, "Ultra wideband MC-CDMA and CI/MC-CDMA systems," *SPIE's ITCom 2002: Enabling Technologies for 3G and Beyond*, Boston, MA, July 29-Aug. 2, 2002, pp. (not yet known)
16. S. Shattil and C.R. Nassar, "Improved fast Fourier transform implementation based on orthogonal carrier processing," *SPIE's ITCom 2002: Enabling Technologies for 3G and Beyond*, Boston, MA, July 29-Aug. 2, 2002, pp. (not yet known)

17. F. Zhu and C.R. Nassar, "Carrier interferometry pulse shaping for dispersion compensation," *SPIE's ITCom 2002: Optical Transmission Systems and Equipment for WDM Networking*, Boston, MA, July 29-Aug. 2, 2002, pp. (not yet known)
18. Z. Wu, D. Wiegandt, and C.R. Nassar, "High performance 802.11b WLAN with quadruple throughput via carrier interferometry chip shaping," *12th Virginia Tech Symposium on Wireless Personal Communications*, Blacksburg, VA, June 5-7, 2002, pp. (not yet known).
19. Z.Wu, C.R. Nassar and S. Lu, "Optimum combining for multicarrier DS-CDMA systems," *12th Virginia Tech Symposium on Wireless Personal Communications*, Blacksburg, VA, June 5-7, 2002, pp. (not yet known).
20. F. Zhu, Z. Wu, and C.R. Nassar, "Generalized fading channel model with application to UWB," *IEEE Conference on Ultra Wideband Systems and Technologies (UWBST-02)*, Baltimore, Maryland, May 20-23, 2002, pp. 53-58.
21. Z. Wu, F. Zhu and C.R. Nassar, "High performance ultra-wide bandwidth systems via novel pulse shaping and frequency domain processing," *IEEE Conference on Ultra Wideband Systems and Technologies (UWBST-02)*, Baltimore Maryland, May 20-23, 2002, pp. 13-18.
22. S.A. Zekavat, C.R. Nassar, and S. Shattil, "Merging oscillating beam smart antenna arrays and wideband multi-carrier CDMA: exploiting transmit diversity, frequency diversity and directionality," *International Conference on Third Generation Wireless and Beyond*, San Francisco, CA, May 28-31, 2002, pp. 435-440.
23. Z. Wu and C.R. Nassar, "FD-MC-CDMA with multi user detection: exploiting frequency diversity for high performance wireless communications," *International Conference on Third Generation Wireless and Beyond*, San Francisco, CA, May 28-31, 2002, pp. 814-819.
24. S.A. Zekavat, C.R. Nassar, and S. Shattil, "Combining multi-input single-output systems and multi-carrier systems: achieving transmit diversity, frequency diversity, and directionality," *IEEE Vehicular Technology Conference (VTC2002)*, Birmingham, Alabama, May 5-9, 2002, pp. 1353-1358.

25. Z. Wu and C.R. Nassar, "Maximum likelihood combining for MC-CDMA," *IEEE Vehicular Technology Conference (VTC2002)*, Birmingham, Alabama, May 5-9, 2002, pp. 1293-1297.
26. B. Natarajan, C.R. Nassar, and S. Shattil, "Novel multi-carrier implementation of FSK for bandwidth efficient, high performance wireless systems," *IEEE International Conference on Communications (ICC2002)*, New York, NY, Apr. 28 – May 2, 2002, pp. 872-876.
27. S.A. Zekavat, C.R. Nassar and S. Shattil, "Merging DS-CDMA (with CI chip shapes) and oscillating-beam smart antenna arrays: exploiting transmit diversity, frequency diversity, and directionality," *IEEE International Conference on Communications (ICC2002)*, Apr. 28 – May 2, 2002, New York, NY, pp. 742-747.
28. D. Wiegandt and C.R. Nassar, "Higher-speed higher-performance 802.11a wireless LAN via carrier interferometry orthogonal frequency division multiplexing" *IEEE International Conference on Communications (ICC2002)*, Apr. 28 – May 2, 2002, New York, NY, pp. 527-532.
29. Z. Wu, C.R. Nassar, and S. Lu, "High capacity high performance DS-CDMA via carrier interferometry chip shaping" *IEEE International Conference on Communications (ICC2002)*, Apr. 28 – May 2, 2002, New York, NY, pp. 538-543.
30. C.R. Nassar, Z. Wu, and D.A. Wiegandt, "Innovations in OFDM and DSSS for very high performance, very high bit rate WLAN/802.11," *International Symposium on Advanced Radio Technology (ISART2002)*, Boulder, CO, March 4-6, 2002, proceedings available online at http://www.its.bldrdoc.gov/meetings/art/art02/slides02/speakers02.html.
31. S.A. Zekavat and C.R. Nassar, "Semi-elliptic-coverage geometric based stochastic channel modeling for smart antenna arrays with oscillating beam patterns," *IEEE Global Telecommunications Conference (GLOBECOM 2001)*, San Antonio, TX, Nov. 25-29, 2001, pp. 3237-3241.
32. D.A. Wiegandt and C.R. Nassar, "High-speed high-performance 802.11a wireless LAN via carrier-interferometry orthogonal frequency division multiplexing at 5GHz," *IEEE Global Telecommunications Conference (GLOBECOM2001)*, San Antonio, TX, Nov. 25-29, 2001, pp. 3579-3582.

33. S.A. Zekavat and C.R. Nassar, "Adaptive antenna power-azimuth spectrum using a geometric based channel model with a semi-elliptic scenario," *23rd Annual Meeting and Symposium of the American Measurement and Techniques Association (AMTA 2001)*, Denver, CO, Oct. 21-26, 2001, pp. 346-348.
34. D. A. Wiegandt, C.R. Nassar, and Z. Wu, "Overcoming PAPR issues in OFDM via carrier interferometry codes," *IEEE Vehicular Technology Conference,* Atlantic City, NJ, Oct. 7-11, 2001, pp. 660-663.
35. Z. Wu, C.R. Nassar, and S. Shattil, "Ultra-wideband DS-CDMA via innovations in chip shaping," *IEEE Vehicular Technology Conference,* Atlantic City, NJ, Oct. 7-11, 2001, pp. 2470-2474.
36. S. A. Zekavat and C.R. Nassar, "Fading channel characterization for oscillating-beam-pattern smart antennas using geometric based stochastic channel modeling with circular coverage area," *IEEE Vehicular Technology Conference,* Atlantic City, NJ, Oct. 7-11, 2001, pp. 1452-1456.
37. S.A. Zekavat, C.R. Nassar, and S. Shattil, "The Merger of a Single Oscillating Beam Smart Antenna and MC-CDMA: Transmit Diversity, Frequency Diversity and Directionality," *IEEE Emerging Technologies Symposium,* Dallas, TX, Sept. 10-11, 2001, pp. 107-112.
38. B. Natarajan, C.R. Nassar, and S. Shattil, "Enhanced bluetooth and IEEE 802.11 (FH) via mutli-carrier implementation of the physical layer", *IEEE Emerging Technologies Symposium,* Dallas, TX, Sept. 10-11, 2001, pp. 129-133.
39. D. A. Wiegandt, Z. Wu, and C.R. Nassar, "High performance high throughput IEEE 802.11 DSSS WLAN via carrier interferometry chip shaping," *IEEE Emerging Technologies Symposium,* Dallas, TX, Sept. 10-11, 2001, pp.124-128.
40. S. A. Zekavat, C.R. Nassar, and S. Shattil, "Geometric-based stochastic channel model for adaptive antennas with oscillating beam patterns," *IEEE International Symposium on Personal, Indoor, and Radio Communications PIMRC01,* San Diego, CA, Sept. 30-Oct.3, 2001, pp. 130-134.
41. D. A. Wiegandt and C.R. Nassar, "High-throughput, high-performance OFDM via pseudo-orthogonal carrier interferometry coding," *IEEE International Symposium on*

Personal, Indoor, and Radio Communications PIMRC01, San Diego, CA, Sept. 30-Oct.3, 2001, pp. 98-102.

42. Z. Wu, B. Natarajan, C.R. Nassar, and S. Shattil, "High performance, high-capacity MC-CDMA via carrier interferometry," *IEEE International Symposium on Personal, Indoor, and Radio Communications PIMRC01,* San Diego, CA, Sept. 30-Oct.3, 2001, pp. 11-16.
43. B. Natarajan and C.R. Nassar, "Crest factor considerations in MC-CDMA with carrier interferometry codes," *IEEE Pacific Rim Conference on Communications, Computers, and Signal Processing,* Victoria, Canada, Aug. 26-28, 2001, pp.445-448.
44. D. A. Wiegandt and C.R. Nassar, "Peak to average power reduction in high-performance, high-throughput OFDM via pseudo-orthogonal carrier-interferometry coding," *IEEE Pacific Rim Conference on Communications, Computers, and Signal Processing,* Victoria, Canada, Aug. 26-28, 2001, pp.453-456.
45. Z. Wu, C.R. Nassar, and S. Lu, "A novel ML combining RAKE receiver for DS-CDMA," *IEEE Pacific Rim Conference on Communications, Computers, and Signal Processing,* Victoria, Canada, Aug. 26-28, 2001, pp.136-139.
46. C.R. Nassar, "Discovery of a unified multicarrier framework for multiple-access technology?" *SPIE's ITCom 2001: Enabling Technologies for 3G and Beyond*, Aug. 20-24, 2001, Denver, CO, pp. 81-93 (Keynote Presentation).
47. S.A. Zekavat and C.R. Nassar, "Diversity gains in wireless systems with oscillating beam smart antennas: an evaluation via geometric-based stochastic channel models using point scatterers," *Proceedings of the SPIE's ITCom 2001: Enabling Technologies for 3G and Beyond*, Aug. 20-24, 2001, Denver, CO., pp. 118-124.
48. Z. Wu, C.R. Nassar, B. Natarajan, "FD-MC-CDMA: A frequency based multiple access architecture for high performance wireless communication," *IEEE Radio and Wireless Conference,* Waltham, MA, Aug. 19-22, 2001, pp.169-172.
49. S.A. Zekavat, C.R. Nassar, and S. Shattil, "Achieving directionality and transmit diversity via smart antenna pattern oscillation with a geometric-based stochastic channel model for coherence time evaluation," *IEEE Radio and Wireless Conference,* Waltham, MA, Aug. 19-22, 2001, pp.223-226.

50. Z. Wu, C.R. Nassar, and S. Shattil, "Next generation high performance DS-CDMA via carrier interferometry," *The 12th Annual International Conference on Wireless Communications WIRELESS2001*, Calgary, Alberta, July 9-11, 2001, pp. 564-569.

51. D.A. Wiegandt and C.R. Nassar, "High performance wireless ATM via carrier interferometry orthogonal frequency division multiplexing," *IASTED Wireless and Optical Communications Conference WOC 2001*, June 27-29, 2001, Banff, Canada, pp. 82-86.

52. D.A. Wiegandt and C.R. Nassar, "High performance OFDM via carrier interferometry," *2001 International Conference on Third Generation Wireless and Beyond*, San Francisco, CA, May 30-June 2, 2001, pp. 404-409.

53. Z. Wu, C.R. Nassar, and S. Shattil, "Chip shaping advances for high capacity DS-CDMA," *2001 International Conference on Third Generation Wireless and Beyond*, San Francisco, CA, May 30-June 2, 2001, pp. 928-932.

54. S.A. Zekevat, C.R. Nassar, and S. Shattil, "Combined directionality and transmit diversity via smart antenna spatial sweeping," *Allerton Conference on Communications, Control, and Computing*, Champaign-Urbana, Illinois, Oct. 4-6, 2000, pp. 203-211.

55. B. Natarajan, C.R. Nassar, and S. Shattil, "Throughput enhancement in TDMA through carrier interferometry pulse shaping," *IEEE Vehicular Technology Conference VTC2000,* Boston, MA, Sept. 24-28, 2000, pp. 1799-1803.

56. Z. Wu, C.R. Nassar, A. Alagar, and S.Shattil, "Wireless communication system architecture and physical layer design for airport surface management," *IEEE Vehicular Technology Conference VTC2000,* Boston, MA, Sept. 24-28, 2000, pp. 1950-1955.

57. B. Natarajan and C.R. Nassar, "Introducing novel FDD and FDM in MC-CDMA to enhance performance," *IEEE Radio and Wireless Conference,* Denver, CO, Sept. 10-13, 2000, pp. 29-32.

58. Z. Wu and C.R. Nassar, "MMSE frequency combining for CI/DS-CDMA," *IEEE Radio and Wireless Conference*, Denver, CO, Sept. 10-13, 2000, pp. 103-106.

59. C.R. Nassar and Z. Wu, "High performance broadband DS-CDMA via carrier interferometry chip shaping," *International Symposium on Advanced Radio*

Technologies ISART2000, Boulder, CO, Sept. 6-8, 2000, proceeding available online at http://www.its.bldrdoc.gov/meetings/art/art00/slides00/speakers00.html.

60. B. Natarajan, C.R. Nassar, and S. Shattil, "Exploiting frequency diversity in TDMA through carrier interfometry," *The 12th Annual International Conference on Wireless Communications WIRELESS2000*, Calgary, Alberta, Canada, July 10-12, 2000, pp. 469-476.
61. S. Shattil, A. Alagar, Z. Wu and C.R. Nassar, "Wireless communication system design for airport surface management – Part I: Airport ramp measurements at 5.8GHz," *IEEE International Conference on Communications ICC 2000*, June 18-22, 2000, New Orleans, pp. 1552-1556.
62. C.R. Nassar, B. Natarajan, and V Chandrasekar, "Correlated Rayleigh random variables with spread spectrum application," *IEEE Radio and Wireless Conference,* Denver, CO, Aug. 1-4, 1999, pp.45-48.
63. S. Shattil and C.R. Nassar, "Array Control Systems Using a Frequency-Shifted Feedback Cavity," *IEEE Radio and Wireless Conference*, Denver, CO, Aug. 1-4, 1999, pp. 215-218.
64. C.R. Nassar, B. Natarajan, and S. Shattil, "Introduction of carrier interference to spread spectrum multiple access ," *IEEE Emerging Technologies Symposium*, Dallas, Texas, Apr. 12-13, 1999, pp. 4.1-4.5.
65. C.R. Nassar, B. Natarajan, Z. Wu, D. Wiegand, S.A. Zekavat, and S. Shattil, *Multi-Carrier Technologies for Wireless Communication*, Kluwer Academic Publishers, Norwell, MA., December 2001.
66. C.R. Nassar, *Telecommunications Demystified: A Streamlined Course in Digital Communications (and Some Analog) for EE Students and Practicing Engineers,* Butterworth-Heinemann, January 2001.

Combinations of the present invention, as well as applications, aspects, embodiments, permutations, adaptations, and variations of the present invention may be considered in combination with the following publications, which are included in their entirety by reference:

Sirikiat Ariyavisitakul, "**Turbo space-time processing to improve wireless channel capacity**", *IEEE Transactions on Communications*, vol. 48, no. 8, August 2000 pp. 1347-1359
Summary: By deriving a generalized Shannon capacity formula for multiple-input, multiple-output Rayleigh fading channels, and by suggesting a layered space–time architecture concept that attains a tight lower...

Siavash Alamouti, "**A Simple Transmit Diversity Technique for Wireless Communications**", *IEEE Journal on Selected Areas in Communications*, vol. 16, no. 8, October 1998 pp. 1451-1458
Summary: This paper presents a simple two-branch transmit diversity scheme. Using two transmit antennas and one receive antenna the scheme provides the same diversity order as maximal-ratio receiver combining...

Ayman Naguib, Vahid Tarokh, Nambirajan Seshadri and A. Calderbank, "**A Space-Time Coding Modem for High-Data-Rate Wireless Communications**", *IEEE Journal on Selected Areas in Communications*, vol. 16, no. 8, October 1998 pp. 1459 - 1478
Summary: This paper presents the theory and practice of a new advanced modem technology suitable for high-data-rate wireless communications and presents its performance over a frequency-flat Rayleigh fading c...

Claude Berrou and Alain Glavieux, "**Near Optimum Error Correcting Coding and Decoding: Turbo-Codes**", *IEEE Transactions on Communications*, vol. 44, no. 10, October 1996 pp. 1261-1271
Summary: This paper presents a new family of convolutional codes, nicknamed turbo-codes, built from a particular concatenation of two recursive systematic codes, linked together by nonuniform interleaving. De...

Audrey Viterbi and Andrew Viterbi, "**Erlang Capacity of a Power Controlled CDMA System**", *IEEE Journal on Selected Areas in Communications*, vol. 11, no. 6, August 1993 pp. 892-900
Summary: This work presents an approach to the evaluation of the reverse link capacity of a code-division multiple access (CDMA) cellular voice system which employs power control and a variable rate vocoder b...

Alexandra Duel-Hallen, "**Decorrelating Decision-Feedback Multiuser Detector for Synchronous Code-Division Multiple-Access Channel**", *IEEE Transactions on Communications*, vol. 41, no. 2, February 1993 pp. 285-290
Summary: A decorrelating decision-feedback detector (DF) for synchronous code-division multiple-access (CDMA) that uses decisions of the stronger users when forming decisions for the weaker ones is described....

Charles Brackett, "**Dense Wavelength Division Multiplexing Networks: Principles and Applications**", *IEEE Journal on Selected Areas in Communications*, vol. 8, no. 6, August 1990 pp. 948-964
Summary: The very broad bandwidth of low-loss optical transmission in a single-mode fiber and the recent improvements in single-frequency tunable lasers have stimulated significant advances in dense wavelengt...

R. Lupas and Sergio Verdú, "**Near-Far Resistance of Multiuser Detectors in Asynchronous Channels**", *IEEE Transactions on Communications*, vol. 38, no. 4, April 1990 pp. 496-508
Summary: Consideration is given to an asynchronous code-division multiple-access environment in which receiver has knowledge of the signature waveforms of all the users. Under the assumption of white Gaussian...

Dariush Divsalar and Marvin Simon, "**Multiple-Symbol Differential Detection of MPSK**", *IEEE Transactions on Communications*, vol. 38, no. 3, March 1990 pp. 300-308

Summary: A differential detection technique for MPSK (multiple-phase shift keying), which uses a multiple-symbol observation interval, is presented, and its performance is analyzed and simulated. The techniqu...

Justin Chuang, "**The Effects of Time Delay Spread on Portable Radio Communications Channels with Digital Modulation**", *IEEE Journal on Selected Areas in Communications*, vol. 5, no. 5, June 1987 pp. 879-889

Summary: Frequency-selective fading caused by multipath time delay spread degrades digital communication channels by causing intersymbol interference, thus resulting in an irreducible BER and imposing a upper...

Adel Saleh and Reinaldo Valenzuela, "**A Statistical Model for Indoor Multipath Propagation**", *IEEE Journal on Selected Areas in Communications*, vol. 5, no. 2, February 1987 pp. 128-137

Summary: The results of indoor multipath propagation measurements using 10 ns, 1.5 GHz, radarlike pulses are presented for a medium-size office building. The observed channel was very slowly time varying, wit...

Rodney Boehm, Yau-Chau Ching, C. Griffith and Frederick Saal, "**Standardized Fiber Optic Transmission Systems-A Synchronous Optical Network View**", *IEEE Journal on Selected Areas in Communications*, vol. 4, no. 9, December 1986 pp. 1424-1431

Summary: The deployment of fiber optic systems has drastically altered the complexion of the digital network, and standardization of optical interface parameters has assumed paramount importance. This paper r...

Leonard Cimini Jr., "**Analysis and Simulation of a Digital Mobile Channel Using Orthogonal Frequency Division Multiplexing**", *IEEE Transactions on Communications*, vol. 33, no. 7, July 1985 pp. 665-675

Summary: This paper discusses the analysis and simulation of a technique for combating the effects of multipath propagation and cochannel interference on a narrow-band digital mobile channel. This system uses...

G. Forney Jr., Robert Gallager, Gordon Lang, Fred Longstaff and Shahid Qureshi, "**Efficient Modulation for Band-Limited Channels**", *IEEE Journal on Selected Areas in Communications*, vol. 2, no. 5, September 1984 pp. 632-647

Summary: This paper attempts to present a comprehensive tutorial survey of the development of efficient modulation techniques for bandlimited channels, such as telephone channels. After a history of advances ...

Jack Winters, "**Optimum Combining in Digital Mobile Radio with Cochannel Interference**", *IEEE Journal on Selected Areas in Communications*, vol. 2, no. 4, July 1984 pp. 528-539

Summary: This paper studies optimum signal combining for space diversity reception in cellular mobile radio systems. With optimum combining, the signals received by the antennas are weighted and combined to m...

Peter Monsen, "**MMSE Equalization of Interference on Fading Diversity Channels**", *IEEE Transactions on Communications*, vol. 32, no. 1, January 1984 pp. 5-12

Summary: Adaptive equalization is used in digital transmission systems with parallel fading channels. The equalization combines the diversity channels and reduces intersymbol interference due to multipath ret...

Peter Runge and Patrick Trischitta, "**The SL Undersea Lightguide System**", *IEEE Journal on Selected Areas in Communications*, vol. 1, no. 3, April 1983 pp. 459-466
Summary: A digital optical fiber undersea cable system targeted for transatlantic service in 1988 is now under development at Bell Laboratories. The system uses single-mode fibers to carry data at a bit rate ...

R. Pawula, S. Rice and J. Roberts, "**Distribution of the Phase Angle Between Two Vectors Perturbed by Gaussian Noise**", *IEEE Transactions on Communications*, vol. 30, no. 8, August 1982 pp. 1828-1841
Summary: The probability distribution of the phase angle between two vectors perturbed by correlated Gaussian noises is studied in detail. Definite integral expressions are derived for the distribution functi...

Donald Cox, "**Cochannel Interference Considerations in Frequency Reuse Small-Coverage-Area Radio Systems**", *IEEE Transactions on Communications*, vol. 30, no. 1, January 1982 pp. 135-142
Summary: Frequency reuse small-coverage-area radio systems having hexagonal and square coverage areas are compared. Comparison is made on the basis of average signal to average interference (\bar{S}/\bar{I}) ...

Kuzuaki Murota and Kenkichi Hirade, "**GMSK Modulation for Digital Mobile Radio Telephony**", *IEEE Transactions on Communications*, vol. 29, no. 7, July 1981 pp. 1044-1050
Summary: This paper is concerned with digital modulation for future mobile radio telephone services. First, the specific requirements on the digital modulation for mobile radio use are described. Then, premod...

Tor Aulin, Nils Rydbeck and Carl-Erik Sundberg, "**Continuous Phase Modulation--Part II: Partial Response Signaling**", *IEEE Transactions on Communications*, vol. 29, no. 3, March 1981 pp. 210-225
Summary: An analysis of constant envelope digital partial response continuous Phase modulation (CPM) systems is reported. Coherent detection is assumed and the channel is Gaussian. The receiver observes the r...

Tor Aulin and Carl-Erik Sundberg, "**Continuous Phase Modulation--Part I: Full Response Signaling**", *IEEE Transactions on Communications*, vol. 29, no. 3, March 1981 pp. 196-209
Summary: The continuous phase modulation (CPM) signaling scheme has gained interest in recent years because of its attractive spectral properties. Data symbol pulse shaping has previously been studied with re...

L. Franks, "**Carrier and Bit Synchronization in Data Communication--A Tutorial Review**", *IEEE Transactions on Communications*, vol. 28, no. 8, August 1980 pp. 1107-1121
Summary: This paper examines the problems of carrier phase estimation and symbol timing estimation for carrier-type synchronous digital data signals, with tutorial objectives foremost. Carrier phase recovery ...

Frank Jager and Cornelis Dekker, "**Tamed Frequency Modulation, A Novel Method to Achieve Spectrum Economy in Digital Transmission**", *IEEE Transactions on Communications*, vol. 26, no. 5, May 1978 pp. 534-542
Summary: This paper describes a new type of frequency modulation, called Tamed Frequency Modulation (TFM), for digital transmission. The desired constraint of a constant envelope signal is combined with a max...

Michael Pursley, "**Performance Evaluation for Phase-Coded Spread-Spectrum Multiple-Access**

Communication--Part I: System Analysis", *IEEE Transactions on Communications*, vol. 25, no. 8, August 1977 pp. 795-799
Summary: An analysis of an asynchronous phase-coded spread-spectrum multiple-access communication system is presented. The results of this analysis reveal which code parameters have the greatest impact on com...

Norman Abramson, "**The Throughput of Packet Broadcasting Channels**", *IEEE Transactions on Communications*, vol. 25, no. 1, January 1977 pp. 117-128
Summary: Packet broadcasting is a form of data communications architecture which can combine the features of packet switching with those of broadcast channels for data communication networks. Much of the basi...

W. van Etten, "**Maximum Likelihood Receiver for Multiple Channel Transmission Systems**", *IEEE Transactions on Communications*, vol. 24, no. 2, February 1976 pp. 276-283
Summary: A maximum likelihood (ML) estimator for digital sequences disturbed by Gaussian noise, intersymbol interference (ISI) and interchannel interference (ICI) is derived. It is shown that the sampled outp...

W. van Etten, "**An Optimum Linear Receiver for Multiple Channel Digital Transmission Systems**", *IEEE Transactions on Communications*, vol. 23, no. 8, August 1975 pp. 828-834
Summary: An optimum linear receiver for multiple channel digital transmission systems is developed for the minimum Pe and for the zero-forcing criterion. A multidimensional Nyquist criterion is defined togeth...

Gottfried Ungerboeck, "**Adaptive Maximum-Likelihood Receiver for Carrier-Modulated Data-Transmission Systems**", *IEEE Transactions on Communications*, vol. 22, no. 5, May 1974 pp. 624-636
Summary: A new look is taken at maximum-likelihood sequence estimation in the presence of intersymbol interference. A uniform receiver structure for linear carrier-modulated data-transmission systems is deriv...

Sergio Benedetto, Girolamo De Vincentiis and Angelo Luvison, "**Error Probability in the Presence of Intersymbol Interference and Additive Noise for Multilevel Digital Signals**", *IEEE Transactions on Communications*, vol. 21, no. 3, March 1973 pp. 181-190
Summary: A new method is presented to compute the average probability of error in the presence of intersymbol interference and additive noise for multilevel pulse-amplitude-modulation (PAM) and partial-respon...

Rudi de Buda, "**Coherent Demodulation of Frequency-Shift Keying with Low Deviation Ratio**", *IEEE Transactions on Communications*, vol. 20, no. 3, June 1972 pp. 429-435
Summary: A coherent binary FSK modulation system is discussed, that has the following properties: 1) it is phase coherent; 2) it has a low deviation ratio, h = \frac{1}{2}; 3) it occupies a small RF bandwidth...

S. Weinstein and Paul Ebert, "**Data Transmission by Frequency-Division Multiplexing Using the Discrete Fourier Transform**", *IEEE Transactions on Communication Technology*, vol. 19, no. 5, October 1971 pp. 628-634
Summary: The Fourier transform data communication system is a realization of frequency-division multiplexing (FDM) in which discrete Fourier transforms are computed as part of the modulation and demodulation ...

Jerrold Heller and Irwin Jacobs, "**Viterbi Decoding for Satellite and Space Communication**", *IEEE*

Transactions on Communication Technology, vol. 19, no. 5, October 1971 pp. 835-848
Summary: Convolutional coding and Viterbi decoding, along with binary phase-shift keyed modulation, is presented as an efficient system for reliable communication on power limited satellite and space channels...

Andrew Viterbi, "**Convolutional Codes and Their Performance in Communication Systems**", *IEEE Transactions on Communication Technology*, vol. 19, no. 5, October 1971 pp. 751-772
Summary: This tutorial paper begins with an elementary presentation of the fundamental properties and structure of convolutional codes and proceeds with the development of the maximum likelihood decoder. The ...

Donald George, Robert Bowen and John Storey, "**An Adaptive Decision Feedback Equalizer**", *IEEE Transactions on Communication Technology*, vol. 19, no. 3, June 1971 pp. 281-293
Summary: An adaptive decision feedback equalizer to detect digital information transmitted by pulse-amplitude modulation (PAM) through a noisy dispersive linear channel is described, and its performance throu...

Paul Wintz and Edgar Luecke, "**Performance of Optimum and Suboptimum Synchronizers**", *IEEE Transactions on Communication Technology*, vol. 17, no. 3, June 1969 pp. 380-389
Summary: The optimum (maximum-likelihood) synchronizer for extracting bit synchronization directly from a binary data stream is presented along with some simple suboptimum synchronizers that perform almost as...

Adam Lender, "**Correlative Digital Communication Techniques**", *IEEE Transactions on Communication Technology*, vol. 12, no. 4, December 1964 pp. 128-135
Summary: A new method for the transmission of intelligence by means of a signal having certain correlation properties has been evolved. The theoretical and practical aspects of this concept are presented. An ...

Philip Bello, "**Characterization of Randomly Time-Variant Linear Channels**", *IEEE Transactions on Communications Systems*, vol. 11, no. 4, December 1963 pp. 360-393
Summary: This paper is concerned with various aspects of the characterization of randomly time-variant linear channels. At the outset it is demonstrated that time-varying linear channels (or filters) may be c...

Edward Arthurs and Harry Dym, "**On the Optimum Detection of Digital Signals in the Presence of White Gaussian Noise-A Geometric Interpretation and a Study of Three Basic Data Transmission Systems**", *IRE Transactions on Communications Systems*, vol. 10, no. 4, December 1962 pp. 336-372
Summary: This paper considers the problem of optimally detecting digital waveforms in the presence of additive white Gaussian noise. A technique for representing the transmitted signals and the additive noise...

J. Hancock and R. Lucky, "**Performance of Combined Amplitude and Phase-Modulated Communication Systems**", *IRE Transactions on Communications Systems*, vol. 8, no. 4, December 1960 pp. 232-237
Summary: The performance of two types of digital phase-and amplitude-modulated systems is investigated for the high signal-to-noise ratio region. Approximate expressions for the probability of error and chann...

J. Costas, "**Synchronous Communications**", *IRE Transactions on Communications Systems*, vol. 5, no. 1, March 1957 pp. 99-105

Summary: It can be shown that present usage of amplitude modulation does not permit the inherent capabilities of the modulation process to be realized. In order to achieve the ultimate performance of which AM...

Some of the many wireless applications of the invention include local-area networks, cellular communications, personal communication systems, broadband wireless services, data link, voice radio, satellite links, tagging and identification, wireless optical links, campus-area communications, wide-area networks, last-mile communication links, and broadcast systems. The invention may be used in non-wireless communication systems, such as guided wave, cable, wire, twisted pair, and/or optical fiber.

Various aspects of the invention are applicable to many types of signal processing. Some of these types of processing include, but are not limited to, transducer-array processing, space-time processing, space-frequency processing, interferometry, filtering, wavelet processing, transform operations, frequency conversion, diversity processing, correlation, channel coding, error-correction coding, multiple-access coding, spread-spectrum coding, channel compensation, correlation, transmission-protocol conversion, security coding, and authentication. Other applications and embodiments of the invention are apparent from the description of preferred embodiments and the claims that follow.

1. CI Coding

Various types and aspects of channel coding may be integrated into CI coding. Channel coding achieves its effectiveness from spreading (i.e., distributing energy corresponding to each information symbol over multiple transmitted symbols) and redundancy (i.e., increasing the transmitted power per information symbol). Spreading typically takes the form of constraint lengths, such as in convolutional coding. In this case, spreading is performed by mapping each data symbol into a code symbol that has a memory of a predetermined number of earlier information symbols. In the case of block codes, spreading can be performed by mapping information symbols into code sets that require more bandwidth or time for transmission than would be required by the uncoded

information. Spreading may take the form of including parity check symbols, or any other type of information about individual information symbols or combinations of information symbols. Redundancy may involve repeating information symbols or mapped information symbols. Redundancy also can involve mapping a predetermined number of information symbols to a larger number of transmission symbols. For example, block codes, convolutional codes, and parity-check codes can provide information redundancy.

Coded symbols are typically mapped into at least one diversity-parameter space. For example, coded symbols may be mapped onto different carriers, such as in CI and OFDM. Coded symbols may be mapped into different time intervals (e.g., time-domain pulse waveforms), such as in TDMA and DS-CDMA. Coded symbols may also be used as space-time codes, polarization codes, or they may be used in any other form of sub-space coding. In particular, information-modulated coded symbols may be transmitted over unique frequency/sub-space combinations.

Methods and systems used to generate CI codes in the present invention are similar to the methods and systems described and illustrated in patent applications 60/259,433 (filed 12/30/2000), 10/131,163 (filed on 4/24/2002), 10/145,854 (filed on 5/14/2002), 09/718,851 (filed on 11/22/2000), and PCT/US01/50856 (filed on 12/26/2001), which are incorporated by reference.

FIG. 1 illustrates a transmitter 100 and a receiver 120 of the invention. The transmitter 100 accepts at least one information signal $si_n(t)$ that is optionally formatted 101 (such as described in B. Sklar, Digital Communications, P T R Prentice Hall, Upper Saddle River, New Jersey, which is incorporated by reference). The other transceiver components shown in FIG. 1, and the functions of those components are also described in Sklar. Transceiver components described in Sklar and not shown in FIG. 1 may be included in variations of the invention. The resulting digital signal is optionally channel coded 102 via any form of channel coding (including CI coding). An optional symbol mapping module 103 is adapted to map the resulting digital signal into transmit symbol values to

be transmitted. The transmit symbol values are sometimes referred to as modulation symbols. For example, the symbols may include a constellation of 2^l values, where l represents some integer number. The symbols may include real and/or complex symbols.

A predetermined number K of the symbols is mapped to a predetermined number N of CI symbol values in a CI code module 105. If N > K, then the symbols may be provided with zero values, such as may be provided by a zero-insertion module 104. Alternatively, the zero-insertion module 104 may be adapted to provide for windowing, coding, or insertion of parity check values, such as to generate a number N of CI code symbols for each set of K input symbols. The CI code module 105 maps the input data symbols to the CI symbol values. The CI code module 105 may include an inverse Fourier transform module, such as an IFFT, an IDFT, or an IOFFT.

A modulator 106 is adapted to modulate the CI symbols onto a plurality of carriers, a plurality of time intervals, a plurality of sub-space channels, or any other diversity-parameter space or combination of diversity parameter spaces. In the case where the modulator impresses the CI symbols onto different frequency carriers, a guard interval or cyclic prefix may be appended to each set of symbols to be transmitted in each symbol interval, as is typically performed in all other multicarrier transmission protocols. The modulator 106 is adapted to perform at least one of a set of all possible modulation types, including phase modulation, amplitude modulation, frequency modulation, polarization modulation, time-offset modulation, beam-pattern modulation, etc. The modulator 106 may provide analog or digital modulation. The modulator 106 may perform PSK modulation, ASK modulation, PAM, QAM, CPM, and/or FSK modulation. The modulator 106 may be adapted to perform either or both analog and digital processing.

A transmitter 107 provides the necessary signal processing operations required to couple the modulated signals into a communication channel. The transmitter 107 may be adapted to perform any type of signal processing performed by communication-system transmitters, including amplification, filtering, frequency conversion, impedance matching, digital-to-analog conversion, and beam forming.

A receiver module 127 includes any receiver components typically adapted to couple a received signal from a communication channel, and adapt the signal for demodulation, as well as other signal processing operations that may be performed in the receiver 120. The receiver module may be adapted to provide amplification, gain control, filtering, frequency conversion, ADC, as well as any other necessary front-end processes performed in prior-art receivers. A demodulator 126 is adapted to convert at least one received modulated signal into a sequence of coded data symbols. The demodulator 126 or CI decoder 125 may be adapted to remove any guard interval or cyclic prefix, as necessary. A CI decoder 125 decodes the coded symbols into a plurality of received transmit symbol values. The CI decoder 125 may optionally include a Fourier transform module, such as an FFT, a DFT, or an OFFT. A symbol mapping module 123 is adapted to convert the received transmit symbol values into a plurality of data bits. An optional decoder 122 is adapted to decode any channel coded data bits. The resulting data bits are optionally formatted 121 to generate signals $si_n(t)$ that are appropriate for output.

In some embodiments employing iterative or otherwise adaptable demodulation and/or decoding, one or more decoding processes may be combined or one or more decoding processes may be combined with demodulation. One or more of the demodulator 126, the CI decoder 125, the mapping module 123, and the decoder 122 may be provided with a decision system, including an iterative feedback decision system, a soft decision system, and/or a hard decision system.

Receivers are typically adapted to synchronize with a received transmission. The receiver of the present invention may be adapted to perform any appropriate type of synchronization. For example, a received signal including at least one preamble may be processed by applying a sliding correlator algorithm to the received signal. The method may include matching at least one stored preamble to the received signal. A receiver, such as the receivers shown and described herein, may include module or systems adapted to perform synchronization, such as timing synchronization (e.g., symbol, frame,

and/or channel synchronization), phase synchronization, frequency synchronization, polarization synchronization, and/or sub-space synchronization.

The transceiver described with respect to FIG. 1 may be adapted to other aspects of the invention described herein. For example, the CI coder may be adapted to generate windowed CI codes, unequally weighted codes, poly-amplitude codes, poly-phase codes, poly-amplitude/poly-phase codes, hybrid CI codes, chirp codes, frequency-shift codes, etc. In some embodiments of the invention, further aspects, adaptations, and variations of the invention, including those described herein may be considered as being incorporated into the transceiver and transceiver methods described with respect to FIG. 1.

In one aspect of the invention, channel estimation is performed for a symbol block received by a receiver over a data channel from a transmitter. The transmitter may be adapted to generate known training symbols or pilot signals. The receiver may be adapted to perform channel estimation based on measurements of known symbols and/or estimates of received data values. The channel estimation produces a channel map that takes into account most recent characteristics and conditions of the channel, as exhibited during a data transmission from a transmitting network node to a receiving network node. It may identify one or more transmission parameters, including modulation type, channel-coding parameter(s), and carriers, to be used in a next data transmission from the transmitter to the receiver on that channel. The channel estimation mechanism attempts to select the highest data rate available and/or the lowest transmission power given the channel conditions. If the requirements of a data rate (e.g., modulation type) in a standard transmission mode cannot be satisfied to ensure reliable data transmission, the mechanism selects a lower data rate, but more robust, transmission mode. Alternatively, a larger number of carriers (i.e., a larger bandwidth) is allocated to the transmission link.

With respect to channel estimation and transmission control, symbols to be transmitted may be mapped into higher-constellation symbols that are transmitted over longer symbol durations. This is referred to herein as constellation/duration processing. For example, as higher constellations are selected to convey data (and thus, increase the number of data

bits conveyed by each of the higher-constellation symbols), the symbol duration of each higher-constellation symbol may be increased to compensate for the greater precision required to identify the symbols. Longer symbol durations allow for more samples corresponding to each transmitted symbol to be collected by a digital receiver. Similarly, longer symbol durations allow for improved performance of matched filters or correlators. The cyclic prefix or guard interval used for each symbol imposes less overhead on the transmission bandwidth efficiency when higher modulation schemes are employed. This improvement in bandwidth efficiency is maintained even when the increased symbol duration cancels the bandwidth-efficiency benefits of the payload when higher-order constellations are used. Thus, in one embodiment of the invention, constellations are selected for a predetermined symbol duration. In another embodiment of the invention, the duration of each symbol is selected relative to the symbol constellation, and optionally, relative to channel conditions. Combinations of adaptations to both symbol durations and symbol constellations may be provided.

Applications of these aspects may be provided to CI communications and chirped waveforms. Applications of these aspects may be provided to conventional communications, such as conventional multicarrier protocols including OFDM, spread OFDM, multicarrier CDMA, OFDM-CDMA, and frequency-hop protocols. Similarly, single-carrier transmissions may be provided with cyclic prefixes or guard intervals to reduce or eliminate the need for RAKE reception and time-domain equalization. Such systems may be employed with adaptable symbol durations and modulation constellations.

Zero values may be added to an information symbol vector prior to mapping the vector to a coded (e.g., CI coded) symbol vector. When the number of information symbol values in the information symbol vector is less than the length of the vector, the coded symbol vector can provide benefits of spreading. Similarly, if the average power per transmitted symbol (i.e., code symbol) is set constant (e.g., the total transmit power of the coded information with zeroes equals the total transmit power of coded information without zeroes), the benefits of redundancy (e.g., increased energy per information bit) are

achieved. The zero values may be appended or prepended to the information symbol vector. Alternatively, the zero values may be interleaved into the information symbol vector. The zero values may also be employed as known values. The zero values may be employed as training symbols. In some embodiments of the invention, zero values may be provided as at least a portion of a cyclic prefix or guard interval.

Multicarrier signals are commonly provided with a plurality of pilot tones for synchronization. In this case, PAPR-reduction codes, such as CI codes, or CI carrier weights w_n, may be applied to the pilot tones. In particular, CI code symbols may be selected so as to provide a superposition of the pilot tones with a low PAPR. Thus, a set of phase offsets may be provided to the pilot tones to reduce or minimize the PAPR of the carrier superposition. Since CI carrier weights are often poly-amplitude, as well as polyphase, it is desirable to select a plurality of carrier weights having a predetermined minimum magnitude that also adequately reduces PAPR. Techniques for selecting the carrier weights may include selecting a coded pulse train (such as generated by a superposition of tones) having low PAPR. In some applications, it may be permissible to have one or more low-magnitude weights. For example, one or more pilot tones may be sacrificed or impeded in order to provide the benefits of low PAPR.

In some embodiments of the invention CI coding of the pilot tones may be performed in the same operation in which data-bearing codes are applied to the carriers. Pilot tones may or may not include at least some of the same carriers as one or more information-bearing signals. Superpositions of pilot tones may be mapped to one or more phase spaces (i.e., pulse positions). Accordingly, pilot-tone pulses may be positioned in a pulse train relative to information-bearing pulses in a way to provide a transmission with low PAPR. Pulses generated from pilot tones may be positioned within headers, in preambles, between packets, and/or within packets at predetermined locations. Pilot-tone pulses may even be implemented for the purpose of transmitting control information. The gain of the pilot tones or pilot-tone superpositions may be adjusted to ensure a low PAPR of the transmission.

FIG. 2 illustrates a CI coding process wherein a plurality K of data symbols $s_k(t)$ are provided with one or more zeros to produce a number N of new data symbols $s_n(t)$ that are mapped to a plurality N of CI symbols $w_n(t)$. Each new data symbol $s_n(t)$ multiplies a column (such as column 201) of an NXN CI code matrix and then each CI symbol $w_n(t)$ is generated by summing all of the elements in each corresponding row (such as row 203). The CI symbols $w_n(t)$ may be provided with weights, such as normalization weights, to provide for a predetermined total transmission power of the CI symbols $w_n(t)$.

In one set of embodiments of the invention, each zero value may indicate one or more sequences of data bits. Thus, the zeros may provide parity checks or provide for conveying certain predetermined patterns in the data, as well as provide for redundancy. FIG. 3 illustrates a zero-valued transmitted data symbol that follows a set of two consecutive same-valued information bits (e.g., consecutive zeros shown in bit stream 301) or transmitted data symbols (e.g., the corresponding consecutive values of -1 in data symbol stream 302). Similarly, zero values may indicate other combinations of information bits and/or transmitted data symbols. Other relationships between information bits and/or transmitted symbols may be conveyed by zeros and/or groups of zeros. In some cases, zero values may be used to transmit information, including data and control information.

Parity-check values, or any other symbols indicating information symbol values or combinations of information symbol values may be integrated into an information symbol vector. FIG. 4 illustrates a CI coding process wherein a plurality K of data symbols $s_k(t)$ are provided with one or more parity check symbols to produce a number N of total data symbols $s_n(t)$ that are mapped to a plurality N of CI symbols $w_n(t)$. Parity check values and/or other values may be added to the information symbol vector in place of, or in addition to the zero values. Low-density parity check values may be employed. Parity-check values and other symbols indicating information symbol values or combinations of information symbol values may be appended, prepended, or interleaved with respect to the information symbol vector.

Windowing, such as frequency-domain filtering or time-domain filtering, may be provided to CI codes, such as basic CI codes. For example, a raised-cosine window may be applied to CI code values as if the code values corresponded to carrier frequencies in a CI-based multicarrier system. Orthogonal codes correspond to the CI code values that produce raised cosine pulses in the carrier-superposition space having a minimum inter-symbol (i.e., inter-pulse) interference. Similarly, any other form of windowing may be applied, such as Bartlet, Hamming, Dolph Chebychev, Gaussian, etc.

Windowing in the code space (i.e., superpositions of the code values) widens the pulse width of the constructive-interference pulses in the carrier-superposition space. This reduces the number of orthogonal pulse positions (i.e., codes). The number of orthogonal pulse positions equals the number of pulses that can fit into a pulse repetition period without inter-pulse (i.e., inter-symbol or multiple-access) interference. In the case of tapered windowing, the number of orthogonal codes is less than the number of code symbols per code. Thus, providing for windowed code-symbol spaces achieves similar benefits (such as spreading and redundancy) as inserting zeroes or parity-check symbols into an information symbol vector prior to coding.

2. Flash OFDM

In PCT application, PCT/US99/02838 (such as on page 6, lines 13-18, and on page 7, lines 27-32), the Applicant describes shifting the frequencies of orthogonal carriers while maintaining the frequency separation that provides orthogonality for the given symbol duration. In the case where superpositions of the carriers are provided, the superposition envelope is unaffected by frequency shifts if the carrier frequency separation and phases are preserved. FIG. 5 illustrates two chirp waveforms separated in frequency by f_s and having a symbol duration of $T_s = 1/f_s$. Coded data symbols, such as CI-coded symbols, may be provided across multiple chirp waveforms.

Chirped waveforms result from any variations (such as linear variations) in frequency with respect to time. The most common chirped waveforms employ linear frequency shifts. Data modulated on a chirped waveform can benefit from frequency diversity, as

well as additional performance benefits in a multipath environment. Chirped waveforms are typically not employed in communications due to the need for analog baseband components, and their associated complexity. Chirped transmitters typically employ voltage-controlled oscillators and receivers require multiple matched filters. A receiver requires a separate matched filter for each desired waveform.

Chirped waveforms would be more applicable to digital communications if a more effective multiple-access scheme was provided and baseband transceiver processes were implemented with simple digital algorithms, such as Fourier transforms.

Orthogonal chirped waveforms are provided by maintaining the same type of frequency separation as required in CI and OFDM. This protocol can be called Orthogonal Chirp Division Multiplexing. Different data symbols or users may be mapped onto different chirps (Chirp Division Multiple Access, or CDMA). Data symbols may be mapped onto polyphase interferometry codes (Chirp Interferometry). A multipath environment introduces time-delayed versions of the received signals, which can be processed in spatial sub-spaces (i.e., Space-Chirp Processing). Similarly, Space-Chirp Coding may be employed wherein channel coding is provided over spatial/chirp channels.

Multiple carrier chirps are provided with the same time-dependent chirp waveforms f(t) separated in frequency by $f_s = 1/T_s$, where T_s is the symbol duration of transmitted data. This provides orthogonality of chirp waveforms:

$$x_n(t) = s(t)e^{i(2\pi(f(f,t)+nfs)t)}$$

Orthogonal chirp waveforms can be filtered or separated by applying CI sampling or the CI OFFT. Similarly, a new form of DFT can be implemented that employs a sampled chirp in place of the usual constant-frequency terms:

$$X(mf_o(t)) = \sum x(nt_o)e^{-in2\pi mf_o(t)t_o}$$

Where $f_o(t)$ is a time-dependent frequency and variable m indicates a particular chirp waveform, such as defined by its start frequency. Similarly, an inverse DFT can be implemented with chirped-frequency terms to map one or more data symbols to

orthogonal chirped-frequency waveforms. Furthermore, other types of transforms, including FFT and IFFT transforms may be implemented with chirped frequency terms.

The present invention may employ a chirp z transform, such as described in U.S. Pat. Nos. 4,994,740, 5,073,752, 5,257,284, 5,388,121, and 6,208,946, which are incorporate by reference in their entireties.

Orthogonal code sequences may be generated from the transforms. For example, the terms $e^{-in2\pi mf_o(t)t_o}$ may be employed as polyphase symbols of orthogonal code sequences for different orthogonal frequency-varying waveforms.

FIG. 6A illustrates a plurality of orthogonal linear-frequency chirps having frequency separations of f_s between chirps. Although the chirps corresponding to (and overlapping in) a symbol interval T_s are not shown with a cyclic prefix, it is a preferred embodiment of the invention to include a cyclic prefix or guard interval prepended to each set of chirp waveforms corresponding to a particular symbol duration. This is particularly preferable when the chirp waveforms are transmitted in multipath environments. Chirp waveforms may be analog or digital waveforms.

The orthogonal chirp waveforms in FIG. 6B do not overlap in any of the symbol intervals. Similarly, it is preferable to include a cyclic prefix or guard interval for each chirp in each symbol interval T_s. The frequency rate-of-change of the chirp waveforms may be adapted to provide for a predetermined number of chirps per symbol interval T_s. Alternatively, predetermined symbol durations may be provided by providing predetermined frequency rates-of-change. This is an important aspect for controlling the symbol duration in constellation/duration processing. For example, higher-order modulations (i.e., larger symbol constellations) may be employed by providing for increased symbol durations while preserving the duration of each cyclic prefix or guard interval. Thus, fewer waveforms, and thus, fewer guard intervals are required. Alternatively, multiple symbol durations (and thus, chirp waveforms) may be employed to transmit higher-order modulations.

FIG. 6C represents classes of other orthogonal frequency-varying waveforms that may be implemented in the invention. These waveforms may include linear chirps. Alternatively, the frequency-varying waveforms may be characterized by non-linear functions. In the case where non-linear functions are employed, the frequency separations fs may be adapted to provide orthogonality. Such adaptations may include scalar or varying frequency separations fs. The waveforms shown in FIG. 6C may include analog (i.e., continuous) or digital waveforms. FIG. 6D illustrates a set of orthogonal digital sequences that provide a set of orthogonal waveforms, as described with respect to FIG. 6C.

FIG. 6E represents classes of orthogonal frequency-varying waveforms that may overlap at one or more locations. The frequency separation between each waveform varies with respect to time.

In FIG. 6F, each set of carrier frequencies (which have frequency separations equal to integer multiple(s) of f_s) assigned to a predetermined user may be hopped to different sets of carriers (which also have frequency separations equal to some integer multiple(s) of f_s). The frequency hops shown correspond to the symbol durations T_s. Alternatively, frequency hops may be provided at integer multiples of the symbol duration T_s. Alternatively, hops may occur at fractions of the symbol duration T_s. In each of these cases, sets of waveforms may be allocated to a particular user or to at least one group of a plurality of users.

FIG. 6G illustrates coding applied to each of a plurality of carriers that are hopped over a plurality of symbol intervals T_s. The carriers may have frequency separations equal to integer multiple(s) of f_s. Coding may include any form of channel coding, multiple-access coding, spreading, and/or encryption. Coding may be provided across time intervals (i.e., hops) as well as (or instead of) frequencies. The characteristics of the hopping patterns may be similar to those described with respect to FIG. 6F. Similarly, hopping may be provided between the orthogonal waveforms shown in FIGs. 6A, 6B, 6C, 6D, and 6E.

Transmission symbols may be coded across orthogonal waveforms, such as chirp waveforms, such as shown in FIGs. 6A, 6B, 6C, 6D, and 6E. Furthermore, the symbols may be coded across multiple symbol intervals.

Any of the classes of chirped waveforms may be combined with CI coding, Constellation/duration processing, inter-cell multiplexing, and/or any of the additional techniques described in this disclosure and the disclosures of the publications that are incorporated by reference.

FIG. 7A illustrates a first CI pulse generated from a superposition of ten linear-chirp waveforms. A first, fifth, and tenth chirped waveform are illustrated with respect to the same time axis illustrated with respect to the CI pulse. The chirped waveforms are orthogonal waveforms. The CI pulse is shown with a reference CI pulse generated from a similar set of (i.e., the set has the same frequency separation, number of carriers) constant-frequency carriers. The pulses and chirped waveforms (i.e., the carriers) are illustrated within a symbol interval T_s corresponding to the inverse of the frequency separation f_s of the chirped waveforms. In this case, the chirped waveforms are provided with a first set of phases that results in phase alignment of the waveforms at a first predetermined instant in time. The resulting superposition pulse is centered at that time instant.

FIG. 7B illustrates a second CI pulse generated from a superposition of the same ten linear-chirp waveforms shown in FIG. 7A. The first, fifth, and tenth chirped waveforms are illustrated with respect to the same time axis illustrated with respect to the CI pulse. The CI pulse is shown with a reference CI pulse generated from a similar set of (i.e., the set has the same frequency separation, number of carriers) constant-frequency carriers. In this case, the chirped waveforms are provided with a second set of phases that results in phase alignment of the waveforms at a second predetermined instant in time. The second pulse is centered at that time instant.

The pulses shown in FIGs. 7A and 7B represent polyphase coding provided to the chirped waveforms that produces substantially orthogonal pulse positions. Thus, the phase codes are substantially orthogonal. Each pulse may correspond to a particular data symbol used by a single user. In this case, a set of chirped waveforms may be allocated to a particular user. Alternatively, a plurality of users may share the same set of chirped waveforms and the orthogonal codes may be employed for multiple access. In any of these cases, as well as any variations of these cases, a cyclic prefix or guard interval (not shown) may be provided to the chirped waveforms and/or the resulting pulses or pulse streams.

In the case where multiple pulses are generated within a given symbol interval T_s, the coding provided to the carrier may be characterized by a combination of polyphase and poly-amplitude carrier weights or codes. Alternatively, pulse waveforms may be stored in memory and provided with time offsets. The pulses and or the carriers may be modulated with information symbols to be transmitted. Similarly, information may be embedded in the coding provided to the carriers.

FIG. 7C illustrates basic components of a transmitter 700 and a receiver 720 that may be used to provide communication on chirped waveforms. Information symbols may be transmitted on either individual chirped waveforms, or the symbols may be spread over multiple chirped waveforms via coding. Coding may include channel coding, spread-spectrum coding, and/or multiple-access coding.

In the transmitter 700, a data processor 701 provides appropriately formatted information in the form of data bit s or data symbols to an optional coder 702. Information may include headers, preambles, control bits, training symbols, feedback information, and/or other types of system-control information, in addition to any digital (e.g., data) or analog (e.g., voice) payload. The coder 702 may provide error-correction coding or some other type of channel coding. For example, convolutional coding may be provided to data bits. Similarly, spreading or multiple-access coding may be provided. Any combination of bit coding and modulation-based symbol processing may be provided by the coder 702.

Coded data symbols are input to a chirp generator 703. The chirp generator 703 may provide a digital chirp transform function adapted to map the data symbols onto chirped waveforms. The chirp transform function may be similar to an inverse Fourier transform function. In particular, the transform function may be adapted to produce a time-domain signal. Furthermore, the chirp generator 703 may provide coding. The output of the chirp generator 703 may be an analog (continuous) or digital signal. A prefix inserter 704 is adapted to prepend a cyclic prefix or guard interval to the chirp waveforms or superposition signal produced by the chirp generator 703. A transmission system 705 is typically provided for converting a baseband or IF signal into a signal that is appropriate for transmission in a communication channel. Thus, transmission systems may include a variety of signal-processing elements, including D/A converters, filters, frequency converters, amplifiers, modulators, impedance matching circuits, array-processing circuits, channel estimation circuits, channel compensation (e.g., predistortion) circuits, system-control processors, power-control circuits, etc.

The receiver 720 includes a receiving apparatus 725 adapted to couple transmissions from a communication channel and adapt the received signals for processing by other signal processing modules in the receiver 720. Thus, the receiving apparatus 725 may include a variety of signal-processing elements, including amplifiers, filters, AGCs, A/D converters, frequency converters, demodulators, array processing systems, channel compensation systems, system-control processors, symbol mapping modules, synchronization systems, feedback loops, etc. Signals output by the receiving apparatus 725 may be analog or digital signals.

A prefix remover 724 is adapted to remove any guard interval or cyclic prefix on the received chirped waveforms. A chirp processor 723 extracts and/or estimates information impressed on the chirped waveforms. The chirp processor 723 may be adapted to perform a chirp transform operation similar to a Fourier transform operation to obtain symbol values impressed on the chirp waveforms. The chirp processor 723 may be adapted perform decoding. An optional decoder 722 processes received coded data symbols or data bits to produce uncoded data symbols or data bits, or estimates of data symbols or

data bits. Decoding may include hard or soft decision processes. A data processor 721 formats the data as necessary for output.

A method and apparatus for performing constellation/duration processing is illustrated in FIG. 8. A data-mapping module 801 converts each set of data bits to a data symbol having a predetermined or adaptable constellation of values. The number of data bits mapped to a data symbol and the number of constellation points are typically set relative to one another. The data symbols are processed by a serial-to-parallel processor 802 to generate a plurality of parallel data symbols to a transform module 803. The transform module 803 is adapted to map (or otherwise impress the data symbol values) to orthogonal signal waveforms. The signal waveforms may include multicarrier waveforms, such as OFDM, MC-CDMA, spread OFDM, CI, CDMA-OFDM, multicode OFDM, or any other well-known multicarrier signals. Similarly, the multicarrier waveforms may include chirped waveforms, coded chirped waveforms, or in particular, CI-coded chirped waveforms. Coded chirped waveforms may include adaptations of MC-CDMA or spread-OFDM to orthogonal chirped waveforms or CI-coded waveforms. Furthermore, multicarrier waveforms may include space-time, space-frequency, or additional forms of diversity-parameter spaces and signal sub-spaces. The output of the transform module 803 is typically at least one time-domain signal.

The output may be characterized by sub-space, or coded subspace signals. In this case, the transform module may be coupled to a coded sub-space transmitter or an array of transceiver elements. Appropriate spatial and/or sub-space processing is preferably provided at the corresponding receiver(s) of the transmitted signals.

A constellation selector 811 is adapted to work in conjunction with a symbol duration selector 813. The constellation selector 811 selects data symbol constellations, including all of the parameters thereof, including constellation size, constellation spacing, and the bit-to-symbol mapping algorithms and/or tables. The function of the constellation selector 811 may be adapted with respect to any of various performance measurements, including channel estimates, probability of error, SNR, SNIR, BER, etc. Accordingly, an

optional channel estimation processor 812 may be coupled to the constellation selector 811 and the symbol duration selector 813. The function of the constellation selector 811 and the symbol duration selector 813 may be dynamically adapted to changing channel conditions, data-rate requirements, transmission types, subscriber services, power control, multiplexing/multiple access, and link priority.

The symbol duration selector 813 provides a predetermined transmit symbol length relative to the constellation size selected. The symbol length may also be adapted relative to other factors, including receiver performance, network control, subscriber services (e.g., bandwidth requirements, error tolerance, and/or latency tolerance), transmission power, etc. In some of the cases of chirped-waveform transmissions, the duration of each waveform may be adjusted with respect to required symbol length. In the case of transmissions employing orthogonal waveforms having a fixed frequency separation f_s, a transmit symbol length may correspond to an integer multiple of the symbol durations (T_s) corresponding to the frequency separations f_s, as shown in FIG. 8B.

FIG. 8B illustrates a set of symbol lengths corresponding to each of a plurality of symbol constellations. In this case, the symbol lengths are proportional to the number of constellation points in the corresponding symbol constellation. Alternatively, different proportions between symbol length and the number of constellation points may be provided. A constellation characterized by two possible symbol values (i.e., constellation points) has a symbol length equal to the symbol duration T_s plus a cyclic prefix duration t_{cp}. A symbol constellation corresponding to four values has a symbol length equal to twice the symbol duration T_s plus a cyclic prefix duration t_{cp}. In this case, the overhead of the cyclic prefix duration t_{cp} relative to the data payload is only half of the relative overhead in the case of the constellation with four values. As the symbol length increases, the relative overhead due to the cyclic prefix (or guard interval) gets smaller.

Although the invention is shown with respect to scaling the symbol length relative to constellation size, the invention may adapted to other functions. For example, the constellation size may be adapted independently of the symbol length. The symbol length

may be adapted relative to a fixed constellation size. Adaptations of either the symbol length or the constellation size may be made with respect to adjusting or maintaining a predetermined transmit power per data bit or symbol. Adaptations may be made relative to changing channel conditions, power control, variable data rates, different subscriber services, different link characteristics, network control, frequency use, interference, and/or priority. In some embodiments of the invention, symbol length and/or constellation size selections and adaptations may be provided to each carrier independently. In various embodiments of the invention, frequency separations f_s and symbol durations T_s may be adapted.

FIG. 9A illustrates a communication link employing transceivers of the present invention. A data source 901 provides optionally formatted data symbol or data bits to an optional coder 902. The coder 902 may provide channel coding of data bits, spreading, and or multiple access. A coder, such as coder 902, may map groups of data bits into data symbols. Coded data is coupled into a transform circuit 903 adapted to provide coded data and/or waveforms that convey the coded data. The transform circuit 903 may be adapted to map data symbols to CI codes, chirp codes, CI waveforms, and/or chirp waveforms. An optional pre-equalizer module 904 may be adapted to provide channel-compensation equalization to the symbol values and/or waveforms generated by the transform circuit 903. Equalization may take the form of frequency-domain equalization, time-domain equalization, and/or equalization specific to the signal space of the generated symbol values and/or waveforms. A transmitter module 905 provides for adaptation of an input baseband or IF signal for transmission into a communication channel 901.

A receiver module 915 is adapted to couple transmitted signals from the communication channel 901 and adapt the received signals for baseband and/or IF processing. An optional equalizer 914 may be employed to compensate for channel effects. A transform circuit 913 is adapted to complement the transform performed on the transmit side. An optional equalizer 912 may be employed after the transform circuit 913 to compensate for channel effects. A multi-user detector 957 may optionally be employed. A decision

module 956 is adapted to estimate transmitted data bits. The decision module 956 may be adapted to perform any combination of hard decision, soft decision, and iterative feedback functions.

FIG. 9B illustrates basic components that may be employed in a frequency-domain equalizer, such as possible embodiments of the equalizers 904, 912, and 914 shown in FIG. 9A. A transform module, such as an FFT 921, separates an input time-domain signal into a plurality of frequency components. The components may be processed in a filter 922 adapted to provide a predetermined or adaptive gain profile to the components. An inverse transform module, such as an IFFT 923 is adapted to convert the filtered components back to a time-domain signal.

FIG. 9C illustrates basic components of a possible embodiment of the transform circuit 903. A chirp-transform code generator 931 is adapted to produce at least one of a plurality of orthogonal codes based on a chirp transform. A code allocation module 932 is adapted to allocate at least one code to at least one communication link. A data modulator 933 is adapted to impress at least one data symbol onto at least one code. Alternatively, data symbols may be impressed onto signals processed in the transform code generator 931 to produce information-bearing codes.

FIG. 9D illustrates a transceiver of the invention. A cyclic prefix prepend module 944 is included on the transmitter side of the transceiver. However, the functionality of the module 944 may be incorporated into the transmitter module 905 illustrated in FIG. 9A. A cyclic prefix removal module 954 is shown on the receiver side of the transceiver. Similarly, cyclic prefix removal may be provided in the receiver module 915 shown in FIG. 9A.

3. Inter-cell Multiplexing

In one embodiment of the invention, cellular communications may be provided with multicarrier transmission protocols mentioned and disclosed herein and described in the

publications incorporated by reference. In a cellular system, or in any system employing at least one form of spatial multiplexing or spatial division multiple access, individual carriers may be allocated to a particular user in each cell or geographical sector in a communication network.

In one aspect of the invention, each carrier in a set of carriers allocated to a particular user in a particular geographical area (e.g., a cell or a sector) is shared by at most one other user in a potentially interfering (e.g., nearby) geographical area. In a related aspect of the invention, no more that one carrier is shared between two potentially interfering users. For example, if a number n of carriers allocated to a particular user experiences interference from other users, there are n interfering users. Alternatively, some number other than one may be selected as the maximum number of carriers shared by any pair of users. Alternatively, the upper limit on the number of users sharing a predetermined number of carriers may be selected to be a number that is greater than two. Furthermore, the invention provides for allocation of carrier frequencies to users depending on their geographical locations. For example, carriers may be assigned to each user based upon their relative positions in a defined geographical region and/or their positions in neighboring geographical regions.

The terms neighboring and nearby may be used interchangeably, and are meant to convey the idea of cells sharing the same border of a particular cell of interest (i.e., a subject cell), and may include other cells that are nearby (such as to potentially provide a source of interference to the subject cell), but do not necessarily share the same border with the subject cell.

In one aspect of the invention, each base station or equivalent system is provided with a predetermined set of carriers for allocation to users in the cell. It will be appreciated that descriptions herein relating to cells also pertain to sectors, or other spatial (e.g., geographic) regions in a communication network. The set of carriers is preferably provided with respect to carriers provided to neighboring cells. For example, carriers may be allocated to each of a plurality of neighboring or nearby cells in order to minimize

interference on each carrier. Thus, a predetermined number of cells within a group of neighboring or nearby cells may share a predetermined number of the available carriers.

One or more carriers may be allocated throughout the neighboring or nearby cells such as to eliminate and/or greatly reduce the possibility of inter-cell co-channel interference. For example each of a plurality of carriers may be allocated to only one cell in a group of neighboring or nearby cells. Each of a plurality of carriers may be allocated to a predetermined plurality of (e.g., two) cells to allow for a small amount of inter-cell interference. The choice of which cells share which frequencies (especially with respect to how the frequencies are allocated to users within each cell) may be made in such a way as to minimize inter-cell interference. With respect to sectors or spatial division multiple access channels (including sub-space channels), the objective is to reduce or minimize inter-sector or co-channel interference. In a preferred aspect of the invention, each user is assigned carriers in such a way as to reduce or minimize interference from users in nearby or neighboring cells. For example, the assigned carriers may be subject to interference from users in a plurality of nearby or neighboring cells. Thus, the interference is more likely to be uncorrelated interference. Also, interference from a user in a nearby neighboring cell interferes with only a small number of a particular user's carriers. The particular user also has carriers that experience low interference due to those carriers being shared by more-distant users (e.g., users in neighboring cells that are farther away) and/or carriers not being shared by any users in the group of neighboring cells. The number of shared carriers per user per cell may be selected relative to geographical conditions (e.g., terrain, distribution of users in a cell, etc.), channel conditions (multipath, co-channel interference, etc.), link priority, characteristics of subscriber services (e.g., tolerance to latency, tolerance to distortion), channel bandwidth, spectrum allocation, spectrum sharing, and/or predicted and/or measured receiver performance.

In another aspect of the invention, each base station or equivalent system is adapted to dynamically allocate carriers for users in the cell. Each cell may be provided with a predetermined set of carriers that a base station selects for allocation to each user in the

cell. Allocation of the carriers to each user may be based on any of a number of parameters, including any of the following parameters:

- Link channel conditions to/from each user. For example, carriers may be selected for each user so as to avoid deep fades, since different users are likely to experience different multipath channels.
- Required link data rates, or channel bandwidth. For example, the number of carriers, as well as the carrier bandwidths may be selected relative to the required throughput.
- Channel bandwidth. For example, each user may be provided with a set of carriers distributed over a predetermined frequency band such that the set spans a bandwidth equal to or greater than the coherence bandwidth of the channel. Similarly, the carriers may be selected such that the spacing between the carriers equals, or is greater than, some predetermined bandwidth, such as the coherence bandwidth of the channel. Different links are likely to have different coherence bandwidths.
- Type of communications (e.g., voice, data, video, multimedia). Different types of communication are sensitive to different types of link performance. For example, voice communications can tolerate relatively high distortion, noise, and interference. Data communications can typically tolerate latency.
- Doppler effects. For example, Doppler effects may de-orthogonalize narrowband carriers allocated to different users experiencing different Doppler shifts. Thus, in some applications, it may be preferable to avoid allocating contiguous carrier frequencies to a plurality of users characterized by different Doppler shifts, particularly users that are located with respect to each other and/or with respect to a base station such that interference may occur due to the Doppler shifts.
- Geographical distribution of users within a cell. Frequency reuse within a cell may be provided via spatial division multiplexing. Interference mitigation and reduction of distortion may be provided by recording and anticipating the types of channel conditions (e.g., multipath fading, delay, fast fading, shadowing) users are likely to encounter in certain geographical locations. Thus, carrier selection may be part of a predistortion or interference-mitigation process. Similarly,

different sets of frequencies may be allocated to different geographical locations within a cell.

- Geographical distribution of users in neighboring or nearby cells. Frequency selection in each cell may be adapted with respect to frequencies allocated to users in nearby cells, such as to minimize or avoid interference. Furthermore, the geographical locations of users in other cells may be considered with respect to allocating frequencies to at least one user in a particular cell of interest in order to mitigate the effects of interference. For example, a user may be provided with one or more carriers with respect to that user's location relative to the location of one or more users in other cells that may share (or otherwise interfere with) at least one of the user's allocated carriers.

In yet another aspect of the invention, sets of carriers provided to each cell for allocation the users in the cell may be transferred between cells. In some cases, carriers or carrier sets may be exchanged between cells. The criteria for transferring carriers between cells are similar to the criteria for allocating carriers in each cell to users in the cell. Carrier transfers may be made to mitigate the effects of interference, provide improved load balancing in a network of cells, scale to changing demands for resources in each cell, and facilitate efficient frequency-reuse patterns. This aspect of the invention may provide for overlapping service areas (i.e., cells) and assist in dynamic resectorization of the cellular architecture. Dynamic resectorization may include selecting and adapting boundaries between cells and/or implementing micro-cells as necessary. Consequently, inter-cell and/or intra-cell carrier allocations are anticipated to be an integral part of hand-off procedures between cells, including soft hand-offs. Thus, in some embodiments of the invention, neighboring cells may share at least some of the same carriers that are allocated to users near their common cell boundaries. Furthermore, carrier allocation between cells may be an integral part of a process known as dynamic spectrum allocation.

FIG. 10A illustrates a set of 12 carrier frequencies that can be allocated to a plurality of users in each of a plurality of (up to eight) cells. Each column corresponds to a cell, and

each of the four different numbers in each column corresponds to a frequency allocation of a user in the cell. Thus, user 1 in the first cell is allocated frequencies f_0, f_4, and f_8. It is apparent that other patterns, such as non-repeating patterns relative to each cell, may be employed.

FIG. 10B illustrates the set of allocated frequencies f_0, f_4, and f_8 corresponding to user one in cell one. Frequencies allocated to other users in neighboring cells are also shown. In this case, each frequency corresponding to user one in cell one is shared by only one user in a neighboring cell. In this case, the users that share one of the frequencies allocated to user one in cell one do not share the same cell.

It will be appreciated that the various embodiments and aspects of inter-cell multiplexing described previously may be implemented with chirped carriers or other types of waveforms. For example, in the case where linear chirped waveforms are provided, users may share chirp rates and/or chirp frequencies.

4. Dynamic Spectrum Allocation

a. Users are allocated different numbers of carriers with respect to individual user BW requirements. Similarly, the bandwidth of one or more carriers used by each user may be selected with respect to BW requirements. Coding parameters, such as code rate, constraint length, constellations, etc. may be adapted to transmission and/or reception parameters, including, but not limited to, bandwidth, priority, transmission information type, receiver performance (e.g., BER, P(e), confidence measure, etc.), channel conditions (i.e., SNR, multipath, co-channel interference, etc.).
b. Each user's carriers are distributed over different system channels.
c. Different systems share or exchange radio-channel resources (e.g., spectrum).
    i. Static allocation: each system divides its spectrum into frequency channels and allocates some of the channels to other systems in exchange for channels from other users.

ii. Dynamic allocation: each system provides some of its spectrum to users in other systems based on spectrum availability and/or spectrum lease. A system may tolerate additional MAI to provide the exchange.

d. Users are dynamically allocated carriers of different frequencies with respect to channel conditions, which may be determined via channel estimation. Since channel conditions change relative to time as user locations change, dynamic channel allocation may be performed relative to time-dependent criteria.

The input bit stream is coded (e.g., convolutionally encoded) with a predetermined code rate R prior to being interleaved and punctured.

Non-uniform CI codes.

CI coding, such as CI codes applied to frequency-domain carriers, may be used for multiple access or in single user systems. Similarly, CI coding applied to other diversity parameters, including sub-space processing or sub-space coding, may be employed in single user or multiple-access systems. In particular CI may be applied to single-user channels employing a separate means (e.g., frequency division multiplexing, time division multiplexing, code division multiplexing, spatial division multiplexing, or any other multiplexing protocol) of multiple access.

Each set of CI symbols, wherein a set is identified as a group of symbols applied to multiple carriers within a symbol interval, are typically provided with a guard interval, or cyclic prefix, as is typically done in all multicarrier transmission protocols. However, inter-symbol interference may occur in a multicarrier CI system due to the combination of multipath effects and CI spreading. Inter-symbol interference occurs in the single-user case. Additionally, multiple-access interference may occur in the multiple-access case where CI-coded carriers provide for multiple access. Thus, the frequency-domain channel transfer function of a CI system with a single antenna can be modeled with a MIMO flat fading matrix. Consequently, any of various techniques, such as matrix reduction or successive interference cancellation (e.g., BLAST), may be employed. The frequency-

domain channel transfer function may also be adapted to multi-antenna systems. Thus, the resulting transfer function may characterize dimensions of space and frequency. Solutions for spatial processing with multiple antennas may be combined with solutions to the frequency-domain inter-symbol interference solutions.

The successive interference cancellation algorithms provides for sequential detection of symbols in each received set. Each step involves detecting, or estimating, a symbol and then subtracting it from the received signal set. This technique reduces interference for the next symbol to be detected/estimated. Thus, it is desirable to first process symbols on carriers having the highest reliability (e.g., high SNR). In a preferred embodiment of the invention, data symbols are non-uniformly spread over the carriers. Thus, a particular carrier corresponds to a particular data symbol more than the other symbols. Each data symbol has an association with a particular carrier that conveys the data symbol with a greater valued weight with respect to other data symbols. In some applications, more than one data symbol may be coded with preference to a particular carrier. In some applications, more than one carrier may provide preference to one or more given data symbol.

Non-uniform coding is indicated by the following CI code:

$$C_{nu} = \alpha I + (1-\alpha)C$$

The non-uniform CI code matrix C_{nu} includes an identity matrix I (a matrix of zeros except for a diagonal of ones) weighted with some predetermined weight α (which may be determined or adapted relative to directly or indirectly measured channel conditions) and a weighted CI code matrix C. The CI matrix C may be any type of CI matrix, such as a matrix of basic CI codes, an advanced CI code matrix, or a hybrid CI code matrix. A transmitter may set the value of α based on training symbols or pilot tones. Similarly, the value of α may be set with respect to measured receiver performance, such as probability of error, SNR, BER, etc. Alternatively, the matrix αI may be provided with non-uniform diagonal elements. The values of the diagonal elements may be selected and/or adapted relative to channel conditions, such as flat fading on each carrier frequency. In other applications, the matrix αI may be provided with non-zero non-diagonal, or cross terms.

In a preferred embodiment of the invention, the identity matrix I is replaced by the following diagonal matrix of complex terms:

$$\begin{bmatrix} x_1 + iy_1 & 0 & \cdots & 0 \\ 0 & x_2 + iy_2 & \cdots & 0 \\ \vdots & \vdots & \ddots & 0 \\ 0 & 0 & \cdots & x_N + iy_N \end{bmatrix}$$

The complex terms $x_n + iy_n$ may be selected to reduce the peak-to-average-power ratio (PAPR) of the transmitted multicarrier signal. Any technique for reducing the PAPR may be employed with respect to the selection of the complex terms. In one aspect of the invention, CI codes corresponding to a predetermined pattern and shape of pulses are employed in the set of complex terms. In another aspect of the invention, adaptive algorithms may be used to reduce or minimize the PAPR.

It should be appreciated that other variations and adaptations to the spreading may be made to provide for non-uniform spreading. For example, any appropriate set of poly-amplitude codes may be employed for spreading. Some classes of CI codes characterized as poly-amplitude may be provided. Similarly, other types of poly-amplitude codes or combinations of codes may be employed to provide for non-uniform spreading.

Data symbols to be transmitted may include coded data symbols. Coding may take the form of convolutional, block, parity check (e.g., low-density parity check), iterative feedback, CI, or any combination of coding. Other forms of coding may be implemented. Some data symbols may be mapped with preference to particular non-uniform CI codes or carriers. For example, parity-check values may be mapped to carriers having superior performance of a predetermined group of carriers.

Any of the available detection schemes appropriate for a MIMO flat fading channel model may be employed. One such scheme includes successive interference cancellation, such as described as follows:

1. Equalize received signals

2. Decode signal with highest SINR (e.g., provide soft decision)
3. Estimated signal is subtracted from received signals
4. Return to step 2

FIG. 11 illustrates a CI coding algorithm adapted to produce a non-uniform spreading of input data symbols $s_n(t)$ to generate a plurality of coded weights $w_n(t)$. In this case, the non-uniform spreading is provided by including scalar constants in the elements of a complex CI code matrix. Different values for the constants (including complex values), as well as a different distribution of the constants throughout the matrix, may be provided without departing from the scope of the invention. Each constant may have a unique value. The input data symbols $s_n(t)$ may include zeros and/or parity-check values. The coded weights $w_n(t)$ may be impressed on any set of orthogonal diversity-parameter values, including subspaces.

FIG. 12A illustrates the functionality of a receiver adapted to process and decode CI-coded signals, including non-uniformly spread CI signals. A receiver system processes a received signal to provide an appropriate baseband or IF signal for processing by digital signal processing components in the receiver. Any cyclic prefix or guard interval prepended to the transmitted signal is removed. Any necessary filtering and/or equalization my optionally be performed in a separate step or module prior to being decoded.

The function of a decoder employing successive interference cancellation is illustrated in FIG. 12B. A SINR is measured for each sub-carrier (i.e., carrier) or sub-channel. The signal with the best SNIR is decoded and provided with a hard or soft-decision output. The estimated interference resulting from the estimated symbol is then subtracted from any remaining subcarriers. The signal with the next best SNIR is processed in the same manner until all of the signals have been processed. Techniques for performing channel estimation, such as processing received known training symbols ad/or blind adaptive processing may be provided in the receiver.

Further adaptations to aspects and embodiments disclosed throughout the specification may include:

1. A plurality of tones assigned to the coded bits of an application is a subset of available tones.
2. A step of generating coded application bits is done for a plurality of users; and a step of transmitting the complex time-domain samples on a common channel includes a step of synchronizing transmissions among the plurality of users with respect to a destination receiver.
3. A channel used is a multipoint-to-point uplink channel.
4. The method described in number 2 further comprising the steps of:
    a. receiving the complex time-domain samples for each application from the common channel using a discrete multi-tone modem;
    b. transforming the complex time-domain samples to multi-tone symbols using a discrete Fourier transform;
    c. decoding the multitone symbols for each application into coded application bits for each application at a receiver using the plurality of tones assigned to the coded application bits; and
    d. decoding the coded application bits for each application.
5. The method according to number 4 wherein the step of generating decoded application bits is done for a plurality of users.

12. Scope of the Invention

In the preferred embodiments, several kinds of carrier interferometry, coding, filtering, and spatial processing are demonstrated to provide a basic understanding of applications of CI processing. With respect to this understanding, many aspects of this invention may vary. For example, signal spaces and diversity parameters may include redundantly modulated signal spaces. Descriptions of spatial processing may be applied to processing methods for non-spatial diversity parameters. Descriptions of systems and methods using spatial subspaces may be extended to systems and methods that use non-spatial subspaces.

For illustrative purposes, flowcharts and signal diagrams represent the operation of the invention. It should be understood, however, that the use of flowcharts and diagrams is for illustrative purposes only, and is not limiting. For example, the invention is not limited to the operational embodiment(s) represented by the flowcharts. The invention is not limited to specific signal architectures shown in the drawings. Instead, alternative operational embodiments and signal architectures will be apparent to persons skilled in the relevant art(s) based on the discussion contained herein. Also, the use of flowcharts and diagrams should not be interpreted as limiting the invention to discrete or digital operation. Furthermore, functionality illustrated in flow charts may imply functionality of an apparatus of the invention that is not shown. Similarly, descriptions of any apparatus may be used to define one or more methods of the invention.

In practice, as will be appreciated by persons skilled in the relevant art(s) based on the discussion herein, the invention can be achieved via discrete or continuous operation, or a combination thereof. Furthermore, the flow of control represented by the flowcharts is provided for illustrative purposes only. As will be appreciated by persons skilled in the relevant art(s), other operational control flows are within the scope and spirit of the present invention.

Exemplary structural embodiments for implementing the methods of the invention are also described. It should be understood that the invention is not limited to the particular embodiments described herein. Alternate embodiments (equivalents, extensions, variations, deviations, combinations, etc.) of the methods and structural embodiments of the invention and the related art will be apparent to persons skilled in the relevant arts based on the teachings contained herein. The invention is intended and adapted to include such alternate embodiments. Such equivalents, extensions, variations, deviations, combinations, etc., are within the scope and spirit of the present invention.

Signal processing with respect to sinusoidal oscillating signals are described herein. Those skilled in the art will recognize that other types of periodic oscillating signals that can be used, including, but not limited to, sinusoids, square waves, triangle waves, wavelets, repetitive noise waveforms, pseudo-noise signals, and arbitrary waveforms.

The foregoing discussion describes the preferred embodiments of the present invention. With respect to the disclosure, it should be understood that changes can be made without departing from the essence of the invention. To the extent such changes embody the essence of the present invention, each naturally falls within the breadth of protection encompassed by the disclosure of this patent application. This is particularly true for the present invention because its basic concepts and understandings are fundamental in nature and can be broadly applied.

1 1.0 Cover Sheet

2 Identification and Significance of the Opportunity

The need for better spectrum efficiency is one of the most significant issues for both commercial and military communications. Poor spectrum utilization is a particularly serious problem for combat communications because access to the network can be most critical to the warfighter in tactical situations that push the network to full capacity.

Tactical operations are often conducted in remote areas, such as borders or coastlines, where terrestrial infrastructure is not in place. Similarly, emergency response for homeland defense, as well as relief and rescue operations, are likely to occur where terrestrial communication infrastructure has been disabled. Reliable communication to headquarters as well as with other posts is absolutely essential. However, when networks need to be set up quickly and the number of users in the network is highly variable, conventional multiple-access schemes do not provide adequate bandwidth efficiency.

2.1 Interference and Spectrum Sharing

A primary limit to network capacity is multiple-access interference (MAI) between network users. Signal distortion, such as multipath interference, degrades the orthogonality of multiple-access channels in conventional transmission protocols, such as time division multiple access (TDMA) and code division multiple access (CDMA). Poor signal quality resulting from MAI is typically compensated by increasing the transmit power (thus, increasing MAI for other users) or implementing channel coding (which reduces bandwidth efficiency). MAI not only restricts network access, it greatly reduces range, and increases required transceiver power (thus, reducing battery life).

Any spectrum-sharing approach between networks will need to mitigate interference between users within each network, and then mitigate interference occurring between networks. Efficient use of the spectrum within each network frees up more unused spectrum to be shared with outside users.

It is desirable to implement dynamic frequency allocations to reduce MAI and improve spectrum-sharing. However, such spectrum-sharing techniques need to be adapted to current multiple access schemes and multipath channels to optimize bandwidth efficiency. Improved bandwidth efficiency will enable tactical and crisis-response communications to achieve the following benefits:

1. Available anywhere, with high reliability and performance
2. Easily extendable for missions in foreign countries
3. Combination of all services - data, voice, video
4. Added transmission security
5. Cost-effective through bandwidth and service sharing

2.2 Basic Wireless Exchange Solution

To capitalize on the idea of a wireless bandwidth exchange between two or more wireless networks, an enabling multiple-access technology must be developed at the physical layer. Considering two networks, *A* and *B*, that want to embark on a shared exchange, a multiple access technology should be designed that performs the following:

- The multiple-access technology must make the best use of the spectrum licensed for use by its subscribers; That is, it must support a maximum number of users while maintaining minimum requirements on throughput and QOS.
- When one of the wireless networks is oversubscribed, the multiple-access technology begins to borrow bandwidth from the spectrum licensed to at least one other network. This borrowing of bandwidth: (a) allows a network to support more users and (b) minimizes each network's use of the bandwidth assigned to other networks.
- When a wireless network is under subscribed, the network does not use all of its available bandwidth, allowing it to lend out its spectrum to user of other networks.

In this way, the wireless networks can best meet their users' demands, generate additional revenues, and best use the limited wireless resource licensed to them.

This idea can be taken one step further. In a cost saving effort, rather than have one network borrow spectrum from another, each network may first look to use unlicensed spectrum. Clearly, such a wireless multiple-access technology would (1) be able to operate on non-contiguous frequency bands; and (2) adapt its bandwidth usage to correspond to the numbers of users connected to the system.

2.3 Wideband Wireless Exchange Solution

Taking the idea of wireless exchange one step further, wireless networks could achieve better use of the spectrum they license from the FCC in the following manner. Consider eight networks, each having a different 5 MHz piece of the wireless spectrum. Together, they own 40 MHz of non-contiguous spectrum over 8 separate bands. We suggest that, rather than having each of the 8 networks operate over their own spectrum, the users of each network use wireless devices capable of operating over all 8 of the spectrums simultaneously. Thus, each network has access to $1/8^{th}$ of the wireless resource; each can "lend out" some of their resource when they are under subscribed; and each can "borrow" some of the available resource when they are oversubscribed. In this way, limited wireless resources can be used more effectively. Even greater benefits can be had if the eight networks include an unlicensed band in their spectrum.

To accommodate such a sharing of the wireless spectrum, an underlying wireless technology must once again be developed capable of using non-contiguous bands of the frequency spectrum in an optimal way.

2.4 Enabling Multiple Access Techniques for Wireless Exchange

Regardless of whether the wireless exchange allows two networks to share spectrum or a multitude of networks to create a broadband exchange, an enabling multiple-access technology must be designed that best supports this sharing. For the wireless exchange to succeed, the underlying multiple-access technology must be capable of (1) operating over non-contiguous frequency bands, (2) adapting its bandwidth usage based on the number of users employing the system, and (3) making optimal use of the wireless spectrum in terms of numbers of users supported and the probability-of-error performance of each user.

Three multiple access technologies are available to support the wireless exchange: CDMA (code division multiple access), TDMA (time division multiple access), and FDMA (frequency division multiple access). CDMA, despite its introduction decades after its TDMA and FDMA predecessors, has leaped to the forefront of wireless multiple access schemes, becoming arguably the most popular scheme in use today. The reason for the growing popularity of CDMA is its promise to support more users than in TDMA and FDMA, as explained next.

In CDMA, each user is assigned a unique spreading sequence or code. While these codes may overlap in both frequency and time, they are carefully selected to be either orthogonal or pseudo-orthogonal (nearly orthogonal). When CDMA is applied with orthogonal codes, it supports up to K=N users, where N is the number of orthogonal codes. Orthogonal CDMA is limited by the available bandwidth and the desired bit rate. However, when CDMA is applied with pseudo-orthogonal codes, no theoretical limit exists on the number of users K that can be supported. Users can be added to the system until the amount of interference they create causes receivers to inaccurately detect the desired information.

Because of CDMA's promise to support increasing numbers of users, this research focuses on CDMA as the enabling technology for wireless exchange. But more than one type of CDMA technology exists. Two promising implementations of CDMA are direct-sequence CDMA (DS-CDMA) and multi-carrier CDMA (MC-CDMA).

Of these two forms of CDMA, DS-CDMA was the first to be introduced, and quickly moved from industry and academia to international standard committees. Second generation cellular included the DS-CDMA based IS-95 system among its standards. Recently, beginning mostly in 1998, standardization bodies began publicizing guidelines for third generation wireless systems: (1) the European Telecommunications Standards Institute (ETSI) agreed on the pure DS-CDMA-based standard known as WCDMA; (2) in Japan, the Radio Industry and Business (ARIB) also adopted WCDMA; and (3) a very similar DS-CDMA concept was approved by the North American T1 standardization bodies.

This widespread adaptation of DS-CDMA as a wireless standard has lead to an unprecedented worldwide investment into the DS-CDMA infrastructure. For this reason, we believe that if the concept of wireless exchange is to be successful in the wireless market, a DS-CDMA based multiple-access scheme, supporting wireless exchange, must be found. This serves as the topic of the proposed research.

2.5 Frequency Adaptable CDMA for Wireless Exchange

Idris Communications has developed a multicarrier-based signal processing technology, known as Carrier Interferometry (CI) [11][12][13], that is compatible with all multiple-access protocols. Idris has produced over 50 articles published in technical journals and peer-reviewed conference proceedings describing applications of CI to different multiple-access protocols, including Direct Sequence Spread Spectrum (DSSS), Direct Sequence Code Division Multiple Access (DS-CDMA), and Multicarrier Code Division Multiple Access (MC-CDMA).

We propose a multi-carrier waveform having selectable sub-carrier frequencies that can be used to generate DS-CDMA waveforms. The CI pulse waveform is a superposition of N orthogonal subcarriers, as shown in figure 1.

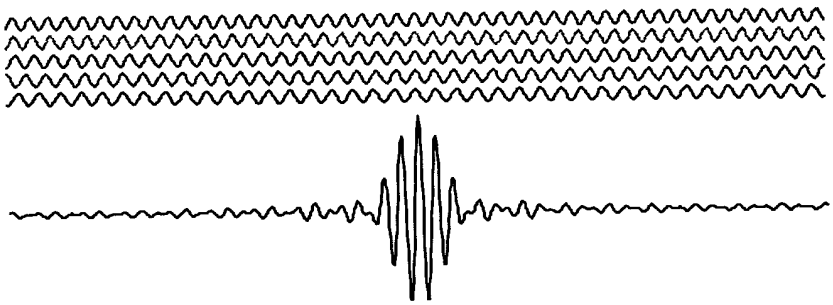

Figure 1

Individual sub-carrier frequencies can be selected or changed to avoid interference, deep fades, and spectrum allocations of other users (as shown in figure 2) without affecting the pulse shape.

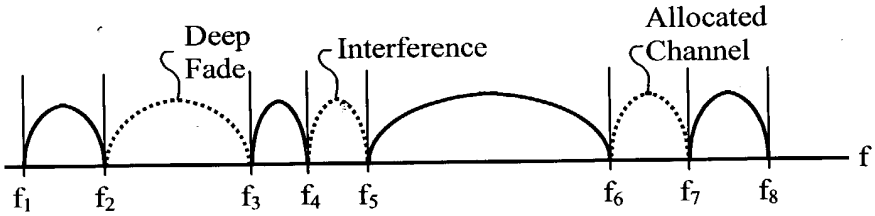

Figure 2

These pulses can be used to construct complex signal structures, such as the DS-CDMA signal shown in figure 3.

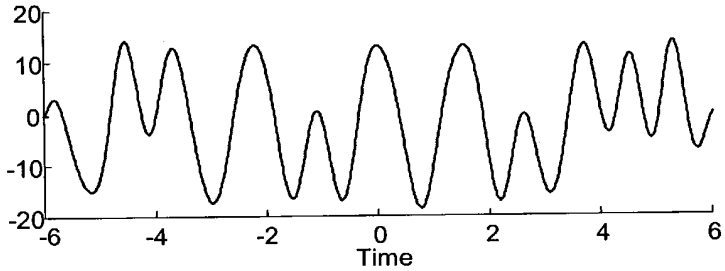

Figure 3

The received CI-based signals are decomposed into their original subcarriers. The subcarriers are then recombined to exploit frequency diversity and minimize MAI and inter-symbol interference. Simple sub-carrier sensing and scheduling can be used to ensure co-existence.

As a direct result of CI's superior interference mitigation, much higher throughput can be supported with high performance. For example, in DSSS, the CI waveform is used as a more efficient pulse shape that reduces effects of interference and signal loss in a multipath environment. Figure 4 shows the bit-error-rate (BER) performance of DSSS implemented with the CI waveform compared to conventional DSSS for a range of signal-to-noise (SNR) levels.

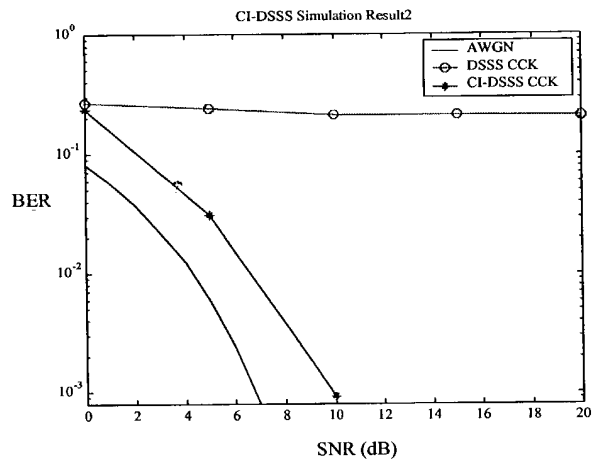

Figure 4

CI-based DSSS requires substantially less power (i.e., SNR) to achieve the same BER performance of conventional DSSS. Similarly, BER performance of CI-based DSSS is orders of magnitude better than conventional DSSS for given SNRs.

CI-based processing in the proposed wireless-exchange solution will substantially improve spectral efficiency and spectrum sharing by providing the following performance benefits:

1. Substantially reduced MAI,
2. Almost a complete elimination of ISI,
3. A common signal-processing platform for multiple access, and
4. Superior performance in multipath environments, which leads to lower transmission power requirements, increased throughput, increased range, and/or better signal quality.

The application of CI-based processing in wireless datalinks will significantly enhance the warfighter's ability to communicate and disseminate information in an environment with limited available frequency bandwidth.

3 PHASE I TECHNICAL OBJECTIVES

We seek a novel implementation of DS-CDMA that enables a more efficient wireless exchange, both in terms of numbers of users supported and performance of each user's channel. We contend that, as long as traditional Nyquist pulse shapes are employed in DS-CDMA, DS-CDMA will never be able to support a wireless exchange that benefits from both achievable performance and capacity gains. This is because these Nyquist chip shapes are not designed to enable DS-CDMA to operate over a non-contiguous band of frequencies. Thus, our research focuses on developing new DS-CDMA chip shapes that enable DS-CDMA to better exploit performance and capacity over non-contiguous bands.

In what follows, we present novel DS-CDMA chip shapes and demonstrate how they enable a much more efficient wireless exchange. The goals of the proposed research can be expressed as follows:

1. Design and develop a novel DS-CDMA chip shape consisting of distinct frequency components that allow the chip shape to be applied in a non-contiguous fashion over the

entire wireless-exchange spectrum

2. Ensure that the DS-CDMA system with the new chip shape supports a total number of users equal to (at least) $K = K_A + K_B$, where K_A and K_B refer to the number of users supported by network A and network B, respectively.
3. Ensure that the proposed chip shape allows the receiver to exploit all the diversity of the high-bandwidth channel found in a wireless exchange, while keeping MAI low.

These technical objectives will be achieved in the following work plan.

4 PHASE I WORK PLAN

Three key personnel will participate throughout the project. The Principle Investigator will contribute a total of four months and a Senior Engineer will contribute 1.5 months. Work will be managed by a Project Manager.

Work will proceed as listed next. Individual task assignments will also be given. Time assigned to each staff member is noted in hours. The staff member holding prime responsibility for the task is listed first. "PI" refers to the Principal Investigator, "SE" refers to the Senior Engineer, and "PM" refers to Project Manager. A graph representing the proposed work schedule (see Figure 12) follows.

4.1 Chip Shape Design

- PI1 = 70
- PI2 = 35
- PM= 15

In this research, we propose a DS-CDMA chip shape $p_{Tc}(t)$ is a linear combining of N orthogonal carriers, each a narrowband signal with bandwidth corresponding to the bandwidth of the transmitted information bits (i.e., bandwidth in the order of $1/T_s$). In the time domain, the chip shape is expressed as:

$$p_{Tc}(t) = \mathrm{Re}\{\sum_{j=0}^{N-1} A_j e^{j2\pi f_j t}\} \cdot p_{Ts}(t)$$

The information bit shape, $p_{Ts}(t)$, in its simplest form, refers to a rectangular waveform of height one that is non-zero over the duration of the incoming information bit. More generally, $p_{Ts}(t)$ is a pulse shape applied to the information bit (*not* the chip), and is a Nyquist pulse shape corresponding to either a raised cosine filter or a sinc function. This pulse shape has bandwidth in the order of $1/T_s$. The values $\{A_0, \ldots, A_{N-1}\}$ correspond to values (possibly complex) that are applied to each carrier of the chip shape. The frequencies $\{f_0, f_1, \ldots, f_{N-1}\}$ are required to be orthogonal over the information bit duration, i.e.,

$$\int_0^{Ts} \cos(2\pi f_j t + \varphi) \cdot \cos(2\pi f_k t + \theta) dt = 0, \;\; j \neq k$$

Some simple frequency selections that are orthogonal correspond to: (a) $f_i - f_{i-1} = \Delta f = 1/T_s$ or (b) frequencies that ensure that the signals sent over each carrier are non-overlapping.

The terms to be optimized correspond to the complex gains of each chip shape, $(A_j^0, \ldots, A_j^{N-1})$, $j=0,1,\ldots,N-1$. Through this optimization, possible sets of chip shapes will be determined that are made up of N carries and are orthogonal or pseudo-orthogonal to one another.

This use of a large number of carriers in information transmission is not new. For example, in OFDM [16][17], information is serial to parallel converted, and each parallel branch, containing

its own information bearing symbol, is sent on one orthogonal carrier. In this way, multipath effects are mitigated, and each carrier experiences only a flat fade. Additionally, in MC-CDMA [18][19][20], each user is assigned a code $x^i(t)$ that consists of N orthogonal carriers (as compared to N chips in DS-CDMA).
It is well known that the total number of orthogonal users DS-CDMA supports in network A's bandwidth corresponds to (total bandwidth)/(symbol rate) = $BW_A/(1/T_s)$. Similarly, the total number of orthogonal DS-CDMA users in network B's bandwidth corresponds to $BW_B/(1/Ts)$. Hence, in a wireless exchange, we want the system to support $K = (BW_A)/(1/T_s)+(BW_B)/(1/T_s)$ orthogonal users. Equivalently, we require that the system support K orthogonal *codes*.

The chip shapes are made up of *N* orthogonal frequency components, and each frequency component has a bandwidth corresponding to $(1/T_s)$. The total number of orthogonal frequency components corresponds to $N = (BW_A)/(1/T_s)+(BW_B)/(1/T_s) = K$. Since chip shapes consist of K orthogonal frequency components, it follows that K orthogonal chip shapes can be created. Thus, $K=K_A+K_B$ users can be supported.

In a multipath fading channel, the effect of the channel can be understood in both the time and the frequency domain. In the time domain, the effect of the fade is to create the arrival of multiple paths, as shown in Figure 5(a). In the time domain, the receiver benefits from the channel effects by separating the paths and then recombining them optimally.

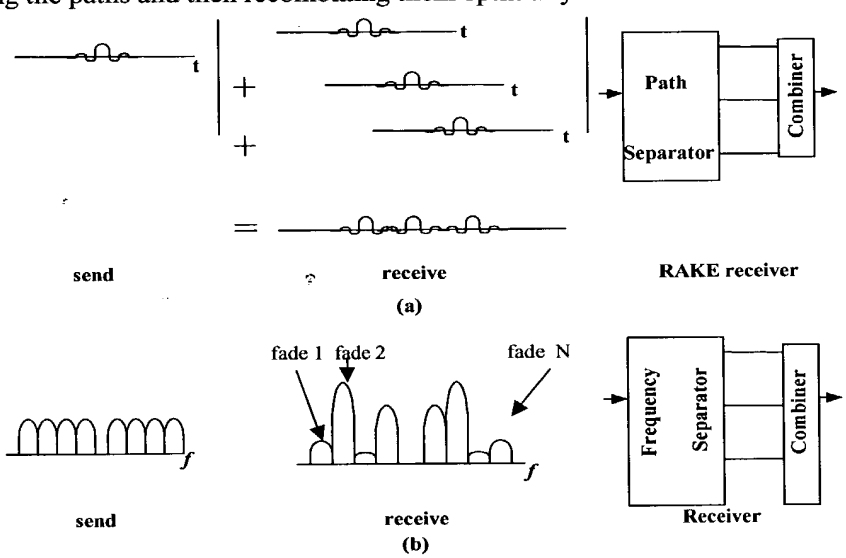

Figure 5. Multipath effects and receivers when processed in (a) time and (b) frequency

Different frequencies in the transmitted signal undergo different fades, as shown in Figure 5(b). In the frequency domain, the receiver can benefit from the full multipath effects by separating the transmitted signal into the different frequency components that experience different fades, and then recombining them to optimize performance.

Figure 6 illustrates a plot of MC-CDMA performance versus DS-CDMA performance. The main difference between the two systems is that in DS-CDMA, combining is performed across paths in the time domain as shown in Figure 5(a), whereas in MC-CDMA, combining is performed across frequencies as shown in Figure 5(b). It is evident that a system that performs combining across frequencies can support 32 users at a $P(E)=10^{-3}$, whereas a system that performs combining

across paths can support only 8 users at that same P(E) performance. The performance curves of Figure 6 are based on a 32-user system, an SNR of 18dB, and a multi-path channel with two resolvable multi-paths.

By building a DS-CDMA chip shape decomposable into its frequency components, we hope to significantly improve the performance of DS-CDMA systems. We anticipate achieving the same frequency-diversity performance benefits MC-CDMA has demonstrated (relative to traditional DS-CDMA) in Figure 6, since our frequency decomposable chip shapes demonstrate the same advantages.

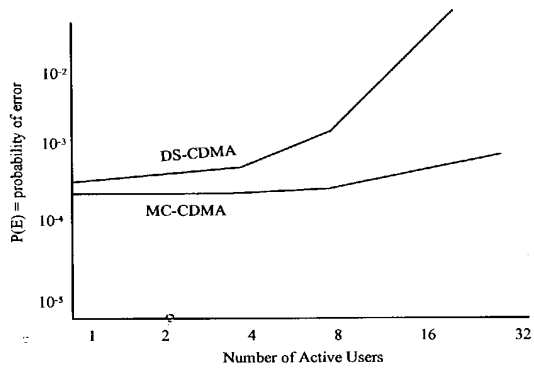

Figure 6. Representation of P(E) of DS-CDMA and MC-CDMA. Results are representative of those in [19].

4.2 DS-CDMA Design and Development

- PI1 = 80
- PI2 = 40
- PM = 15

In traditional DS-CDMA, the transmitted code for an ith user corresponds to:

$$x^i(t) = \sum_{n=0}^{N-1} (-1)^{c_n^i} p_{Tc}(t - nT_c)$$

Each chip $(-1)^{c_n^i}$ is shaped by the chip shape $p_{Tc}(t-nT_c)$, where chip shapes ensure that the time-shifted chips are orthogonal to one another, i.e.,

$$\int_0^{Ts} p_{Tc}(t - nT_c) p_{Tc}(t - mT_c) dt = 0, \ m \neq n$$

In this proposal, we will explore a more general form for the code design:

$$x^i(t) = \sum_{n=0}^{N-1} (-1)^{c_n^i} p_{Tc}^n(t)$$

In order to form a code, a total of N unique chip shapes are used. Each chip $(-1)^{c_n^i}$ is shaped by the unique chip shape $p^n{}_{Tc}(t)$. The nth chip shape is required to be orthogonal to the mth chip shape $p^m{}_{Tc}(t)$:

$$\int_0^{Ts} p_{Tc}^n(t) p_{Tc}^m(t) dt = 0, \ m \neq n$$

The DS-CDMA code for user *i* is:

$$x^i(t) = \sum_{n=0}^{N-1} (-1)^{c_n^i} p_{Tc}^n(t)$$

where

$$p_{Tc}^{n}(t) = \mathrm{Re}\{\sum_{j=0}^{N-1} A_j^n e^{j2\pi f_j t}\} \cdot p_{Ts}(t)$$

Thus, we can build codes $x^i(t)$ by using the multicarrier chip shapes and putting N of these chip shapes together to create each user's code. This introduces the following sub-tasks that will be performed in the work plan:

Design N chips shapes, $\{p^n_{Tc}(t),\ n=0,1,\ldots,N-1\}$ (which will be used by all users) where each chip shape has N degrees of freedom, $\{A^n_0,\ldots,A^n_{N-1}\}$ (corresponding to the complex gains of each of the N carriers it employs) subject to the orthogonality condition:

$$\int_0^{Ts} p_{Tc}^n(t) p_{Tc}^m(t) dt = 0,\ m \neq n$$

4.3 MC-CDMA Design and Development

- PI1 = 200
- PI2 = 100
- PM = 15

The design solution proposed by the researchers is based on an understanding of MC-CDMA [18][19][20]. Here, by analogy to MC-CDMA, each chip shape is selected according to:

$$p_{Tc}^{n}(t) = \mathrm{Re}\{\sum_{j=0}^{N-1} A_j^n e^{j2\pi f_j t}\} \cdot p_{Ts}(t)$$

where $A^n_j=(-1)^{b^i_n}$ and b^n_j is: (1) either 0 or 1 and (2) carefully selected in accordance with accepted MC-CDMA methods to ensure orthogonality among chip shapes.

Thus, we propose the following chip design: rather than select chip shapes which occupy a narrow interval of time T_c and are orthogonal to one another based on time delay nT_c, we instead select chip shapes that are made up of N distinct carrier components, occupy the entire time interval T_s, and are orthogonal to one another based on gains placed on the carriers.

4.4 Carrier Interferometry Design and Development

- PI1 = 100
- PI2 = 200
- PM = 15

In addition to investigating the MC-CDMA chip shape solution to the DS-CDMA chip design problem, the PI will also research various techniques based on ideas borrowed from carrier interferometry [21][22][23].

In carrier interferometry, N distinct carriers are combined in a manner creating a mainlobe followed by times of sidelobe activity. The researchers have determined that they can create an interferometry pattern in the time domain with the chip shape:

$$p_{Tc}(t) = \mathrm{Re}\{\sum_{j=0}^{N-1} A_j e^{j2\pi f_j t}\} \cdot p_{Ts}(t)$$

by simply allowing all the A_j values to correspond to 1, i.e., by creating the chip shape:

$$p_{Tc}(t) = \mathrm{Re}\{\sum_{j=0}^{N-1} e^{j2\pi f_j t}\} \cdot p_{Ts}(t)$$

Assuming that $f_j - f_{j-1} = \Delta f = 1/T_c$ for all j values, this chip shape $p_{Tc}(t)$ corresponds to the linear

combination of N distinct carriers while maintaining a more traditional shape in the time domain, such as a peak in time corresponding to the time at which the chip occurs.

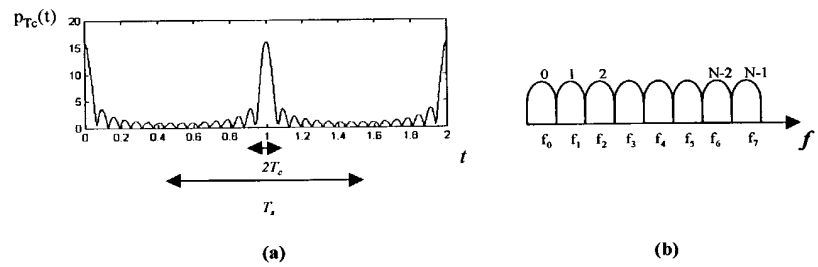

(a) (b)

Figure 7

Of even greater interest is the result that arises when considering the autocorrelation of the carrier interferometry chip shape. This autocorrelation satisfies:

$$R_{pTc(t)}(\tau) = \int_0^{Ts} p_{Tc}(t)p_{Tc}(t-\tau)dt = 0,\ \tau = T_c, 2T_c, \ldots, (N-1)T_c$$

This indicates that the chip shapes $p^0_{Tc}(t)=p_{Tc}(t)$, $p^1_{Tc}(t)=p_{Tc}(t-T_c), \ldots, p^{N-1}_{Tc}(t)=p(t-(N-1)T_c)$ satisfy the following criteria:

1. Frequency Make-up:
   a. Looking at Figure 7(b), it is apparent that all these chip shapes occupy N distinct frequency components.
   b. Mathematically, because a time shift in the time domain corresponds to a phase shift in the frequency domain, the chip shape $p^1_{Tc}(t)=p_{Tc}(t-T_c)$ corresponds to phase shifts of $A^1_j=e^{j(2\pi j \Delta f Tc)}$; and, more generally, the pulse shape $p^n_{Tc}(t)=p_{Tc}(t-nTc)$ corresponds to phase shifts of $A^n_j=e^{j(2\pi j \Delta f nTc)}$.
2. Orthogonality Condition:
   a. From the zeros of the autocorrelation function shown in equation, it is apparent that these time delayed chip shapes satisfy the orthogonality condition.

Hence, from points 1 and 2, the CI chip shape, and its time delayed (or, equivalently, phase delayed) replicas, also satisfy the chip shape design constraint. What is advantageous about this result is that, in accordance with Figure 7(a), it allows chip shapes to meet these criteria while maintaining a shape consistent with "traditional" chip shapes, where the bulk of the chip energy is sent in a short time.

The motivation for using this chip shape is its divisibility into orthogonal carrier components, allowing a DS-CDMA signal to be transmitted over non-contiguous frequency bands (as required in a wireless exchange) where (1) the DS-CDMA system supports a number of users equivalent to that supported if the bands were contiguous, and (2) the DS-CDMA system offers performance enhancements by achieving the full diversity benefits available over the entire bands (while keeping MAI low). This enables bandwidth-efficient exchanges, which underlie a practical future wireless exchange.

4.5 Design Flexible Bandwidth Exchange via CI Chip Shaping

- PI1 = 80
- PI2 = 40
- PM = 20

In the case where the proposed chip shaping is designed to best support bandwidth exchange among networks, it should be able to: (1) lend out as much bandwidth as possible to other networks in the case of an underused system; and (2) borrow as small amounts of bandwidth as needed when borrowing from other networks in the case of an oversubscribed system. We are already encouraged by certain special features available in CI chip shaping that make it particularly amenable to this task.

Minimum Bandwidth Usage for Maximal Lending: Consider a network whose wireless system can support 32 orthogonal carriers in its licensed bandwidth. In CI chip shaping, the number of carriers used to create a CI chip shape can be adjusted dynamically, all the while maintaining orthogonality among chip shapes. For example, if the system seeks to support four users and thereby requires only four chip shapes, only four carriers are required by the CI chip shaping. The remainder of the bandwidth (32 – 4 = 28 carriers) can be "borrowed" out. If the system later seeks to support eight users and thereby requires eight pulse shapes, only eight carriers need be used to support the creation of eight chip shapes. The remaining parts of the bandwidth (32 – 8 = 24 carriers) can be lent out to other systems.

Minimum Borrowing for Minimized Borrowing Cost With CI chip shaping, if a network needs to borrow bandwidth, narrow orthogonal carriers can be added one by one to the oversubscribed system until there are sufficient carriers to support number of users. Hence, if a system is only slightly oversubscribed, it can to borrow only one or two narrowband carriers from neighboring networks, thereby minimizing borrowing costs.

The system design task will conclude with a Phase I written report that summarizes the results of the research.

4.6 Research Schedule

The chart shown in the following table indicates the timetable for completion of the above tasks.

TASK	Jan	Feb	Mar	Apr	May	Jun
Chip Shape Design	√	√				
DS-CDMA Design		√	√			
MC-CDMA Design			√	√	√	
CI Design			√	√	√	
BW Exchange Design:					√	√

Figure 8

5 Related Work

Wireless networks are getting clogged in high-use areas like New York and Los Angeles. That congestion is being fueled by the ever-growing demand for wireless computer networks. Adding to the problem are the 126 million handheld computers and personal digital assistants expected to demand high data rate services by the year 2003. Compaq and Sun Microsystems top executives have already conceded that wireless devices will soon outpace computers when it comes to Net access. PC makers, such as Hewlett Packard and IBM and software giants, including Microsoft,

have embraced the wireless industry and are attempting to market their own wireless products [2][3][4].

It should come as no surprise, with such growing demand in both quantity and quality of service, that the pressure on Federal regulators is growing more intense every day, as industry demands more and more spectrum. But, in today's wireless world, there is little spectrum to go around.

In the early days of wireless communications, the FCC freely gave away bandwidth to companies providing services such as radio and TV. Today, however, with so many companies wanting to turn spectrum into small fortunes, the FCC has auctioned off a great deal of the wireless spectrum, receiving in return the generous sum of over $20 billion. Still, the demand for spectrum outpaces supply, and FCC chairman William Kennard has invited companies to come up with innovative ways to utilize the existing bandwidth [5].

Proposing one powerful solution to the wireless bandwidth problem, William Kennard recently suggested that wireless companies start trading bits and pieces of their unused wireless spectrum, so that these scarce pieces don't go to waste [1]. Such an idea, new to the world of wireless, is currently in the testing stages in the fiber-optic market where companies are already suggesting that a fiber-optic bandwidth exchange could handle $12 billion worth of orders (within a five year period). In a world where wireless spectrum is in short supply, a wireless exchange may be the only way to meet the rapidly growing consumer demands.

Various techniques are being implemented to enable spectrum sharing by different types of devices employing different transmission protocols and multiple-access schemes. For example, various attempts to achieve compatibility focus on Bluetooth and 802.11 WLAN networks that use the same frequency band. Proposed techniques include a combination of frequency scheduling, carrier sensing, and frequency hopping.

5.1 Bluetooth/WLAN Spectrum Sharing

Bluetooth uses a frequency hopping method to hop over 79 frequencies that are 1MHz wide. Each of these hops occupies a time slot that is a multiple of 625us duration. Packets can last 1,3 or 5 slots, but the hop frequency remains the same for each packet. The hopping sequences allow multiple Bluetooth piconets to co-exist simultaneously.

The 802.11b standard defines 11 possible channels that may be used. Channel hopping occurs at a rate 600 times slower than Bluetooth. Channel center frequencies have 5MHz separations from each other. Since 802.11b allows for signal bandwidth up to 16MHz, multiple co-located networks channels have to be adequately spaced from each other. The use of more than 5 co-located channels is not recommended.

When Bluetooth and WLAN devices hop to the same frequency, packets will be lost and throughput reduced. Several papers, such as [1-5], examine the mutual interference a Bluetooth and 802.11-enabled device have on each other. In cases where Bluetooth and 802.11 transceivers are positioned within a few meters of each other, throughput is significantly reduced. Bluetooth interferes more with 802.11, than the other way around due to Bluetooth's much faster hop rate. This is due to the fact that while an 802.11 device is transmitting on a particular frequency, a Bluetooth device might hop to this frequency several times before the 802.11 device hops to the next frequency. Although both technologies drop packets, 802.11's packets are larger; so more information has to be re-transmitted [4].

Various techniques have been proposed to enhance Bluetooth and WLAN co-existence by ensuring that co-located Bluetooth and 802.11 devices never use the same frequency at the same time. Section 5 of [1] gives a variety of different methods that can be used by both 802.11 and Bluetooth. For 802.11, it proposes using dynamic channel section to ensure a channel picked which will interfere as little as possible with Bluetooth piconets. A different method of ensuring a reduction of interference on 802.11 transmissions is to fragment 802.11 packets to ensure that any interference is minimized. However, this also reduces throughput by the increasing the overhead of packet headers. Other techniques involve power control to reduce the effects of interference [1],[6].

In Bluetooth, interference reduction is more difficult. TI [1] proposes 'Intelligent Frequency Hopping', a non-spec method of avoiding certain interfering frequencies. It is presumed this is the method TI and some other companies are currently announcing in their latest Bluetooth offerings [10]. However, a non-'Intelligent Frequency Hopping' master in a piconet would hop as normal, meaning any advantage an 'Intelligent Frequency Hopping'-enabled slave possessed would be negated. Finally, like 802.11, a transmit power control could be used to reduce interference in a congested band [1], [7].

Even more intensive interference mitigation is required when Bluetooth and 802.11 implementations are located on the same device, or even the same chipset. A simple signaling scheme with a coordination unit could be used by 802.11 and Bluetooth to reserve transmit and receive slots [1]. Although details are not announced, it is possible that a scheme like this may be what a number of companies are already using, such as the TrueRadio chip from Mobilian. Additionally a more complex method of adaptive reservation could be used to maximize throughput by resolving conflicting reservations. This would ensure that both devices avoid long traffic delays and account for differences in traffic processed by each device.

5.2 Current CI Projects

Idris Communications has developed a multicarrier-based signal processing technology, known as Carrier Interferometry (CI) [11][12][13], that is compatible with all multiple-access protocols. Idris has produced over 50 articles published in technical journals and peer-reviewed conference proceedings describing applications of CI to different multiple-access protocols, including Direct Sequence Spread Spectrum (DSSS), Orthogonal Frequency Division Multiplexing (OFDM), and Frequency Hopped Spread Spectrum (FHSS).

Idris first developed CI-based UWB as a solution to providing the performance of soliton transmissions in a wavelength division multiplexing protocol for optical fiber. The need for a "last mile" solution of getting data in high-speed optical networks to the end user provided the opportunity for Idris to extend its high-performance optical communications protocol to UWB radio communications.

While Idris performed work on an SBIR awarded by NASA Ames Research Center, it was discovered that CI provides performance improvements to all types of wireless communications and facilitates dynamic spectrum allocation. In particular, performance improvements to wireless LAN offered Idris a unique business opportunity, resulting in the spin-off of a new company, CIAN Systems, to commercialize CI technology for wireless LAN markets.

Idris is presently focused on the implementation of CI into Defense Department and emergency services systems to provide high-performance, robust wireless data and voice support in dirty, chaotic, ad-hoc mobile environments where security is important. Idris' sister company, CIAN, focuses on the implementation of cost effective CI solutions for commercial applications, such as

wireless LANs, to support high-speed connectivity for in-home, business, and mobile environments.

Some of the projects that Idris is currently working on include the following:

- Air Force Airborne Network Analysis
  - Demonstration Test
  - Technical Assessment
- Air Force Space BattleLabs
  - Phase I Satellite Demonstration
  - Potential Phase II Demonstration with Socomm.
- NASA Ames Research Center
  - Airport Communications Field Test
  - Airport Communications Transceiver Prototype Development

6 Relationship With Future Research and Research and Development

Idris Communication's final report will provide design specifications for CI-based radio communication systems. Idris anticipates Phase II work to include constructing and testing these components. This effort will also provide prototypes and demonstrations of a proposed commercial system that will aid consumer in-home network applications. Phase III development will involve seeking strategic equity partnerships with network-equipment manufacturers to combine our RF and baseband processing technologies with their network equipment. We will also seek venture capital to assist in the development of additional design resources and staffing.

7 Commercialization Strategy

Founded in 1999, Idris Communications, Inc. is a wireless communications company developing system semiconductor solutions for the multimedia connectivity industry. Leveraging its unique understanding of ultra-wideband and dynamic spectrum allocation, Idris's patented frequency-adaptive, ultra-wideband digital radio will allow multimedia-enabled devices, such as phones, set-top boxes, laptops, DVDs, video recorders and PDAs, to send and receive multiple streams of digital video, audio and data wirelessly, all at extremely low price points and power consumption levels—levels that cannot be reached by existing solutions. Idris will focus on customers in the OEM consumer electronic, OEM PC, PC-peripheral manufacturing, and wireless networking ODM/OEM spaces.

Today's digital video transmissions use MPEG-2 for encoding and require up to 12 Mbps to broadcast the video. In addition, higher rate encoding standards, such as HDTV and MPEG-2HD (High Definition), use higher rate transmissions in excess of 20 Mbps per video stream. Leading DVD companies have stated that they are moving to MPEG-2HD, underscoring the need for a wireless home technology that can deliver extremely high bandwidth for multiple channels of digital video transmission. According to the Consumer Electronics Association of America, DVD equipment sales for North America are forecasted to reach approximately 17 million units in 2003, representing a significant market opportunity for wireless connectivity solutions.

CI Ultra-wideband is a wireless technology that transmits an extremely low power signal over many non-contiguous bands of radio spectrum. Unlike conventional radio systems that operate within a relatively narrow bandwidth, i.e. Bluetooth, IEEE 802.11b, IEEE 802.11a, CI operates across a wide range of frequency spectrum by transmitting a series of very narrow and low power pulses composed of desired spectral components. The combination of adaptive spectrum, lower power, and frequency-domain processing means that ultra-wideband CI causes less interference than conventional UWB, and delivers wire-like performance in an indoor wireless environment. This makes CI-based ultra-wideband technology ideal for consumer electronics applications, such as camcorders, laptops, DVDs, digital cameras, etc.

Network design techniques developed by Idris, including more efficient multi-hop and peer-to-peer networks, will be utilized to design improved home networks. Existing wireless technologies (IEEE 802.11 a/b/g and Bluetooth) are unable to deliver upon the vision of the wirelessly connected home. There are many reasons for this. First, every wireless technology is fundamentally limited in terms of transmission range. Given the fact that every home is different in terms of physical size and layout, no single "cell" or "base station" is adequate for every home. As such, connecting devices within a single room (e.g., wireless personal area networks) and interconnecting them through a backbone of some fashion is a more amenable architecture for providing high bandwidth connectivity throughout the entire home. This backbone can be implemented as a distributed architecture known as "mesh".

Many of the needs described in this solicitation are similar needs faced by consumer markets. In particular, transceiver designs developed in the current proposal may be implemented in the home-network market. Consumer devices have the need to be simultaneously fast (to support multiple streams of digital video and/or audio), low power consuming (for embedding into battery-powered appliances) and low cost (for broad consumer adoption). Classic fixed-band solutions like IEEE 802.11a/b/g and Bluetooth require a fundamental compromise between these three parameters. As an example, to achieve an increase in data rate performance (to support multiple streams of digital video/audio), more signal processing is required (OFDM/11a/g as opposed to spread spectrum/Bluetooth for example). At the silicon level, this means a larger die, which translates into a higher cost and higher power consumption. The home multimedia distribution market is currently unserved due to the fact that no wireless technology meets the three basic needs of high data rate, low power, and low cost. Idris' and CIAN's products will be the first to offer this benefit and solution to the home networking market.

8 FACILITIES/EQUIPMENT

Idris' operates 5000 sq. ft. of office and lab space located in Superior, Colorado. This is headquarter for all research, engineering and administrative functions. The immediate facilities and their capabilities are described below.

Modeling and Simulation Network

Idris modeling and simulation capability consists of a network of multi-processor Sun workstations. These workstations run the latest modeling and simulation software from Mathworks including Matlab, Simulink and the Communication and DSP toolboxes that provide a wide variety of signal processing functionality through software libraries. In addition, Idris has developed a wide range of programs that can be used to simulate various communication protocols and systems using various channel models that simulate different environments.

Hardware Rapid Prototyping Lab

Idris maintains a dedicated work area for hardware prototyping, construction, and troubleshooting. This work area is equipped with FPGA development hardware and software for rapid prototyping of digital circuit designs. The design software consists of a PC and Unix based EDA design environment to write, compile, test, and convert programs to work on the latest FPGA chipsets. The re-configurable hardware platforms allow for easy integration with other systems and test equipment.

Test and Measurement Suite

To test communication signals and waveforms in real world environments, Idris owns a suite of equipment for signal generation and analysis. This equipment consists of the latest Agilent test and measurement hardware that can be modified and operated via PC-based software. The equipment can be configured to test a wide range of protocols and frequencies for validating and benchmarking performance.

To supplement is own research and development capabilities, Idris has relationships with CSU to have access to additional simulation and modeling resources located in their RAWCOM Laboratory. Also, Idris works with a number of Silicon Valley companies that provide additional hardware design capabilities that include ASIC design and test as well as analog capabilities such as RF circuit design and test.

9 CONSULTANTS

No consultants are presently foreseen for the Phase I program.

10 PRIOR, CURRENT, OR PENDING SUPPORT

Idris communications has been and is presently under contract with the Air Force to examine the deployment of CI in various environments.

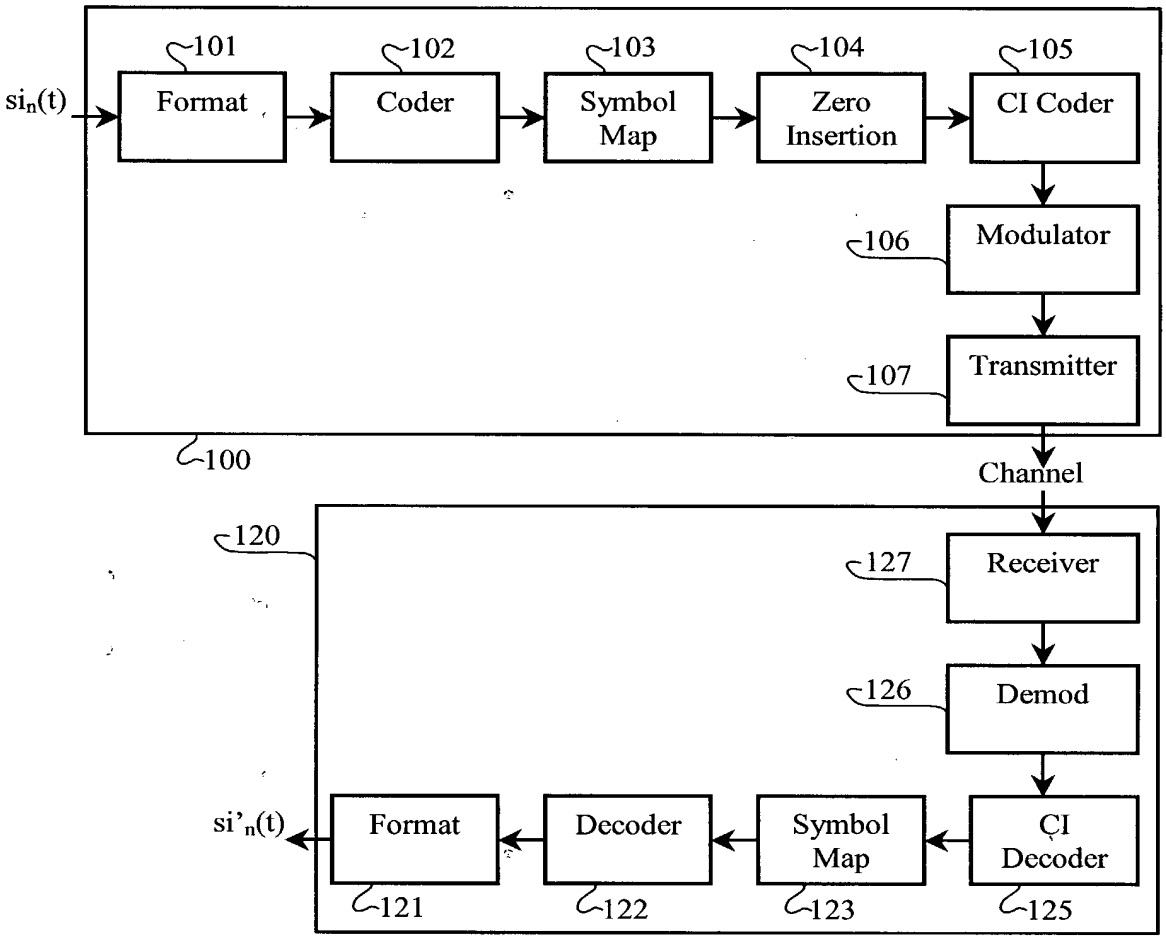
101
102
103
104
105
$si_n(t)$
Format
Coder
Symbol Map
Zero Insertion
CI Coder
106
Modulator
107
Transmitter
100
Channel
120
127
Receiver
126
Demod
$si'_n(t)$
Format
Decoder
Symbol Map
CI Decoder
121
122
123
125

FIG. 1

	s_0 ( )	s_1 ( ) 201	.....	0	.....	s_{N-1} ( )
$w_1 = \Sigma(\,)$:	$e^{i2\pi(0)(0)/(N-1)}$	$e^{i2\pi(1)(0)/(N-1)}$	.....	$e^{i2\pi(2)(0)/(N-1)}$	.....	$e^{i2\pi(N-1)(0)/(N-1)}$
$w_2 = \Sigma(\,)$:	$e^{i2\pi(0)(1)/(N-1)}$	$e^{i2\pi(1)(1)/(N-1)}$	.....	$e^{i2\pi(2)(1)/(N-1)}$	.....	$e^{i2\pi(N-1)(1)/(N-1)}$
$w_3 = \Sigma(\,)$:	$e^{i2\pi(0)(2)/(N-1)}$	$e^{i2\pi(1)(2)/(N-1)}$	.....	$e^{i2\pi(2)(2)/(N-1)}$	 203	$e^{i2\pi(N-1)(2)/(N-1)}$
⋮	⋮	⋮		⋮		⋮
$w_N = \Sigma(\,)$:	$e^{i2\pi(0)(N-1)/(N-1)}$	$e^{i2\pi(1)(N-1)/(N-1)}$	.....	$e^{i2\pi(2)(N-1)/(N-1)}$	.....	$e^{i2\pi(N-1)(N-1)/(N-1)}$

FIG. 2

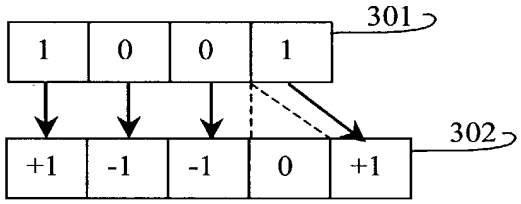

FIG. 3

6042670.103102

	s_0 ( )	s_1 ( ) 401	..... p_m	.....	s_{N-1} ( )
$w_1 = \Sigma(\,)$:	$e^{i2\pi(0)(0)/(N-1)}$	$e^{i2\pi(1)(0)/(N-1)}$	..... $e^{i2\pi(2)(0)/(N-1)}$	.....	$e^{i2\pi(N-1)(0)/(N-1)}$
$w_2 = \Sigma(\,)$:	$e^{i2\pi(0)(1)/(N-1)}$	$e^{i2\pi(1)(1)/(N-1)}$	..... $e^{i2\pi(2)(1)/(N-1)}$	.....	$e^{i2\pi(N-1)(1)/(N-1)}$
$w_3 = \Sigma(\,)$:	$e^{i2\pi(0)(2)/(N-1)}$	$e^{i2\pi(1)(2)/(N-1)}$	..... $e^{i2\pi(2)(2)/(N-1)}$	 403	$e^{i2\pi(N-1)(2)/(N-1)}$
⋮	⋮	⋮	⋮		⋮
$w_N = \Sigma(\,)$:	$e^{i2\pi(0)(N-1)/(N-1)}$	$e^{i2\pi(1)(N-1)/(N-1)}$	..... $e^{i2\pi(2)(N-1)/(N-1)}$	.....	$e^{i2\pi(N-1)(N-1)/(N-1)}$

FIG. 4

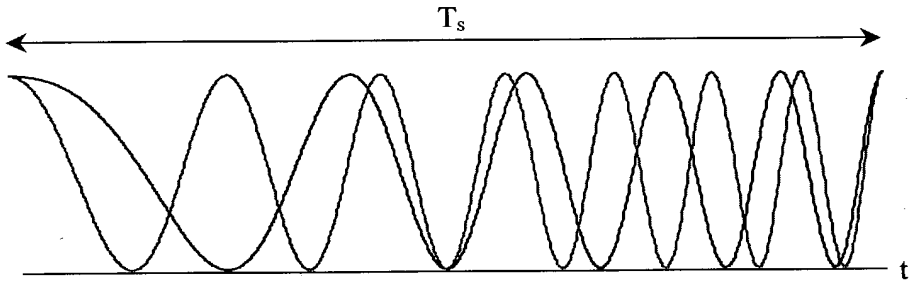

FIG. 5

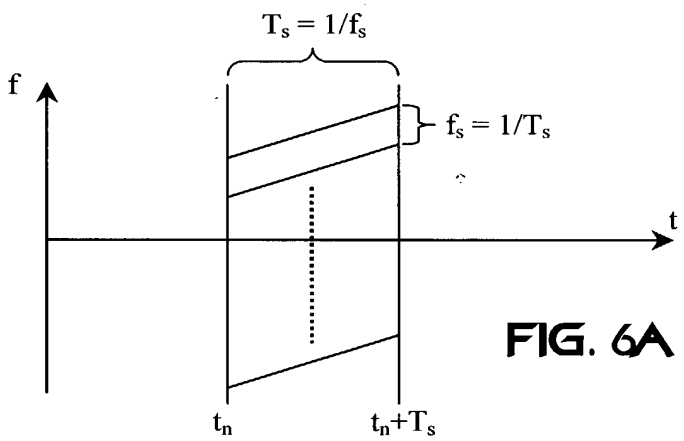

FIG. 6A

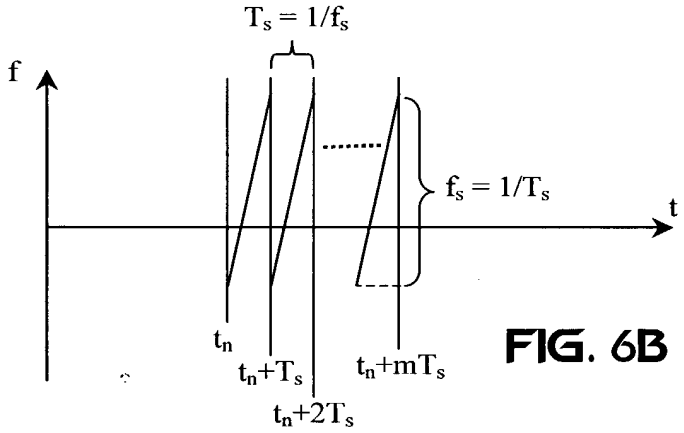

FIG. 6B

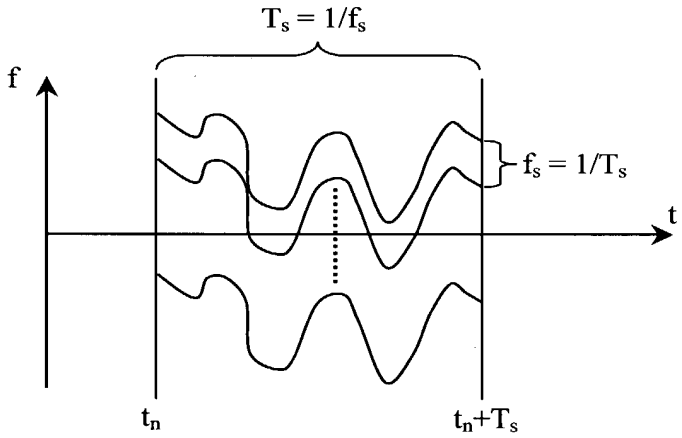

FIG. 6C

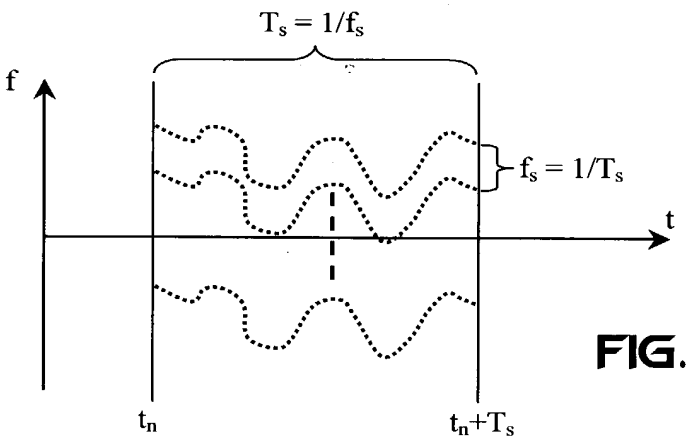

FIG. 6D

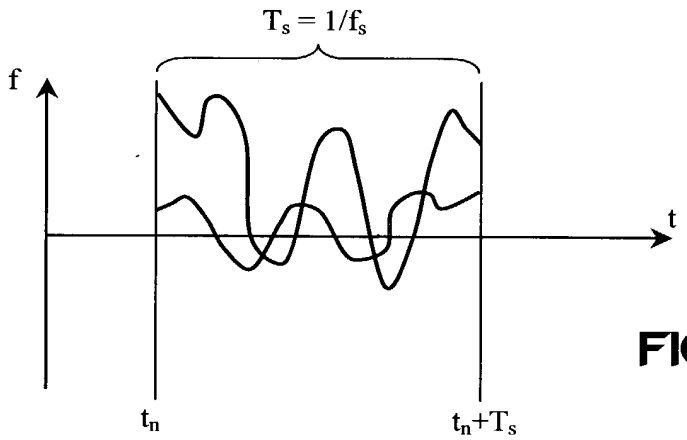

FIG. 6E

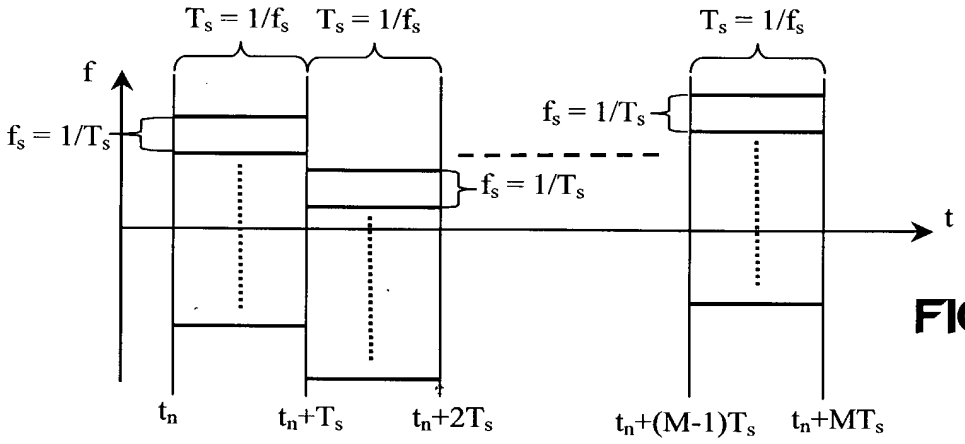

FIG. 6F

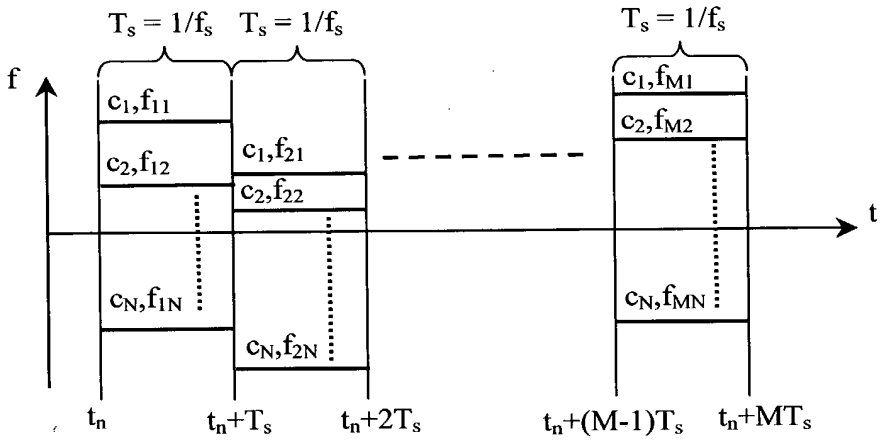
$T_s = 1/f_s$
$T_s = 1/f_s$
$T_s = 1/f_s$
f
t
c_1, f_{11}
c_2, f_{12}
c_N, f_{1N}
c_1, f_{21}
c_2, f_{22}
c_N, f_{2N}
c_1, f_{M1}
c_2, f_{M2}
c_N, f_{MN}
t_n
t_n+T_s
t_n+2T_s
$t_n+(M-1)T_s$
t_n+MT_s

FIG. 6G

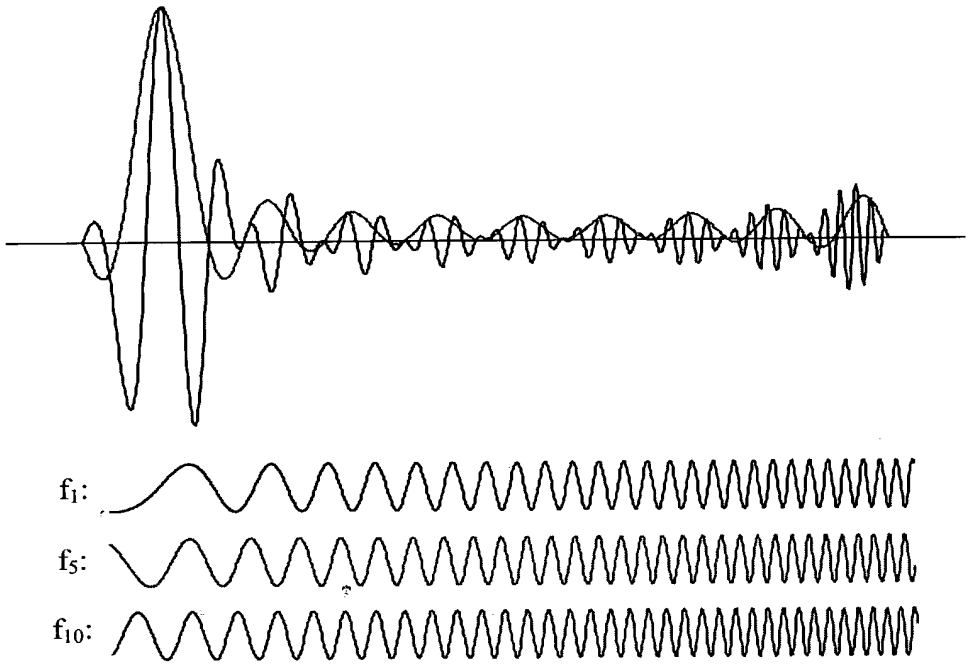
f_1:
f_5:
f_{10}:

FIG. 7A

60422670 .103102

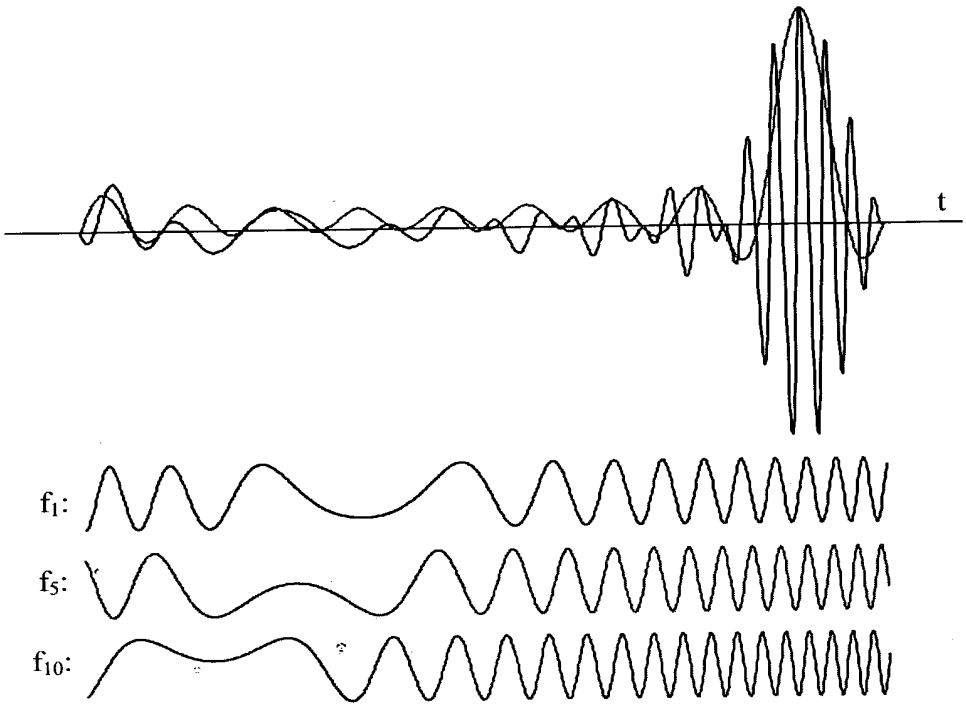

FIG. 7B

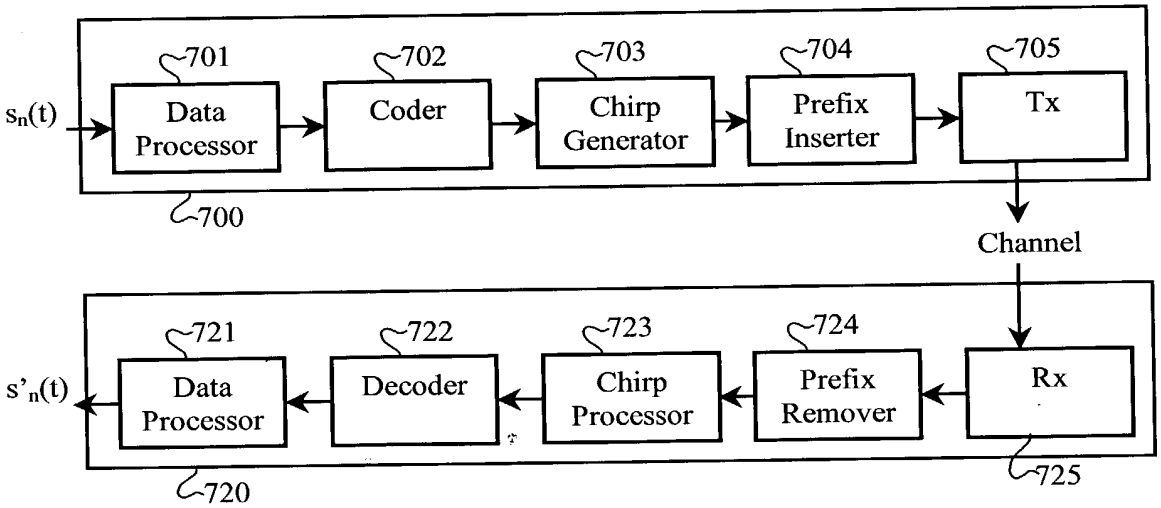

FIG. 7C

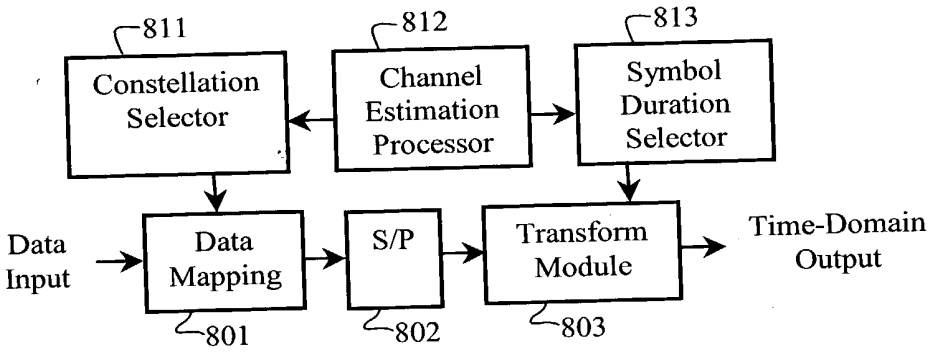
811
Constellation Selector
812
Channel Estimation Processor
813
Symbol Duration Selector
Data Input
Data Mapping
S/P
Transform Module
Time-Domain Output
801
802
803

FIG. 8A

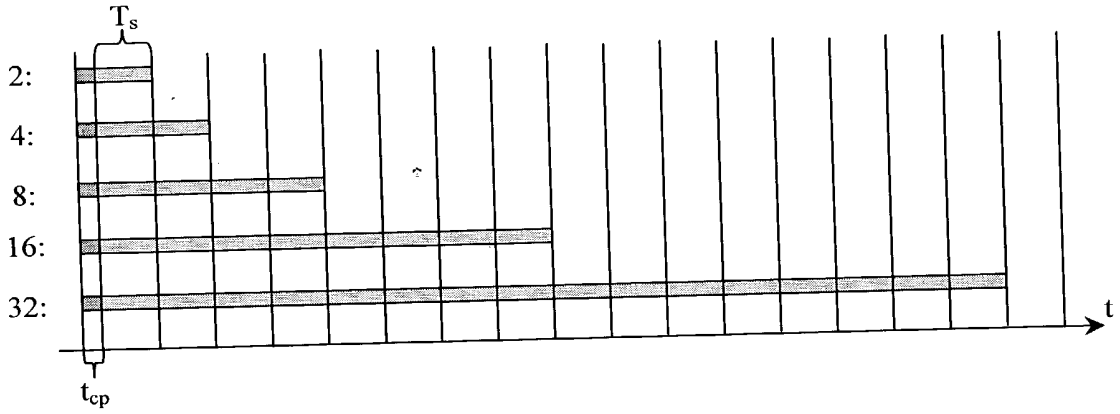
T_s
2:
4:
8:
16:
32:
t
t_{cp}

FIG. 8B

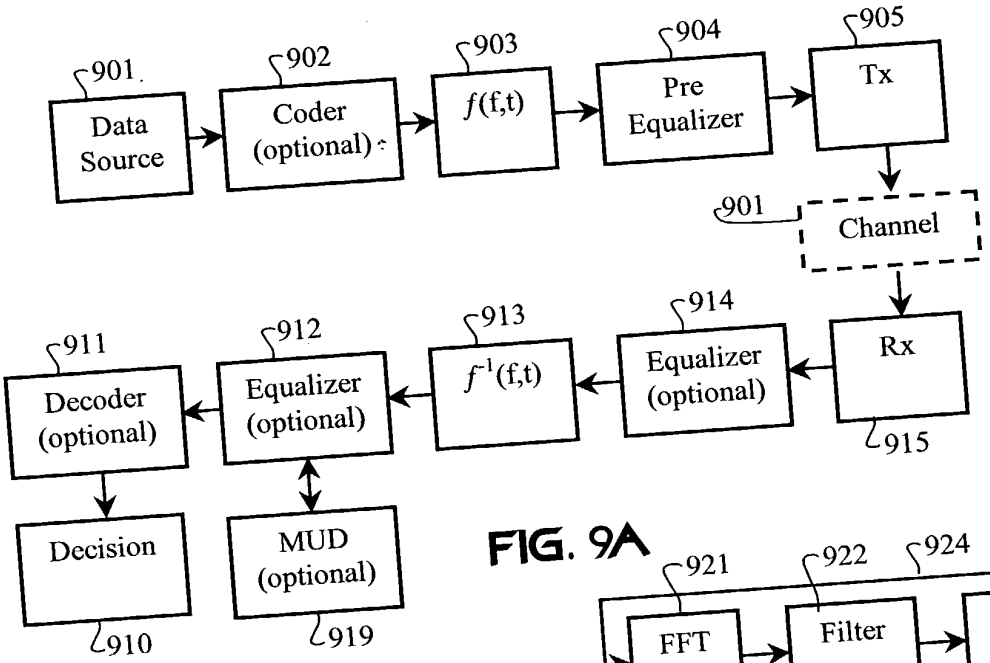

FIG. 9A

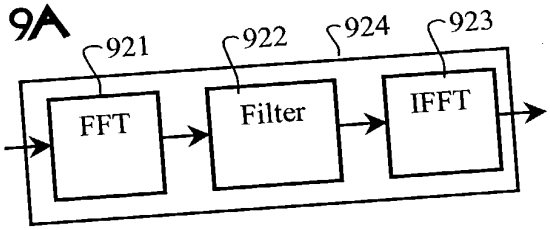

FIG. 9B

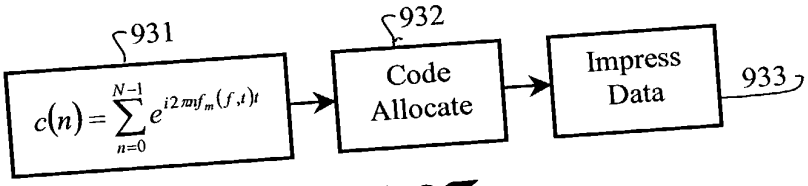

FIG. 9C

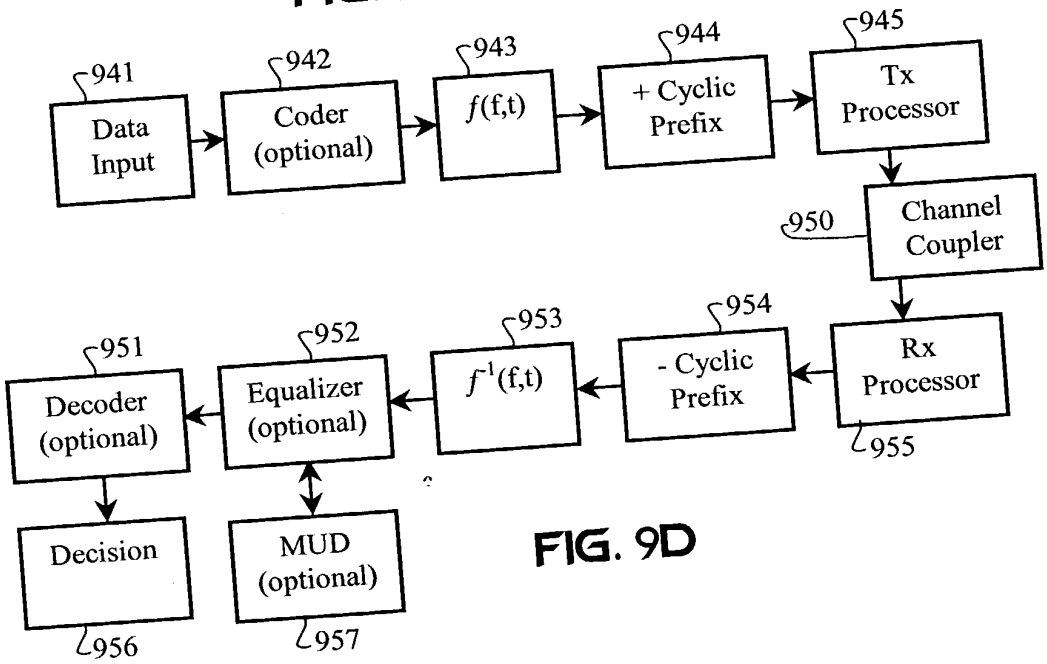

FIG. 9D

f_0:	1	2	3	4	1	2	3	4
f_1:	2	3	4	1	2	3	4	1
f_2:	3	4	1	2	3	4	1	2
f_3:	4	1	2	3	4	1	2	3
f_4:	1	2	3	4	1	2	3	4
f_5:	2	3	4	1	2	3	4	1
f_6:	3	4	1	2	3	4	1	2
f_7:	4	1	2	3	4	1	2	3
f_8:	1	2	3	4	1	2	3	4
f_9:	2	3	4	1	2	3	4	1
f_{10}:	3	4	1	2	3	4	1	2
f_{11}:	4	1	2	3	4	1	2	3

FIG. 10A

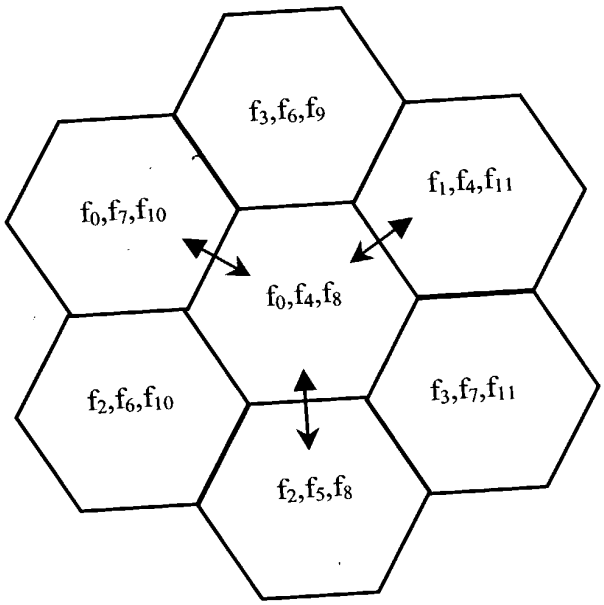

FIG. 10B

	$s_0(\,)$	$s_1(\,)$ 2201	.....	0	.....	$s_{k-1}(\,)$
$w_1 = \Sigma(\,)$:	$1 + e^{i2\pi(0)(0)/(N-1)}$	$e^{i2\pi(1)(0)/(N-1)}$	.....	$e^{i2\pi(2)(0)/(N-1)}$	.....	$e^{i2\pi(N-1)(0)/(N-1)}$
$w_2 = \Sigma(\,)$:	$e^{i2\pi(0)(1)/(N-1)}$	$1 + e^{i2\pi(1)(1)/(N-1)}$	.....	$e^{i2\pi(2)(1)/(N-1)}$	.....	$e^{i2\pi(N-1)(1)/(N-1)}$
$w_3 = \Sigma(\,)$:	$e^{i2\pi(0)(2)/(N-1)}$	$e^{i2\pi(1)(2)/(N-1)}$	.....	$e^{i2\pi(2)(2)/(N-1)}$	.....	$e^{i2\pi(N-1)(2)/(N-1)}$ 2203
⋮	⋮	⋮		⋮		⋮
$w_N = \Sigma(\,)$:	$e^{i2\pi(0)(N-1)/(N-1)}$	$e^{i2\pi(1)(N-1)/(N-1)}$	.....	$e^{i2\pi(2)(N-1)/(N-1)}$	.....	$1 + e^{i2\pi(N-1)(N-1)/(N-1)}$

FIG. 11

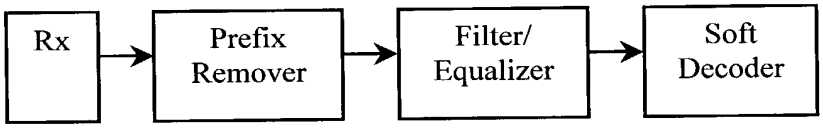

FIG. 12A

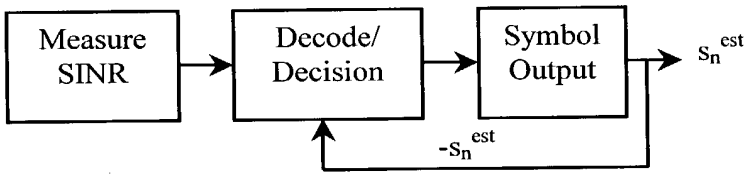

FIG. 12B