18351 U.S.PTO
080204

PTO/SB/16 (04-04)
Approved for use through 07/31/2006. OMB 0651-0032
U.S. Patent and Trademark Office; U.S. DEPARTMENT OF COMMERCE
Under the Paperwork Reduction Act of 1995, no persons are required to respond to a collection of information unless it displays a valid OMB control number.

22264 U.S.PTO
60/598187
080204

PROVISIONAL APPLICATION FOR PATENT COVER SHEET

This is a request for filing a PROVISIONAL APPLICATION FOR PATENT under 37 CFR 1.53(c).

Express Mail Label No. ER 901660619

INVENTOR(S)

Given Name (first and middle [if any])	Family Name or Surname	Residence (City and either State or Foreign Country)
Steve J	SHATTIL	Boulder, CO

Additional inventors are being named on the _____ *separately numbered sheets attached hereto*

TITLE OF THE INVENTION (500 characters max)

Cooperative Beam-Forming in Wireless Networks

Direct all correspondence to: **CORRESPONDENCE ADDRESS**

☐ Customer Number:

OR

☑ Firm or Individual Name	Steve Shattil				
Address	4980 Meredith Way #201				
Address					
City	Boulder	State	CO	Zip	80303
Country	US	Telephone	720 564-0691	Fax	

ENCLOSED APPLICATION PARTS *(check all that apply)*

☑ Specification *Number of Pages* 53

☑ Drawing(s) *Number of Sheets* 15

☐ Application Data Sheet. See 37 CFR 1.76

☐ CD(s), Number _____

☐ Other (specify) _____

METHOD OF PAYMENT OF FILING FEES FOR THIS PROVISIONAL APPLICATION FOR PATENT

☑ Applicant claims small entity status. See 37 CFR 1.27.

☑ A check or money order is enclosed to cover the filing fees.

☐ The Director is hereby authorized to charge filing fees or credit any overpayment to Deposit Account Number: _____

☐ Payment by credit card. Form PTO-2038 is attached.

Check # 2228

FILING FEE Amount ($): 80

The invention was made by an agency of the United States Government or under a contract with an agency of the United States Government.

☑ No.

☐ Yes, the name of the U.S. Government agency and the Government contract number are: _____

[Page 1 of 2]

Respectfully submitted,

SIGNATURE _____

TYPED or PRINTED NAME Steve J Shattil

TELEPHONE 720 564-0691

Date 08/02/2004

REGISTRATION NO. 40170
(if appropriate)
Docket Number: CBF01

USE ONLY FOR FILING A PROVISIONAL APPLICATION FOR PATENT

This collection of information is required by 37 CFR 1.51. The information is required to obtain or retain a benefit by the public which is to file (and by the USPTO to process) an application. Confidentiality is governed by 35 U.S.C. 122 and 37 CFR 1.14. This collection is estimated to take 8 hours to complete, including gathering, preparing, and submitting the completed application form to the USPTO. Time will vary depending upon the individual case. Any comments on the amount of time you require to complete this form and/or suggestions for reducing this burden, should be sent to the Chief Information Officer, U.S. Patent and Trademark Office, U.S. Department of Commerce, P.O. Box 1450, Alexandria, VA 22313-1450. DO NOT SEND FEES OR COMPLETED FORMS TO THIS ADDRESS. **SEND TO: Commissioner for Patents, P.O. Box 1450, Alexandria, VA 22313-1450.**

If you need assistance in completing the form, call 1-800-PTO-9199 and select option 2.

18351 U.S. PTO
080204

PTO/SB/17 (10-03)
Approved for use through 07/31/2006. OMB 0651-0032
U.S. Patent and Trademark Office; U.S. DEPARTMENT OF COMMERCE
Under the Paperwork Reduction Act of 1995, no persons are required to respond to a collection of information unless it displays a valid OMB control number.

FEE TRANSMITTAL for FY 2004

Effective 10/01/2003. Patent fees are subject to annual revision.

☑ Applicant claims small entity status. See 37 CFR 1.27

TOTAL AMOUNT OF PAYMENT ($) 80

Complete if Known	
Application Number	
Filing Date	08/02/2004
First Named Inventor	SHATTIL, Steve J
Examiner Name	
Art Unit	
Attorney Docket No.	CBF01

METHOD OF PAYMENT *(check all that apply)*

☑ Check ☐ Credit card ☐ Money Order ☐ Other ☐ None

☐ Deposit Account:

Deposit Account Number

Deposit Account Name

The Director is authorized to: *(check all that apply)*

☐ Charge fee(s) indicated below ☐ Credit any overpayments

☐ Charge any additional fee(s) or any underpayment of fee(s)

☐ Charge fee(s) indicated below, **except for the filing fee** to the above-identified deposit account.

FEE CALCULATION

1. BASIC FILING FEE

Large Entity Fee Code	Large Entity Fee ($)	Small Entity Fee Code	Small Entity Fee ($)	Fee Description	Fee Paid
1001	770	2001	385	Utility filing fee	
1002	340	2002	170	Design filing fee	
1003	530	2003	265	Plant filing fee	
1004	770	2004	385	Reissue filing fee	
1005	160	2005	80	Provisional filing fee	80

SUBTOTAL (1) ($) 80

2. EXTRA CLAIM FEES FOR UTILITY AND REISSUE

		Extra Claims		Fee from below		Fee Paid
Total Claims		-20** =		X		=
Independent Claims		- 3** =		X		=
Multiple Dependent						=

Large Entity Fee Code	Large Entity Fee ($)	Small Entity Fee Code	Small Entity Fee ($)	Fee Description
1202	18	2202	9	Claims in excess of 20
1201	86	2201	43	Independent claims in excess of 3
1203	290	2203	145	Multiple dependent claim, if not paid
1204	86	2204	43	** Reissue independent claims over original patent
1205	18	2205	9	** Reissue claims in excess of 20 and over original patent

SUBTOTAL (2) ($) 0

***or number previously paid, if greater; For Reissues, see above*

FEE CALCULATION (continued)

3. ADDITIONAL FEES

Large Entity Fee Code	Large Entity Fee ($)	Small Entity Fee Code	Small Entity Fee ($)	Fee Description	Fee Paid
1051	130	2051	65	Surcharge - late filing fee or oath	
1052	50	2052	25	Surcharge - late provisional filing fee or cover sheet	
1053	130	1053	130	Non-English specification	
1812	2,520	1812	2,520	For filing a request for *ex parte* reexamination	
1804	920*	1804	920*	Requesting publication of SIR prior to Examiner action	
1805	1,840*	1805	1,840*	Requesting publication of SIR after Examiner action	
1251	110	2251	55	Extension for reply within first month	
1252	420	2252	210	Extension for reply within second month	
1253	950	2253	475	Extension for reply within third month	
1254	1,480	2254	740	Extension for reply within fourth month	
1255	2,010	2255	1,005	Extension for reply within fifth month	
1401	330	2401	165	Notice of Appeal	
1402	330	2402	165	Filing a brief in support of an appeal	
1403	290	2403	145	Request for oral hearing	
1451	1,510	1451	1,510	Petition to institute a public use proceeding	
1452	110	2452	55	Petition to revive - unavoidable	
1453	1,330	2453	665	Petition to revive - unintentional	
1501	1,330	2501	665	Utility issue fee (or reissue)	
1502	480	2502	240	Design issue fee	
1503	640	2503	320	Plant issue fee	
1460	130	1460	130	Petitions to the Commissioner	
1807	50	1807	50	Processing fee under 37 CFR 1.17(q)	
1806	180	1806	180	Submission of Information Disclosure Stmt	
8021	40	8021	40	Recording each patent assignment per property (times number of properties)	
1809	770	2809	385	Filing a submission after final rejection (37 CFR 1.129(a))	
1810	770	2810	385	For each additional invention to be examined (37 CFR 1.129(b))	
1801	770	2801	385	Request for Continued Examination (RCE)	
1802	900	1802	900	Request for expedited examination of a design application	

Other fee (specify) _____

*Reduced by Basic Filing Fee Paid

SUBTOTAL (3) ($) 0

SUBMITTED BY				(Complete *(if applicable)*)	
Name (Print/Type)	Steve Shattil	*Registration No. (Attorney/Agent)*	40170	*Telephone*	720 564-0691
Signature				*Date*	08/02/2004

WARNING: Information on this form may become public. Credit card information should not be included on this form. Provide credit card information and authorization on PTO-2038.

This collection of information is required by 37 CFR 1.17 and 1.27. The information is required to obtain or retain a benefit by the public which is to file (and by the USPTO to process) an application. Confidentiality is governed by 35 U.S.C. 122 and 37 CFR 1.14. This collection is estimated to take 12 minutes to complete, including gathering, preparing, and submitting the completed application form to the USPTO. Time will vary depending upon the individual case. Any comments on the amount of time you require to complete this form and/or suggestions for reducing this burden, should be sent to the Chief Information Officer, U.S. Patent and Trademark Office, U.S. Department of Commerce, P.O. Box 1450, Alexandria, VA 22313-1450. DO NOT SEND FEES OR COMPLETED FORMS TO THIS ADDRESS. **SEND TO: Commissioner for Patents, P.O. Box 1450, Alexandria, VA 22313-1450.**

If you need assistance in completing the form, call 1-800-PTO-9199 and select option 2.

Patent Application

of

Steve Shattil

for

Cooperative Beam-Forming in Wireless Networks

RELATED APPLICATIONS

This application is a Continuation In Part of U.S. Pat. Appl. entitled "Carrier Interferometry Networks," which was filed on May 14, 2002.

BACKGROUND OF THE INVENTION

I. Field of the Invention

The present invention relates generally to antenna-array processing and ad-hoc networking, and particularly to providing cooperative signal processing between a plurality of wireless terminal devices, such as to improve network access.

II. Description of the Related Art

Wireless data service is an emerging market with high growth potential. However, market growth requires higher bandwidth and better coverage than cellular technologies can provide. Furthermore, state-of-the-art wireless network technologies are mainly focused on the server side, rather than using mobile wireless terminals to extend the network infrastructure.

A peer-to-peer mode of communication has distinct performance benefits over the conventional cellular model, including better spatial-reuse characteristics, lower energy

consumption, extended coverage areas, etc. The key advantage of the peer-to-peer network model is the increase in spatial reuse due to its short-range transmissions. Although peer-to-peer networking shows some promise, there are significant drawbacks that prevent conventional peer-to-peer networks from being a technically and commercially viable solution.

Recent analyses of multi-hop networks compared to cellular networks have indicated that the spatial reuse improvement in the peer-to-peer network model does not translate into greater throughput. Rather, the throughput is lower than that observed in the cellular network model. This observation is explained in three parts:

- *Multi-hop Routes:* Although the spatial reuse is increased, since a flow traverses multiple hops in the peer-to-peer network model, the end-to-end throughput of a flow, while directly proportional to the spatial reuse, is also inversely proportional to the hop-length. Moreover, since the expected hop-length in a dense network is of the order of $O(\sqrt{n})$, a tighter bound on the expected per-flow throughput is $O(1/\sqrt{n})$. While this bound is still higher than that of the dense cellular network model ($O(1/n)$), the following two reasons degrade the performance even more.
- *Base-Station Bottleneck:* The degree of spatial reuse and expected per-flow throughput of the peer-to-peer network model is valid for a network where all flows have destinations within the same cell. In this case, the base station is the destination for all flows (e.g., it is the destination of the wireless path). Thus, any increase in spatial reuse cannot be fully realized as the channel around the base-station becomes a bottleneck and has to be shared by all the flows in the network. Note that this is not an artifact of the single-channel model. As long as the resources around the base-station are to be shared by all the flows in the network (irrespective of the number of channels), the performance of the flows will be limited to that of the cellular network model.
- *Protocol Inefficiencies:* The protocols used in the cellular network model are both simple and centralized (with the base station performing most of the coordination) and operate over a single hop leading to very minimal performance degradation because of protocol inefficiencies. However, in the peer-to- peer network model, the protocols (such as IEEE 802.11 and DSR) are distributed, and they operate over

multiple hops. The multi-hop path results in more variation in latency, losses, and throughput for TCP. These inefficiencies (which arise because of the distributed operation of the medium access and routing layers) and the multi-hop operation at the transport layer translate into a further degraded performance.

Similarly, antenna-array processing has demonstrated impressive improvements in coverage and spatial reuse. Array-processing systems typically employ multiple antennas at base stations to focus transmitted and received radio energy and thereby improve signal quality. In cellular communications, improvements in signal quality lead to system-wide benefits with respect to coverage, service quality and, ultimately, the economics of cellular service. Furthermore, the implementation of antenna arrays at both ends of a communication link can greatly increase the capacity and performance benefits via Multiple Input Multiple Output (MIMO) processing. However, power, cost, and size constraints typically make the implementation of antenna arrays on mobile wireless terminals, such as handsets or PDAs, impractical.

In cooperative diversity, each wireless terminal is assigned an orthogonal signal space relative to the other terminals for transmission and/or reception. In particular, both multiplexing and multiple access in cooperative diversity are orthogonal. In antenna-array processing, either or both multiplexing and multiple access are non-orthogonal. Specifically, some form of interference cancellation is required to separate signals in an array-processing system because transmitted and/or received information occupies the same signal space.

Applications and embodiments of the present invention relate to ad-hoc networking and antenna-array processing. Embodiments of the invention may address general and/or specific needs that are not adequately serviced by the prior art, including (but not limited to) improving network access (e.g., enhancing range, coverage, throughput, connectivity, and/or reliability). Applications of certain embodiments of the invention may include tactical, emergency response, and consumer wireless communications. Due to the breadth and scope of the present invention, embodiments of the invention may be provided for achieving a large number of objectives and applications, which are too numerous to list herein. Therefore, only some of the objects

and advantages of specific embodiments of the present invention are discussed in the Summary and in the Preferred Embodiments.

SUMMARY OF THE INVENTION

Some of the exemplary embodiments of the present invention are summarized as follows.

1. A beam-forming system comprising:

   a plurality of wireless terminals coupled to at least one wireless wide area network (WWAN),

   at least one wireless local area network (WLAN) adapted to provide communication between the plurality of wireless terminals, and

   a cooperative beam-forming system employing the at least one WLAN for determining a plurality of beam-forming weights.

2. A beam-forming method comprising:

   providing for wireless connectivity between at least one group of wireless terminals and at least one WWAN,

   providing for WLAN connectivity between the at least one group of wireless terminals, and

   providing for cooperative beam-forming in the at least one group of wireless terminals.

3. A computer program embodied on a computer-readable medium for cooperative beam-forming comprising:

   a beam-forming weight calculation source code segment adapted to calculate at least one set of beam-forming weights for signaling between at least one group of wireless terminals and at least one WWAN, and

   a WLAN information-distribution source code segment adapted to distribute at least one of a set of signals between the at least one group of wireless terminals, the set of signals including a plurality of received WWAN signals, a plurality of WWAN transmission data, and the at least one set of beam-forming weights.

4. A computer program embodied on a computer-readable medium for cooperative beam-forming comprising:

a beam-forming weight source code segment adapted to calculate at least one set of beam-forming weights for signaling between at least one group of wireless terminals and at least one WWAN, and

a MIMO combining source code segment adapted to combine a plurality of weighted received WWAN signals, at least one of the beam-forming weight source code segment and the MIMO combining source code segment including WLAN information-distribution source code adapted to distribute at least one of a set of signals between the at least one group of wireless terminals, the set of signals including a plurality of received WWAN signals, a plurality of WWAN transmission data, at least one channel estimate, and the at least one set of beam-forming weights.

5. A cooperative beam-forming receiver comprising:

a plurality of WWAN interfaces wherein each WWAN interface is adapted to receive at least one transmitted WWAN signal,

a plurality of baseband processors wherein each baseband processor is coupled to at least one WWAN interface in the plurality of WWAN interfaces, the plurality of baseband processors adapted to generate a plurality of WWAN baseband signals,

at least one WLAN coupled to the plurality of baseband processors, and

at least one MIMO combiner adapted to receive at least one WWAN baseband signal from the WLAN, the at least one MIMO combiner adapted to perform MIMO combining of a plurality of WWAN baseband signals.

6. A cooperative beam-forming transmitter comprising:

a plurality of WWAN interfaces wherein each WWAN interface is adapted to transmit at least one WWAN signal,

at least one data source adapted to generate at least one data signal for transmission into at least one WWAN,

at least one WLAN adapted to couple the at least one data signal to the plurality of WWAN interfaces for generating a plurality of WWAN data signals, and

at least one MIMO processor adapted to generate a plurality of complex weights for weighting the plurality of WWAN data signals.

7. A wireless terminal comprising:

at least one WWAN interface,

at least one WLAN interface, and

at least one cooperative beam-forming system coupled between the WWAN interface and the WLAN interface and adapted to perform beamforming with information received from the WLAN interface.

Objects and advantages of various embodiments of the invention are described and inferred from the following detailed descriptions.

BRIEF DESCRIPTION OF THE DRAWINGS

FIG. 1A illustrates an application of various embodiments of the invention to a cellular network.

FIG. 1B illustrates an embodiment of the invention in which transmitted and/or received data between a WLAN group and a WWAN terminal occupies parallel, redundant channels c_n.

FIG. 1C illustrates an embodiment of the invention in which a WLAN group comprising a plurality of Wireless Terminals (WTs) is adapted to communicate with at least one WWAN node.

FIG. 1D illustrates an embodiment of the invention in which communications between a WWAN node and a plurality of WTs are characterized by different, yet complementary, code spaces c_1, c_2, and c_3.

FIG. 1E illustrates an embodiment of the invention in which a first WLAN group is adapted to communicate with a second WLAN group via at least one WWAN channel or network.

FIG. 1F shows an embodiment of the invention wherein a WLAN group includes a plurality of WWAN-active WTs and at least one WWAN-inactive WT.

FIG. 1G illustrates a cooperative beam-forming embodiment of the invention that functions in the presence of a desired WWAN terminal and a jamming source.

FIG. 1H illustrates a cooperative beam-forming embodiment of the invention that functions in the presence of a plurality of desired WWAN terminals.

FIG. 1I illustrates an embodiment of the invention adapted to provide a plurality of WTs in a WLAN group with access to a plurality of WWAN services.

FIG. 1J illustrates an embodiment of the invention in which a WLAN group includes at least one WWAN terminal.

FIG. 2A illustrates a functional receiver embodiment of the invention that may be realized in both method and apparatus embodiments.

FIG. 2B illustrates a functional receiver embodiment of the invention that may be realized in both method and apparatus embodiments.

FIG. 3A illustrates an embodiment of the invention in which a WLAN controller for a WLAN group allocates processing resources based on WWAN-link performance.

FIG. 3B illustrates an alternative embodiment of the invention in which a WLAN controller for a WLAN group allocates processing resources based on WWAN-link performance.

FIG. 4A illustrates a MIMO receiver embodiment of the invention.

FIG. 4B illustrates a functional embodiment of the invention in which MIMO processing operations are distributed over two or more WTs.

FIG. 4C illustrates a functional embodiment of the invention for transmission and reception of WWAN signals in a distributed network of WTs.

FIG. 4D illustrates a functional embodiment of the invention adapted to perform cooperative beamforming.

FIG. 5A illustrates a receiver embodiment of the invention that may be implemented by hardware and/or software.

FIG. 5B illustrates an alternative receiver embodiment of the invention.

FIG. 6A illustrates functional and apparatus embodiments of the present invention pertaining to one or more WTs coupled to at least one WWAN and at least one WLAN.

FIG. 6B illustrates a preferred embodiment of the invention that may be employed as either or both apparatus and functional embodiments of one or more WTs.

FIG. 7A illustrates a functional embodiment of the invention related to calculating MIMO weights in a cooperative-beamforming network.

FIG. 7B illustrates a functional embodiment of the invention adapted to calculate transmitted data symbols received by a cooperative-beamforming network.

FIG. 8A illustrates a preferred transmitter embodiment of the invention.

FIG. 8B illustrates a preferred receiver embodiment of the invention.

FIG. 8C illustrates an embodiment of the invention in which a plurality of WTs is adapted to perform time-domain processing.

FIG. 9A illustrates an optional transmission embodiment of the present invention.

FIG. 9B illustrates a functional flow chart that pertains to transmitter apparatus and method embodiments of the invention.

FIG. 10A illustrates software components of a transmission embodiment of the invention residing on a computer-readable memory.

FIG. 10B illustrates software components of a receiver embodiment of the invention residing on a computer-readable memory.

DESCRIPTION OF PREFERRED EMBODIMENTS

FIG. 1A illustrates how some embodiments of the invention may be employed in a cellular network. Each wireless terminal (WT) of a plurality of WTs 101-103 is in radio contact with at least one WWAN terminal (also referred to as a WWAN node), such as cellular base station 119. The cellular base station 119 may include one or more antennas (e.g., an antenna array). WWAN signals transmitted between the base station 119 and the WTs 101-103 propagate through a WWAN channel 99, which is typically characterized by AWGN, multipath effects, and sometimes includes external interference. The WTs 101-103 represent a WLAN group 110 if they are currently connected, or are capable of being connected, via a WLAN 109. Accordingly, the WTs are adapted to connect to at least one WWAN and to at least one WLAN. The WLAN group 110 may consist of two or more WTs in close enough proximity to each other to maintain WLAN communications. A given WWAN may include one or more WLAN groups, such as WLAN group 110.

In an exemplary embodiment of the present invention, the WTs 101-103 transmit data $d_t(n)$ to, and receive data $d_r(n)$ from, the base station 119 via the WWAN. The received data $d_r(n)$ is shared between the WTs 101-103 via the WLAN 109. Similarly, the transmitted data $d_t(n)$ may be distributed to the WTs 101-103 via the WLAN 109. The WLAN 109 comprises the wireless-communication resource between the WTs 101-103 and the associated physical-layer interface hardware. The WLAN 109 is differentiated from a WWAN by its relatively shorter range. For example, a Bluetooth or UWB system

functioning within an IEEE 802.11 network would be referred to as a WLAN, whereas the 802.11 network would be referred to as a WWAN. WLANs and WWANs, as defined herein, may employ any type of free-space transmissions, including, but not limited to, ultra-low frequency, RF, microwave, infrared, optical, and acoustic transmissions. WLANs and WWANs may employ any type of transmission modality, including, but not limited to, wideband, UWB, spread-spectrum, multi-band, narrowband, or dynamic-spectrum communications.

The WLAN 109 may also comprise the WLAN network-control functionality commonly associated with a WLAN, and the WWAN-access control functionality required to distribute necessary WWAN-access parameters (e.g., node addresses, multiple-access codes, channel assignments, etc.) between active WTs 101-103. The distribution of WWAN-access parameters between multiple WTs 101-103 enables each WT 101-103 to be responsive to transmissions intended for a particular WT and/or it enables a plurality of WTs 101-103 to function as a single WT when transmitting signals into the WWAN channel 99.

Particular embodiments of the invention provide for adapting either or both the transmitted data $d_t(n)$ and the received data $d_r(n)$ in order to perform beamforming. Specifically, the group of WTs 110 may be adapted to perform antenna-array processing by linking the individual WTs together via WLAN links 109 and employing appropriate antenna-array processing on the transmitted and/or the received data $d_t(n)$ and $d_r(n)$, respectively.

Ad-hoc wireless networks (e.g., multi-hop and peer-to-peer networks) may employ intermediate relay nodes to convey transmissions from a source to a destination. Relays reduce the transmission power requirements for sending information over a given distance. This indirectly increases the spatial-reuse factor, thus enhancing system-wide bandwidth efficiency. For this reason, ad-hoc wireless networking works particularly well with unlicensed spectrum, which is characterized by restrictive power limitations and high path loss compared to cellular bands. Similarly, for certain embodiments of the invention, it is preferable to employ high-loss (e.g., high-frequency) channels for the WLAN connections 109.

The capacity of wireless ad-hoc networks is constrained by interference caused by the neighboring nodes, such as shown in P. Gupta and P.R. Kumar, "The Capacity of Wireless Networks," IEEE Trans. Info. Theory, vol. IT-46, no. 2, Mar. 2000, pp. 388-404 and in A. Agarwal and P. R. Kumar, ``Improved capacity bounds for wireless networks." Wireless Communications and Mobile Computing, vol. 4, pp. 251-261, 2004, both of which are incorporated by reference herein. Using directional antennas (such as antenna arrays) reduces the interference area caused by each node, which increases the capacity of the network. However, the use of directional antennas and antenna arrays on the WTs 101-103 is often not feasible, especially when there are size constraints, power restrictions, cost constraints, and/or mobility needs. Thus, some embodiments of the present invention provide for enabling WTs to form groups that cooperate in network-access functions. This provides each member of a given WLAN group with greater network access, as well as other benefits.

Antenna-array processing is generally categorized as multiple-input, single-output (MISO), single-input, multiple-output (SIMO) or multiple input, multiple output (MIMO). Array processing typically employs beam forming in at least one predetermined signal space or signal sub-space. For example, phased-array processing involves coherent beam-forming of at least one transmitted signal frequency. Sub-space processing often employs some form of baseband interference cancellation or multi-user detection. Other variations of phased-array and sub-space processing also exist and may be implemented in embodiments of the present invention.

Sub-space processing is commonly employed via space-time processing (e.g., Rake receivers are employed in a frequency-selective channel) and/or space-frequency processing (e.g., frequency-domain processing is employed to provide for multiple flat-fading channels). Similarly, sub-space processing may employ other diversity parameters and combinations thereof, including (but not limited to) polarization processing and code-space processing.

MIMO systems have been shown to significantly increase the bandwidth efficiency while retaining the same transmit power budget and bit-error-rate (BER) performance relative to a single input, single output (SISO) system. Similarly, for a given throughput requirement, MIMO systems require less transmission power than SISO

systems. MIMO technology is useful for enabling exceptionally high bandwidth efficiency. However, many spatial-multiplexing techniques require rich scattering. Increased path loss and poor scattering are major problems for MIMO beyond 2.4GHz. For these reasons, lower (e.g., cellular) frequencies are often preferred for MIMO applications. However, some MIMO benefits can also be achieved at higher frequencies.

FIG. 1B illustrates an embodiment of the present invention in which transmitted and/or received data between the WLAN group 110 and the WWAN terminal 119 occupies parallel, redundant channels c_n. This approach is distinct from typical cooperative-diversity implementations in which WWAN data transmissions are conveyed over a plurality of orthogonal channels. Rather, each of the WTs 101-103 transmits and/or receives on a common channel c_n. This enables many well-known types of array processing to be performed.

The WLAN group 110 may function as either or both a transmitting array and a receiving array. The signal received at an antenna array is a noisy superposition of the n transmitted signals:

$$y(n) = \sqrt{\frac{E_s}{M_t}} Hs(n) + v(n)$$

where $\{s(n)\}_{n=0}^{N-1}$ is a sequence of transmitted vectors, E_s corresponds to the transmit energy assuming that $E_{sn}\|s_n\| = 1$ for $n = 1,\ldots,M_t$, $v(n)$ represents AWGN with zero mean and variance, and H is an M_r x M_t matrix channel (where M_r is the number of receiver elements and M_t is the number of transmitter elements), which is assumed constant over N symbol periods. The nominal rank of a rational matrix H is the order of the largest minor of H that is not identically zero, such as shown in T. Kailath, Linear Systems, Prentice-Hall, Inc., 1980, (especially Sec. 6.5), which is incorporated by reference.

Channel characterization involves finding a set of channel realizations (e.g., functions) that indicate channel quality with respect to some performance metric (e.g., error probability or asymptotic criteria). In the MIMO channel, several variables contribute to the channel quality (and thus, to the optimization of channel quality),

including the choice of space-time codes, receiver-terminal selection, and receiver algorithm(s) employed.

In one embodiment of the invention, a subset of WTs in a WLAN group may be selected such as to provide optimal WWAN transmission and/or reception within at least one predetermined constraint, such as an optimal or maximum number of active WWAN transceivers within the WLAN group. Such predetermined constraints are typically established to optimize some combination of WWAN link performance and resource use within the WLAN group. In one aspect of the invention, resource conservation may focus on WT battery power, MIMO processing complexity, and/or WLAN bandwidth.

Certain embodiments of the invention may distinguish between circuit power (e.g., power used to perform signal processing) versus transmission power. Other embodiments of the invention may provide consideration for the total battery power (e.g., processing power plus transmission power) budget, such as to provide power (e.g., battery usage) load balancing between WTs. Thus, embodiments of the invention may optimize a balance of signaling parameters, including (but not limited to) transmission power, channel-coding (and decoding) complexity, modulation, signal processing and the complexity associated with cooperative array processing parameters (e.g., number of active array elements, number of WTs employed to perform signal processing, number of WTs in a WLAN group, type of array-processing operations, etc.).

Any combination of various channel-characterization functions may be employed as a measure of link performance. Example functions including, but not limited to, the following may be employed. Possible functions include the average signal strength:

$$P(\mathrm{H}) = \frac{1}{N}\sum_{n=0}^{N-1}\left\|H^{(n)}\right\|_F^2$$

the average mutual information:

$$\bar{I}(\mathrm{H}) = \frac{1}{N}\sum_{n=0}^{N-1}\log\det\left(I_{M_r} + \frac{E_s}{N_o M_t}H^{(n)}H^{(n)\mathrm{H}}\right)$$

and the normalized average mutual information:

$$\bar{I}(\mathrm{H}) = \frac{1}{N}\sum_{n=0}^{N-1}\log\det\left(I_{M_r} + \frac{E_s}{N_o}\frac{1}{\alpha}H^{(n)}H^{(n)\mathrm{H}}\right)$$

where $\alpha = \frac{1}{NM_t M_r} \sum_{n=0}^{N-1} \left\| H^{(n)} \right\|_F^2$ is an estimate of the path loss.

Theoretical capacity in a MIMO channel is typically expressed as:

$$C = \log_d \det\left[I_{M_r} + \rho / M_t HH^* \right]$$

where ρ is the average SNR.

A preferred embodiment of the invention employs error-correcting codes to add structured redundancy to the information bits. This can be done to provide diversity, such as temporal diversity or frequency diversity. Embodiments of the invention may employ spreading codes, which are well known in the art. In addition to collaborative MIMO operations, the WTs may engage in collaborative decoding. In particular, a WLAN group may be provided with functionality that directs the WTs to coordinate information exchange and decoding via the WLAN.

In yet another embodiment of the invention, a WWAN terminal may be adapted to receive channel information (and/or even received data) from WTs, perform array-processing (e.g., MIMO) computations, and then upload the resulting array-processing weights to the WTs. The WTs simply apply the weights to their transmitted and/or received WWAN signals, and perform any other related operations, such as combining.

FIG. 1C illustrates a WLAN group 110 comprising a plurality of WTs 101-103 adapted to communicate with at least one WWAN node 119. A WWAN channel 99 expresses distortions, interference, and noise that affect WWAN transmissions between the WTs 101-103 and the WWAN node 119. Channel estimation characterizes propagation characteristics (e.g., multipath, shadowing, path loss, noise, and interference) in the WWAN channel.

In one embodiment of the invention, a given WWAN transmission is separated into spectral components (denoted by f_1, f_2, and f_3) by the WLAN group 110. For example, each of the WTs 101-103 may be adapted to receive predetermined spectral components f_1, f_2, and f_3 of a given transmission intended for a particular WT. Alternatively, each of the WTs 101-103 may be adapted to transmit one or more associated predetermined spectral component to the WWAN node 119.

The selection of spectral components f_1, f_2, and f_3 and their association with particular WTs 101-103 is typically performed to optimize WWAN system performance

relative to the current WWAN channel 99. For example, since the frequency-dependent fading profile in a scattering-rich environment tends to be unique for each WT 101-103 channel, the spectral components f_1, f_2, and f_3 are advantageously selected to minimize the effects of deep fades and/or interference. Spectral-component selection may be selected and/or adapted to optimize one or more WWAN link-performance metrics, including, but not limited to, SNR, BER, and throughput. Spectral-component selection may be performed to achieve other objectives, such as to distribute processing loads across the WLAN group 110.

The spectral components f_1, f_2, and f_3 may be characterized by overlapping or non-overlapping frequency bands. Spectral components f_1, f_2, and f_3 may each include continuous or discontinuous frequency-band components. Spectral components f_1, f_2, and f_3 may comprise similar or different bandwidths. Furthermore, the spectral components f_1, f_2, and f_3 may include gaps or notches, such as to notch out interference or deep fades. Accordingly, an aggregate signal derived from combining the spectral components f_1, f_2, and f_3 may include gaps or notches.

WWAN communication signals may include multicarrier (e.g., OFDM) or single-carrier signals. In the case of single-carrier signals, the WTs 101-103 can be adapted to perform frequency-domain synthesis and/or decomposition, such as described in published patent appl. nos. 20040086027 and 20030147655, which are hereby incorporated by reference in their entireties.

FIG. 1D illustrates a similar communication-system embodiment to that shown in FIG. 1C, except that the transmissions between the WWAN node 119 and the WTs 101-103 are characterized by different, yet complementary, code spaces c_1, c_2, and c_3. In this case, the term complementary means that the coded transmissions corresponding to the code spaces c_1, c_2, and c_3 can sum to produce at least one predetermined WWAN coded data sequence. This may be a weighted sum due to the given channel conditions. A predetermined WWAN coded data sequence employs a code that would ordinarily (in view of the prior art) be employed in whole. That is, it would not ordinarily be partitioned into sub-codes to be transmitted by different transmitters or received by different receivers.

In one embodiment of the invention, the code spaces c_1, c_2, and c_3 correspond to direct-sequence codes, such as used to provide for spreading and/or multiple access. A superposition of signals transmitted across the code spaces c_1, c_2, and c_3 provides at least one predetermined WWAN coded data sequence received by at least one WWAN node 119. Similarly, a superposition of signals received by the WTs 101-103 and mapped onto the code spaces c_1, c_2, and c_3 provides at least one predetermined WWAN coded data sequence that would ordinarily (in view of the prior art) be intended for a single WT. Preferred embodiments of the invention include channel correction (e.g., pre-distortion and/or receiver-side channel compensation) by either or both the WLAN group 110 and the WWAN node 119. Accordingly, the code spaces c_1, c_2, and c_3 may be adapted to account for channel conditions.

In another embodiment of the invention, the code spaces c_1, c_2, and c_3 correspond to direct-sequence codes having predetermined spectral characteristics. It is well known that different time-domain data sequences can be characterized by different spectral distributions. Accordingly, embodiments of the invention provide for selecting complementary codes c_1, c_2, and c_3 having predetermined spectral characteristics with respect to WWAN channel conditions affecting the links between the WTs 101-103 and the WWAN node 119. Thus, the codes c_1, c_2, and c_3 are selected according to the same criteria employed for selecting the spectral components f_1, f_2, and f_3.

FIG. 1E illustrates an embodiment of the invention in which a first WLAN group 110 (comprising WTs 101-103 connected via WLAN 109) is adapted to communicate with a second WLAN group 120 (comprising WTs 111-113 connected via WLAN 118) via WWAN channel 99. Applications of this embodiment may be directed toward peer-to-peer and multi-hop networks. Specifically, antenna-array processing (e.g., MIMO operations) may be performed by both WLAN groups 110 and 120. Each WLAN group (such as WLAN groups 110 and 120) may function as a single node in an ad-hoc network, a peer-to-peer network, or a multi-hop network. For example, any communication addressed to (or routed through) a particular node (such as one of the WTs 101-103) is advantageously processed by a plurality of WTs 101-103 in the WLAN group 110. In this case, each active WT 101-103 in the WLAN group 110 is responsive to

communications addressed to itself and to at least one other WT 101-103 in the WLAN group.

The WLAN 109 may be used to inform individual WTs 101-103 which node addresses (or multiple-access channel assignments) to be responsive to. Similarly, the WLAN 109 may convey information to WTs 101-103 in order to spoof node addresses and/or multiple-access information and otherwise help WTs 101-103 assume channelization information related to a particular WT identity prior to transmitting signals into the WWAN. Thus, the WLAN 109 can be used to assist in synchronizing WT interactions with the WWAN. The functionality of providing for sharing WWAN-access information between WTs 101-103 can be coordinated and controlled with respect to cooperative-array (e.g., MIMO) processing.

FIG. 1F shows an embodiment of the invention wherein a WLAN group 110 includes a plurality of WWAN-active WTs 101-103 and at least one WWAN-inactive WT, such as WTs 104-106. The WWAN-active WTs 101-103 are configured to directly transmit and/or receive WWAN communication signals 129. WWAN-inactive WTs 104-106 are defined as WLAN-connected terminals that do not directly communicate with the WWAN. Rather, the WWAN-inactive WTs 104-106 may be in a sleep or standby mode.

In a preferred embodiment of the invention, signals routed to and from a particular WT 101-103 are provided with beam-forming weights that allow for phased-array or sub-space processing. Calculation of the weights may be facilitated via distributed computing (e.g., as a load-balancing measure) across a plurality of the WTs (101-106). This allows the WLAN group 110 to scale the effective throughput of the WWAN link and coordinate system throughput with local area load balancing. In particular, the efficiency of the WWAN link is proportional to the smaller of the number of array elements at the WWAN terminal (not shown) and the number of WWAN-active transceiver antennas linked by the WLAN 109. When an equal number N of antennas is employed on both sides of the link, up to an N-fold increase in the link throughput is possible. Channel coding can be employed to exchange this increase for improved probability-of-error performance, increased range, and/or lower transmission power.

Although the capacity of a MIMO channel increases with the number of antennas employed at both ends of the link, the complexity of the transmission and reception

algorithms increases accordingly. For example, the sphere decoder has a typical complexity of $O(M_T^6)$, where M_T is the number of transmitting antennas, and V-Blast has a typical complexity of $O((M_R M_T)^3)$, where M_R and M_T are respectively the number of receiving and transmitting antennas. However, the computational power increases only linearly with respect to the number of WTs (assuming each WT has identical processing capability). Thus, the aggregate processing power of the WTs determines the maximum number of active antennas that a WLAN group 110 can support.

One solution to the disparity between required processing power and the number of WT processors in a given WLAN group 110 is to ensure that the total number of WTs exceeds the number of MIMO channels in the group 110. This approach enables at least two significant processing advantages:

1) The processing load is spread over a larger number of mobile-terminal processors, and
2) A form of antenna-switching diversity can be used to optimize performance and throughput in the MIMO channel.

Antenna switching is a well-known technique that switches between various antennas and selects ones having the best signal outputs. This can be done to reduce correlation between antennas, thereby improving MIMO performance. Antenna switching is described in G.J. Foschini, M.J. Gans, "On limits of wireless communication in a fading environment when using multiple antennas," *Wireless PersonalCommunications*, vol. 6, no. 3, pp. 311-335, March 1998, which is incorporated by reference. In some embodiments of the invention, WTs having the most favorable WWAN channel characteristics can be selected to improve MIMO processing without any increase in processing complexity.

In some embodiments of the invention, one or more WWAN-inactive WTs 104-106 may be employed for WLAN-based functions, such as (but not limited to) WLAN network control, distributed-computing applications, and WWAN-interface control. For example, WLAN network control may include any of the well-known network-control functions, such as terminal identification, authentication, error correction, routing, synchronization, multiple-access control, resource allocation, load balancing, power control, terminal-state management, hand-offs, etc.

The WLAN 109 may employ distributed computing across a plurality of the WTs. Distributed computing may be employed simply to achieve increased processing power. Alternatively, distributed computing may include other objectives, such as balancing computational processing loads or balancing power consumption across the WTs 101-106 in the WLAN group 110. Computational loads on the WLAN group can potentially include any WWAN-related computations, such as WWAN channel estimation, WWAN channel compensation, diversity combining, WWAN channel coding/decoding, and cooperative array processing (e.g., MIMO weight calculation, interference cancellation, multi-user detection, matrix operations, and other smart antenna array processing operations).

WWAN-interface control can include distributing WWAN data and control information between the WTs 101-106. In one exemplary embodiment of the invention, at least one of the WTs 101-106 acts as a data source and distributes its data to at least one other WT 101-106 for transmission into the WWAN. In a similar embodiment of the invention, received WWAN signals intended for a particular WT 101-106 are received by a plurality of WWAN-active WTs 101-103. The received WWAN signals may optionally be processed by one or more WTs 101-106 prior to being routed to the intended WT 101-106. Accordingly, WWAN channel-access information may be routed to a plurality of WWAN-active WTs 101-103 such that they function together as a single WT 101-106.

The determination of which WTs 101-106 are active is typically performed by decision processing within the WLAN group 110 that determines which WTs 101-106 exhibit the highest quality WWAN channel(s). The number of WWAN-active WTs (such as WTs 101-103) is determined by one or more factors, including WT channel quality, array-processing complexity, available computational resources within the WLAN group 110, load balancing, and information-bandwidth requirements. In an alternative embodiment of the invention, the WWAN assigns cooperative channel-access information to the WTs 101-103 and may optionally determine which WTs 101-106 are active.

Some embodiments of the invention take into consideration not only the MIMO complexity at the WTs, but also the added complexity associated with distributing the computational loads over WTs in a given WLAN group. Both MIMO and distributed

computing overheads can be characterized as a function of the number of WTs in a WLAN group. Furthermore, the information bandwidth of a given WLAN channel limits the rate of information exchange between WTs. Accordingly, local channel conditions within the WLAN may affect throughput and range and thus limit the number of WTs within the WLAN group. Either the WLAN capacity or the computational capability of each WT sets the practical limit on the number of WTs in a WLAN group and the overall frequency-reuse factor. Another important factor that can impact the WLAN group size is the channel rate-of-change, which is due to motion of the WTs. In particular, rapidly changing channel conditions necessitate frequent updates to the MIMO computations, thus increasing the computational load on WLAN group and potentially increasing the required data transfer across the WLAN. Similarly, local channel conditions should dictate the flow of data if distributed computing is employed.

MIMO systems experience substantial degradation in data transfer rates in mobile channels. Time-varying multipath-fading profiles commonly experienced in a mobile wireless network exhibit deep fades that often exceed 30dB. Commercial viability of some embodiments of the present invention requires the ability to tolerate a rapidly changing channel. A promising approach to this problem is to employ diversity to reduce the channel rate-of-change. In a wideband system, or equivalently, in a system comprised of a number of narrowband subcarriers distributed over a wide frequency band, deep fades affect only a portion of the total channel bandwidth. Therefore, frequency and/or spatial diversity can be employed to reduce the likelihood of deep fades in a multipath environment. In a mobile environment, this translates into lowering the channel rate-of-change.

FIG. 1G illustrates a cooperative beam-forming embodiment of the invention that functions in the presence of a desired WWAN terminal 119 and an external interference source (or jammer) 118. WTs 101-103 in a WLAN group 110 coordinate their received aggregate beam pattern(s) to null out jamming signal 115. Array-processing operations performed on signals received from the WTs 101-103 may take the form of phased-array processing, which minimizes the array's sensitivity to signals arriving from one or more angles. Alternatively, array processing may employ baseband (or intermediate-frequency)

interference cancellation. Similarly, beam-forming operations may be employed to cancel emissions transmitted toward one or more terminals (such as jammer 118).

FIG. 1H illustrates a cooperative beam-forming embodiment of the invention that functions in the presence of a plurality of desired WWAN terminals 119 and 127. In one embodiment of the invention, the WWAN terminals 119 and 127 are common to a particular WWAN, and the configuration illustrated in FIG. 1H represents a soft hand-off in which redundant transmissions are transmitted between the WLAN group 110 and the WWAN terminals 119 and 127. In this case, the WLAN group is geographically distributed over a plurality of WWAN sectors or cells. In one aspect of the invention, the WLAN group 110 may adapt its connectivity with the WWAN to transition to the cell or sector offering the optimal aggregate WWAN channel quality. Accordingly, the WLAN group may adapt its selection of WWAN-active WTs in response to a hand off.

In another embodiment of the invention, the WLAN group 110 may employ a first WWAN connection (illustrated by a connection between WTs 101 and 102, and WWAN terminal 119) and a second WWAN connection (illustrated by a connection between WT 103 and WWAN terminal 127) to transmit and/or receive one or more data streams. The WLAN group 110 may employ a plurality of WWAN user channels in a given WWAN. Similarly, the WLAN group 110 may employ connections to a plurality of different WWANs.

FIG. 1I illustrates an embodiment of the invention that provides a plurality of WTs 101-106 in a WLAN group 110 with access to a plurality of WWAN services. For example, WT 101 is provided with a communication link with an IEEE 802.16 access-point terminal 116 in an IEEE 802.16 network, WT 102 maintains access capabilities to a 3G-cellular terminal 119, and WT 103 has connectivity to an IEEE 802.11 access point 117. WLAN connectivity 109 is adapted to enable any of the WTs 101-106 in the WLAN group 110 to access any of the plurality of WWAN services.

The WLAN 109 may include a WWAN-access controller (not shown), which may take the form of WLAN-control software residing on a physical device, such as one or more WTs 101-106. Connectivity of the WTs 101-106 to the available WWAN services may be performed with respect to a combination of technical rules and business rules. For example, WWAN access is typically managed using technical rules, such as network load

balancing, power conservation, and minimizing computational processing loads. However, WWAN access can also be influenced by business rules, such as enabling a predetermined cost/service ratio for individual WTs 101-106. For example, the WWAN-access controller (not shown) can anticipate the economic cost of particular WWAN services to the user, as well as user communication needs, when assigning WWAN access to individual WTs 101-106. Each WT 101-106 provides the WWAN-access controller (not shown) with a cost tolerance, which can be updated relative to the type of communication link desired. For example, high-priority communication needs (such as particular voice communications or bidding on an online auction) may include permissions to access more expensive WWAN connections in order to ensure more reliability.

The overall goal of WWAN access is to achieve optimal connectivity with minimum cost. Accordingly, WWAN-access algorithms may include optimization techniques, including stochastic search algorithms (like multi-objective genetic algorithms). Multi-objective optimization are well known in the art, such as described in E.Zitzler and L.Thiele," Multiobjective evolutionary algorithms: A comparative case study and the strength pareto approach," *IEEE Tran. on Evol. Comput.*, vol. 3, no. 4, Nov 1999, pp. 257-271 and J.D. Schaffer, "Multiple objective optimization with vector evaluated genetic algorithms," *Proceedings of 1st International Conference on Genetic Algorithms*, 1991, pp. 93-100, both of which are incorporated by reference.

A WWAN-access controller (not shown) preferably ensures an uninterrupted session when transitioning from one WWAN to another. In particular, the transition between different WWANs should be invisible to the user. This requires that the WWAN-access controller (not shown) be adapted to store user state information (e.g., save browser pages or buffer multimedia data streams). Furthermore, back-end systems are preferably employed to manage cooperative WWAN access in order to consolidate different WWAN-access charges into a single bill for the user.

In FIG. 1J, a plurality of WTs 101-106 in a WLAN group 110 includes at least one WWAN terminal 106. The WTs 101-105 contribute beam-forming capabilities to the WWAN terminal 106, such as to increase range, increase spatial reuse, reduce transmission power, and/or achieve any of other various beamforming objectives.

In one embodiment of the invention the WTs 101-105 function as lens for WWAN signals transmitted and received by the WWAN terminal 106. For example, the WTs 101-106 may collect received WWAN signals and then focus retransmitted WWAN signals at the WWAN terminal 106. Similarly, the WTs 101-105 may assist in the transmission of WWAN signals from the WWAN terminal 106 to one or more remote sources. In essence, the WTs 101-105 function like a radio relay, but with directionality and focusing capabilities. In this embodiment, the WLAN connectivity of WTs 101-105 with the WWAN terminal 106 is not necessary.

In another embodiment of the invention, one or more of the WTs 101-106, such as WWAN terminal 106, may be adapted to process the majority (or entirety) of necessary beam-forming computations. In this case, WT 106 is designated as a computer-processing terminal. The computer-processing terminal 106 is adapted to include specific computational resources for processing WWAN signals received by other WTs (such as WTs 101-103), which are then relayed via the WLAN 109 to the computer-processing terminal 106. Similarly, the computer-processing terminal 106 may be adapted to perform signal-processing operations associated with WWAN transmission. Computational operations associated with other WWAN signal-processing operations (e.g., coding, decoding, channel estimation, network-access control, etc.) may be provided by the computer-processing terminal 106.

FIG. 2A illustrates a functional embodiment of the invention that may be realized in both method and apparatus embodiments. A plurality M of WWAN Interfaces 1101.1-1101.M is provided for coupling WWAN signals to and/or from at least one WWAN. In one functional embodiment, WWAN Interfaces 1101.1-1101.M are WWAN transceivers that are adapted to convert received WWAN signals into received baseband signals. A plurality of WWAN baseband processors 1102.1-1102.M are optionally provided for performing baseband processing (such as, but not limited to, channel compensation, A/D conversion, frequency conversion, filtering, and demultiplexing) on the received baseband signals. Alternatively, the function of the WWAN baseband processors 1102.1-1102.M may be performed by the WWAN Interfaces 1101.1-1101.M.

Baseband outputs from the WWAN baseband processors 1102.1-1102.M are coupled into a plurality of array processors, such as MIMO combiners 1103.1-1103.M. In

a MIMO channel, the received WWAN signals (and thus, the baseband outputs) are characterized by a plurality of overlapping (i.e., interfering) signals. Although MIMO combiners 1103.1-1103.M are shown, any types of array processors may be employed. The number of array processors may be less than, equal to, or greater than the number M of WWAN Interfaces 1101.1-1101.M. Baseband outputs may also be coupled into a WLAN 1105, which is coupled to the plurality of MIMO combiners 1103.1-1103.M. Each MIMO combiner 1103.1-1103.M is adapted to receive baseband outputs from two or more baseband processors 1102.1-1102.M wherein at least one of those baseband outputs is coupled to the MIMO combiner 1103.1-1103.M via the WLAN 1105.

A particular m^{th} MIMO combiner 1103.m need not process data from a corresponding (m^{th}) WWAN Interface 1101.m. Rather, the mth MIMO combiner 1103.m may process baseband signal outputs from a plurality of WWAN Interfaces 1101.p $\{p = 1,...,M$, where $p \neq m\}$.

The WLAN 1105 comprises at least one WLAN channel between at least one baseband output (e.g., baseband processor 1102.1-1102.M outputs) and at least one array processor, such as the MIMO combiners 1103.1-1103.M. The WLAN 1105 may include WLAN interfaces (not shown) and associated WLAN-control hardware and/or software (not shown).

The MIMO combiners 1103.1-1103.M are adapted to separate the overlapping signals and output at least one desired transmission therefrom. Outputs of the MIMO combiners 1103.1-1103.M are optionally processed by secondary data processors 1104.1-1104.M, which may include coupling into the WLAN 1105. The secondary data processors 1104.1-1104.M may be adapted to perform demodulation, error-correction decoding, data formatting, and/or other related baseband-processing functions.

In some embodiments of the invention, MIMO combiner 1103.1-1103.M outputs may be coupled via the WLAN 1105 to other MIMO combiners 1103.1-1103.M and/or secondary data processors 1104.1-1104.M. For example, embodiments of the invention may employ an iterative cancellation process, such as successive interference cancellation (which is well-known in the art), involving the use of strongest-signal estimates, and then next-strongest-signal estimates to cancel known interference in weaker signals.

FIG. 2B illustrates an embodiment of the invention including a plurality M of WTs 1109.1-1109.M, each comprising a corresponding combination of a WWAN Interface 1101.1-1101.M, an optional WWAN baseband processor 1102.1-1102.M, a combiner (such as a MIMO combiner 1103.1-1103.M), and a secondary data processor 1104.1-1104.M. The WTs 1109.1-1109.M are coupled together by a WLAN 1105, which is used to convey data between the WTs 1109.1-1109.M in order to enable cooperative antenna-array processing.

A WT, such as any of the WTs 1109.1-1109.M, includes any system or device provided with connectivity means to a WLAN 1105. Two or more WTs 1109.1-1109.M are preferably provided with WWAN interfaces, such as WWAN Interface 1101.1-1101.M. A plurality of WTs 1109.1-1109.M shares at least one WLAN 1105. In one embodiment of the invention, individual WTs 1109.1-1109.M may share the same WWAN service. This enables the WLAN group 110 to perform either or both transmit beam-forming and receive beam-forming (i.e., combining) operations.

In another embodiment of the invention, WTs 1109.1-1109.M may have connections to different WWANs and/or WWAN services. This enables the WLAN group 110 to achieve WWAN-service diversity. One or more WTs 1109.1-1109.M may optionally be capable of accessing multiple WWAN services. For example, many cellular handsets are provided with multi-mode capabilities, which give them the ability to access multiple WWANs. Some of the WTs 1109.1-1109.M may have no WWAN service. For example, one or more WTs 1109.1-1109.M may be out of range, in a WWAN dead spot, in an inactive WWAN state, or configured only to communicate via the WLAN 1105. WTs 1109.1-1109.M include, but are not limited to, cell phones, radio handsets, pagers, PDAs, wireless sensors, RFID devices, vehicle radio communication devices, laptop computers, wireless network access points, wireless routers, wireless switches, radio repeaters, transponders, and devices adapted to include satellite modems.

A WLAN group 110 may be adapted to perform any of various types and combinations of diversity and MIMO beam-forming. Three commonly used linear diversity-combining techniques include switched (or selection) combining, maximal ration combining (MRC), and equal gain combining (EGC). The impact of using diversity is expressed by the probability distribution $p(\gamma)$ of the SNR γ at the output of a

combining network. For switched diversity, wherein the combiner switches to the diversity branches (e.g., WTs) having the strongest signal, p(γ) is given by:

$$p(\gamma)=\frac{L}{\Gamma}e^{-\gamma/\Gamma}\left[1-e^{-\gamma/\Gamma}\right]^{L-1}$$

where Γ is the average SNR for each diversity branch and L is the number of diversity branches. MRC weights branches (e.g., WT signals received from the WWAN) having better SNR more heavily (i.e., with greater-magnitude weights) than branches having poorer SNR. The p(γ) for MRC is given by:

$$p(\gamma)=\frac{\gamma^{l-1}e^{-\gamma/\Gamma}}{\Gamma^{L}(l-1)!}$$

For EGC, p(γ) is given by:

$$p(\gamma)=\frac{L}{a\Gamma}e^{-\gamma/a\Gamma}\left[1-e^{-\gamma/a\Gamma}\right]^{L-1}$$

where $a=\sqrt{L/1.25}$ for L ≥ 2, and 1 otherwise.

These diversity techniques provide the greatest improvements when the branches are uncorrelated.

Adaptive arrays (or smart antennas) include antenna systems that automatically adjust to achieve some predetermined performance criterion, such as maximizing the signal to interference (S/I) ratio or link margin. Adaptive antenna techniques include switched beam, beam steering, and optimum combining (e.g., a linear spatial filtering approach that employs adaptation to closely match an output signal with a reference signal). A filtering process typically suppresses any artifacts that are not part of the desired incoming signal, including noise and interference.

In an optimum combining system, signals from each WT are down converted to baseband and converted to digital signals in an ADC. Noise associated with the front end of the down converter and other sources is naturally added to the signal. The resulting signal $x_m(k)$ is multiplied by a complex weighting function $w_m(k)$ and summed with similar signals from other WT antenna elements. The resulting sum signal $\Sigma w_m(k)x_m(k)$ is compared with a previously derived (and updated) reference signal (e.g., a training sequence). An error signal e(k) is generated and used to adjust the weight values in order

to minimize e(k). The objective is to derive the weighting function $w_m(k)$ that enables the best match between an estimated received signal and the actual transmitted signal. Alternatively, an adaptive WT array can be configured as an analog array wherein amplitude and phase adjustments (i.e., weighting functions) are performed at RF or IF frequencies.

In a MIMO communication system, signals transmitted from M_T transmit sources interfere with each other at a receiver comprising the WTs 1109.1-1109.M. Thus, interference cancellation (such as matrix inversion, channel transfer function inversion, and adaptive filtering) is employed by one or more MIMO combiners 1103.1-1103.M to separate the signals. The received signal is expressed by:

$$y = Hx + n$$

where the received signal, y, is a vector with M_R terms $\{y_i, i = 1,...,N_R\}$ corresponding to signals received by M_R (where M_R may have a value of 2 to M) receiver elements (i.e., WTs); x represents the transmitted signal, which is a vector having M_T terms $\{x_i, i = 1,...,M_T\}$ corresponding to signals transmitted by M_T transmitter elements; H is an $M_R x M_T$ channel-response matrix that characterizes the complex gains (i.e., transfer function, or spatial gain distribution) from the M_T transmission elements to the M_R receive elements; and n is AWGN having zero mean and zero variance.

In the case where the channel is characterized by flat fading, such as when a narrowband signal is employed (e.g., a sub-carrier of a multi-carrier signal), the elements in matrix H are scalars. The channel-response matrix H may be diagonalized by performing an eigenvalue decomposition of the $M_T x M_T$ correlation matrix R, where $R = H^H H$. Eigenvalue decomposition is expressed by:

$$R = EDE^H$$

where E is an $M_T x M_T$ unitary matrix with columns corresponding to the eigenvectors e_i of R, and D is an $M_T x M_T$ diagonal matrix wherein the diagonal elements are eigenvalues λ_i of R. The diagonal elements of D indicate the channel gain for each of the independent MIMO channels. Alternatively, other eigenvalue-decomposition approaches, such as singular value decomposition, may be employed.

The process for diagonalizing the MIMO channel response is initiated by multiplying a data vector d with the unitary matrix E to produce the transmitted vector x:

x = Es. This requires the transmitter to have some information corresponding to the channel-response matrix H, or related information thereof. The received vector y is then multiplied with $E^H H^H$ to provide an estimate of data vector s, which is expressed by:

$$\hat{s} = E^H H^H y = E^H H^H HEs + E^H H^H n = Ds + \hat{n}$$

where $\hat{n}$ is AWGN having a mean vector of 0 and a covariance matrix of $\Lambda_n = \sigma^2 D$.

The data vector s is transformed by an effective channel response represented by the diagonal matrix D. Thus, there are N_s non-interfering subchannels wherein each subchannel *i* has a power gain of λ_i^2 and a noise power of $\sigma^2\lambda_i$.

In the case where MIMO processing is performed on a multicarrier signal, or some other wideband signal that is spectrally decomposed into narrowband components, eigenmode decomposition may be performed for each frequency bin f_n.

If multicarrier spreading codes are employed (e.g., orthogonal CI codes), the channel-response matrix H can cause inter-symbol interference between spread data symbols, even in a SISO arrangement. Accordingly, the eigenmode decomposition technique described previously is applicable to multicarrier spreading and de-spreading. In one embodiment of the invention, eigenmode decomposition may be applied across two or more dimensions (e.g., both spatial and frequency dimensions). In another embodiment of the invention, eigenmode decomposition is applied across a single dimension (e.g., spatial or frequency dimensions). For example, multicarrier spreading codes (for example, orthogonal codes for data multiplexing in a given multiple-access channel) may be generated and processed via eigenmode decomposition.

Any of various water-filling or water-pouring schemes may be employed to optimally distribute the total transmission power over the available transmission channels, such as to maximize spectral efficiency. For example, water-filling can be used to adapt individual WT transmission powers such that channels with higher SNRs receive correspondingly higher fractions of the total transmit power. A transmission channel, as defined herein, may include a spatial (e.g., a sub-space) channel, a space-frequency channel, or some other channel defined by a set of orthogonalizing properties. Similarly, water filling may be used at a physically connected antenna array. The transmit power allocated to a particular transmission channel is typically determined by some predetermined channel-quality measurement, such as SNR, BER, packet error rate, frame

error rate, probability of error, etc. However, different or additional criteria may be employed with respect to power allocation, including, but not limited to, WT battery life, load balancing, spatial reuse, power-control instructions, and near-far interference.

In conventional water filling, power allocation is performed such that the total transmission power P_T is some predetermined constant:

$$P_T = \sum_{j \in K} \sum_{k \in L} P_j(k)$$

where $L = \{1,...,N_s\}$ signifies the available subspaces and $K = \{1,...,N_f\}$ represents the available sub-carrier frequencies f_n. The received SNR (expressed by $\psi_j(k)$) for each transmission channel is expressed by:

$$\psi_j(k) = \frac{P_j(k)\lambda_j(k)}{\sigma^2}, \text{ for } j = \{1,..., N_s\} \text{ and } k = \{1,...,N_f\}$$

The aggregate spectral efficiency for the N_sN_f transmission channels is expressed by:

$$C = \sum_{j=1}^{N_s} \sum_{k=1}^{N_f} \log_2\left(1 + \psi_j(k)\right)$$

The modulation and channel coding for each transmission channel may be adapted with respect to the corresponding SNR. Alternatively, transmission channels may be grouped with respect to their data-carrying capability. Thus, groups of transmission channels may share common modulation/coding characteristics. Furthermore, transmission channels having particular SNRs may be used for particular communication needs. For example, voice communications may be allocated to channels having low data-carrying capabilities. In some cases, transmission channels that fail to achieve a predetermined threshold SNR may be eliminated. In one embodiment of the invention, water filling is employed such that the total transmission power is distributed over selected transmission channels such that the received SNR is approximately equal for all of the selected channels.

An embodiment of the invention may employ reliability assessment for determining required processing and virtual-array size (i.e., the number of active WTs functioning as WWAN receiver elements). Received bits or symbols that have low reliability need more processing. Bits or symbols with high reliability may be processed with fewer elements (WTs) or provided with lower processing requirements. More

information needs to be combined for data streams having less reliability and less information may need to be combined for data streams having more reliability. Also, nodes with good channel quality should share more information than nodes having poor channel quality. Optimization algorithms, such as water-filling algorithms may be employed in the reliability domain.

FIG. 3A illustrates an embodiment of the invention in which a WLAN controller for a WLAN group of WTs first identifies received data streams that have the least reliability (e.g., reliability that is below a predetermined threshold) 301. Then the WLAN controller increases allocated processing (e.g., increases the number of receiver nodes, increases the number of processing nodes, employs a processing approach having higher computational complexity, etc.) 302 to those data streams. Data symbols are combined from the smallest number of nodes such that the reliability of the sum is maximized, or at least exceeds a predetermined threshold reliability. The processes 301 and 302 are repeated 303 until a predetermined result is achieved or until there is no more data left for processing.

FIG. 3B illustrates an embodiment of the invention in which a WLAN controller identifies received data streams that have the most reliability, or data streams having reliability that exceeds a predetermined reliability threshold 311. The WLAN controller decreases allocated processing (e.g., decreases the number of receiver nodes, decreases the number of processing nodes, employs a processing approach having lower computational complexity, etc.) 312 to those data streams. The processes 301 and 302 are repeated 303 until a predetermined result is achieved or until there is no more data left for processing. Aspects of the invention may provide for encoding information across channels having a wide range of reliability.

Embodiments of the invention may be adapted to perform blind signal separation (BSS), such as independent component analysis. For example, A. Jourjine, S. Rickard, and O. Yilmaz, "Blind Separation of Disjoint Orthogonal Signals: Demixing N Sources from 2 Mixtures," in *Proceedings of the 2000 IEEE International Conference on Acoustics, Speech, and Signal Processing*, Istanbul, Turkey, June 2000, vol. 5, pp. 2985–88, which is included herein by reference, describes a blind source separation technique that allows the separation of an arbitrary number of sources from just two mixtures,

provided the time-frequency representations of the sources do not overlap. The key observation in the technique is that, for mixtures of such sources, each time-frequency point depends on at most one source and its associated mixing parameters.

In multi-user wireless communication systems that employ multiple transmit and receive antennas, the transmission of user information through a dispersive channel produces an instantaneous mixture between user transmissions. BSS may be used in such instances to separate received transmissions, particularly when training sequences and channel estimation are absent. In an exemplary embodiment of the invention, a MIMO-OFDM protocol is provided across multiple independent WTs. Multiple transmissions are provided on at least one frequency channel and frequency techniques of BSS are employed to recover received signals.

In one embodiment of the invention, at least one data transmission source is adapted to convey its data across the WLAN to a plurality of WTs for transmission into the WWAN. In another embodiment of the invention, a plurality of WTs are adapted to receive data transmissions from a WWAN and couple said received data transmissions into a WLAN (with or without baseband processing) wherein centralized or distributed signal-processing means are provided for separating the data transmissions. Said signal-processing means includes any MIMO-processing techniques, including multi-user detection, space-time processing, space-frequency processing, phased-array processing, optimal combining, and blind source separation, as well as others.

In one embodiment of the invention, a vector of binary data symbols $b_i(n)$ are encoded with a convolutional encoder to produce a coded signal:

$$s_i(n) = b_i(n) * c(n)$$

where c(n) represents a convolutional code of length L'. A cluster of N coded symbols corresponding to an ith user, data source, or data stream is represented by:

$$s_{n,i} = [s_i(n), \ldots, s_i(n+N-1)]^T$$

The transmit signal is generated by performing an N-point IDFT to $s_{n,i}$ to produce:

$$S_{n,i} = [S_i(n,0), \ldots, S_i(n,N-1)]^T$$

where

$$S_i(n,k) = \sum_{m=0}^{N-1} s_i(n+m) e^{i2\pi km/N}$$

The values $S_i(n,k)$ are transmitted via at least one of N_t transmit antennas.

On the receive side, N_r receive antennas (typically, $N_r \geq N_t$) are employed. The signal received by a jth antenna is expressed by:

$$R_j(n) = \sum_{i=1}^{N_t} S_i(n) * h_{ij} + n_j(n)$$

where $n_j(n)$ represents the zero-mean AWGN introduced by the channel, and h_{ij} is the channel impulse-response of the ith transmit antenna to the jth receive antenna. The received signal can be interpreted as a convolutive mixture of the coded signals, where the channel matrix h represents the mixing system. An N-point DFT is applied to the received signals $R_j(n)$ to produce:

$$r_j = [r_j(n), \ldots, r_j(n+N-1)]^T$$

where

$$r_j(n) = \sum_{m=0}^{N-1} R_j(n+m) e^{-i2\pi km/N}$$

Typically, a sufficient guard interval, or cyclic prefix, is employed to eliminate inter-symbol interference.

The signals from the N_r receiver antennas are grouped with respect to frequency bin. An observation at a kth frequency bin are expressed by:

$$r_n(k) = [r_1(n+k), r_2(n+k), \ldots, r_{N_r}(n+k)]^T$$

$$= H(k)s(k) + n(k)$$

Thus, the observations $r_n(k)$ $\{k = 0, \ldots, N-1\}$ can be interpreted as an instantaneous mixture of the transmitted signals s(k), where H(k) represents the mixing system.

There are many approaches for estimating the transmitted signals s(k) from the received signals $r_n(k)$ that may be employed by the current invention. An exemplary embodiment of the invention employs BSS techniques. One class of BSS produces an output vector having the following form:

$$y(k) = W^H(k) r_n(k)$$

where W(k) is an N_r x N_t matrix that groups the coefficients of the separating system. The output y(k) can also be expressed by:

$$y(k) = G(k)s(k) + W^H(k)n(k)$$

where G(k) = W^H(k)H(k) represents the mixing/separating system. The goal of the separation process is to calculate the matrices W(k) so that the G(k) matrices are diagonal and the effects of noise W^H(k)n(k) are minimized. Many different approaches are applicable for achieving these goals.

A BSS algorithm (such as the one described in J. F. Cardoso, A. Souloumiac, "Blind Beamforming for non-Gaussian Signals," *IEEE-Proceedings-F*, vol. 140, no. 6, pp. 362-370, December 1993, which is incorporated by reference herein) may be employed to separate the instantaneous mixture in each frequency bin. Each output at frequency bin k' can be regarded as corresponding to a single source at bin k' multiplied by a particular gain introduce by the algorithm. The outputs y(k') are then used as reference signals in order to recover the sources at frequencies k' ± 1. For example, the separation matrices W(k) are determined by minimizing the mean-square error between the outputs y(k) = W^H(k)r_n(k) and reference signals y(k'). For a given frequency bin k:

$$W_o(k) = \arg\min_{W(k)} E\left[\left|y(k) - \alpha y(k')\right|^2\right]$$

where α is a real constant, which is selected with respect to the convolutional code:

$$\alpha = \frac{\sum_{p=0}^{L-1} c^2(p)}{\sum_{p=0}^{L-2} c(p)c(p+1)}$$

This is done to ensure G(k) = G(k'). The solution to the optimization problem is given by:

$$W_o(k) = \alpha R_{r_n}^{-1}(k) R_{r_n y}(k,k')$$

where

$$R_{r_n}(k) = E\left[r_n(k)x^H(k)\right] \text{ and}$$

$$R_{r_n y}(k,k') = E\left[r_n(k)y^H(k')\right]$$

FIG. 4A illustrates an embodiment of the invention wherein a plurality M of WTs 1109.1-1109.M is coupled to a MIMO processor 1103 via a WLAN 1105. In this

particular embodiment, a computer-processing terminal 1119 includes the MIMO processor 1103. The computer processing terminal 1119 is provided with WLAN-interface functionality, and may optionally include WWAN-interface functionality.

The computer-processing terminal 1119 may include any of a plurality WLAN-connected devices with signal-processing capability. For example, the computer-processing terminal 1119 may include one of the WTs 1109.1-1109.M. In one aspect of the invention, the computer-processing terminal 1119 is a WLAN controller. In another aspect of the invention, the computer processing terminal 1119 is a network gateway, router, or access point including a CPU adapted to process signals received from the plurality of WTs 1109.1-1109.M. Applications of embodiments of the invention include (but are not limited to) sensor networks, micro-networks, RFID systems, cellular networks, and satellite networks.

Each WT 1109.1-1109.M includes a baseband processor 1102.1-1102.M adapted to provide WWAN baseband (or IF) signals to the MIMO processor 1103 via the WLAN 1105. The MIMO processor 1103 is adapted to separate interfering WWAN data symbols in the WWAN baseband signals. The separated WWAN data symbols are then coupled back to data processors 1104.1-1104.M in the WTs 1109.1-1109.M.

FIG. 4B illustrates a functional embodiment of the invention in which MIMO processing operations (represented by MIMO processors 1103.1-1103.M) are distributed over two or more WTs 1109.1-1109.M. Baseband processors 1102.1-1102.M provide WWAN baseband signals to a WLAN controller 1106, which distributes the signals (and signal-processing instructions) to the MIMO processors 1103.1-1103.M. The separated WWAN data symbols are then coupled back to data processors 1104.1-1104.M.

FIG. 4C represents a functional embodiment of the invention. At least one WT provides WWAN access information 1140 to a WLAN controller. The WWAN access information typically includes necessary information (such as at least one WWAN channel assignment) to access at least one particular WWAN channel. The WWAN access information may optionally include performance information, such as WWAN channel estimates, link-bandwidth demand, link priority, and/or WWAN channel-quality measurements (e.g., SNR, BER, PER, latency etc.). This information is typically provided to the WLAN controller by one or more WTs.

The WLAN controller determines which WTs to activate 1141 for a particular WWAN communication link. This may be performed for either or both transmission and reception. The determination of which WTs will be active 1141 in a given WWAN link typically depends on a combination of factors, including (but not limited to) the number M of WTs required to achieve predetermined channel characteristics or access parameters, which WTs have the best WWAN channel quality, load balancing, power-consumption balancing, computational overhead, latency, and WLAN-access considerations. Accordingly, the WLAN controller sends control information via the WLAN to the WTs that includes state information (e.g., operating-mode assignments, such as active, standby, sleep, and awake).

The WLAN controller conveys WWAN information to the active WTs 1142. The WWAN information is derived from the WWAN access information and provided to the WTs to establish and/or maintain at least one WWAN link. Accordingly, the WWAN information may include WWAN channel assignments. The WWAN information may include beam-forming weights. Accordingly, the step of conveying WWAN information to the WTs 1142 may optionally include a preliminary signal-processing step (not shown), such as blind adaptive or deterministic weight calculation. This preliminary signal-processing step (not shown) may be distributed among a plurality of the WTs, or it may be performed in a centralized mode, such as by a single computing terminal. A distributed-computing mode may take various forms. In one mode, each of a plurality of WTs takes its turn functioning as a computing terminal. In another mode, multiple WTs function as computing terminals simultaneously.

Communications in the WWAN link are coordinated between the WTs in order to synchronize the transmitted and/or received WWAN signals 1143. A receiver embodiment of the invention provides for synchronization of the received WWAN signals such as to provide for coherent combining. A transmitter embodiment of the invention provides for synchronization of the transmitted WWAN signals from the WTs such as to enable coherent combining at some predetermined WWAN terminal.

An optional transmitter embodiment of the invention may employ synchronization to deliberately time-offset signals arriving at WWAN terminal in order to provide for transmit diversity by the WTs. In such embodiments, one or more of the

WT transmissions may be provided with time-varying complex weights (e.g., amplitudes and/or phases), such as described in S. A. Zekavat, C. R. Nassar and S. Shattil, "Combined Directionality and Transmit Diversity via Smart Antenna Spatial Sweeping, " proceedings of *38th Annual Allerton Conference on Communication, Control, and Computing, University of Illinois in Urbana-Champaign,* pp. 203-211, Urbana-Champaign, IL, USA, Oct. 2000, S. A. Zekavat, C. R. Nassar and S. Shattil, "Smart antenna spatial sweeping for combined directionality and transmit diversity," *Journal of Communications and Networks (JCN), Special Issue on Adaptive Antennas for Wireless Communications,* Vol. 2, No. 4, pp. 325-330, Dec. 2000, and S. A. Zekavat, C. R. Nassar and S. Shattil, "Merging multi-carrier CDMA and oscillating-beam smart antenna arrays: Exploiting directionality, transmit diversity and frequency diversity, " *IEEE Transactions on Communications*, Vol. 52, No. 1, pp. 110 – 119, Jan. 2004, which are incorporated by reference herein.

In an alternative embodiment of the invention, providing WWAN access information 1140 includes providing WWAN channel-performance information from the WTs to at least one WWAN terminal. Thus, conveying WWAN information to the WTs 1142 is performed by at least one WWAN terminal. An optional embodiment of the invention provide for at least one WWAN terminal determining which WTs in a WLAN group will operate in a given WWAN link and conveying that WWAN information 1142. Embodiments of the invention may provide capabilities to WWAN terminals to set up and adapt the formation of WLAN groups and determine which WTs belong to which WLAN groups. Such control capabilities may employ GPS positions of WTs to assist in assigning WTs to a WLAN group.

In one embodiment of the invention, step 1142 includes a preliminary signal-processing step (not shown) in which at least one WWAN terminal calculates cooperative-beamforming weights for the WTs based on channel-performance information provided by the WTs. Accordingly, the WWAN information includes cooperative-beamforming weights derived by at least one WWAN terminal and conveyed to at least one WT. Synchronization 1143 of the transmitted and/or received WWAN signals by the WTs may optionally be performed by at least one WWAN terminal.

Similarly, embodiments of the invention may provide for the application of time-varying weights to WWAN-terminal transmissions (such as described previously).

FIG. 4D illustrates a functional embodiment of the invention adapted to perform cooperative beamforming. WWAN channel information is provided 1144 for assigning subchannels 1145 and calculating cooperative beamforming (i.e., WT) weights 1146. The beamforming weights are then distributed to the appropriate WTs 1147.

Sub-channel assignments 1145 are typically performed with respect to a predetermined subchannel-quality threshold, such as SNR or BER. Subchannels having the required minimum performance may be assigned for transmission and/or reception. Sub-channel assignments 1145 may also provide for bit loading. Alternatively, sub-channel assignments 1145 may be performed without regard to sub-channel quality. In such cases, spreading or channel coding is performed to mitigate the effects of lost and compromised subchannels.

Weight calculations 1146 may be achieved by either deterministic or blind adaptive techniques. The calculations may be performed by one or more WTs, or alternatively, by at least one WWAN terminal. Cooperative beamforming weights may be provided to achieve at least one form of array processing benefit, including diversity combining, interference cancellation, and spatial reuse.

FIG. 5A illustrates a functional embodiment of the invention that may be implemented by hardware and/or software. A plurality of transmitted WWAN signals are received 1150 by a plurality of WTs. Baseband (or IF) WWAN information is derived 1151 from the received WWAN signals. For example, in an OFDM system, a baseband WWAN signal s_k received by a kth WT can be represented by a linear superposition of up to M transmitted data symbols d_i $\{i = 1,...,M\}$ weighted by complex channel weights α_{ik}:

$$s_k = \sum_{i=1}^{M} \alpha_{ik} d_i + \eta_k$$

Baseband WWAN signals (which typically include the complex channel weights α_{ik}), are optionally transmitted 1158 into a WLAN for distribution to one or more other WTs. Accordingly, data (including baseband WWAN signals s_k, complex channel weights α_{ik}, and/or MIMO weights β_{il}) from the one or more other WTs is received 1152 from the WLAN. MIMO processing 1153 is performed to produce at least one set of MIMO

weights β_{il} and/or estimated transmitted data symbols d_i, which may optionally be transmitted 1159 to at least one other WT via the WLAN. Baseband information recovery 1154 may optionally be performed on the estimated transmitted data symbols d_i. For example, baseband operations may include despreading, demodulation, error correction (e.g., channel decoding), demultiplexing, de-interleaving, data formatting, etc.

FIG. 5B illustrates an alternative functional embodiment of invention that may be implemented by hardware and/or software. In this case, WWAN baseband information that does not include MIMO weights are received 1155 from at least one other WT via the WLAN. Thus, MIMO processing 1153 includes generating MIMO weights, which may be transmitted 1159 to one or more WTs via the WLAN. The functional embodiment illustrated in FIG. 5B is particularly applicable to a WT functioning as a computer-processing terminal in a WLAN group. In the case where the subject WT functions as the only MIMO-processing terminal in a given WLAN group, the functional embodiment may be characterized solely by steps 1155, 1153, 1154, and optional step 1159. Furthermore, the functional embodiments described herein may be adapted to perform other array-processing operations in addition to, or instead of, MIMO.

FIG. 6A illustrates functional and apparatus embodiments of the present invention pertaining to one or more WTs, such as WT 1109. In particular, a WWAN interface 1161 is coupled to a beam-forming system 1162, which is coupled to a WLAN interface 1163. The beam-forming system 1162 employs data received from the WLAN interface 1163 (and optionally, from data received from the WWAN interface 1161) to perform beam-forming operations. The WLAN interface 1163 is adapted to provide WLAN data communications with at least one other WT (not shown). The beam-forming system 1162 may be adapted to provide either or both WWAN transmission and reception beam-forming operations.

FIG. 6B illustrates a preferred embodiment of the invention that may be employed as either or both apparatus and functional embodiments. A WWAN interface 1161 includes an RF front-end 1611, a DAC/ADC module 1612, a pulse-shaping filter 1613, a modulator/demodulator module 1614, an equalizer modulator 1615 that optionally employs pre-equalization means, a multiplexer/ demultiplexer module 1616, and a baseband-processing module 1617. The WWAN interface also includes a network-

control module 1618 that is responsive to both WWAN control signaling and WLAN-control signals configured to convey WWAN control information to the WWAN interface 1161.

A WLAN interface 1163 includes an RF front-end 1631, a DAC/ADC module 1632, a pulse-shaping filter 1633, a modulator/demodulator module 1634, an equalizer modulator 1635 that optionally employs pre-equalization means, a multiplexer/ demultiplexer module 1636, and a baseband-processing module 1637. A beam-forming module 1162 is adapted to process signals from either or both baseband modules 1617 and 1637. The beam-forming module 1162 may be adapted to process local data symbols generated by a local data source 1160.

As described previously, the beam-forming module 1162 may be adapted to perform beam-forming operations on baseband WWAN signals received from either or both the WWAN interface 1161 and the WLAN interface 1163. Specifically, the beam-forming module 1162 may be adapted to perform beam forming by utilizing baseband WWAN signals, channel weights (or other channel-characterization information), beam-forming weights (such as MIMO weights), and/or baseband data symbols. Baseband data symbols may be received from the local data source 1160, from local data sources on other WTs, and/or from estimated data generated by one or more external beam-forming modules (e.g., beam-forming modules on other WTs). Optionally, the beam-forming module 1162 may be configured to adjust equalization and/or pre-equalization 1615.

In an exemplary embodiment of the invention, the beam-forming module 1162 is configured to process baseband WWAN signals received from the baseband-processing module 1617 and the WLAN interface 1163. Information output from the beam-forming module 1162 is conveyed to at least one of the WLAN interface 1163 and a local data sink 1169. Estimated WWAN data symbols output by the beam-forming module 1162 may optionally be processed by the baseband-processing module 1617 or the local data sink 1169. For example, the baseband-processing module 1617 may be configured to perform various types of signal processing, including error correction (such as Viterbi decoding), constellation mapping, and data formatting on data output by the beam-forming module 1162. The resulting processed data may then be coupled to the local data

sink 1169 and/or the WLAN interface 1163. Alternatively, the local data sink 1169 may perform the previously described signal-processing types.

Beam forming is performed cooperatively with other WTs to provide predetermined WWAN spatial processing for transmitted and/or received WWAN signals. Thus, a network-function adapter 1165 may be employed to provide WWAN channel-access information to one or more WTs. For example, some embodiments of the invention require multiple WTs to function as a single WT. In this case, each WT is provided with WWAN-access information corresponding to the single WT it is configured to spoof. The network function adapter 1165 may be configured to generate WWAN-access information to be distributed to at least one other WT and/or it may be configured to receive WWAN-access information from the WLAN interface 1163 and convey it to the network-control module 1618 in the WWAN interface 1161.

WWAN-access information typically includes channelization (or some other form of multiple access) information used to transmit and/or receive data from the WWAN. For example, WWAN-access information may take the form of user identification sequences, assigned time slots, frequency band assignments, and/or multiple-access code assignment.

In some embodiments of the invention, a particular WT may be required to function as multiple WTs. In this case, WWAN-access information is conveyed to the network-control module 1618 and data is configured to be appropriately multiplexed and/or demultiplexed relative to a plurality of multiple-access channels.

The network-function adapter 1165 may be used to convey other WWAN control information to WTs, including (but not limited to) power-control commands, WWAN routing tables, and synchronization information. The network-function adapted 1165 may be configured to alter or adapt the WWAN-control information that it receives from either or both the WWAN interface 1161 and the WLAN interface 1163. For example, WWAN power-control commands received by one or more WTs may be adapted by the network-function adapter 1165 prior to being conveyed to network-control modules (such as network-control module 1618) on multiple WTs. Power control may be adapted by one or more network-function adapters 1165 for particular WTs depending on their WWAN

channel quality and power. Alternatively, the network-function adapter 1165 may adapt the number M of WTs servicing a given link in response to WWAN control information.

In some embodiments of the invention, it is advantageous to employ a single decision system with regard to network-function adaptation 1165. In one mode of operation, the network-function adapter 1165 of only one of a plurality of WTs assigned to a particular WWAN channel is adapted to convey WWAN control information to the other WTs. In each of the other WTs, the associated network-function adapter 1165 identifies the WWAN control information received from the WLAN and couples it to the network-control module 1618. Thus, the network-function adapter 1165 may be adapted to instruct the network-control module 1618 to disregard one or more types of WWAN control information received from the WWAN interface 1161. One or more network-function adapters (such as network-function adapter 1165) may be adapted to synchronize WT responses to WWAN control information.

In another embodiment of the invention, each WT is responsive to WWAN control information that it receives. In yet another embodiment, each of a plurality of WWAN multiple-access channels is preferably controlled by a separate network-function adapter 1165. These and other adaptations and permutations of network function may be embodied by functional aspects of the network-function adapter 1165.

One embodiment of the invention employs the functionality of a group of WTs corresponding to FIG. 1C with respect to the transceiver embodiment shown in FIG. 6B. In a transmission configuration, a serial data stream $s(n)$ from the local data source 1160 of a particular WT is channel coded to produce coded data stream $u(n)$, which is grouped in blocks of size N: $\mathbf{u}(i) = [u(iN), u(iN+1),\ldots, u(iN+N-1)]^T$. In this case, N is chosen to equal the number M of WTs employed as antenna elements. The N-1 coded data symbols $u(n)$ is distributed to the other N-1 WTs via the WLAN interface 1163.

At each WT's Mux/DeMux block 1615, a particular data symbol $u(n)$ is mapped into a frequency bin vector. In one aspect of the invention, each data symbol $u(n)$ is provided with both a unique frequency bin and a unique WT, such as to achieve optimal diversity benefits. This takes the form of a frequency-bin vector having all zeros except for one bin corresponding to $u(n)$. This scheme can be used to achieve low transmitted PAPR. In other embodiments, alternative WT/frequency-bin combinations may be

employed. For example, multiple serial data streams $s(n)$ may be provided to the frequency-bin vector. Redundant symbols may be provided. Alternatively, the data $s(n)$ may be spread across frequencies and/or WTs.

At each Mod/DeMod block 1614, an IFFT is applied to each data block to produce:

$$\tilde{u}(i) = F^H u(i)$$

where $\mathbf{F}$ is the NxN FFT matrix with $\mathbf{F}_{nm} = N^{-1/2}\exp(-j2\pi nm/N)$. A cyclic prefix of length N_{CP} is inserted in $\tilde{u}(i)$ to produce $\tilde{u}_{CP}(i) = \beta T_{CP}\tilde{u}(i)$, which has length $N_T = N+N_{CP}$. The term $\mathbf{T}_{CP} = [\mathbf{I}_{CP}^T \mathbf{I}_N^T]^T$ represents the cyclic prefix insertion in which the last N_{CP} rows of the NxN identity matrix $\mathbf{I}_N$ (denoted by $\mathbf{I}_{CP}$) are concatenated with identity matrix $\mathbf{I}_N$. The term β is the power loss factor, $\beta = \sqrt{N/N_T}$.

The block $\tilde{u}_{CP}(i)$ is serialized to yield $\tilde{u}_{CP}(n)$, which is then pulse shaped 1613, carrier modulated 1612, amplified, and transmitted 1611 via multiple antenna elements through a channel. The channel impulse response $h(n)$ includes the effects of pulse shaping, channel effects, receiver filtering, and sampling.

In a receiver configuration of the invention, each of a plurality of WTs is adapted to receive a different transmitted symbol on a different orthogonal carrier frequency. For a WT employing a square-root Nyquist receive filter, the received samples are expressed by:

$$x(n) = \tilde{u}_{CP}(n) * h(n) + v(n)$$

where $v(n)$ is additive white Gaussian noise (AWGN). The received samples are grouped into blocks of size N_T: $\mathbf{x}_{CP}(i) = [x(iN_T), x(iN_T+1),\ldots, x(iN_T+N_T-1)]^T$. The first N_{CP} values of $\mathbf{x}_{CP}(i)$ corresponding to the cyclic prefix are discarded, which leaves N-length blocks expressed by: $\mathbf{x}(i) = [x(iN_T+N_{CP}), x(iN_T+ N_{CP}+1),\ldots, x(iN_T+N_T-1)]^T$. $\mathbf{H}$ is defined as an NxN circulant matrix with $\tilde{H}_{n,m} = h((n-m)_{\mathrm{mod}\,N})$. The block input-output relationship is expressed as: $\tilde{x}(i) = \beta\tilde{H}\tilde{u}(i) + \tilde{\eta}(i)$, where $\tilde{\eta}(i) = [v(iN_T+N_{CP}), v(iN_T+ N_{CP}+1),\ldots, v(iN_T+N_T-1)]^T$ is the AWGN block. Applying the FFT to $\tilde{x}(i)$ yields:

$$\begin{aligned} x(i) &= F\tilde{x}(i) = \beta F\tilde{H}F^H u(i) + \tilde{\eta}(i) \\ &= \beta D_H u(i) + \eta(i) \end{aligned}$$

where

$$D_H = diag\left[H\left(e^{j0}\right), H\left(e^{j(2\pi/N)}\right), \ldots H\left(e^{j(2\pi(N-1)/N)}\right)\right] = F\tilde{H}F^H$$

and $H(e^{j2\pi f})$ is the frequency response of the ISI channel; $H\left(e^{j2\pi f}\right) = \sum_{n=0}^{N_{CP}} h(n)e^{-j2\pi fn}$. An equalizer followed by a decoder uses $\mathbf{x}(i)$ to estimate the data symbols encoded on $\mathbf{u}(i)$.

Preferred embodiment of the invention may employ Spread-OFDM, which involves multiplying each data block $\mathbf{s}(n)$ by a spreading matrix $\mathbf{A}$:

$$\mathbf{u}(n) = \mathbf{A}\mathbf{s}(n)$$

In the case where CI spreading codes are employed, $\mathbf{A}_{nm} = \exp(-j2\pi nm/N)$. This maps the data symbols to pulse waveforms positioned orthogonally in time. This choice of spreading codes also gives the appearance of reversing the IFFT. However, the resulting set of pulse waveforms is a block, rather than a sequence, wherein each waveform represents a cyclic shift within the block duration T_s, such as described in U.S. Pat. Appl. Pubs. 20030147655 and 20040086027, which are both incorporated by reference.

FIG. 7A illustrates a functional embodiment of the invention related to calculating MIMO weights in a cooperative-beamforming network. A plurality of WTs provide received baseband information from a WWAN channel 1701 that includes a training sequence and/or a data sequence having a predetermined constellation of values. WWAN MIMO processing is performed 1702 on the received baseband information to derive a plurality of array-processing weights β_i, which are then distributed 1703 via the WLAN to a predetermined plurality of WTs.

FIG. 7B illustrates a functional embodiment of the invention adapted to calculate transmitted data symbols received by a cooperative-beamforming network. A plurality of WTs provide received baseband information from a WWAN channel 1701 that includes a data sequence having a predetermined constellation of values. WWAN MIMO processing is performed 1704 on the received baseband information to derive a plurality of estimated data symbols d_i, which are then conveyed 1705 via the WLAN to at least one destination WT. The WWAN MIMO processing 1704 may optionally include providing for any of a set of signal-processing operations, including filtering, demodulation, demultiplexing, error correction, and data formatting.

FIG. 8A illustrates a functional embodiment for a method and apparatus of the invention. Specifically, a data source 1800 is adapted to distribute a plurality of data symbols via a WLAN channel 199 to a plurality N_t of WTs 1806.1-1806.N_t, which are adapted to transmit the data symbols into at least one WWAN channel 99. Although the functional embodiment shown in FIG. 8A is illustrated with respect to uplink WWAN functionality, the functional blocks may alternatively be inverted to provide for downlink WWAN functionality.

The data source and the WTs 1806.1-1806.N_t include appropriate WLAN-interface equipment to support distribution of the data symbols to the WTs 1806.1-1806.N_t. For example, the WTs 1806.1-1806.N_t are shown including WLAN-interface modules 1801.1-1801.N_t. The WLAN channel 199 may optionally include additional network devices that are not shown, such as routers, access points, bridges, switches, relays, gateways, and the like. Similarly, the data source 1800 and/or the WTs 1806.1-1806.N_t may include one or more said additional network devices. The data source 1800 may include at least one of the WTs 1806.1-1806.N_t.

A coder 1803.1-1803.N_t in each of the WTs 1806.1-1806.N_t is adapted to receive a baseband data sequence from the associated WLAN-interface module 1801.1-1801.N_t and provide coding, such as channel coding, spreading, and/or multiple-access coding. A coded data sequence output from each coder 1803.1-1803.N_t is mapped into frequency bins of multicarrier generators, such as IDFTs 1804.1-1804N_t. This embodiment may be employed to produce multicarrier signals or to synthesis single-carrier signals from a plurality of spectral components. Alternatively, other types of multicarrier generators may be employed, such as quadrature-mirror filters or DSPs adapted to perform other transform operations, including Hadamard transforms. The resulting multicarrier signals are coupled into the WWAN channel 99 by associated WWAN-interface modules 1805.1-1805.N_t.

For each flat-fading subcarrier frequency channel, the WWAN channel is characterized by channel responses 1890.1-1890-N_t and 1899.1-1899-N_t of a mixing system. The channel responses 1890.1-1890-N_t and 1899.1-1899-N_t represent elements of H, an $N_r x N_t$ channel-response matrix that characterizes the complex gains (i.e., transfer function, or spatial gain distribution) from the N_t transmission elements to the N_r receive

elements; and $n_i(n)$ represents an AWGN contribution having zero mean and zero variance.

There are N_r receiver elements comprising WWAN-interface modules 1815.1-1815.N_r and filter banks, such as DFTs 1814.1-1814.N_r, coupled to at least one MIMO combiner 1810. The MIMO combiner 1810 is adapted to perform any number of signal-processing operations, including decoding received data symbols. In one embodiment of the invention, the MIMO combiner 1810 is adapted to perform diversity combining. In another embodiment of the invention, the MIMO combiner 1810 is adapted to perform spatial (e.g., sub-space) processing. Furthermore, many other applications and embodiments of the invention may be achieved using the functional description (or minor variations thereof) depicted in FIG. 8A.

FIG. 8B illustrates a functional embodiment of the invention that may be incorporated into specific apparatus and method embodiments. In particular, WWAN signals received from a WWAN channel 99 by a plurality N_r of WTs 1836.1-1836.N_r are conveyed via a WLAN channel 199 to a MIMO combiner 1830.

In this case, WWAN data symbols are encoded by one or more coders (such as coders 1821.1-1821.N_t), impressed on a plurality of subcarriers by IDFTs 1822.1-1822.N_t, and coupled into the WWAN channel 99 by a plurality of WWAN-interface modules 1825.1-1825.N_t. Received WWAN signals are coupled from the WWAN channel 99 by a plurality N_r of WTs 1836.1-1836.N_r. Each WT 1836.1-1836.N_r includes at least one WWAN-interface module (such as WWAN-interface modules 1831.1-1831.N_r), a filter bank (such as DFTs 1834.1-1834.N_r), and a WLAN-interface module (such as 1835.1-1835.N_r).

WWAN signals received by each WT 1836.1-1836.N_r is converted to a baseband data sequence, separated into its frequency components (by the DFTs 1834.1-1834.N_r), and then adapted for transmission into the WLAN channel 99. A MIMO combiner 1830 is adapted to receive WLAN transmissions, recover the frequency components, and perform MIMO processing to generate estimates of the transmitted WWAN data symbols. The MIMO combiner 1830 and/or the WTs 1836.1-1836.N_r may be adapted to perform decoding. In one embodiment of the invention, the MIMO combiner 1830 may include one or more of the WTs 1836.1-1836.N_r.

FIG. 8C illustrates an embodiment of the invention in which WTs 1836.1-1836.N_r are adapted to perform time-domain (e.g., Rake) processing. Specifically, each WT 1836.1-1836.N_r includes a Rake receiver 1854.1-1854.N_r. The embodiment illustrated in FIG. 8C is particularly suited to performing MIMO operations on received direct-sequence signals, such as DS-CDMA signals.

In a DS-CDMA system, a kth WWAN transmission signal $s^k(t)$ that includes N code bits $\{b^k[n]\}_{n=1}^{N}$ is given by:

$$s^k(t)=\sum_{n=0}^{N-1} b^k[n] g_{T_b}(t-nT_b) g_\tau(t) a^k(t-iT_b)\cos(2\pi f_c t)$$

where $a^k(t)=\sum_{i=0}^{G-1} C_i^k g_{T_c}(t-iT_c)$, $C_i^k \in \{-1,1\}$ is the DS spreading signal, G represents processing gain, T_c is the chip duration, T_b is the bit duration, and $g_{T_c}(t)$, $g_{T_b}(t)$, and $g_\tau(t)$ represent the chip, bit, and transmitted pulse shapes, respectively.

A plurality M of WTs linked together by a WLAN comprises elements of an M-element antenna array capable of receiving K≤M transmission channels. In a frequency-selective channel, the received signal at the array is:

$$r(t)=\sum_{k=1}^{K}\sum_{l=0}^{L^k-1}\sum_{n=0}^{N-1} \alpha_l^k \vec{V}(\vartheta_l^k) b_k[n] g(t-\tau_l^k-nT_b)\cos(2\pi f_c t+\varphi_l^k)+\upsilon(t)$$

where $\vec{V}(\vartheta)$ is an array-response vector, K is the number of received transmission channels, L^k is the number of distinct fading paths corresponding to the kth user, α_l^k is the fade amplitude associated with path l and user k, $\varphi_l^k = U[0,2\pi]$ represents the associated fade phase, τ_l^k is the path time-delay (which occurs below a predetermined duration threshold T_{max}), and ϑ_l^k denotes angle of arrival. The array response vector $\vec{V}(\vartheta)$ is expressed by:

$$\vec{V}(\vartheta)=\begin{bmatrix}1 & e^{-2\pi d_1 \cos\theta/\lambda} & \dots & e^{-2\pi d_{M-1}\cos\theta/\lambda}\end{bmatrix}$$

where d_m is the antenna separation, and λ is the wavelength corresponding to carrier frequency f_c. For a jth user's l^{th} path, the nth bit at the beamformer output is given by:

$$z_l^j[n]=W^H(\vartheta_l^k)\int_{+(n-1)T_b}^{+nT_b} r(t)\cos(2\pi f_c t+\varphi_l^j) a^j(t-\tau_l^j-(n-1)T_b)dt$$

where $W(\vartheta_l^k)$ is the weighting vector of the beamforming system. $z_l^k[n]$ can be expressed by four components:

$$z_l^k[n] = S_i^j[n] + ISI_i^j[n] + IXI_i^j[n] + \upsilon_i^j[n]$$

where S is the desired signal, ISI is inter-symbol interference, IXI is cross interference (i.e., multiple-access interference), and v is the AWGN contribution. These components can be expressed as follows:

$$S_l^j[n] = \alpha_l^j W^H(\vartheta_l^j)\vec{V}(\vartheta_l^j)b^j[n]G$$

$$ISI_i^j[n] = \sum_{\substack{h=0 \\ h\neq l}}^{L^k-1}\sum_{n=0}^{N-1}\alpha_l^k W^H(\vartheta_h^j)\vec{V}(\vartheta_l^k)b^j[n]\cos(\varphi_h^j - \varphi_l^j)R_{jj}(\tau_h^j - \tau_l^j - nT_b)$$

$$IXI_i^j[n] = \sum_{\substack{k=1 \\ k\neq j}}^{K}\sum_{\substack{h=0 \\ h\neq l}}^{L^k-1}\sum_{n=0}^{N-1}\alpha_l^k W^H(\vartheta_h^k)\vec{V}(\vartheta_l^j)b^j[n]\cos(\varphi_h^k - \varphi_l^j)R_{kj}(\tau_l^j - \tau_h^k - nT_b)$$

$$\upsilon_l^j[n] = \int_{+(n-1)T_b}^{+nT_b} W^H(\vartheta_l^j)n(t)a^j(t-\tau_l^j)\cos(2\pi f_c t + \varphi_l^j)dt$$

where $W^H(\vartheta_l^j)\vec{V}(\vartheta_l^j)$ represents the spatial correlation, φ_l^j and τ_l^j are the random phase and time delay for the jth user's l^{th} path, G is the processing gain, and R_{jj} and R_{kj} are the partial auto-correlation and cross-correlation of the direct sequence code(s):

$$R_{kj}(\tau) = \int_{-T}^{T} a^k(t)a^j(t-\tau)dt$$

Maximal ratio combining produces an output:

$$z^j[n] = \sum_{l=0}^{L-1}\alpha_l^j z_l^j[n]$$

which can be processed by a decision processor. In this case, the BER is given by:

$$P_e = \int_0^{\infty} Q(2r_o)f(r_o \mid \bar{r}_o)dr_o$$

where $\bar{r}_o$ is the mean value of the instantaneous SNIR, r_o, and Q( ) represents the complementary error function.

It should be appreciated that the WTs may be adapted to perform either or both time-domain (e.g., Rake) or frequency-domain processing as part of a receiver operation. Signals received by a plurality of WTs may be combined with respect to any combining technique, including EGC, MRC, Minimum Mean Squared Error Combining, Successive

Interference Cancellation, and other matrix-reduction/matrix diagonalization techniques. Array-processing operations may include combinations of local and global processing. For example, diversity combining may be performed at each multi-element WT. Then signals from each WT may be combined (e.g., in a central processor) to perform sub-space (e.g., directional) processing. Other combinations of local and global processing may be employed. Similarly, combinations of sub-space processing (i.e., capacity enhancement) and diversity combining (i.e., signal-quality enhancement) may be performed. It should also be appreciated that the WTs may be adapted to perform either or both time-domain and frequency-domain processing for transmission. Thus, appropriate delays or complex weights may be provided to WT transmissions to produce a coherent phase front that converges at a predetermined WWAN destination node.

FIG. 9A illustrates an optional transmission embodiment of the present invention. That is, method and apparatus configurations can be inferred from the following descriptions. A data source 1900 is adapted to provide data for processing by an array processor, such as MIMO processor 1902. Optionally, other types of array processors may be provided. A physical (e.g., wired) connection 1902 and/or a wireless connection 1901 couple the data between the data source 1900 and the MIMO processor 1902. The wireless connection 1901 is enabled by a WLAN 1999. The MIMO processor 1902 is adapted to provide MIMO processing to the data, such as providing complex channel weights, providing spreading weights, and/or providing channel coding.

In one exemplary embodiment of the invention, MIMO processor 1902 provides convolutional or block channel coding to the data, which effectively spreads each data bit over multiple coded data bits. The resulting coded data bits are then grouped in serial blocks by the MIMO processor 1902. Signal-block outputs from the MIMO processor 1902 are provided with serial-to-parallel conversion by the WLAN 1999 (which is denoted by S/P 1914) and distributed to a plurality of WTs 1906.1-1906.M.

Each WT 1906.1-1906.M has a WLAN interface 1907.1-1907.M adapted to receive and demodulate the data received from the MIMO processor 1902. The MIMO processor 1902 is accordingly equipped with a WLAN interface that is not shown. The MIMO processor 1902 is typically comprised of one or more WTs 1906.1-1906.M. In

some embodiments of the invention, MIMO processor 1902 may include at least one computer-processing terminal that does have a WWAN interface.

Data received from the MIMO processor 1902 is then modulated 1908.1-1908.M by each WT 1906.1-1906.M for transmission into a WWAN channel by a corresponding WWAN interface 1909.1-1909.M. Modulation 1908.1-1908.M typically includes mapping blocks of data bits to data symbols, which are then mapped to a modulation constellation. Modulation 1908.1-1908.M may also include channel coding and/or data interleaving. In an exemplary embodiment of the invention, modulation 1908.1-1908.M includes the application of complex WWAN channel weights. Such channel weights may optionally be provided by the MIMO processor 1902. In alternative embodiment of the invention, modulators 1908.1-1908.M provide a predetermined delay profile (provided by the MIMO processor 1902) to the data to be transmitted into the WWAN channel.

FIG. 9B illustrates a functional flow chart that pertains to transmitter apparatus and method embodiments of the invention. One or more data sources 1920.1-1920.K are coupled via a WLAN 1999 to a plurality M of WTs 1926.1-1926.M. Each WT 1926.1-1926.M includes a WLAN interface 1927.1-1927.M, an array processor (such as a MIMO processor 1926.1-1926.M), and a WWAN interface 1929.1-1929.M.

The data sources 1920.1-1920.K optionally include baseband-processing capabilities, such as channel coding, interleaving, spreading, multiplexing, multiple-access processing, etc. The data sources 1920.1-1920.K include WLAN interfaces (not shown). The data sources 1920.1-1920.K may include one or more WTs 1926.1-1926.M.

The WLAN interfaces 1927.1-1927.M include apparatus and means for converting received signals that were formatted for transmission in the WLAN 1999 into baseband data signals. The MIMO processors 1926.1-1926.M are adapted to provide for frequency-domain and/or time-domain MIMO operations on the baseband data signals received from the WLAN interfaces 1927.1-1927.M. Alternatively, the MIMO processors 1926.1-1926.M may be adapted to perform phase operations at WWAN carrier frequencies transmitted by the WWAN interfaces 1929.1-1929.M. The WWAN interfaces 1929.1-1929.M provide any necessary baseband, IF, and RF operations necessary for transmitting data in a WWAN channel.

FIG. 10A illustrates software components of a transmission embodiment of the invention residing on a computer-readable memory 1950. An array-processing weighting source-code segment 1951 is adapted to generate a plurality of array-element weights for an antenna array comprised of a plurality of WTs coupled to at least one WWAN. The array-element weights may include at least one of frequency-domain weights (e.g., complex sub-carrier weights) and time-domain weights (e.g., weighted Rake taps). The array-processing weighting source-code segment 1951 is adapted to accept as input at least one of a set of information inputs, including data signals for transmission into the WWAN, training signals (e.g., known transmission symbols) received from the WWAN, data signals (e.g., unknown transmission symbols) received from the WWAN, WWAN channel estimates, and WWAN-control information.

The array-processing weighting source-code segment 1951 is adapted to provide as output at least one of a set of information signals, including WWAN weights and weighted data for transmission into the WWAN (i.e., weighted WWAN data). A WLAN distribution source code segment 1952 is provided for distributing either or both WWAN weights and weighted WWAN data received from source-code segment 1951 to a plurality of WTs via at least one WLAN. The WLAN distribution source code segment 1952 may optionally function to couple at least one of a set of information inputs to the source-code segment 1951, including data signals for transmission into the WWAN (such as generated by other WTs), training signals received from the WWAN, data signals received from the WWAN, WWAN channel estimates, and WWAN-control information.

FIG. 10B illustrates software components of a receiver embodiment of the invention residing on a computer-readable memory 1960. An array-processing weighting source-code segment 1961 is adapted to generate a plurality of array-element weights for an antenna array comprised of a plurality of WTs coupled to at least one WWAN. The array-element weights may include at least one of frequency-domain weights (e.g., complex sub-carrier weights) and time-domain weights (e.g., weighted Rake taps). The array-processing weighting source-code segment 1961 is adapted to accept as input at least one of a set of information inputs, including training signals (e.g., known transmission symbols) received from the WWAN, data signals (e.g., unknown

transmission symbols) received from the WWAN, WWAN channel estimates, and WWAN-control information.

The array-processing weighting source-code segment 1961 is adapted to provide as output at least one of a set of information signals, including WWAN weights, weighted received WWAN data for transmission into the WLAN (i.e., weighted received WWAN data), weighted WWAN data received from a plurality of WTs connected by the WLAN and then combined (i.e., combined weighted WWAN data), and estimates of said combined weighted WWAN data. A WLAN distribution source code segment 1962 is provided for distributing at least one of a set of signals (including the WWAN weights, the weighted received WWAN data, the combined weighted WWAN data, and the estimates said combined weighted WWAN data) to a plurality of WTs via at least one WLAN. The WLAN distribution source code segment 1962 may optionally function to couple at least one of a set of information inputs to the source-code segment 1961, including WWAN data signals received by other WTs, training signals received from the WWAN by other WTs, WWAN channel estimates (either of both locally generated and received from other WTs), WWAN-control information, weights received from at least one other WT, and weighted WWAN data received from at least one other WT.

Since software embodiments of the invention may reside on one or more computer-readable memories, the term computer-readable memory is meant to include more than one memory residing on more than one WT. Thus, embodiments of the invention may employ one or more distributed-computing methods. In one embodiment of the invention, the computer-readable memory 1950 and/or 1960 further includes a distributed-computing source-code segment (not shown). It will be appreciated that many different types of distributed computing, which are well known in the art, may be performed. The WLAN distribution source code segment 1952 and/or 1962 may be adapted to provide for synchronizing transmitted and/or received WWAN signals.

Embodiments of the invention described herein disclose array-processing methods (including software implementations) and apparatus embodiments employed in a WWAN and coordinated between a plurality of WTs connected via at least one WWAN. WTs in a WLAN group typically share the same WWAN access. However, some embodiments of the invention provide for WTs with access to different WWANs. Furthermore, one or

more WTs may have access to a plurality of WWANs and WWAN services. In some cases, one or more WTs may not be configured to access any WWAN.

In some embodiments of the invention, the computer-readable memory 1950 and/or 1960 further includes a WLAN setup source-code segment (not shown) capable of establishing and/or dynamically reconfiguring at least one WLAN group. For example, WTs may convey location information (e.g., GPS) and/or signal-strength information (e.g., in response to a WLAN probing signal) to the WLAN setup source-code segment (not shown). The WLAN setup source-code segment (not shown) may reside on one or more of the WTs and/or at least one WWAN terminal, such as a cellular base station.

The WLAN setup source-code segment (not shown) may provide one or more WLAN group configuration functions, including determining the number of WWAN-enabled WTs, the total number of WTs in the WLAN group, which WTs are active (and inactive), which WTs are in the WLAN group, and selecting which WT(s) has (have) network-control functionality. The WLAN setup source-code segment (not shown) may be adapted to perform WWAN channel quality analysis functions, including determining WWAN link performance (relative to one or more WTs) from training sequences or pilot signals, performing WWAN-channel estimation, receiving link performance or channel estimates from the WWAN, and performing channel-quality calculations (e.g., SNR, BER, PER, etc.).

The WLAN setup source-code segment (not shown) may select which WTs are WWAN-enabled based on one or more criteria points, including WWAN link performance, WLAN link performance, required transmission and/or reception needs (e.g., the number of WLAN-group WTs requesting WWAN services, the types of WWAN services required, individual and total throughput, required signal-quality threshold, and WWAN bandwidth available to the WLAN group), computational load, WLAN capacity, power-consumption load, diversity gain, and interference mitigation.

The WLAN distribution source code segments 1952 and 1962 may be adapted to route WWAN channel-access information to the WTs. For example, WWAN channel-access information can include multiple-access information (e.g., multiple-access codes, frequency bands, time slots, spatial (or sub-space) channels, etc.), power control

commands, timing and synchronization information, channel coding, modulation, channel pre-coding, and/or spread-spectrum coding.

All publications and patent applications mentioned in this specification are herein incorporated by reference to the same extent as if each individual publication or patent application was specifically and individually incorporated by reference.

Various embodiments of the invention may include variations in system configurations and the order of steps in which methods are provided. In many cases, multiple steps and/or multiple components may be consolidated.

The method and system embodiments described herein merely illustrate the principles of the invention. It should be appreciated that those skilled in the art will be able to devise various arrangements, which, although not explicitly described or shown herein, embody the principles of the invention and are included within its spirit and scope. Furthermore, all examples and conditional language recited herein are intended to be only for pedagogical purposes to aid the reader in understanding the principles of the invention. This disclosure and its associated references are to be construed as being without limitation to such specifically recited examples and conditions. Moreover, all statements herein reciting principles, aspects, and embodiments of the invention, as well as specific examples thereof, are intended to encompass both structural and functional equivalents thereof. Additionally, it is intended that such equivalents include both currently known equivalents as well as equivalents developed in the future, i.e., any elements developed that perform the same function, regardless of structure.

It should be appreciated by those skilled in the art that the block diagrams herein represent conceptual views of illustrative circuitry, algorithms, and functional steps embodying the principles of the invention. Similarly, it should be appreciated that any flow charts, flow diagrams, signal diagrams, system diagrams, codes, and the like represent various processes which may be substantially represented in computer-readable medium and so executed by a computer or processor, whether or not such computer or processor is explicitly shown.

The functions of the various elements shown in the drawings, including functional blocks labeled as "processors" or "systems," may be provided through the use of dedicated hardware as well as hardware capable of executing software in association with

appropriate software. When provided by a processor, the functions may be provided by a single dedicated processor, by a shared processor, or by a plurality of individual processors, some of which may be shared. Moreover, explicit use of the term "processor" or "controller" should not be construed to refer exclusively to hardware capable of executing software, and may implicitly include, without limitation, digital signal processor (DSP) hardware, read-only memory (ROM) for storing software, random access memory (RAM), and non-volatile storage. Other hardware, conventional and/or custom, may also be included. Similarly, the function of any component or device described herein may be carried out through the operation of program logic, through dedicated logic, through the interaction of program control and dedicated logic, or even manually, the particular technique being selectable by the implementer as more specifically understood from the context.

Any element expressed herein as a means for performing a specified function is intended to encompass any way of performing that function including, for example, a combination of circuit elements which performs that function or software in any form, including, therefore, firmware, micro-code or the like, combined with appropriate circuitry for executing that software to perform the function. The invention as defined herein resides in the fact that the functionalities provided by the various recited means are combined and brought together in the manner which the operational descriptions call for. Applicant regards any means which can provide those functionalities as equivalent as those shown herein.

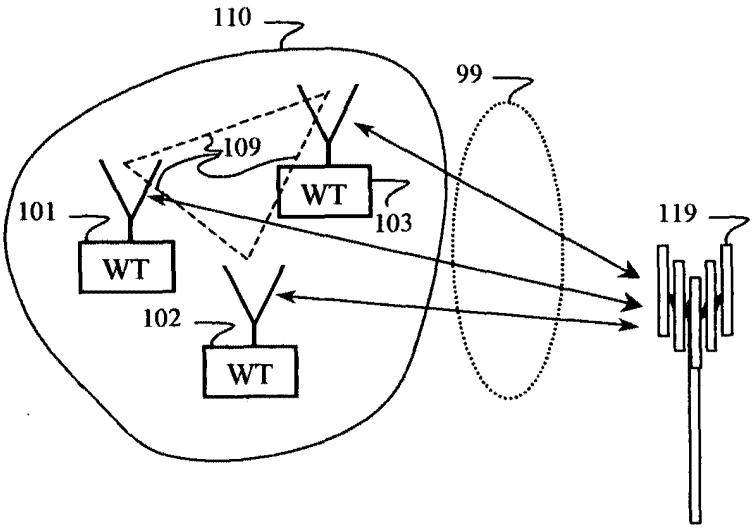
110
99
109
WT
103
101
WT
119
102
WT

FIG. 1A

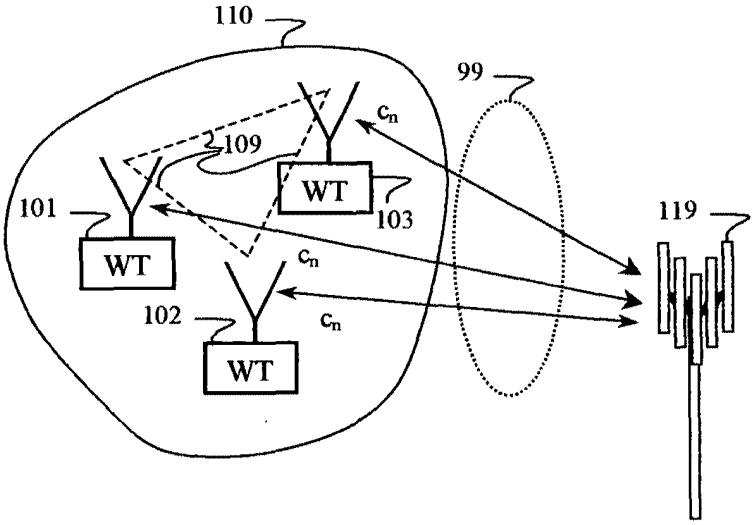
110
99
c_n
109
WT
103
101
WT
119
c_n
102
c_n
WT

FIG. 1B

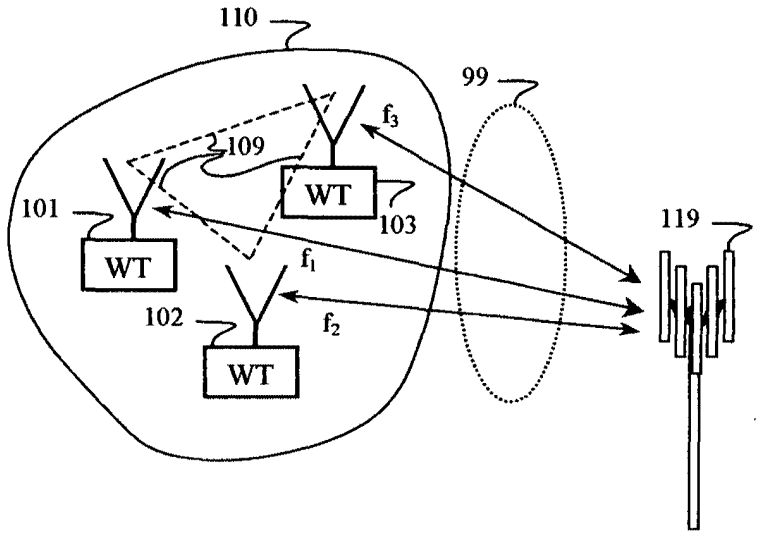
110
99
109
f_3
WT
103
101
WT
f_1
119
102
f_2
WT

FIG. 1C

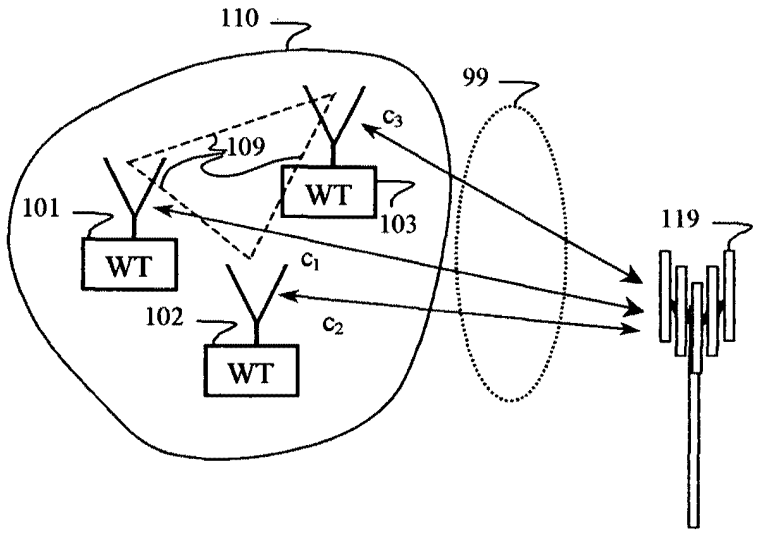
110
99
109
c_3
WT
103
101
WT
c_1
119
102
c_2
WT

FIG. 1D

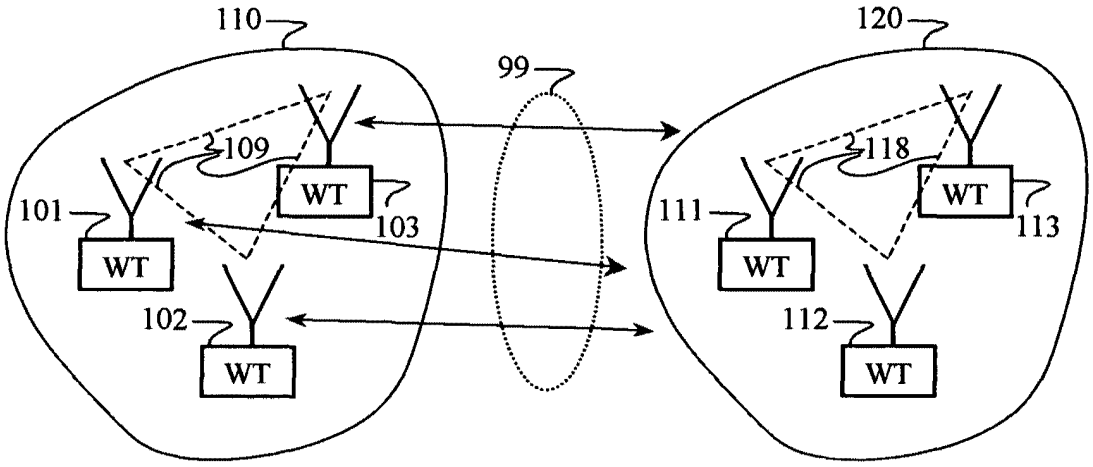
110
120
99
109
118
101
103
111
113
102
112
WT
WT
WT
WT
WT
WT

FIG. 1E

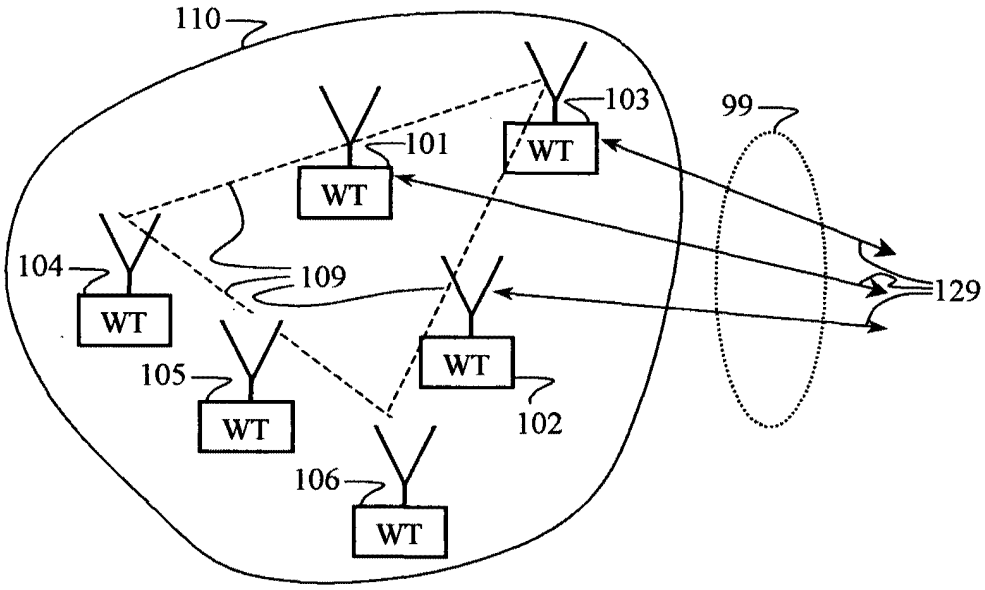
110
103
99
101
WT
WT
104
109
129
WT
WT
105
WT
102
106
WT

FIG. 1F

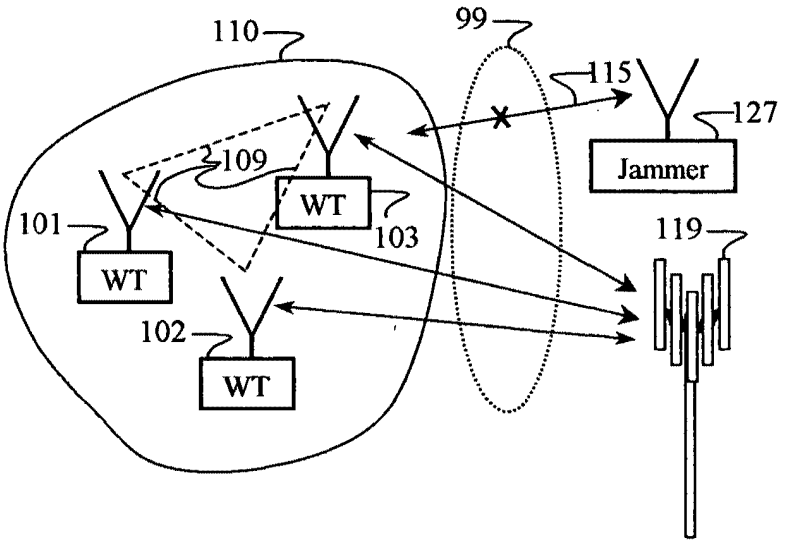
110
99
115
127
Jammer
109
WT
103
101
WT
119
102
WT

FIG. 1G

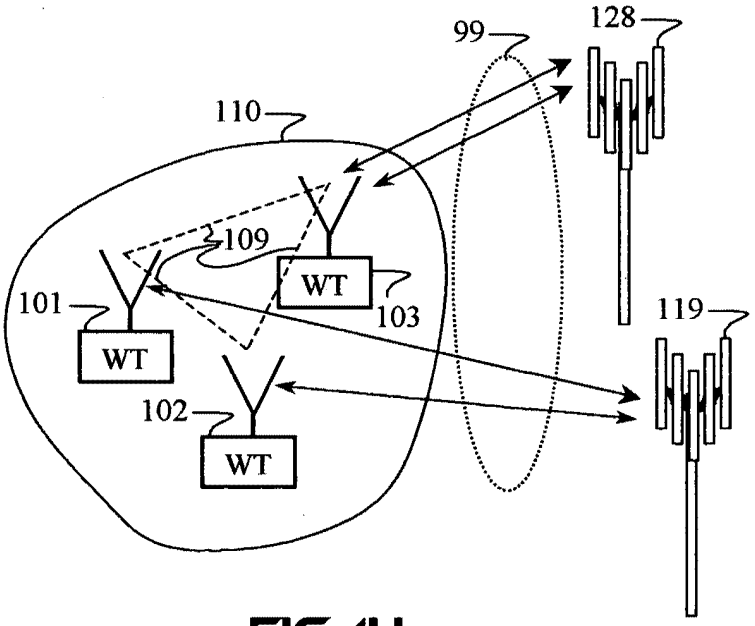
99
128
110
109
WT
103
101
WT
119
102
WT

FIG. 1H

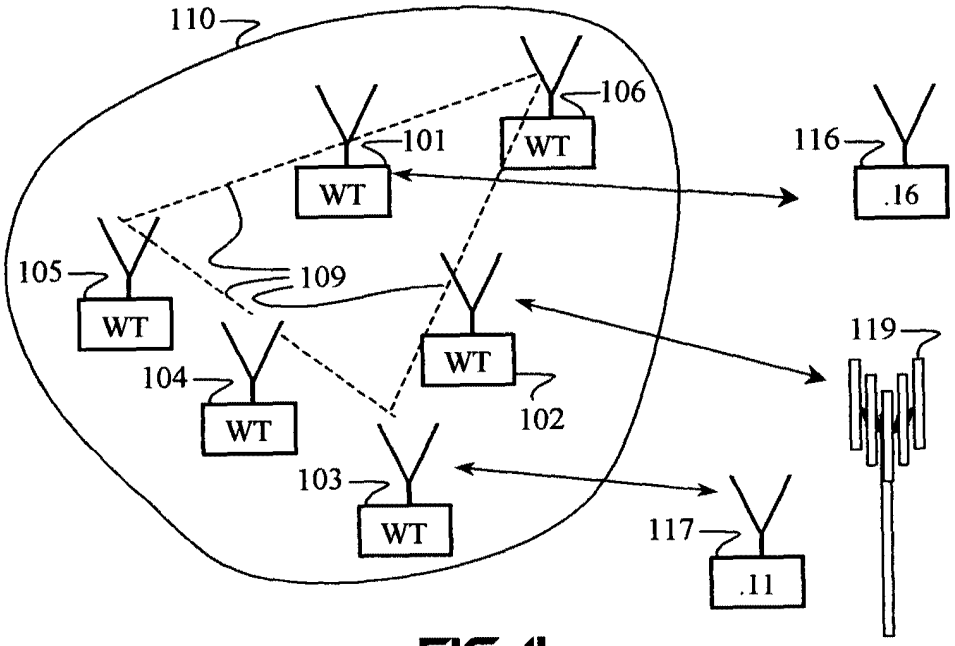
110
106
101
WT
WT
116
.16
105
109
WT
WT
119
104
WT
102
103
WT
117
.11

FIG. 1I

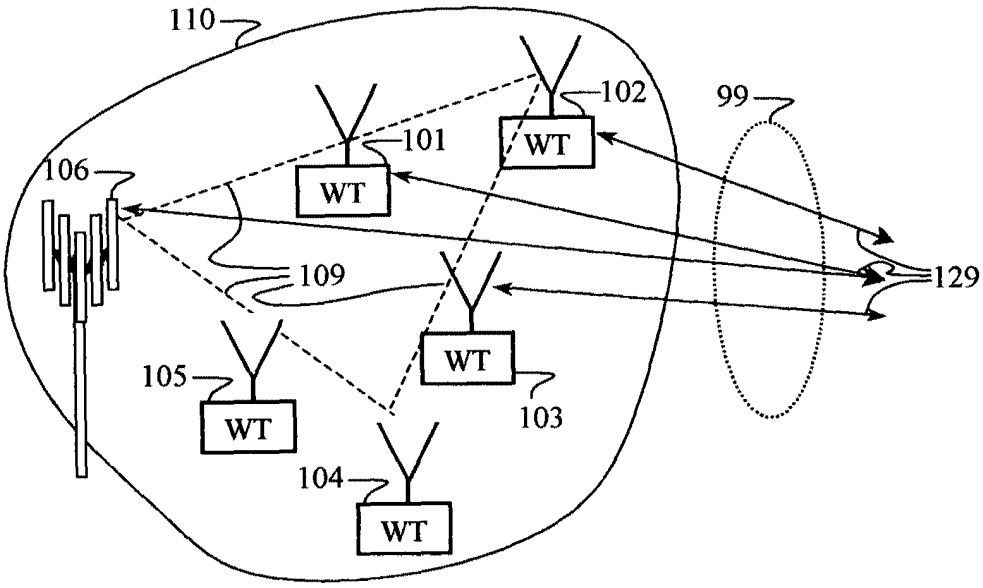
110
102
99
101
WT
WT
106
109
129
WT
105
WT
103
104
WT

FIG. 1J

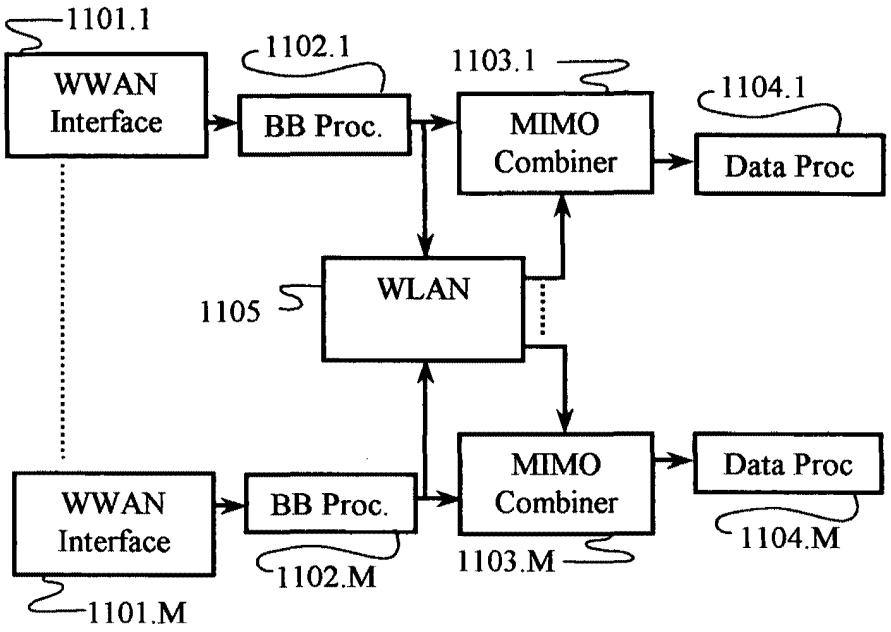
1101.1
WWAN Interface
1102.1
BB Proc.
1103.1
MIMO Combiner
1104.1
Data Proc
1105
WLAN
WWAN Interface
BB Proc.
MIMO Combiner
Data Proc
1104.M
1102.M
1103.M
1101.M

FIG. 2A

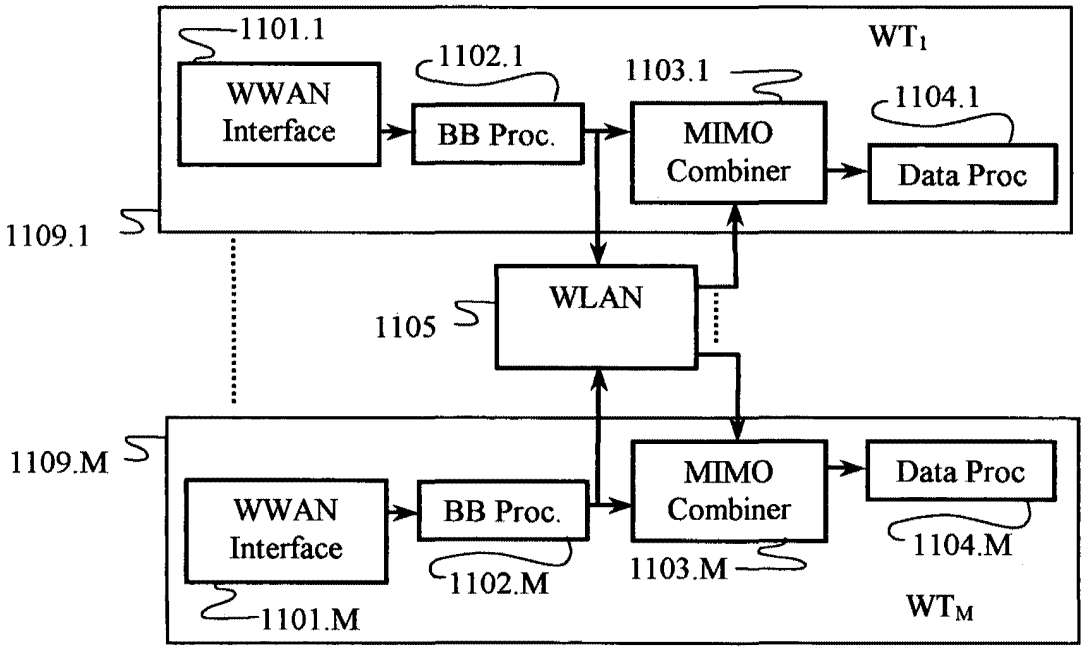
1101.1
WT1
1102.1
1103.1
1104.1
WWAN Interface
BB Proc.
MIMO Combiner
Data Proc
1109.1
1105
WLAN
1109.M
WWAN Interface
BB Proc.
MIMO Combiner
Data Proc
1104.M
1102.M
1103.M
1101.M
WTM

FIG. 2B

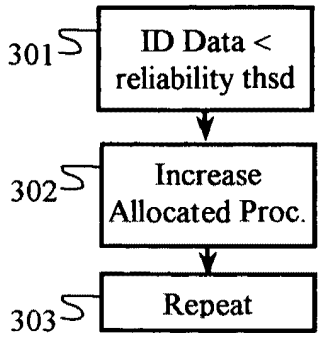

FIG. 3A

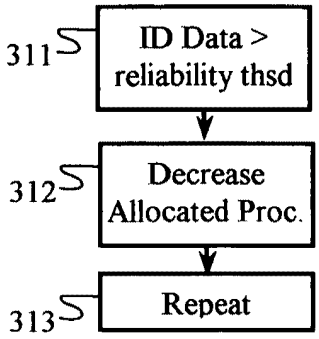

FIG. 3B

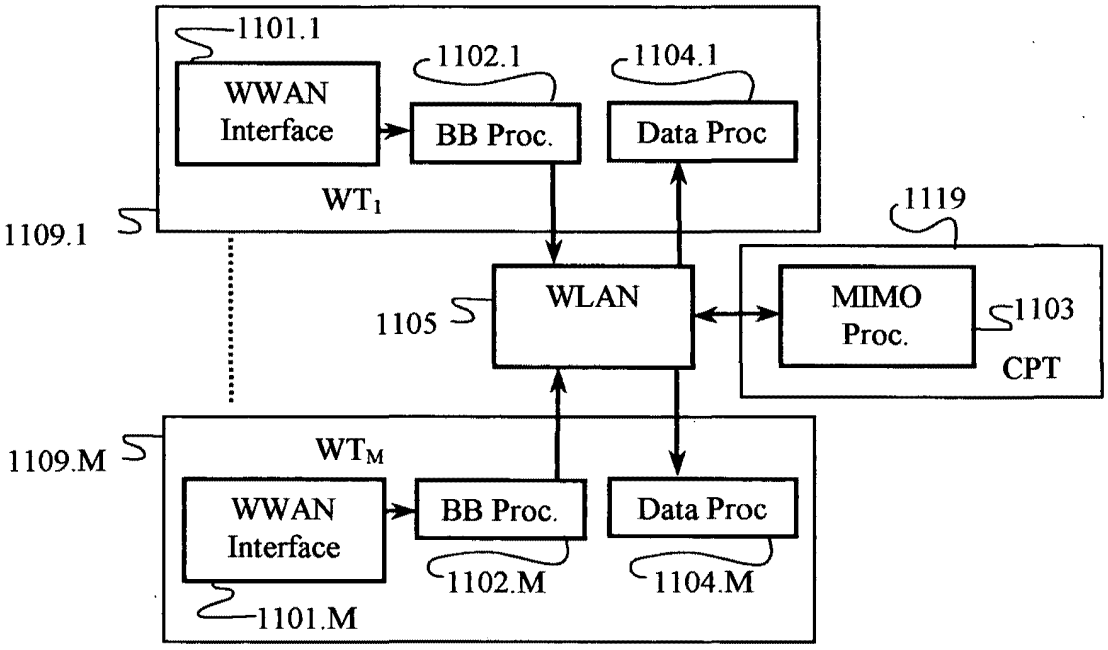

FIG. 4A

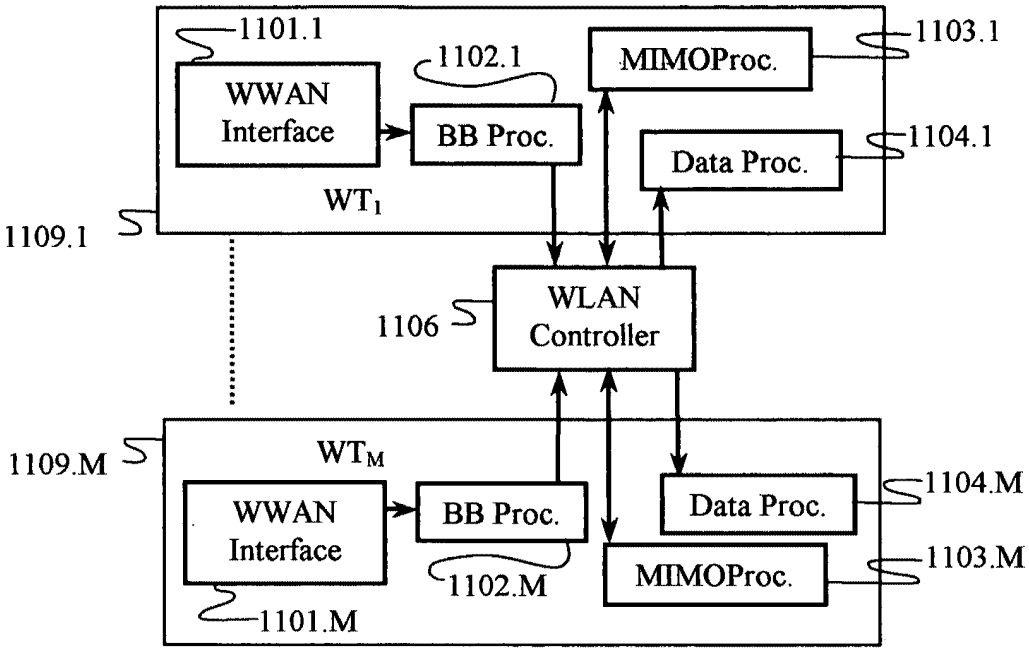

FIG. 4B

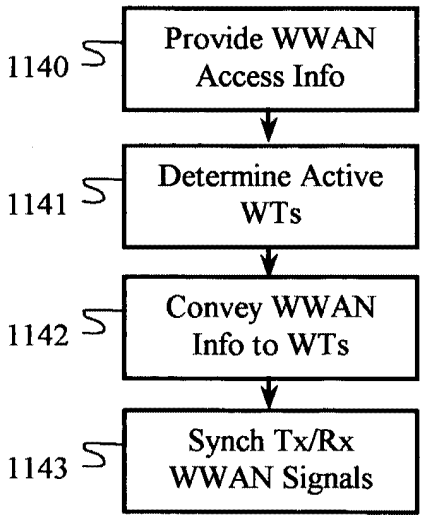

FIG. 4C

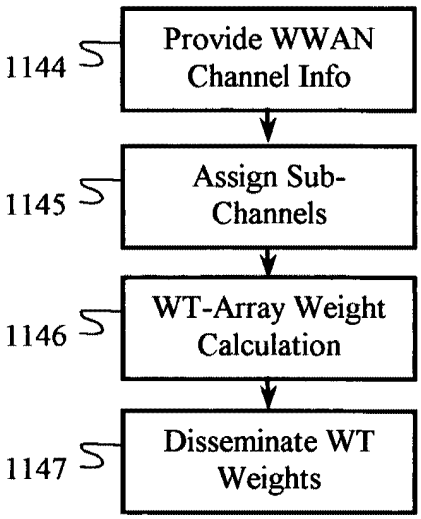

FIG. 4D

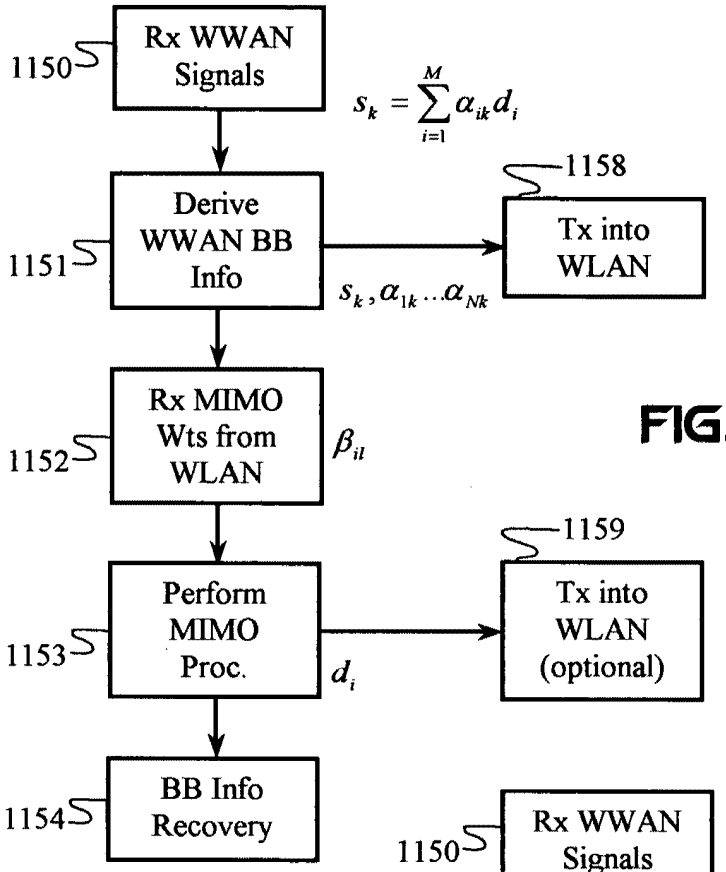
1150
Rx WWAN Signals
$s_k = \sum_{i=1}^{M} \alpha_{ik} d_i$
1158
1151
Derive WWAN BB Info
Tx into WLAN
$s_k, \alpha_{1k} \ldots \alpha_{Nk}$
1152
Rx MIMO Wts from WLAN
β_{il}
1159
1153
Perform MIMO Proc.
Tx into WLAN (optional)
d_i
1154
BB Info Recovery

FIG. 5A

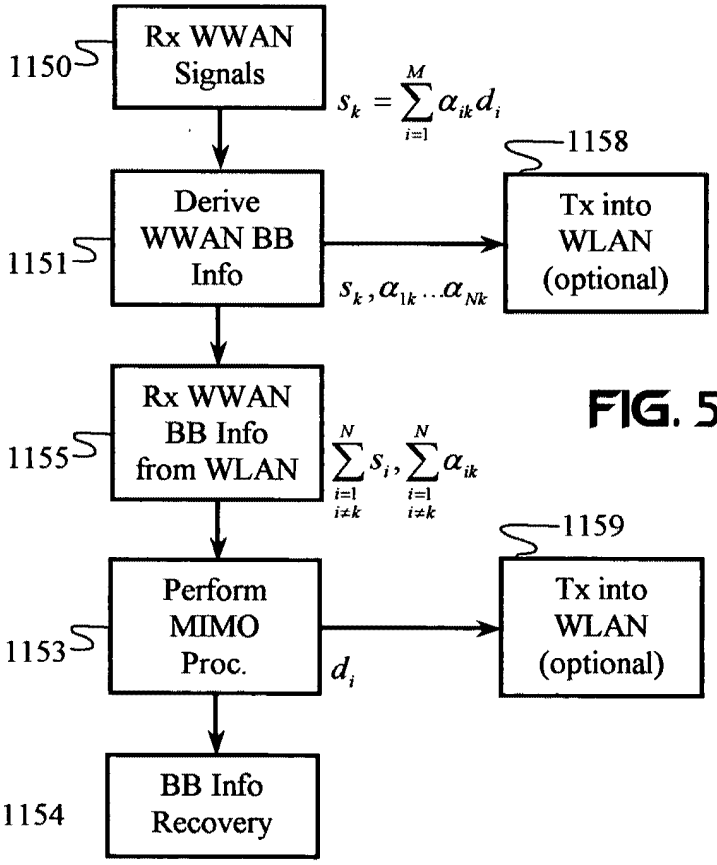
1150
Rx WWAN Signals
$s_k = \sum_{i=1}^{M} \alpha_{ik} d_i$
1158
1151
Derive WWAN BB Info
Tx into WLAN (optional)
$s_k, \alpha_{1k} \ldots \alpha_{Nk}$
1155
Rx WWAN BB Info from WLAN
$\sum_{\substack{i=1 \\ i \neq k}}^{N} s_i, \sum_{\substack{i=1 \\ i \neq k}}^{N} \alpha_{ik}$
1159
1153
Perform MIMO Proc.
Tx into WLAN (optional)
d_i
1154
BB Info Recovery

FIG. 5B

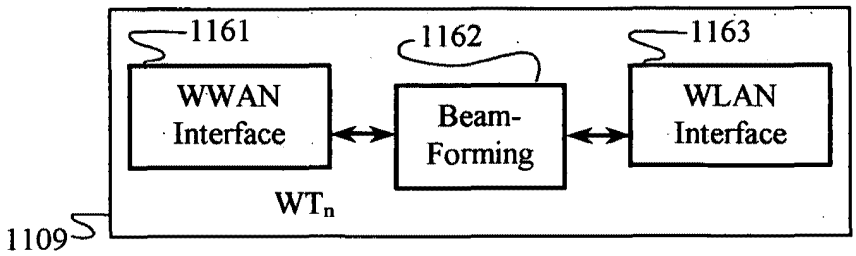
1161
1162
1163
WWAN Interface
Beam-Forming
WLAN Interface
WTn
1109

FIG. 6A

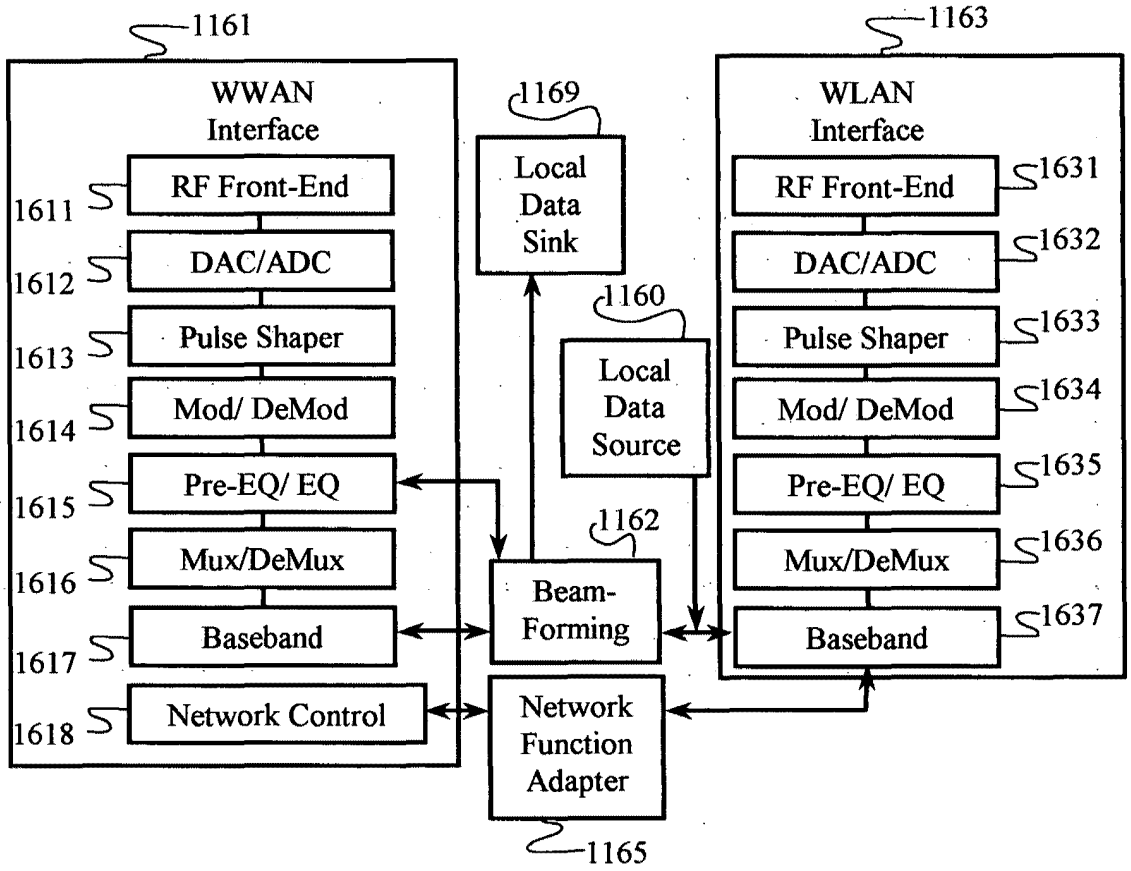
1161
WWAN Interface
1611 RF Front-End
1612 DAC/ADC
1613 Pulse Shaper
1614 Mod/ DeMod
1615 Pre-EQ/ EQ
1616 Mux/DeMux
1617 Baseband
1618 Network Control
1169
Local Data Sink
1160
Local Data Source
1162
Beam-Forming
Network Function Adapter
1165
1163
WLAN Interface
RF Front-End 1631
DAC/ADC 1632
Pulse Shaper 1633
Mod/ DeMod 1634
Pre-EQ/ EQ 1635
Mux/DeMux 1636
Baseband 1637

FIG. 6B

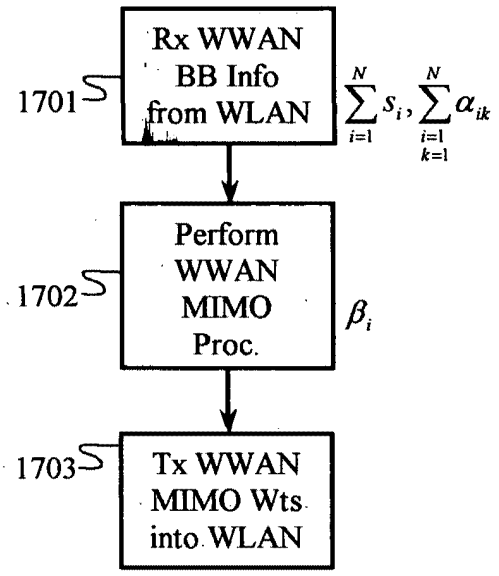
1701
Rx WWAN BB Info from WLAN
$\sum_{i=1}^{N} s_i, \sum_{\substack{i=1 \\ k=1}}^{N} \alpha_{ik}$
1702
Perform WWAN MIMO Proc.
β_i
1703
Tx WWAN MIMO Wts into WLAN

FIG. 7A

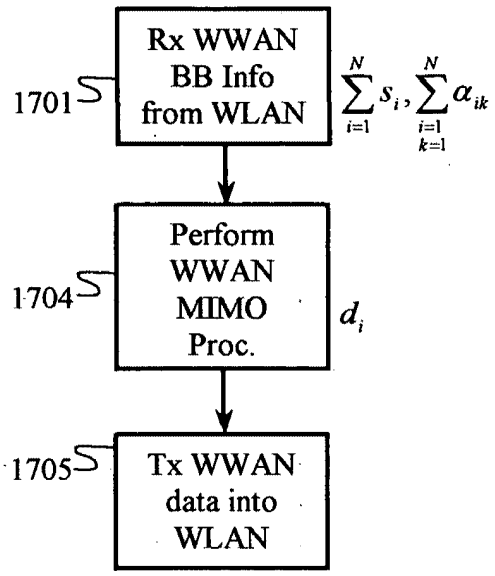
1701
Rx WWAN BB Info from WLAN
$\sum_{i=1}^{N} s_i, \sum_{\substack{i=1 \\ k=1}}^{N} \alpha_{ik}$
1704
Perform WWAN MIMO Proc.
d_i
1705
Tx WWAN data into WLAN

FIG. 7B

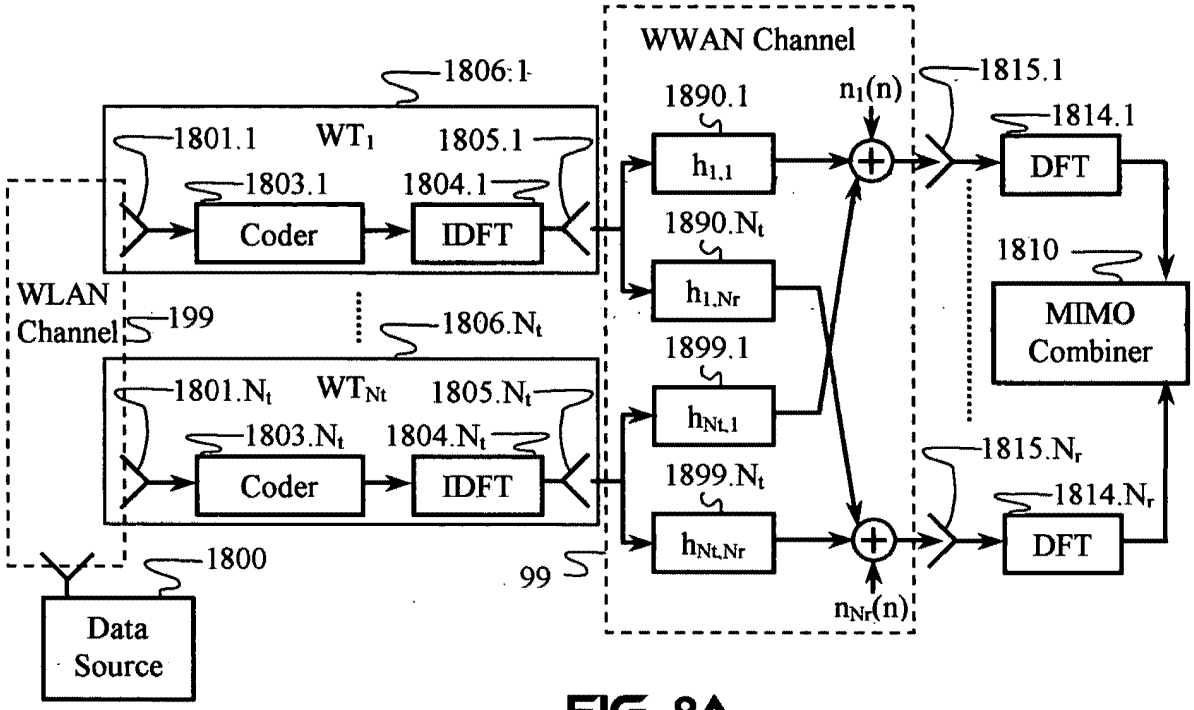
WWAN Channel
1806.1
1801.1
WT1
1805.1
1803.1
1804.1
Coder
IDFT
1890.1
h1,1
n1(n)
1815.1
1814.1
DFT
1890.Nt
h1,Nr
1810
MIMO Combiner
WLAN Channel
199
1806.Nt
1899.1
hNt,1
1801.Nt
WTNt
1805.Nt
1803.Nt
1804.Nt
Coder
IDFT
1815.Nr
1899.Nt
1814.Nr
hNt,Nr
DFT
1800
99
nNr(n)
Data Source

FIG. 8A

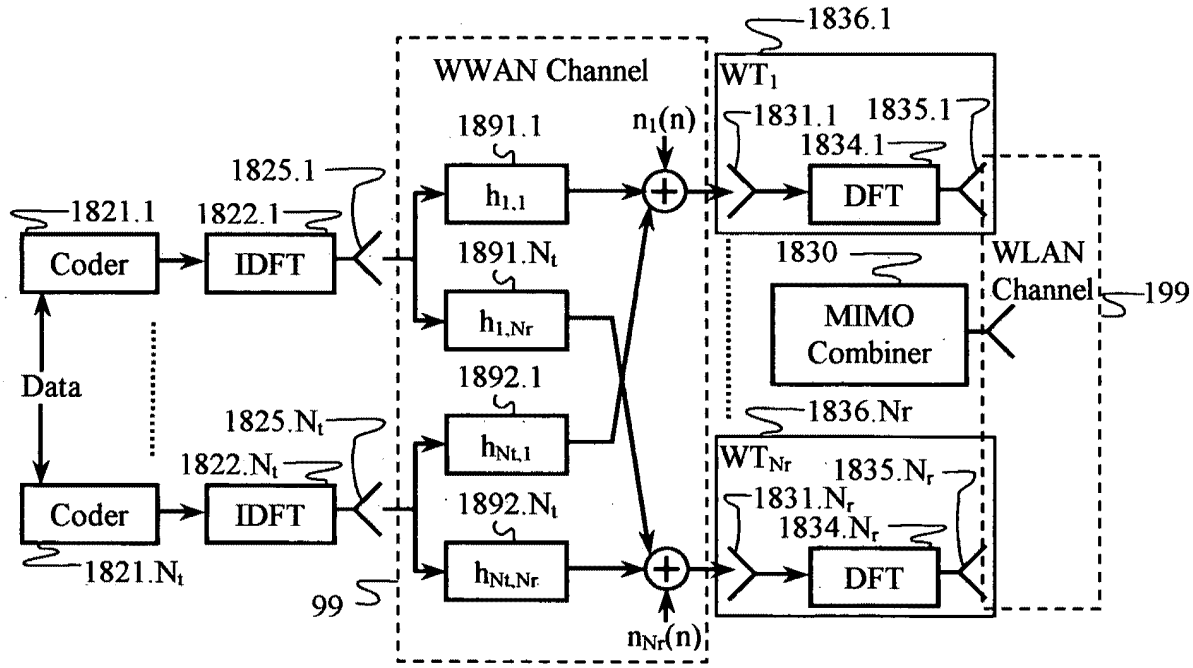
1836.1
WWAN Channel
WT1
1831.1
1835.1
1834.1
1891.1
n1(n)
1825.1
h1,1
DFT
1821.1
1822.1
Coder
IDFT
1891.Nt
1830
WLAN Channel
199
h1,Nr
MIMO Combiner
Data
1892.1
1836.Nr
1825.Nt
hNt,1
WTNr
1835.Nr
1822.Nt
1831.Nr
1834.Nr
Coder
IDFT
1892.Nt
DFT
1821.Nt
hNt,Nr
99
nNr(n)

FIG. 8B

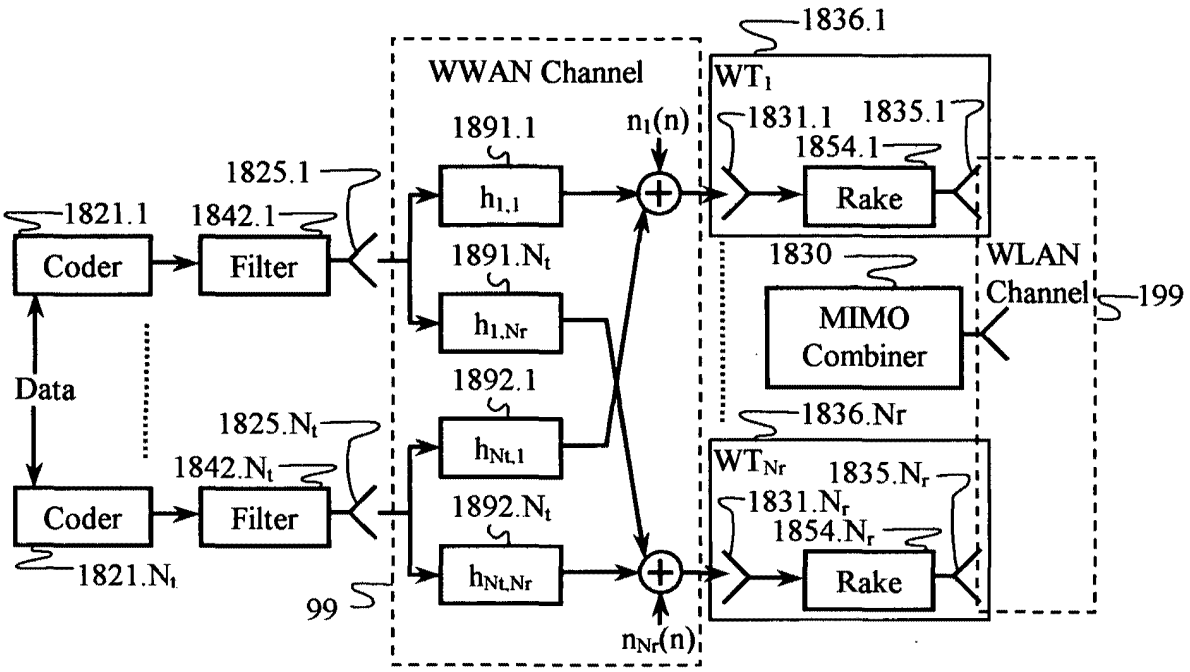
1836.1
WWAN Channel
WT1
1831.1
1835.1
1854.1
1891.1
n1(n)
1825.1
h1,1
Rake
1821.1
1842.1
Coder
Filter
1891.Nt
1830
WLAN
Channel
199
h1,Nr
MIMO
Combiner
Data
1892.1
1825.Nt
1836.Nr
hNt,1
WTNr
1835.Nr
1842.Nt
1831.Nr
1854.Nr
Coder
Filter
1892.Nt
Rake
1821.Nt
hNt,Nr
99
nNr(n)

FIG. 8C

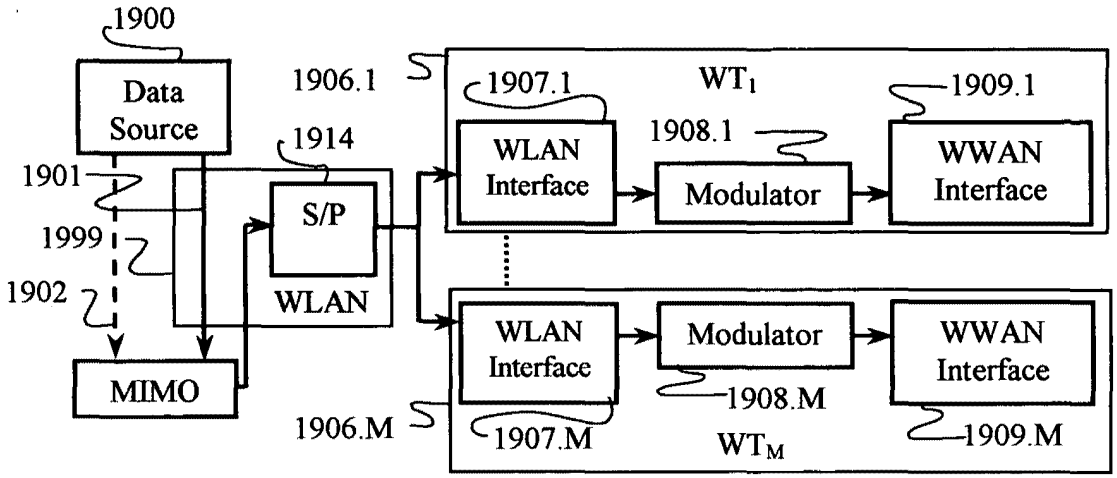
1900
Data Source
1901
1999
1902
MIMO
1914
S/P
WLAN
1906.1
1907.1
WLAN Interface
WT1
1908.1
Modulator
1909.1
WWAN Interface
WLAN Interface
Modulator
WWAN Interface
1906.M
1907.M
1908.M
WTM
1909.M

FIG. 9A

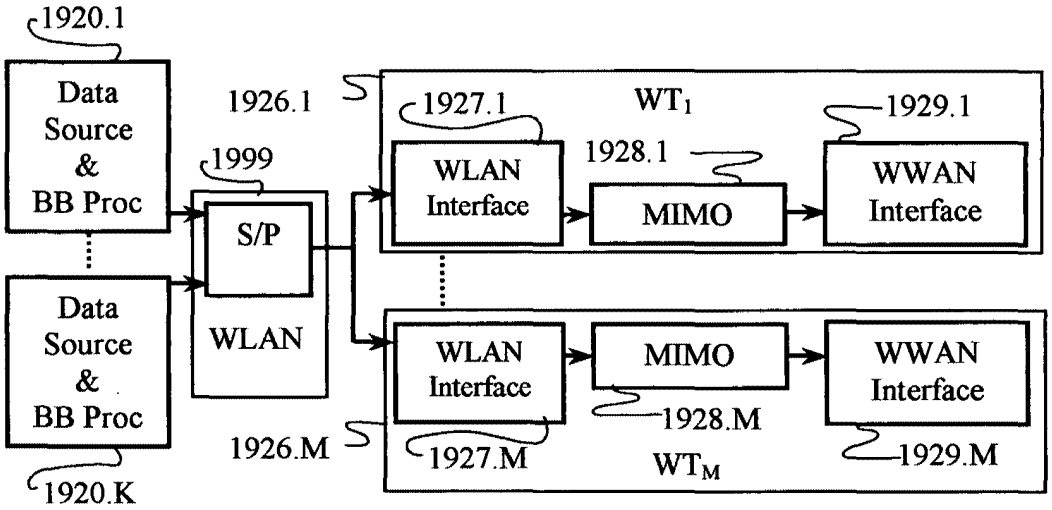
1920.1
Data Source & BB Proc
Data Source & BB Proc
1920.K
1999
S/P
WLAN
1926.1
1927.1
WLAN Interface
WT1
1928.1
MIMO
1929.1
WWAN Interface
WLAN Interface
MIMO
WWAN Interface
1926.M
1927.M
1928.M
WTM
1929.M

FIG. 9B

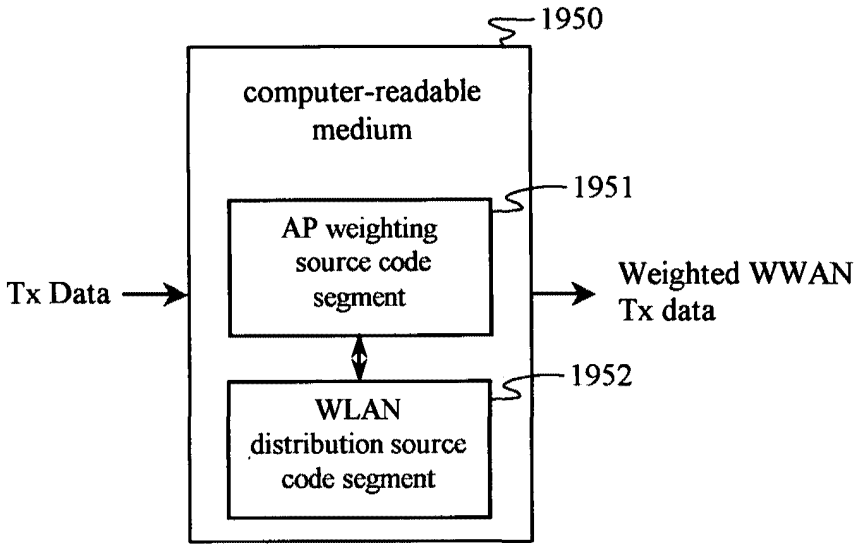

FIG. 10A

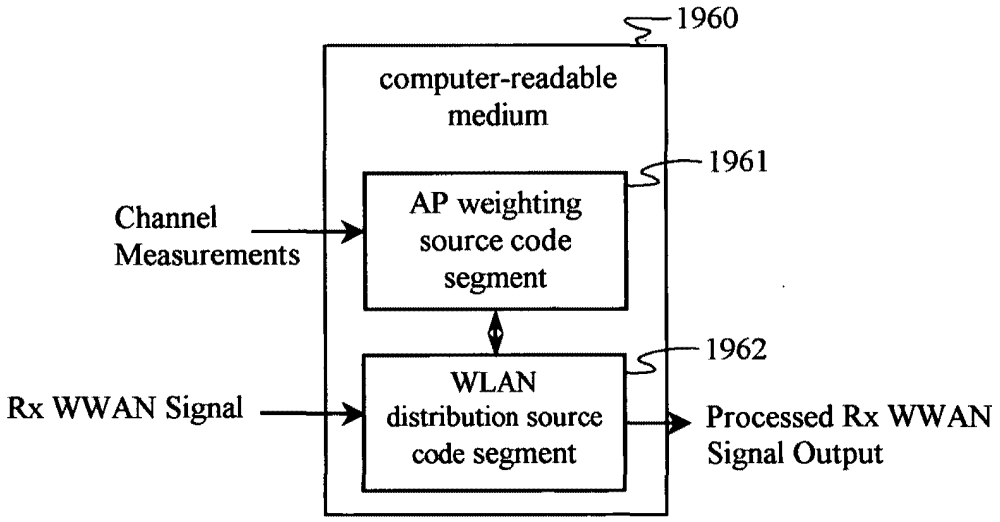

FIG. 10B

PATENT APPLICATION SERIAL NO. _____

U.S. DEPARTMENT OF COMMERCE
PATENT AND TRADEMARK OFFICE
FEE RECORD SHEET

08/05/2004 BABRAHA1 00000064 60598187

01 FC:2005 80.00 OP

PTO-1556
(5/87)

*U.S. Government Printing Office: 2002 — 489-267/59033