DECLARATION UNDER 37 CFR 1.131(a)

Application Serial Number: 17/105,576

Patent Number: 11,431,386

Filing Date: 11/26/2020

Inventor: Steve Shattil

Attorney Docket Number:

I, Steve Shattil, declare as follows:

1. I am the inventor of Patent No. 11,431,386 ('386).

2. This Declaration establishes constructive reduction to practice (and thus, invention) of the subject matter of each rejected claim prior to the effective date (under 35 U.S.C. 102(e)) of references on which the rejection is based.

3. I completed my invention as described and claimed in the subject patent 11,431,386 ('386) as evidenced by the following:

4. The subject matter of each of the rejected claims is disclosed in U.S. Pub. no. **20040086027 ('027), appl. No. 10/414,663, filed April 16, 2003**.

5. The features of claim 10 (with emphasis) and corresponding support in '027, by way of example, but without limitation, are shown as follows:

Claim 10: An apparatus for receiving an Orthogonal Frequency Division Multiplexing (OFDM) signal transmitted by a user device in a wireless network, the apparatus comprising:

6. Written support in '027 includes the following: (emphasis added)

Par. 0227:

> "The methods and systems of the present invention are applicable to multi-carrier signaling (such as **coded OFDM**, **spread OFDM**, and MC-CDMA) and single-carrier signaling (such as DSSS, DS-CDMA, and TDMA), which can be implemented with multi-carrier synthesis and analysis."

7. A person of ordinary skill in the art (POSITA) would recognize that "OFDM" is performed in a wireless network.

at least one processor; and
a non-transitory computer-readable memory communicatively coupled to the at least one processor, the non-transitory computer-readable memory including a set of instructions stored thereon and executable by the at least one processor for:

8. Written support in '027 includes the following: (emphasis added)

Par. 0197:

> "The **computer- readable medium 1299** may include any item of manufacture adapted to store or convey software and/or firmware. The source- code segments **1201** and **1202** may reside on a physical memory storage device, such as any magnetic, electrical, or optical device adapted to store data and/or computer command instructions. The **source-code segments 1201 and 1202 may be implemented as gate configurations on a programmable or integrated circuit**. Other means for arranging physical devices and/or electromagnetic phenomena may be employed to convey the function of the source-code segments **1201** and. **1202**. Accordingly, **the computer-readable medium 1299 may include any combination of FPGAs, ASICs, transient memory, and persistent memory**."

Par. 0239:

"Moreover, explicit use of the term "**processor**" or "controller" should not be construed to refer exclusively to hardware capable of executing software, and may implicitly include, without limitation, **digital signal processor** (DSP) hardware, read-only memory (ROM) for storing software, random access memory (RAM), and non-volatile storage. **Other hardware, conventional and/or custom**, may also be included. Similarly, the function of any component or device described herein may be carried out through the operation of program logic, through dedicated logic, through the interaction of program control and dedicated logic…"

9. The POSITA would find explicit instruction for using at least one processor with memory. The POSITA understands that the processor and memory might be digital signal processor hardware or other hardware, conventional and/or custom. The POSITA is taught by the disclosure that the computer-readable medium may include any combination of FPGAs, ASICs, transient memory, and persistent memory.

determining a plurality of subcarrier frequencies allocated to the user device;

10. Written support in '027 includes the following: (emphasis added)

Par. 0037:

"The **subcarriers may be selected for a particular user**, such as in an orthogonal frequency division multiple access system."

11. The POSITA would understand that a user is a user device and that subcarriers selected for the user are subcarrier frequencies allocated to the user device.

converting the OFDM signal to a plurality of frequency-domain values corresponding to the plurality of subcarrier frequencies; and

12. Written support in '027 includes the following: (emphasis added)

Par. 0044:

> "In another receiver embodiment of the invention, a received signal is separated into a plurality of orthogonal **sub-carrier components** by a **time-domain to frequency-domain converter**. The output of the converter is characterized by orthogonal poly-amplitude (and polyphase) coded data. The converter may be adapted to perform a Fourier transform, such as an **FFT or a DFT**."

Par. 0165:

> "FIG. 7C illustrates a method of receiving single-carrier or multi-carrier signals, including providing for receiver- system processing **751** of received signals, performing a **time-domain to frequency-domain conversion 753** of the received signals to produce a plurality of orthogonal **sub-carrier values**."

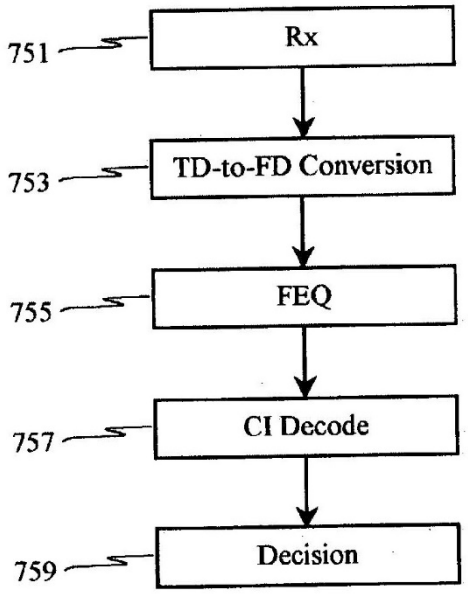

FIG. 7C

13. The POSITA understands that time-domain to frequency-domain conversion converts the received OFDM signal into sub-carrier values, which are in the frequency domain. The POSITA understands that the disclosed "Fourier transform, such as an FFT or a DFT" performs a time-domain to frequency-domain conversion.

decoding the plurality of frequency-domain values to recover a plurality of data symbols encoded by the user device on the plurality of subcarrier frequencies;

14. Written support in '027 includes the following: (emphasis added)

Par. 0044:

> "A combiner performs frequency-domain equalization and provides **CI decoding of the coded data**."

Par. 0138:

> "Therefore, receivers of the invention may provide for **decoding** (e.g., despreading) symbols modulated across multiple subspaces and/or **frequency bins**."

Par. 0165:

> "…providing for **CI decoding 757** (which includes combining)…"

15. The POSITA finds explicit instructions to decode the values recovered from the subcarrier frequencies.

wherein decoding employs a plurality of codes that are inverse to, complex-conjugate of, or complementary to a set of complex-valued codes that the user device employs to shape the OFDM signal into a superposition of cyclic-shifted pulse waveforms that each has one of the plurality of data symbols modulated thereon.

16. Written support in '027 includes the following: (emphasis added)

Par. 0156:

> "…**decoding** of the orthogonal poly-amplitude codes is performed in a combiner **605**. The combiner **605** multiplies the frequency bin values output by the converter **603** with a **complex conjugate** of at least one of poly-amplitude code."

Par. 0127:

"The IFFT module **404** performs a frequency-domain to time-domain conversion of input sub-carrier weights to produce a pulse waveform. The **CI coder 402 provides sub-carrier weights to the IFFT module 404 to shape the pulse waveform**, as well as provide sub-carrier selection (i.e., allocation)."

Par. 0103:

"Since the pulse waveforms **311**, **312**, **313**, and **314** have the same starting and ending times, the waveform shapes **311**, **312**, **313**, and **314** are different from each other. For example, waveform **311** has all of its sidelobes to the right of its main lobe, whereas all of the sidelobes of waveform **314** occur to the left of the main lobe. This tends to increase the interference in systems that perform time-domain equalization and Rake reception. In particular, inter-pulse interference is not limited to nearby pulses because the side-lobe structure is periodic, or **cyclic**, over the symbol duration T_s. For example, the side-lobe amplitude (and thus, interference) of waveform **311** diminishes across pulse **312** and increases across pulse **314**."

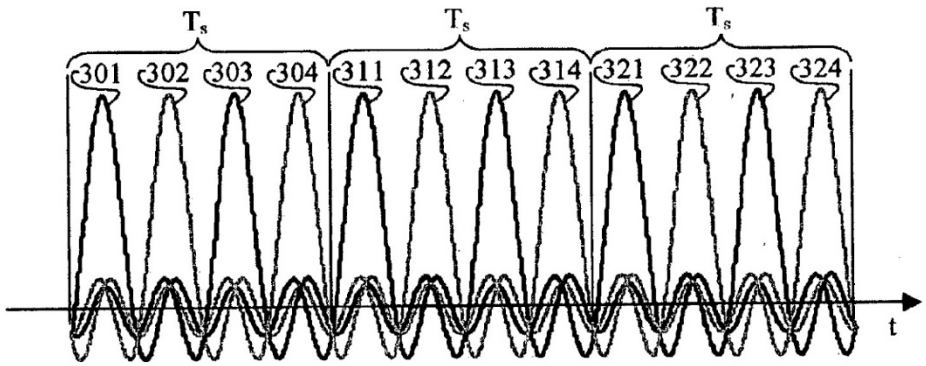

FIG. 3A

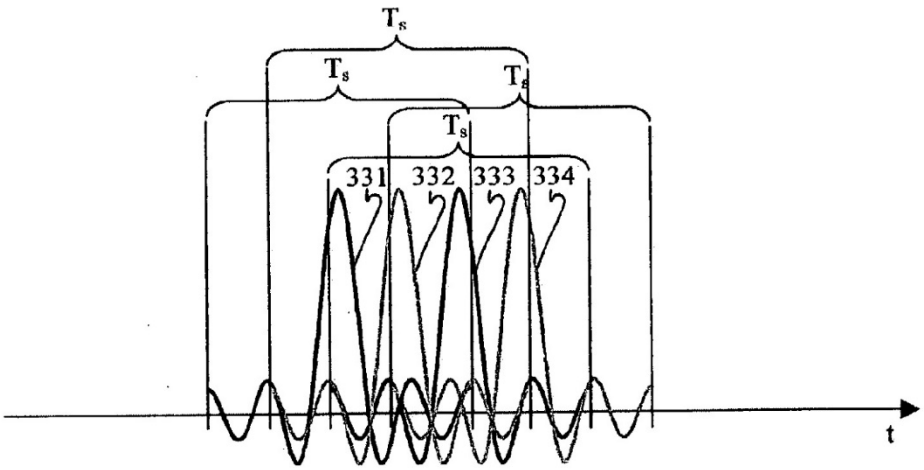

FIG. 3B

17. The POSITA is taught that the decoding employs the complex conjugates of the CI codes used to encode the signal, the decoding being an inverse, or complementary, function of the CI coding. The POSITA understands that the CI codes shape the superposition signal. The POSITA is taught that the CI waveforms in FIG. 3A are cyclic-shifted waveforms, which distinguish over the pulse-shape waveforms depicted in FIG. 3B.

Claim 15. The apparatus of claim 10, wherein converting the OFDM signal to a plurality of frequency-domain values uses a discrete Fourier transform.

18. Written support in '027 includes the following: (emphasis added)

Par. 0044:

> "In another receiver embodiment of the invention, a received signal is separated into a plurality of orthogonal **sub-carrier components** by a **time-domain to frequency-domain converter**. The output of the converter is characterized by orthogonal poly-amplitude (and polyphase) coded data. The converter may be adapted to perform a Fourier transform, such as an **FFT or a DFT**."

19. The disclosure informs the POSITA that the time-domain to frequency-domain converter may use a discrete Fourier transform.

Claim 18. The apparatus of claim 10, wherein an mth one of the plurality of codes is expressed as a set of N code chips for a set of integers n=, {0, . . . , N−1}, wherein each code chip is expressed by $e^{i2\pi nm/N}$, wherein i is the square root of −1, and π is Pi.

20. Written support in '027 includes the following: (emphasis added)

Par. 0145:

"A CI code matrix of dimension N×N containing polyphase code chips is multiplied by a set of data vectors or a data matrix. In particular, each column of the CI code matrix (such as column **551**) is multiplied by a corresponding data symbol (such as symbol d_2)… Since rows and columns of the basic CI code matrix resemble the vectors of complex values used in **DFTs**, the sub-carrier weights w_1 to w_N can be calculated using a fast transform algorithm."

21. The POSITA understands that columns of the basic CI code matrix at least resemble vectors from a DFT, so the POSITA understands that CI code chips are expressed by $\mathbf{e}^{i2\pi nm/N}$, which are elements in the DFT matrix.

DECLARATION

The declarant acknowledges that willful false statements and the like are punishable by fine or imprisonment, or both (18 U.S.C. 1001) and may jeopardize the validity of the application or any patent issuing thereon. The declarant attests that all statements made of the declarant's own knowledge are true and that all statements made on information and belief are believed to be true.

Steve Shattil

___May 27, 2025____
Date