US 20100302432A1

(19) United States

(12) Patent Application Publication

Komuro

(10) Pub. No.: US 2010/0302432 A1

(43) Pub. Date: Dec. 2, 2010

(54) **FOCUS DETECTION APPARATUS, IMAGE PICKUP DEVICE, AND ELECTRONIC CAMERA**

(75) Inventor: **Yoshiaki Komuro**, Kanagawa (JP)

Correspondence Address:
SNR DENTON US LLP
P.O. BOX 061080, WACKER DRIVE STATION, WILLIS TOWER
CHICAGO, IL 60606-1080 (US)

(73) Assignee: **SONY CORPORATION**, Tokyo (JP)

(21) Appl. No.: **12/773,269**

(22) Filed: **May 4, 2010**

(30) **Foreign Application Priority Data**

May 26, 2009 (JP) 2009-126818

Publication Classification

(51) **Int. Cl.**
H04N 5/232 (2006.01)
H04N 5/225 (2006.01)

(52) **U.S. Cl.** **348/340**; 348/345; 348/E05.045; 348/E05.024

(57) **ABSTRACT**

A focus detection apparatus includes first-type and second-type pixels and an image-formation-state detector. Each first-type pixel includes a photoelectric converter that receives light from an image-pickup optical system and first and second optical members arranged on an optical path from the optical system to the photoelectric converter and having different refractive indices, and outputs a first charge signal corresponding to an amount of light received by the photoelectric converter. Each second-type pixel includes the photoelectric converter and the first and second optical members arranged such that a positional relationship relative to the photoelectric converter differs from that in each first-type pixel, and outputs a second charge signal corresponding to an amount of light received by the photoelectric converter. The detector detects an image formation state of the image-pickup optical system on the basis of the first and second charge signals.

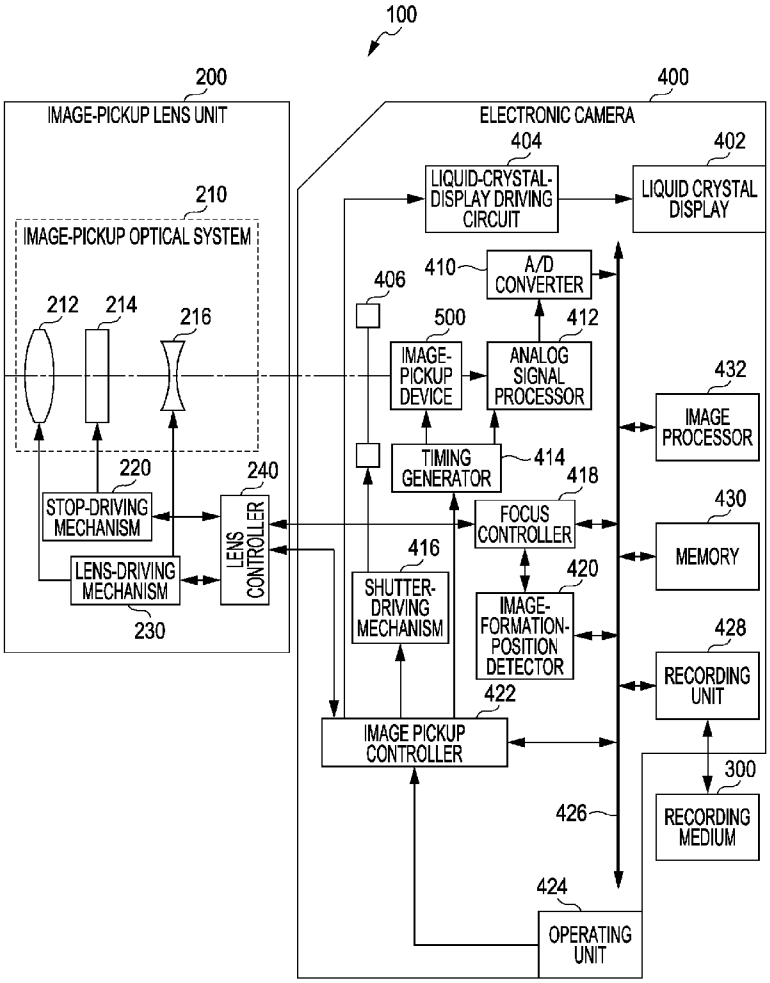

FIG. 1

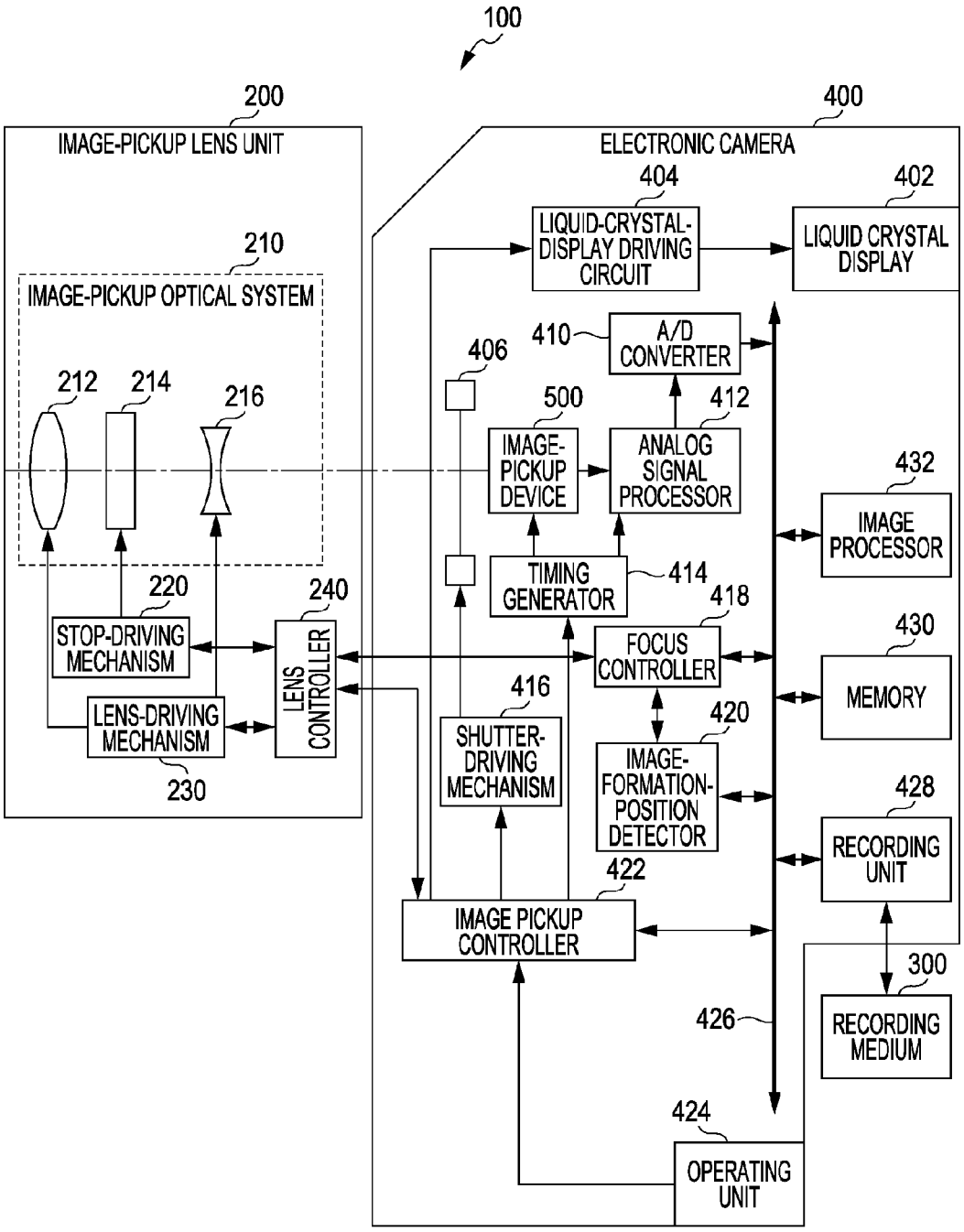
100
200
IMAGE-PICKUP LENS UNIT
210
IMAGE-PICKUP OPTICAL SYSTEM
212
214
216
220
STOP-DRIVING MECHANISM
240
LENS CONTROLLER
LENS-DRIVING MECHANISM
230
400
ELECTRONIC CAMERA
404
LIQUID-CRYSTAL-DISPLAY DRIVING CIRCUIT
402
LIQUID CRYSTAL DISPLAY
410
A/D CONVERTER
406
500
IMAGE-PICKUP DEVICE
412
ANALOG SIGNAL PROCESSOR
432
IMAGE PROCESSOR
TIMING GENERATOR
414
418
FOCUS CONTROLLER
430
MEMORY
416
SHUTTER-DRIVING MECHANISM
420
IMAGE-FORMATION-POSITION DETECTOR
428
RECORDING UNIT
422
IMAGE PICKUP CONTROLLER
300
RECORDING MEDIUM
426
424
OPERATING UNIT

FIG. 2

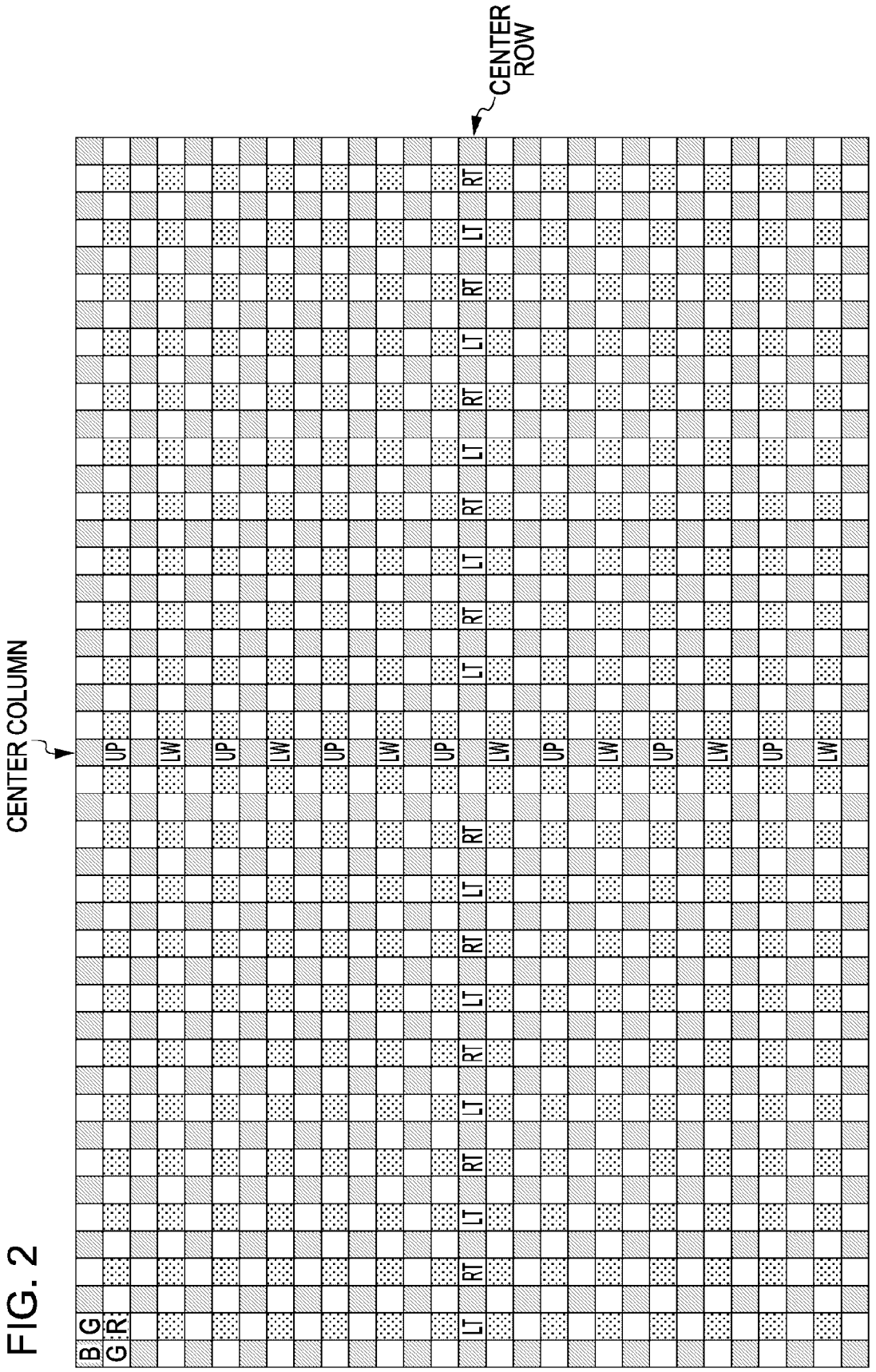

FIG. 3

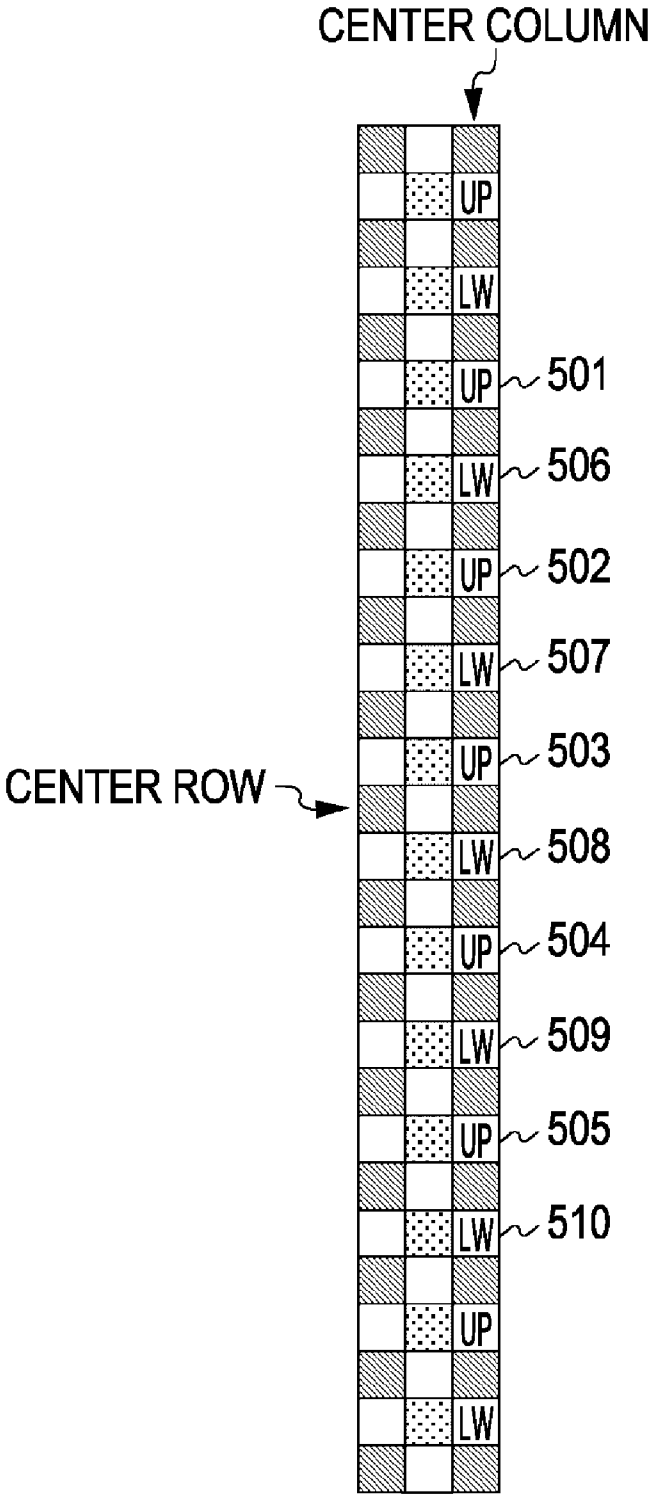
CENTER COLUMN
UP
LW
UP
501
LW
506
UP
502
LW
507
UP
503
CENTER ROW
LW
508
UP
504
LW
509
UP
505
LW
510
UP
LW

FIG. 4A

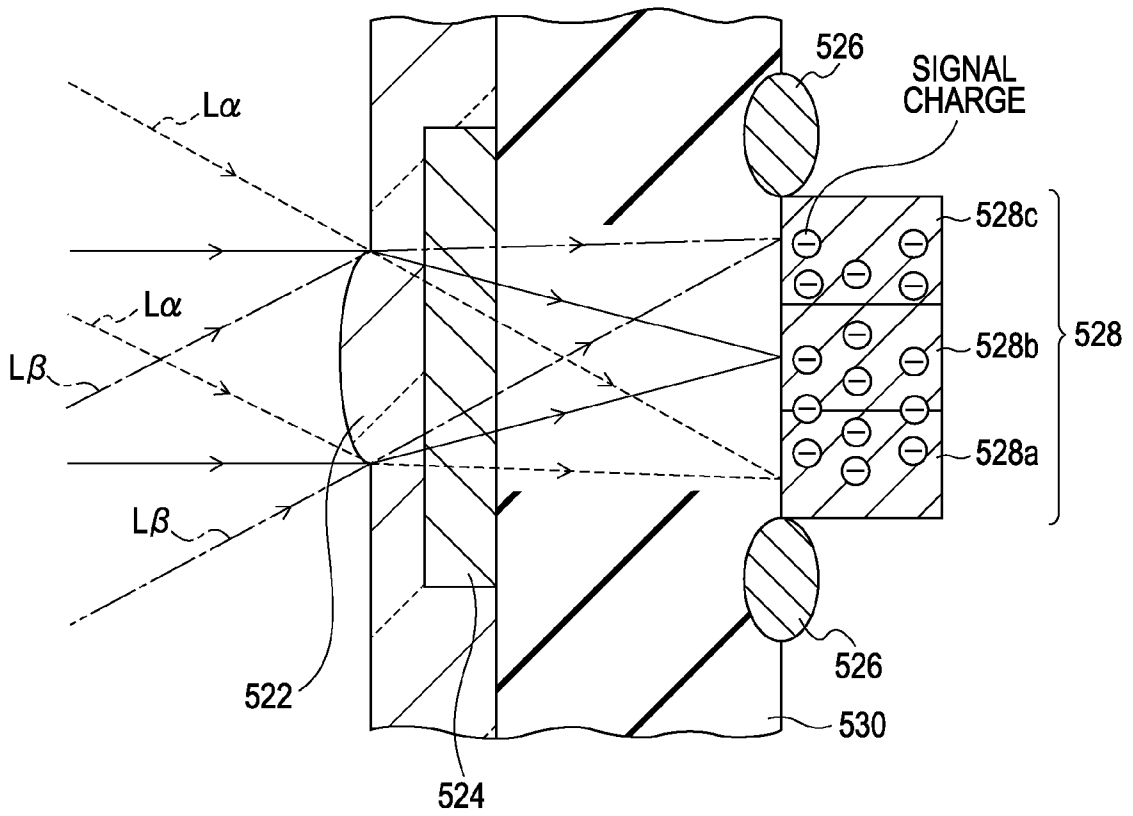
526
SIGNAL CHARGE
Lα
528c
Lα
Lβ
528b
528
528a
Lβ
526
522
530
524

FIG. 4B

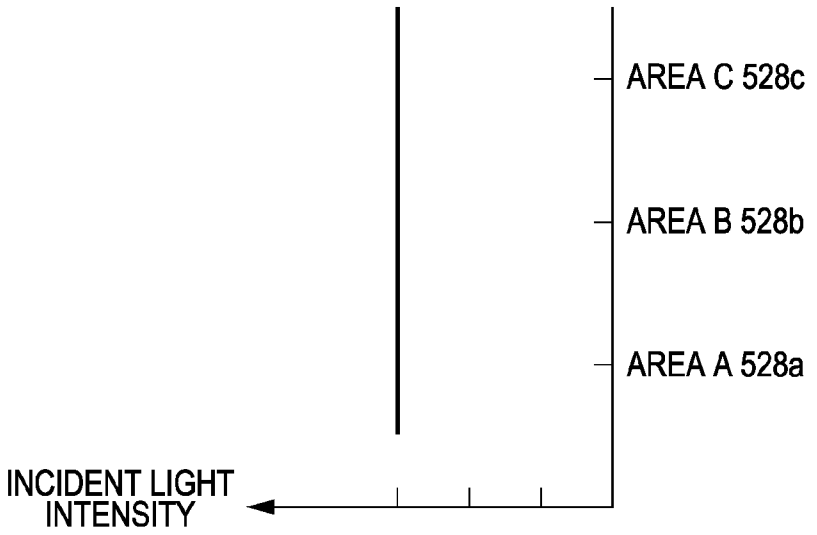
AREA C 528c
AREA B 528b
AREA A 528a
INCIDENT LIGHT INTENSITY

FIG. 5A

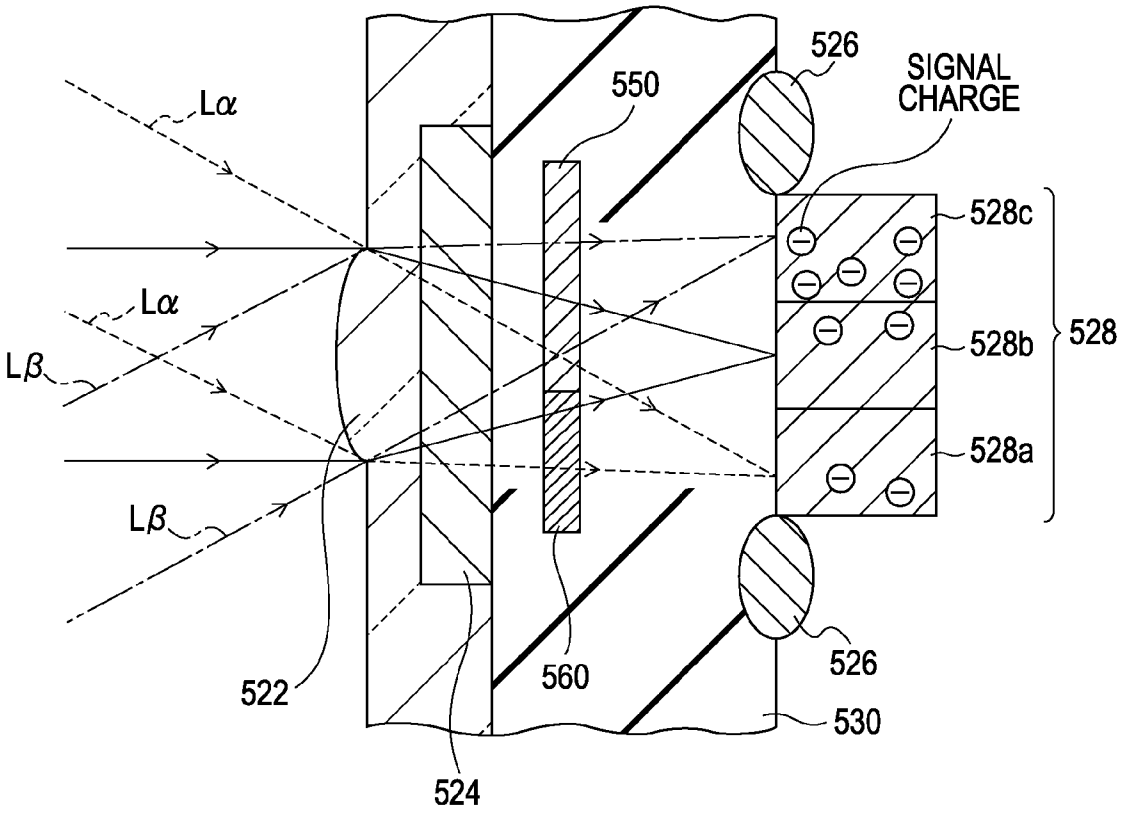
Lα
Lα
Lβ
Lβ
550
526
SIGNAL CHARGE
528c
528b
528a
528
522
560
526
530
524

FIG. 5B

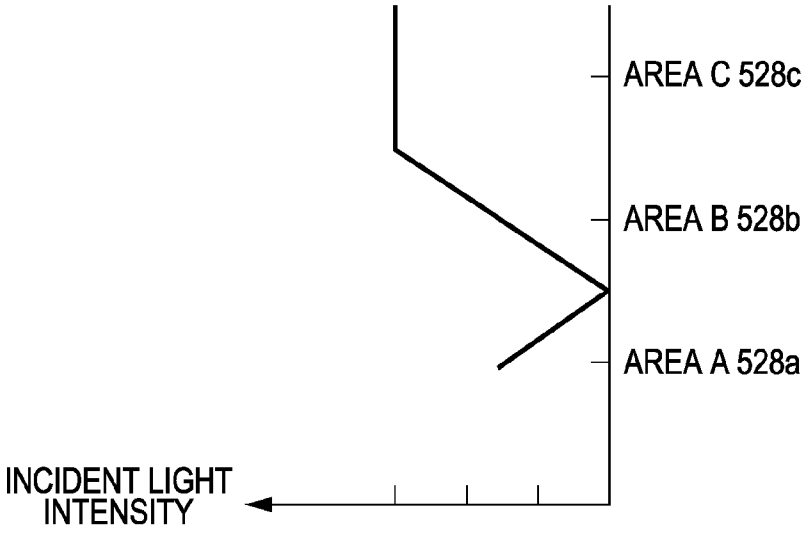
AREA C 528c
AREA B 528b
AREA A 528a
INCIDENT LIGHT INTENSITY

FIG. 6

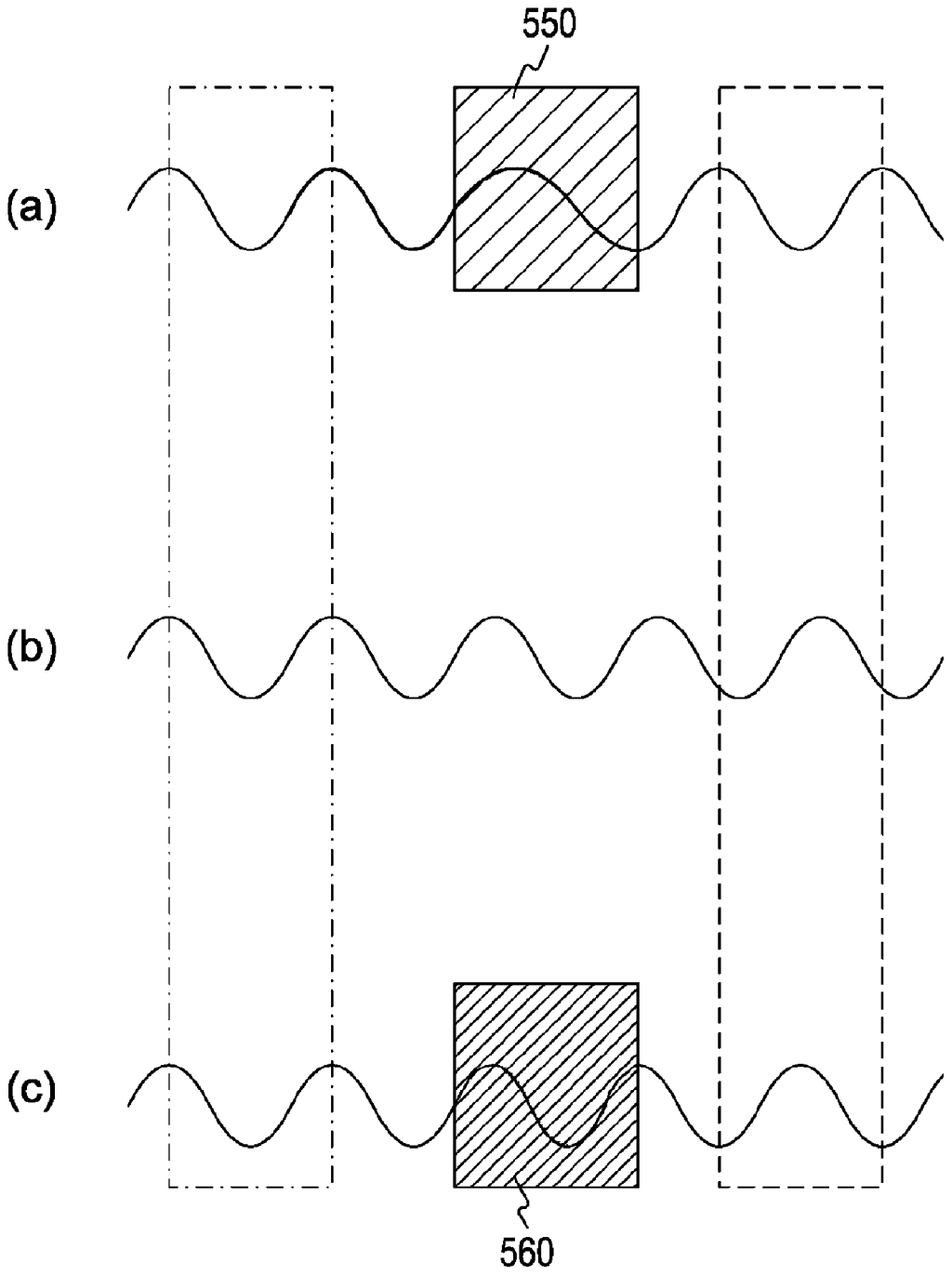

FIG. 7A

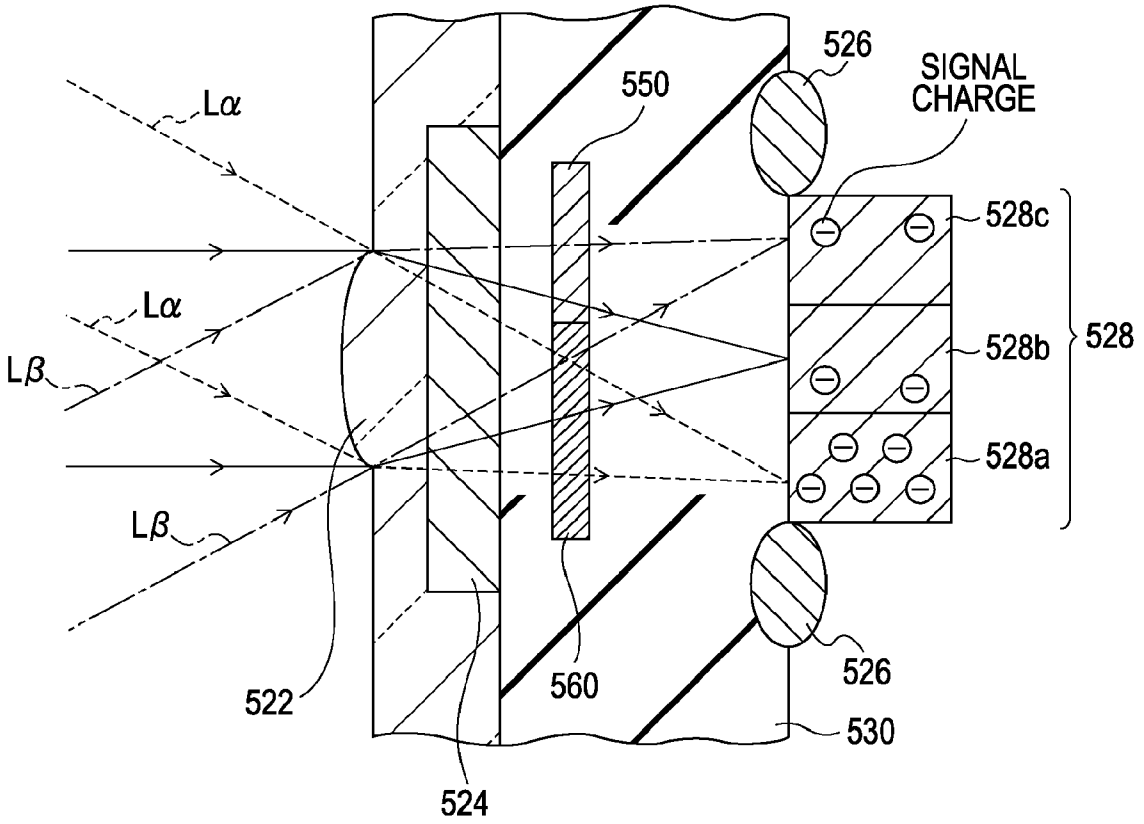
Lα
Lα
Lβ
Lβ
550
526
SIGNAL CHARGE
528c
528b
528a
528
522
560
526
530
524

FIG. 7B

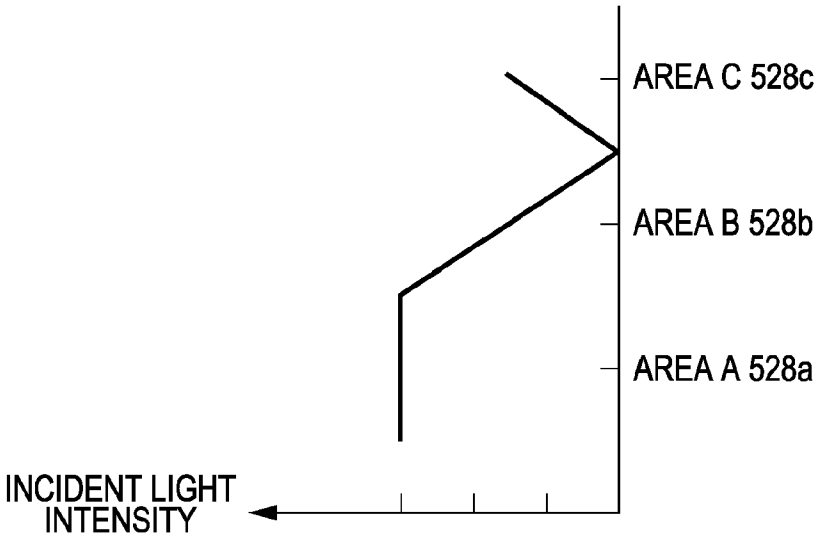
AREA C 528c
AREA B 528b
AREA A 528a
INCIDENT LIGHT INTENSITY

FIG. 8A

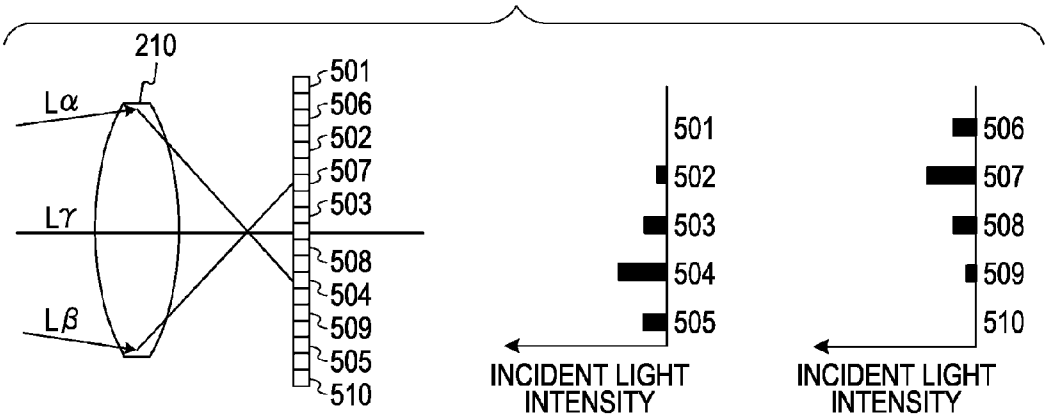

FIG. 8B

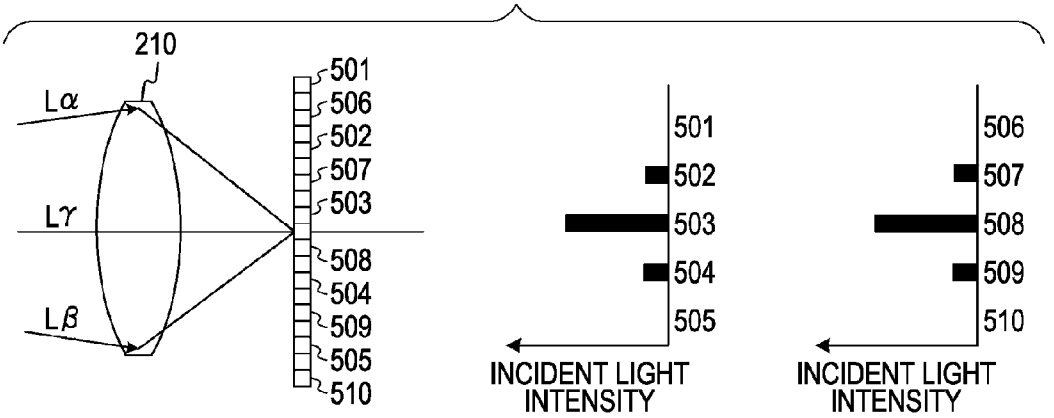

FIG. 8C

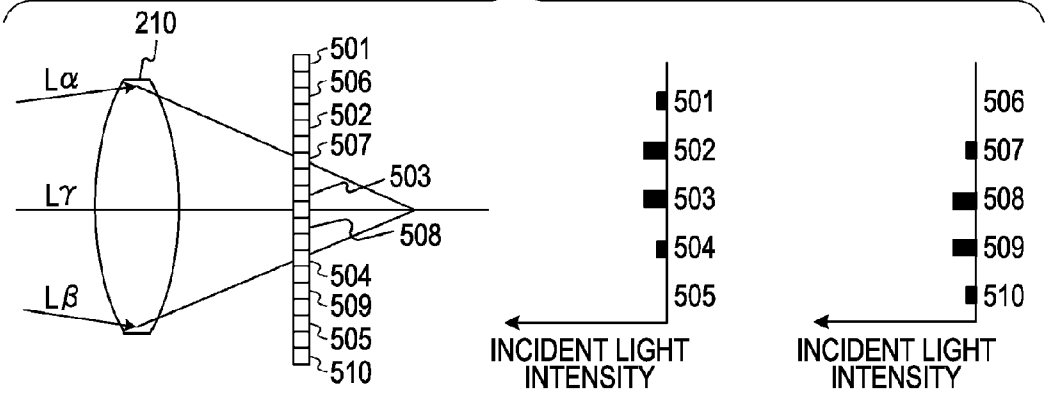

FIG. 9

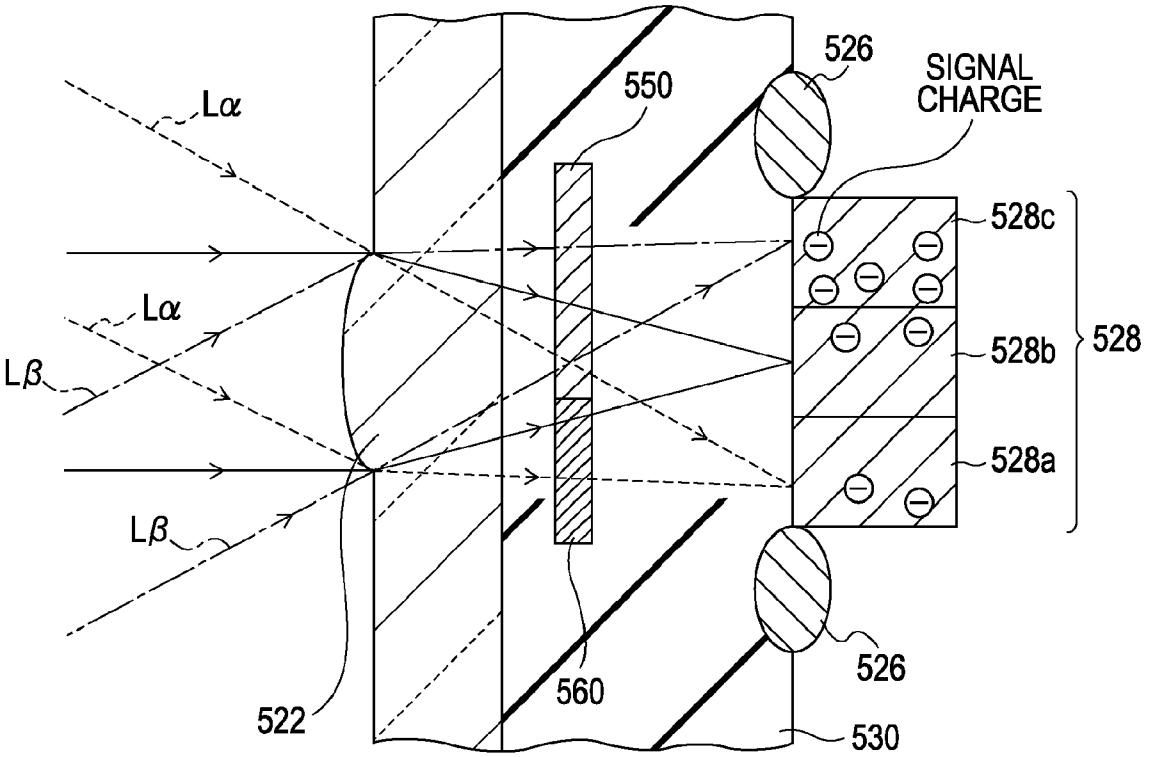
Lα
Lα
Lβ
Lβ
550
526
SIGNAL
CHARGE
528c
528b
528a
528
522
560
526
530

FIG. 10A

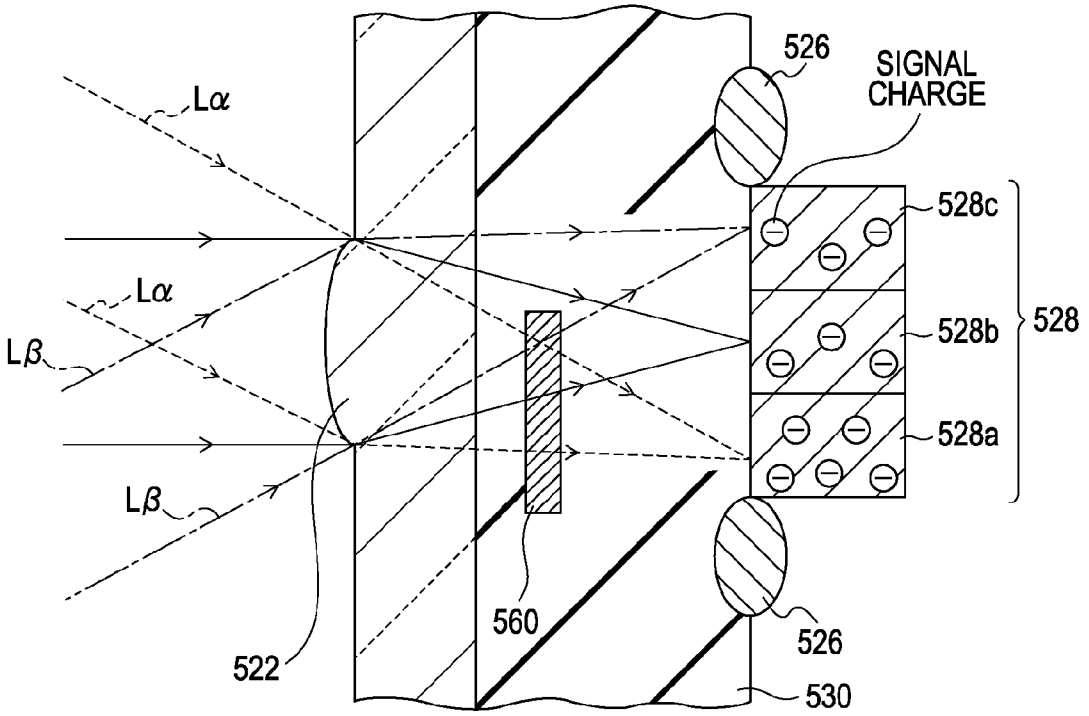

FIG. 10B

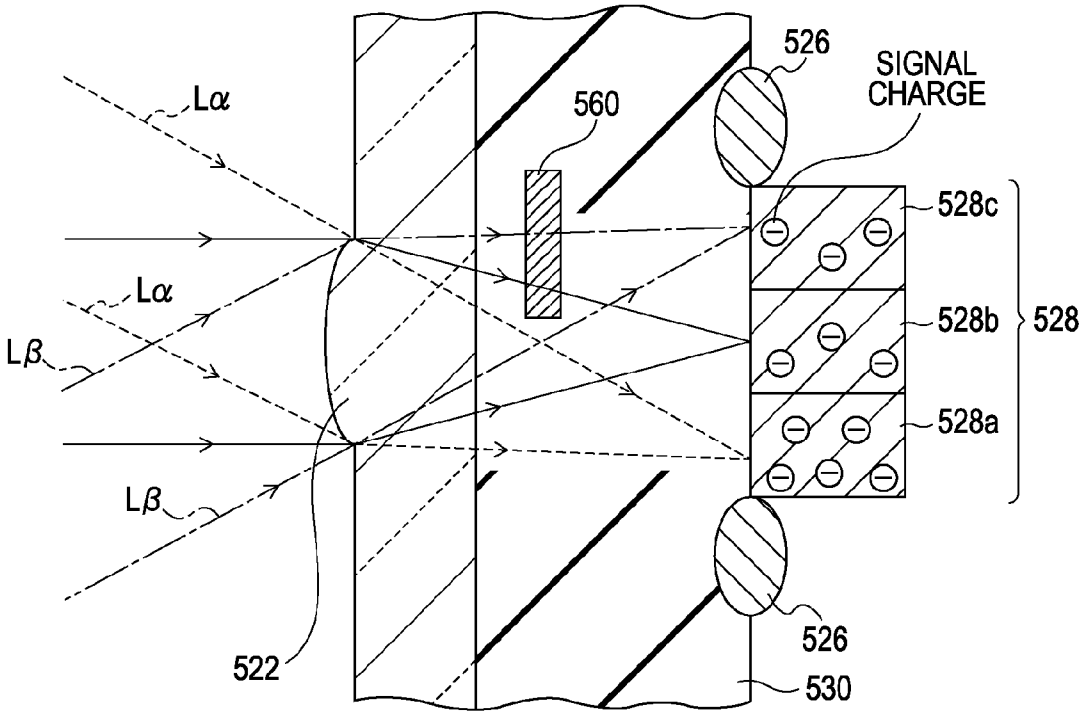

FIG. 11A

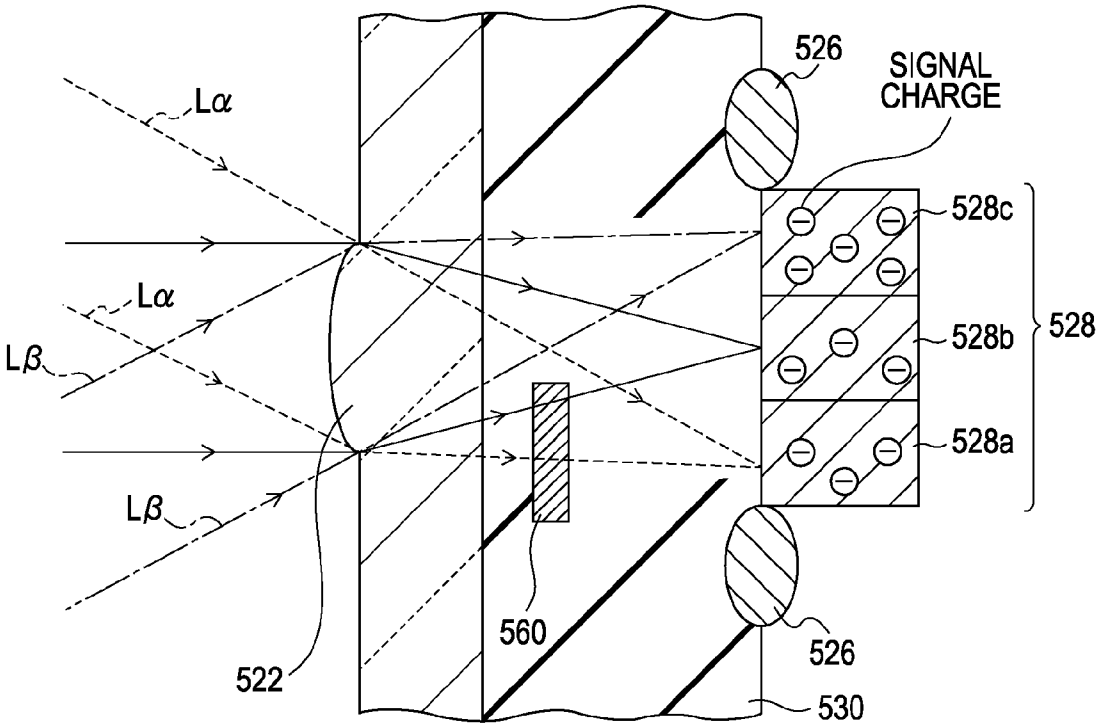

FIG. 11B

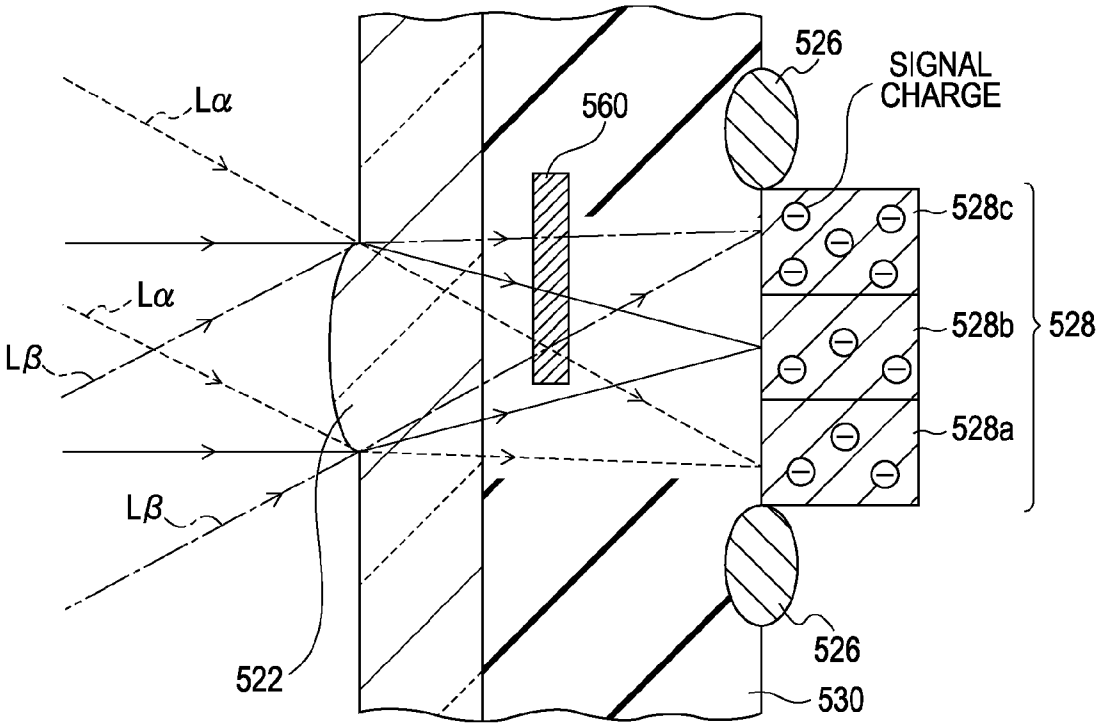

FIG. 12A

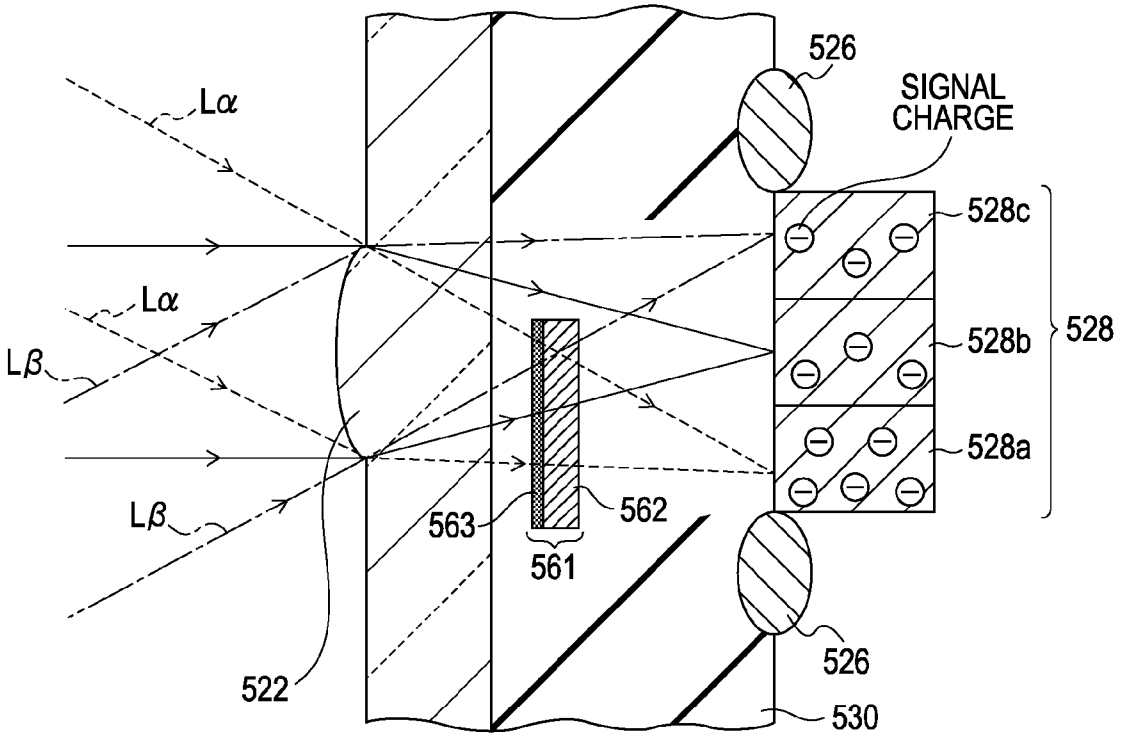

FIG. 12B

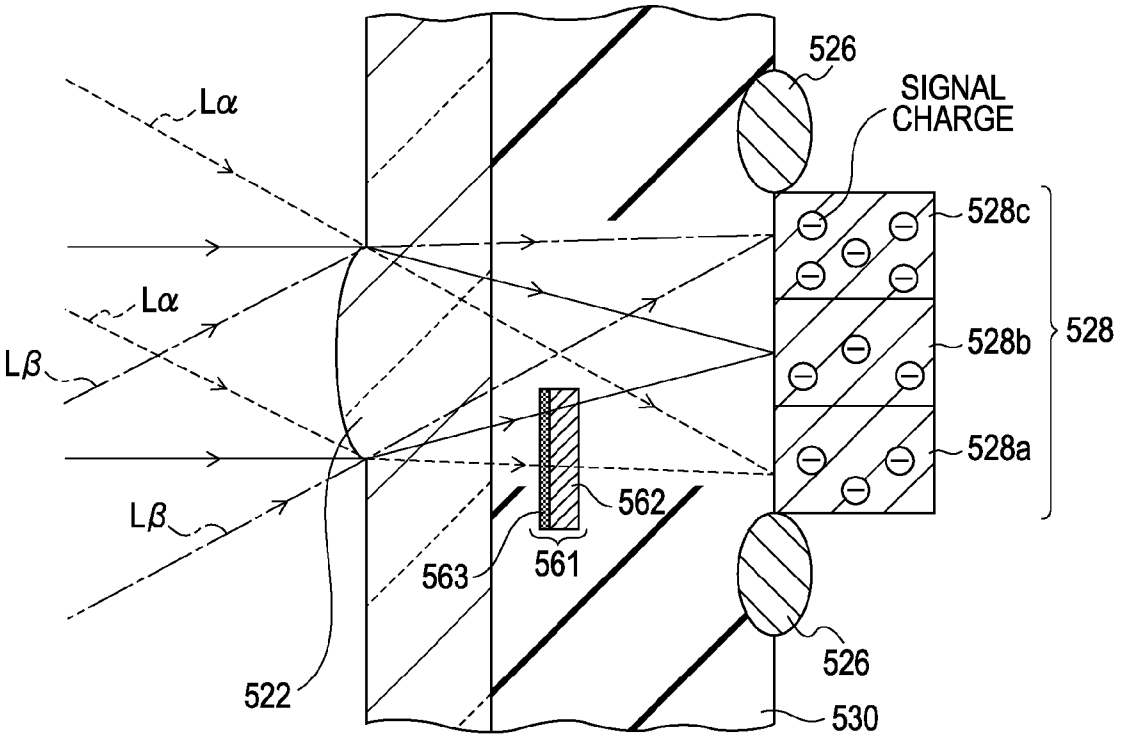

FIG. 13A

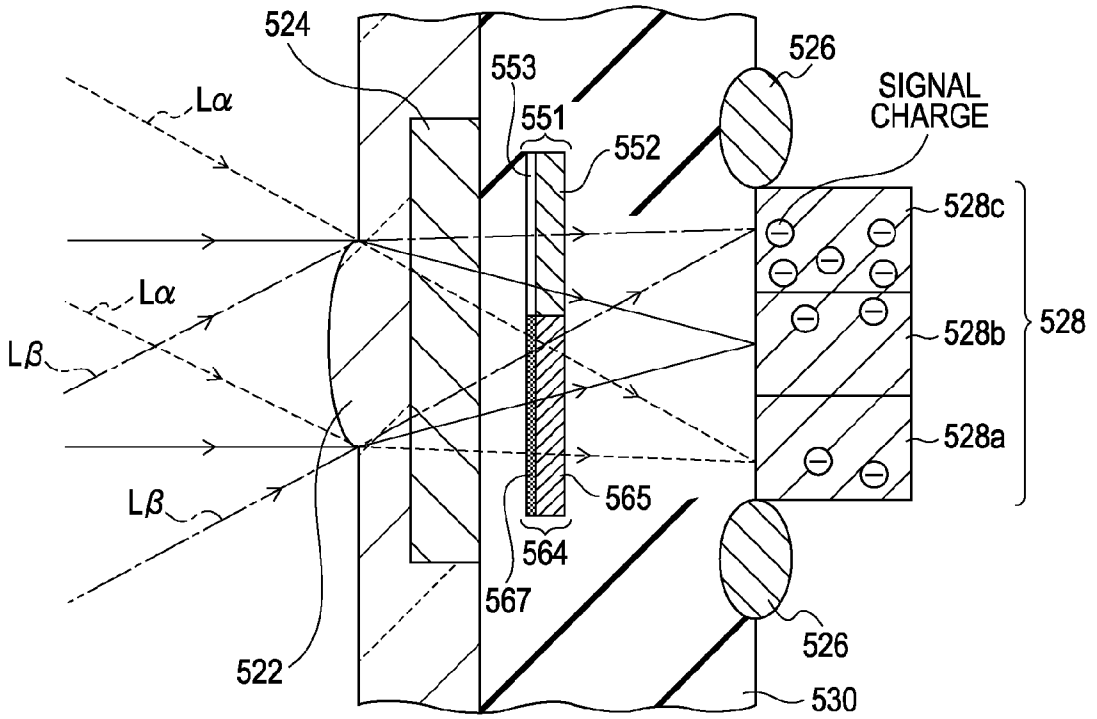

FIG. 13B

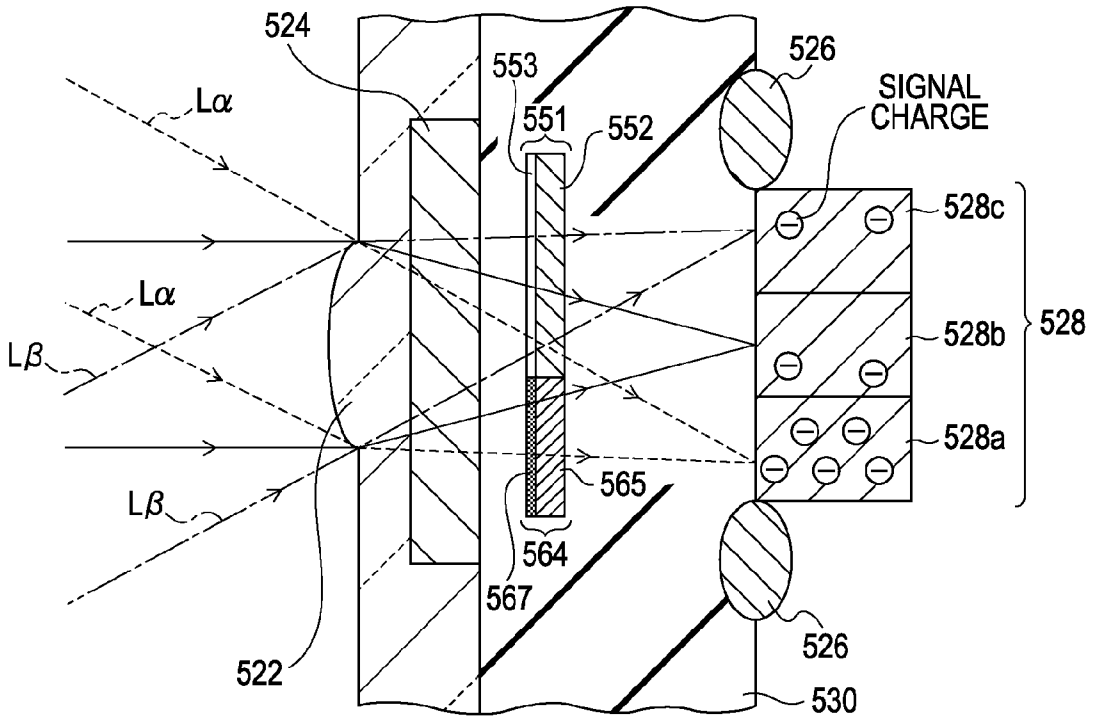

FIG. 14

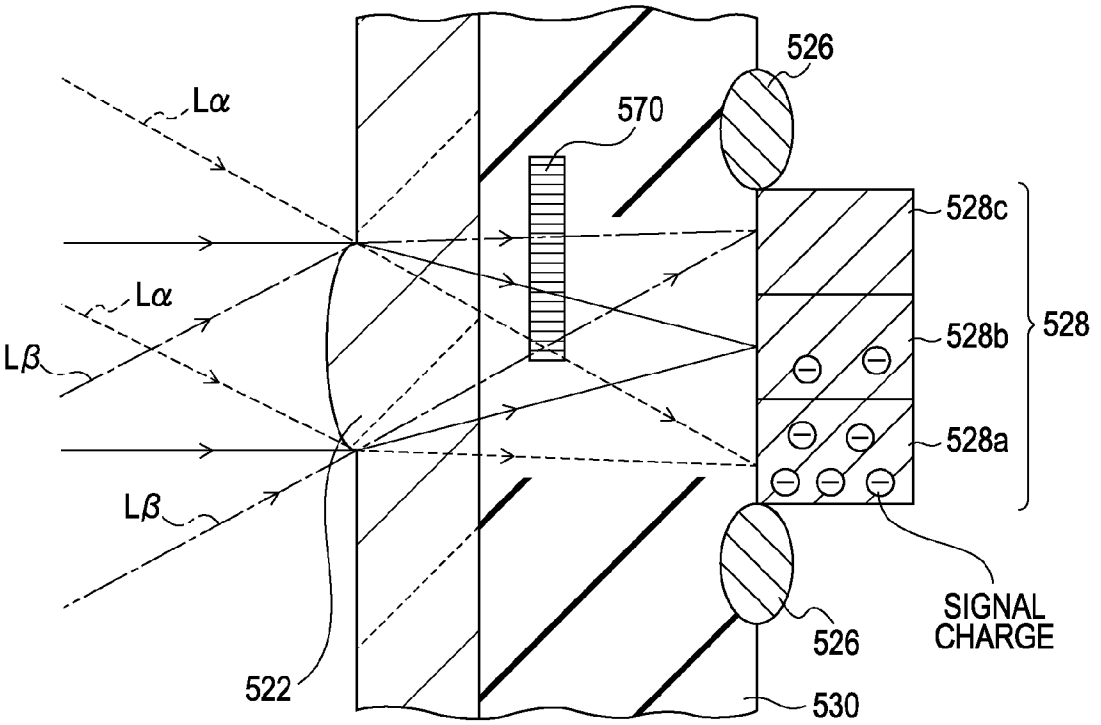
526
570
Lα
528c
Lα
528b
528
Lβ
528a
Lβ
SIGNAL
CHARGE
526
522
530

FIG. 15

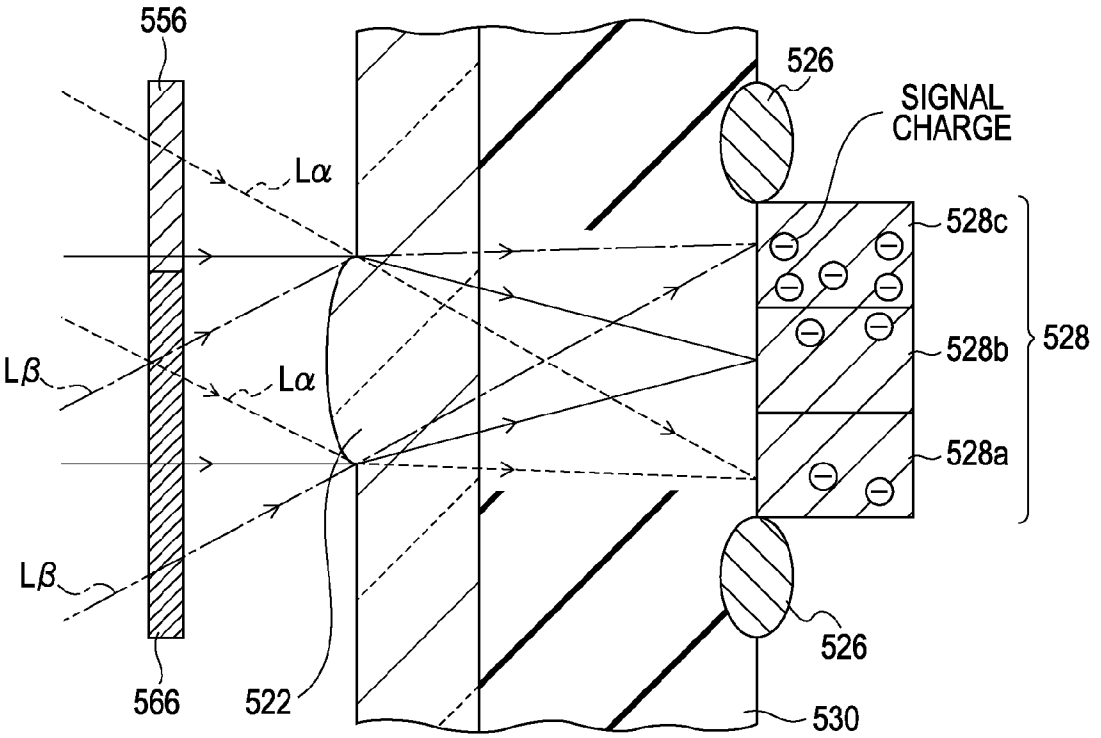
556
526
SIGNAL
CHARGE
Lα
528c
528b
528
Lβ
Lα
528a
Lβ
526
566
522
530

FIG. 16

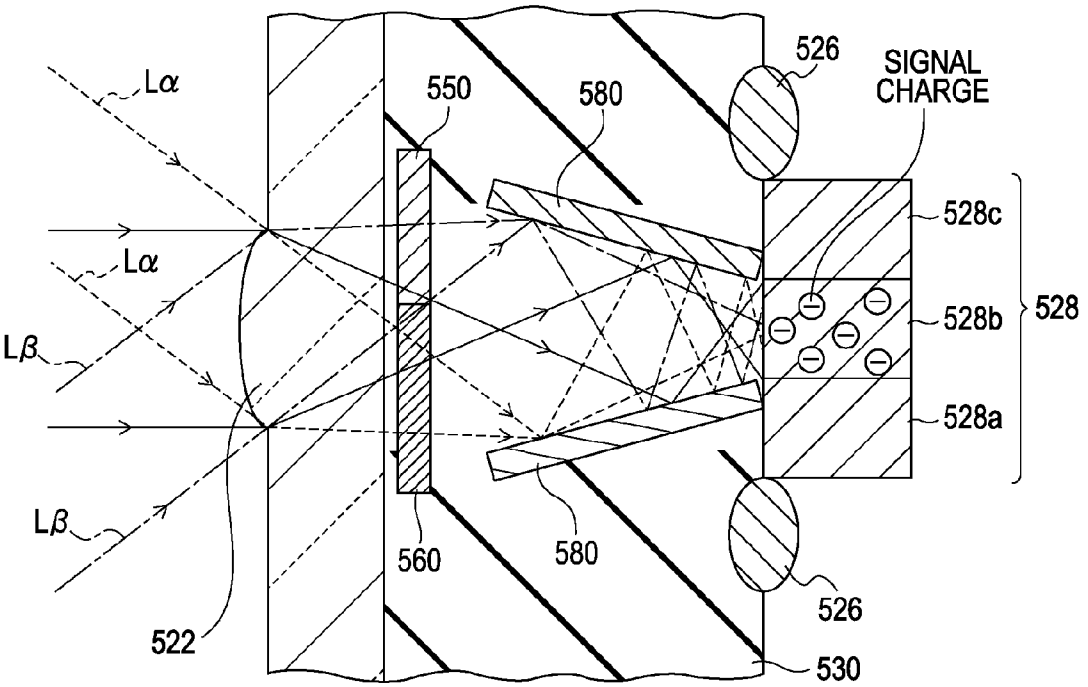
Lα
Lα
Lβ
Lβ
550
580
526
SIGNAL CHARGE
528c
528b
528a
528
560
580
526
522
530

FIG. 17

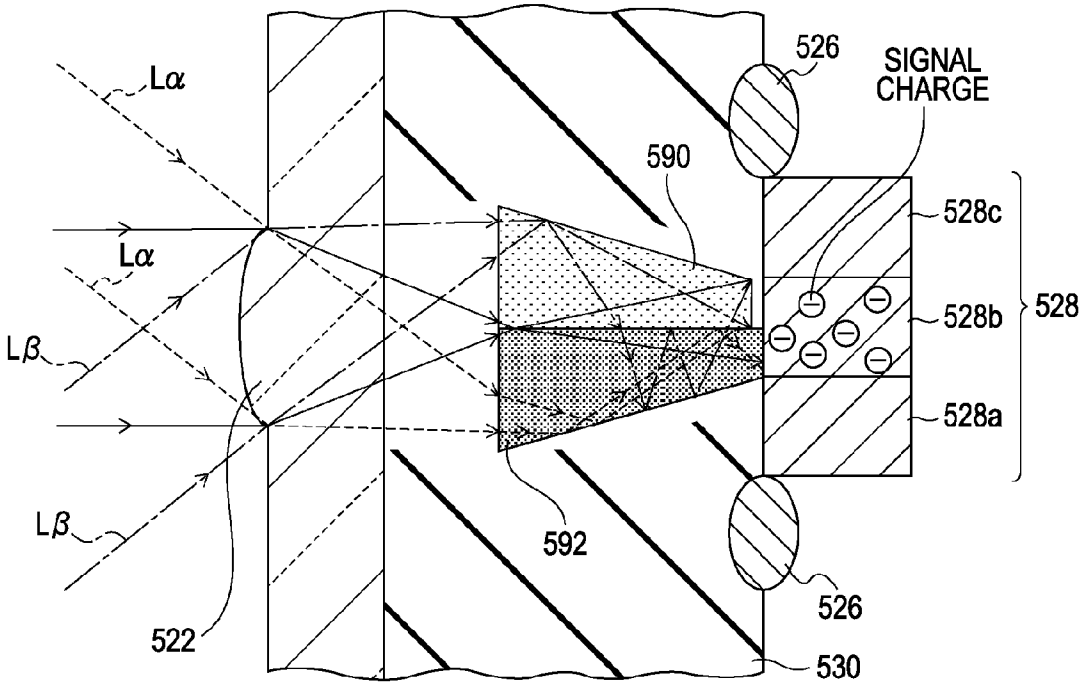
Lα
Lα
Lβ
Lβ
590
526
SIGNAL CHARGE
528c
528b
528a
528
592
526
522
530

FIG. 18

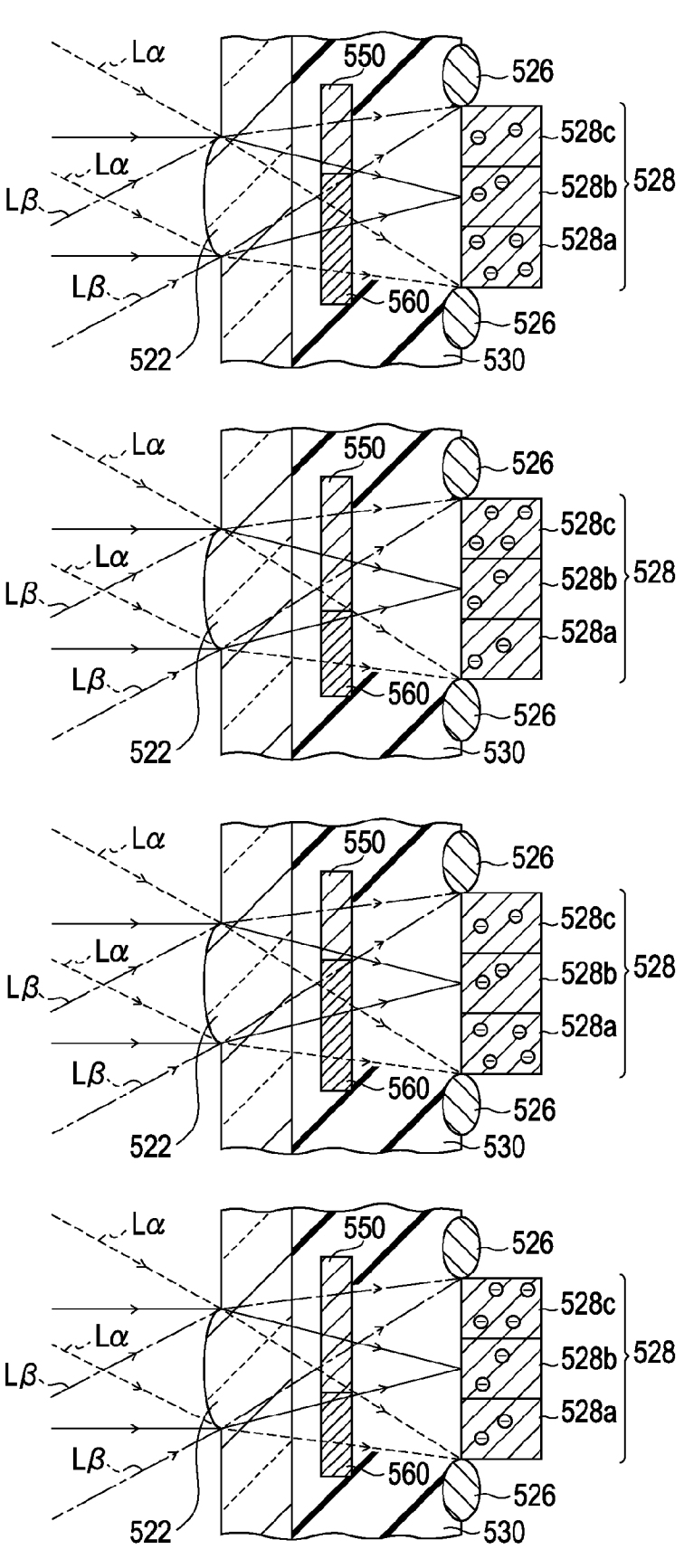

FIG. 19

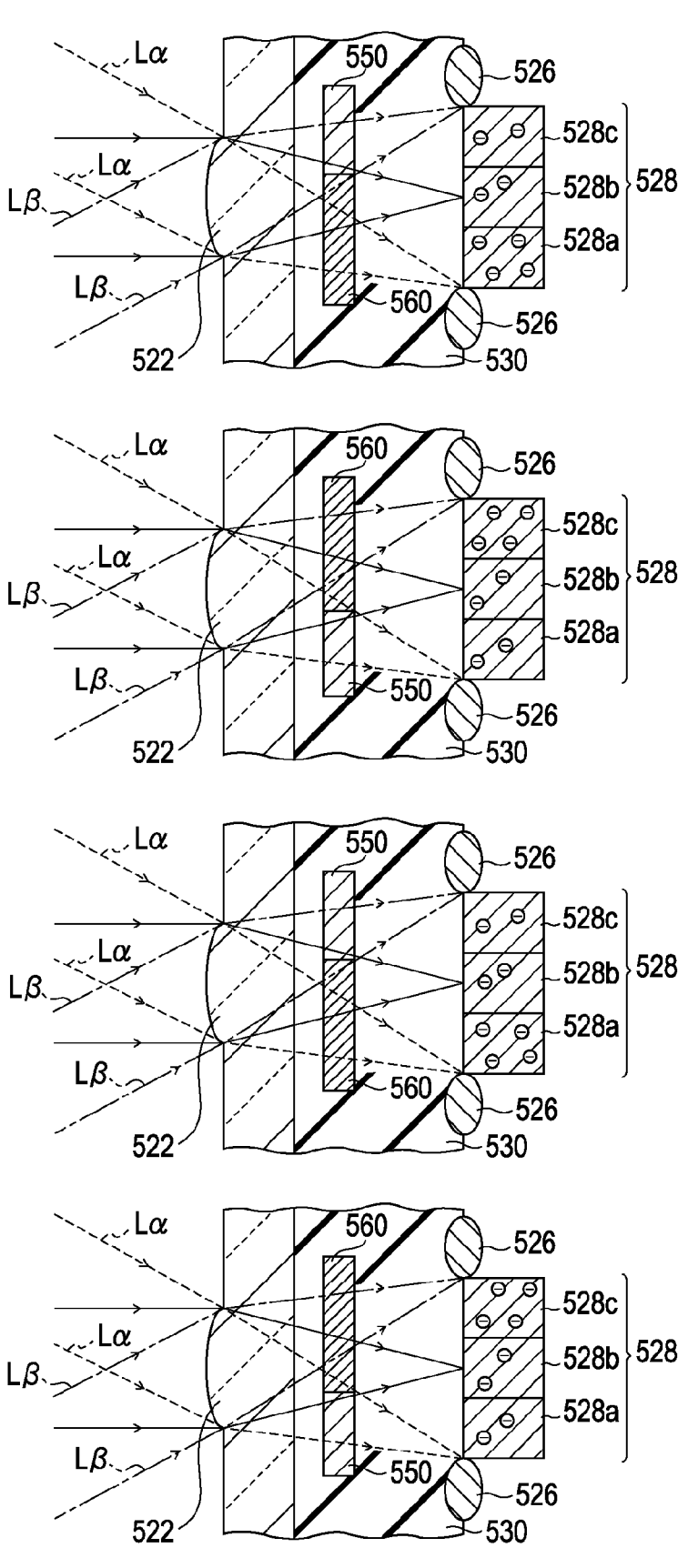

FIG. 20

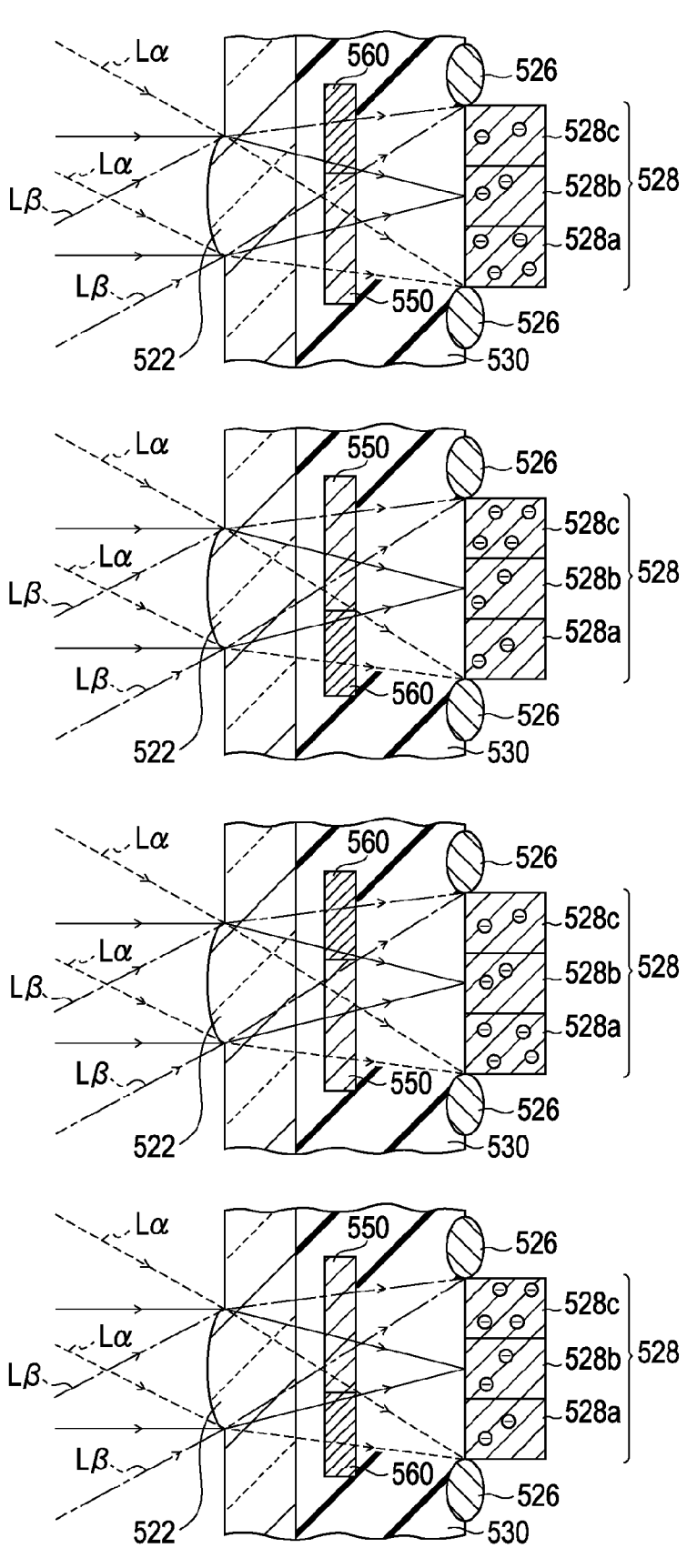

FIG. 21

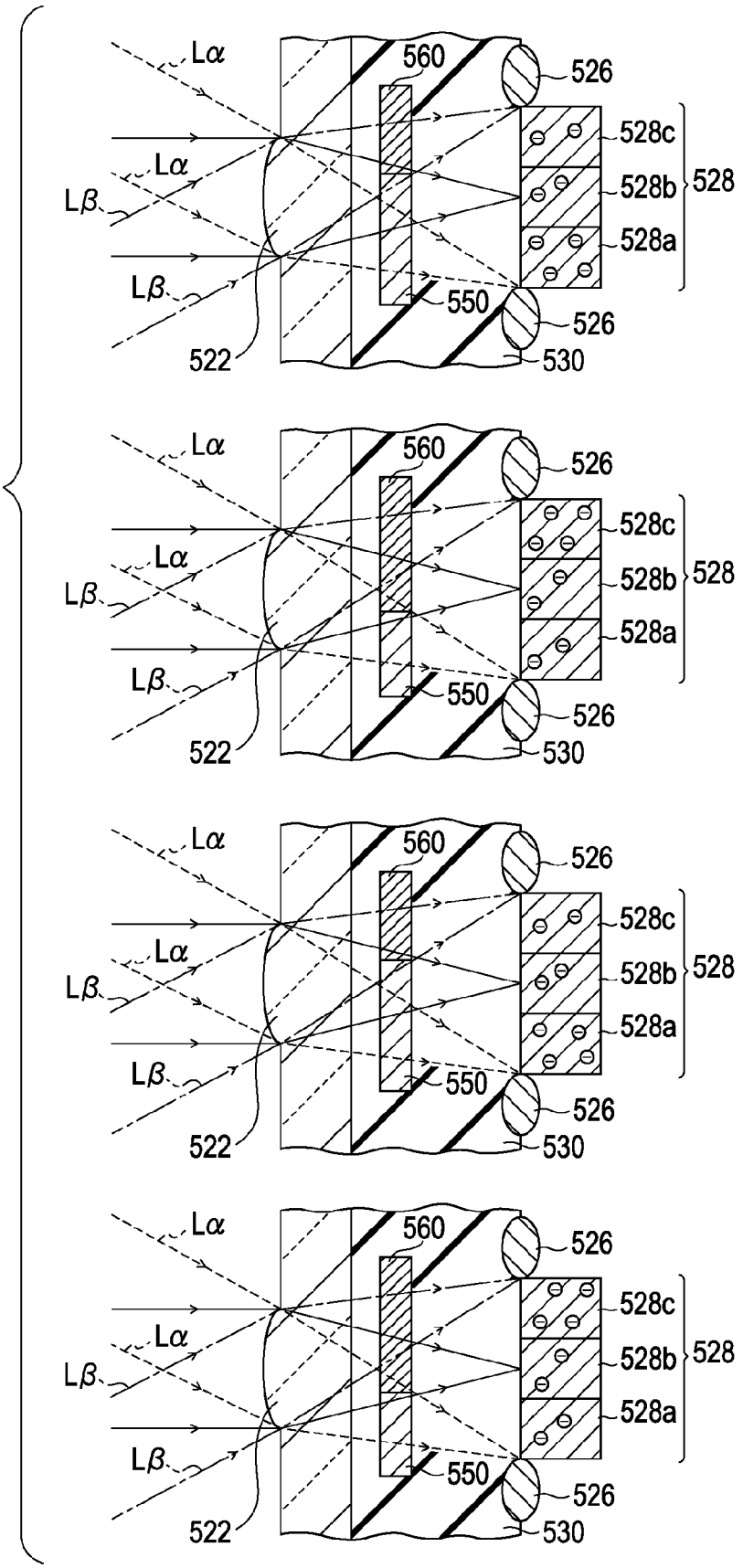

FIG. 22

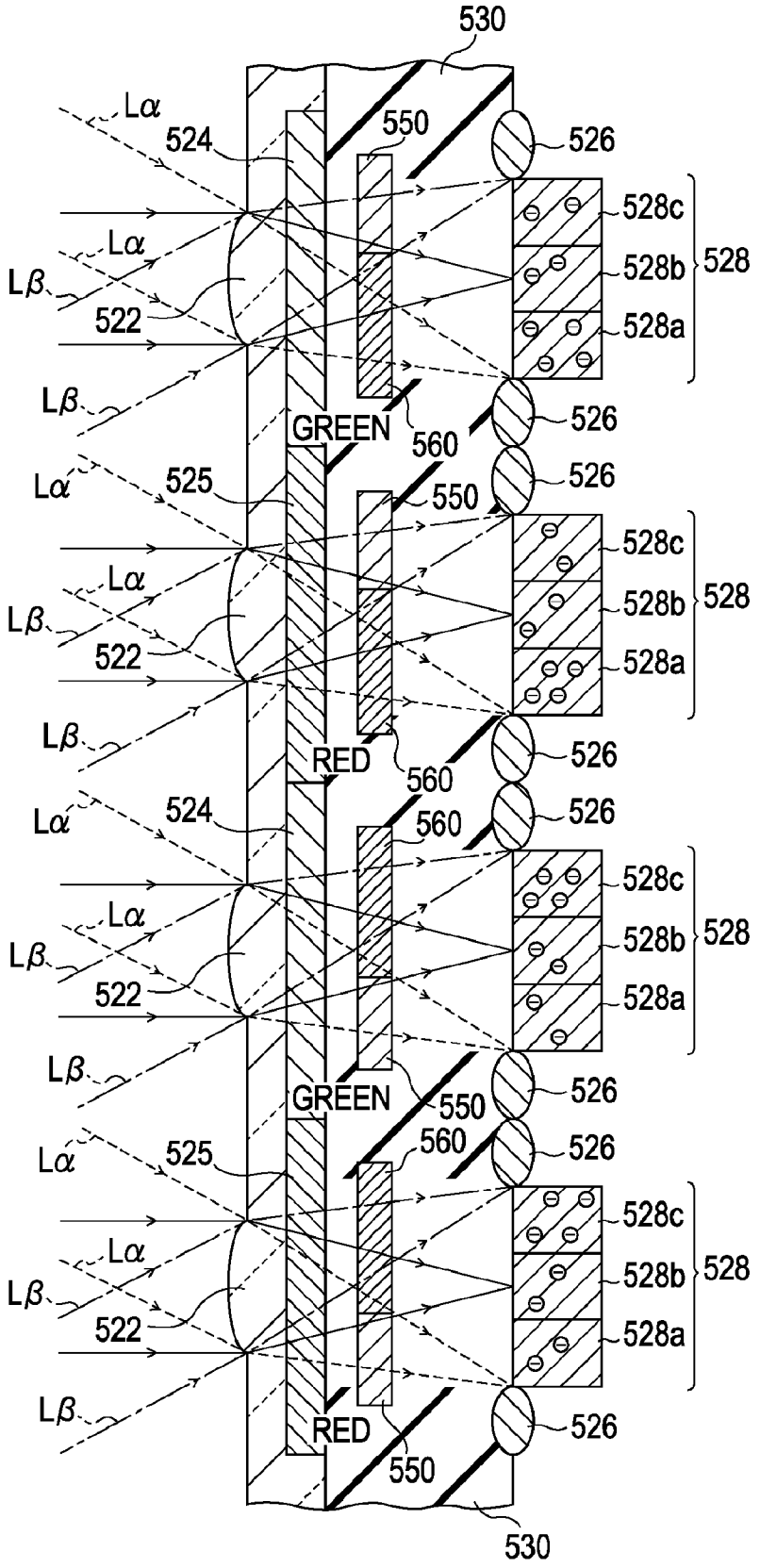
530
Lα
524
550
526
528c
528b
528
528a
Lβ
522
GREEN
560
525
RED
550
530

FIG. 23

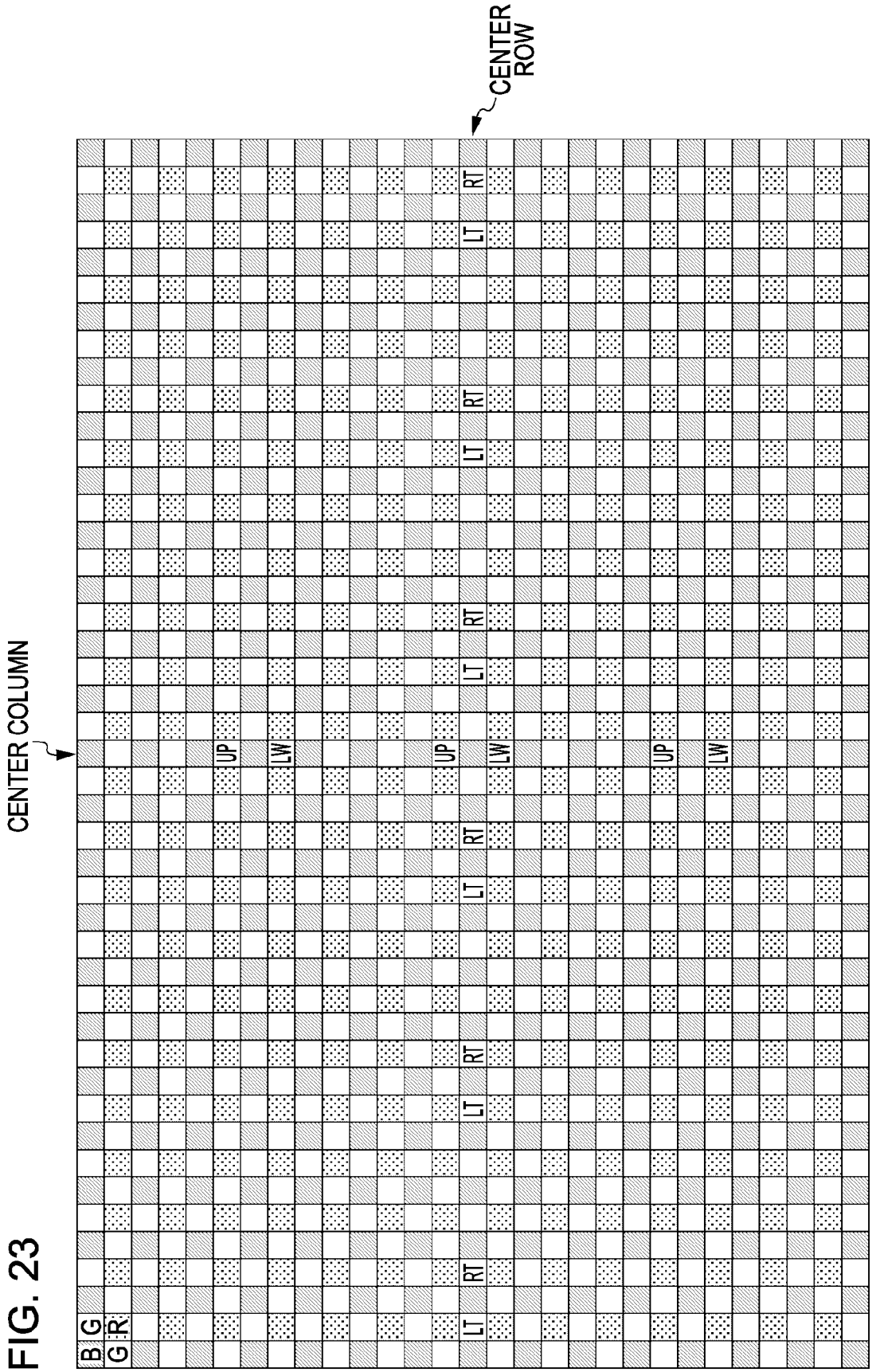

FOCUS DETECTION APPARATUS, IMAGE PICKUP DEVICE, AND ELECTRONIC CAMERA

BACKGROUND OF THE INVENTION

[0001] 1. Field of the Invention

[0002] The present invention relates to a focus detection apparatus, an image pickup device, and an electronic camera, and more particularly to a focus control technique for a structure in which a focus detection system using a phase-difference detection method is installed in an image pickup device.

[0003] 2. Description of the Related Art

[0004] A contrast detection method and a phase-difference detection method have been used as a focus detection technique for an electronic camera or the like. In the contrast detection method, an image signal output from an image pickup device is used to evaluate and determine the sharpness of an object image formed by an image-pickup optical system by using a predetermined function. The position of the image-pickup optical system on an optical axis is adjusted such that the function value approaches an extreme value. In the phase-difference detection method, two object images are formed by respective light beams that pass through different portions of an exit pupil of the image-pickup optical system. A positional phase difference between the two object images is detected, and is converted into an amount of defocus of the image-pickup optical system. According to the phase-difference detection method, since the amount of defocus can be determined, a focused state can be established in a shorter time compared to the contrast detection method in which the evaluation function value is determined while gradually moving the lenses of the image-pickup optical system along the optical axis.

[0005] According to the phase-difference detection method of the related art, a light beam that passes through the image-pickup optical system is divided into two beams by a condenser lens, and the thus-obtained two beams are caused to pass through respective separator lenses so that the beams are focused on a detection device (other than the image pickup device). This structure can be omitted by installing a focus detection system that uses the phase-difference detection method in the image pickup device itself (see, for example, Japanese Unexamined Patent Application Publications Nos. 2001-83407 (FIG. 18) and 2003-244712 (FIG. 2)).

[0006] For example, Japanese Unexamined Patent Application Publication No. 2001-83407 (FIG. 18) proposes a technique in which a photoelectric converter (photodiode) of each pixel is divided into two photoelectric converter parts which receive light beams that pass through an exit pupil of an image-pickup optical system at different areas of the exit pupil. Charge signals obtained by the two photoelectric converter parts of each pixel are compared with charge signals in a focused state that are obtained in advance. Thus, the focus detection using the phase-difference detection method is performed.

[0007] Japanese Unexamined Patent Application Publication No. 2003-244712 (FIG. 2) proposes a technique in which a photoelectric converter is not divided in pixels that are provided with a color filter and used to capture an image, but is divided into two photoelectric converter parts in pixels that are provided with no color filter and used for the focus detection. In the process of reading image signals in an image capturing operation, only the charge signals from the pixels provided with the color filter are used. In the process of focus detection, only the charge signals from the pixels provided with no color filter are used. Thus, the focus detection using the phase-difference detection method is performed.

SUMMARY OF THE INVENTION

[0008] In the above-described structures according to the related art, two photoelectric converter parts are disposed in each pixel such that the photoelectric converter parts are separated from each other. Therefore, the area between the two photoelectric converter parts does not function as a light-receiving portion, and this reduces the light-receiving area of a unit pixel. Accordingly, the maximum storable charge and the dynamic range of the photoelectric converter parts are reduced. Although only some of the pixels are used for the focus detection, portions around the photoelectric converter parts in the pixels used for the focus detection have the most complex structure. Therefore, in the case of reducing the pixel size to increase the number of pixels, the minimum pixel size in the image pickup device is limited by the size of the pixels for the focus detection.

[0009] In light of the above-described situation, it is desirable to provide a technique for suppressing the reduction in the light-receiving area of a unit pixel in the structure in which a focus detection system using a phase-difference detection method is installed in an image pickup device.

[0010] According to a first embodiment of the present invention, a focus detection apparatus includes a plurality of first-type pixels, each first-type pixel including a photoelectric converter, a first optical member, and a second optical member, the photoelectric converter being configured to receive light from an image-pickup optical system and perform photoelectric conversion, the first and second optical members being arranged on an optical path from the image-pickup optical system to the photoelectric converter and having different refractive indices, each first-type pixel outputting a first charge signal corresponding to an amount of light received by the photoelectric converter; a plurality of second-type pixels, each second-type pixel including the photoelectric converter, the first optical member, and the second optical member, the first and second optical members being arranged on the optical path from the image-pickup optical system to the photoelectric converter such that a positional relationship between the first and second optical members and the photoelectric converter differs from the positional relationship in each first-type pixel, each second-type pixel outputting a second charge signal corresponding to an amount of light received by the photoelectric converter; and an image-formation-state detector configured to detect an image formation state of the image-pickup optical system on the basis of the first charge signals and the second charge signals. Accordingly, in the light that passes through the image-pickup optical system, components that contribute to the first charge signals and components that contribute to the second charge signals differ from each other.

[0011] In the first embodiment, each of the first-type pixels and the second-type pixels may further include a light-collecting unit on the optical path from the image-pickup optical system to the photoelectric converter, the light-collecting unit collecting incident light from the image-pickup optical system on the photoelectric converter. The first and second optical members are disposed between the light-collecting unit and the photoelectric converter. Accordingly, the light from the image-pickup optical system can be efficiently collected. In addition, the first and second optical members may be

arranged such that a unit including the first and second optical members is opposed to an entire body of the photoelectric converter, such that the areas in which the first and second optical members are opposed to the photoelectric converter differ from each other, and such that the first and second optical members do not overlap with each other in an optical axis direction of the image-pickup optical system, and the first and second optical members may be arranged such that a position of a boundary between the first and second optical members in each first-type pixel and a position of a boundary between the first and second optical members in each second-type pixel are at opposite sides of an axis that passes through the center of the photoelectric converter in the optical axis direction. Accordingly, light components from different sections of the image-pickup optical system can be selectively collected by the first-type pixels and the second-type pixels.

[0012] In addition, in the first embodiment, each of the first-type pixels and the second-type pixels may further include a light-collecting unit on the optical path from the image-pickup optical system to the photoelectric converter, the light-collecting unit collecting incident light from the image-pickup optical system on the photoelectric converter, and the first and second optical members may be disposed between the image-pickup optical system and the light-collecting unit. Accordingly, the light from the image-pickup optical system can be efficiently collected on the photoelectric converter.

[0013] In addition, in the first embodiment, each of the first-type pixels and the second-type pixels may further include an optical filter on the optical path from the image-pickup optical system to the photoelectric converter, the optical filter selectively transmitting light with a predetermined wavelength range. Accordingly, the wavelength of light incident on the first-type pixels and the second-type pixels can be limited within a predetermined wavelength range.

[0014] In addition, in the first embodiment, each of the first-type pixels may further include a first optical filter or a second optical filter on the optical path from the image-pickup optical system to the photoelectric converter, the first optical filter selectively transmitting light with a predetermined wavelength range, the second optical filter selectively transmitting light with another predetermined wavelength range, and each of the second-type pixels may further include the first optical filter or the second optical filter on the optical path from the image-pickup optical system to the photoelectric converter. Accordingly, the wavelength of light incident on some of the first-type pixels and the wavelength of light incident on other first-type pixels can be limited within different wavelength ranges. In addition, the wavelength of light incident on some of the second-type pixels and the wavelength of light incident on other second-type pixels can be limited within different wavelength ranges.

[0015] In addition, in the first embodiment, each of the first-type pixels and the second-type pixels may further include a waveguide member at a position between a unit including the first optical member and the second optical member and the photoelectric converter, the waveguide member guiding incident light from the image-pickup optical system toward the photoelectric converter by reflection. Accordingly, the length of the optical path of the light incident on the photoelectric converter after passing through the first or second optical member can be increased.

[0016] In addition, in the first embodiment, at least one of the first and second optical members may be composed of single crystal silicon, amorphous silicon, polysilicon, germanium, silicon dioxide, silicon nitride, siloxane, tungsten, aluminum, or copper. Accordingly, the first optical member or the second optical member can be formed of a single material by performing a suitable manufacturing process.

[0017] In addition, in the first embodiment, at least one of the first and second optical members may be provided with a film made of an optical material on a surface facing the image-pickup optical system, the optical material having a reflectance that is lower than a reflectance of an inner section of the at least one of the first and second optical members. Accordingly, the light from the image-pickup optical system can be efficiently collected on the photoelectric converter.

[0018] According to a second embodiment of the present invention, a focus detection apparatus includes a plurality of first-type pixels, each first-type pixel including a photoelectric converter configured to receive light from an image-pickup optical system and perform photoelectric conversion, a light-collecting unit configured to collect incident light from the image-pickup optical system on the photoelectric converter, and an optical layer disposed on an optical path from the image-pickup optical system to the photoelectric converter, each first-type pixel outputting a first charge signal corresponding to an amount of light received by the photoelectric converter; a plurality of second-type pixels, each second-type pixel including the photoelectric converter, the light-collecting unit, and the optical layer disposed on the optical path from the image-pickup optical system to the photoelectric converter, each second-type pixel outputting a second charge signal corresponding to an amount of light received by the photoelectric converter; and an image-formation-state detector configured to detect an image formation state of the image-pickup optical system on the basis of the first charge signals and the second charge signals. Each of the first-type pixels and the second-type pixels further includes an optical member having an refractive index that is different from a refractive index of the optical layer. The optical member included in each of the first-type pixels and the second-type pixels is disposed such that a peripheral edge of the optical member is separated from a straight line that passes through the center of the photoelectric converter along the optical axis direction of the image-pickup optical system and such that the optical member is opposed to only a part of the photoelectric converter. The optical member is disposed such that a position of one end of the optical member that is close to the straight line in each of the first-type pixels and a position of one end of the optical member that is close to the straight line in each of the second-type pixels are at the opposite sides of the straight line. Accordingly, light components from different sections of the image-pickup optical system can be selectively collected by the first-type pixels and the second-type pixels.

[0019] In the second embodiment, the optical member may be provided with a film made of an optical material on a surface facing the image-pickup optical system, the optical material having a reflectance that is lower than a reflectance of an inner section of the optical member. Accordingly, the light from the image-pickup optical system can be efficiently collected on the photoelectric converter.

[0020] According to a third embodiment of the present invention, a focus detection apparatus includes a plurality of first-type pixels, each first-type pixel including a photoelectric converter configured to receive light from an image-pickup optical system and perform photoelectric conversion

and an optical member disposed on an optical path from the image-pickup optical system to the photoelectric converter such that the optical member is opposed to only a part of the photoelectric converter, the optical member having a laminated structure in which films made of optical materials having different refractive indices are stacked together, each first-type pixel outputting a first charge signal corresponding to an amount of light received by the photoelectric converter; a plurality of second-type pixels, each second-type pixel including the photoelectric converter and the optical member disposed on the optical path from the image-pickup optical system to the photoelectric converter such that a positional relationship between the optical member and the photoelectric converter differs from the positional relationship in each first-type pixel, each second-type pixel outputting a second charge signal corresponding to an amount of light received by the photoelectric converter; and an image-formation-state detector configured to detect an image formation state of the image-pickup optical system on the basis of the first charge signals and the second charge signals. Accordingly, if the optical member has a suitable shape and is suitably disposed, in the light that passes through the image-pickup optical system, components that contribute to the first charge signals and components that contribute to the second charge signals differ from each other.

[0021] In the third embodiment, the optical member may have a laminated structure in which the films made of the optical materials having different refractive indices are alternately stacked such that a normal line of lamination surfaces of the films is perpendicular to the optical axis direction of the image-pickup optical system. Accordingly, light that is obliquely incident on the lamination surfaces in the optical member causes a phase difference after passing through the optical member.

[0022] According to a fourth embodiment of the present invention, a focus detection apparatus includes a plurality of first-type pixels, each first-type pixel including a photoelectric converter configured to receive light from an image-pickup optical system and perform photoelectric conversion, an optical layer disposed on an optical path from the image-pickup optical system to the photoelectric converter, a first waveguide disposed in the optical layer and having a refractive index that is higher than a refractive index of the optical layer, and a second waveguide disposed adjacent to the first waveguide in the optical layer and having a refractive index that is higher than the refractive index of the first waveguide, each first-type pixel outputting a first charge signal corresponding to an amount of light received by the photoelectric converter; a plurality of second-type pixels, each second-type pixel including the photoelectric converter, the optical layer disposed on the optical path from the image-pickup optical system to the photoelectric converter, and the first and second waveguides disposed adjacent to each other in the optical layer such that a positional relationship between the first and second waveguides and the photoelectric converter differs from the positional relationship in each first-type pixel, each second-type pixel outputting a second charge signal corresponding to an amount of light received by the photoelectric converter; and an image-formation-state detector configured to detect an image formation state of the image-pickup optical system on the basis of the first charge signals and the second charge signals. Accordingly, in the light that passes through the image-pickup optical system, components that contribute to the first charge signals and components that contribute to the second charge signals differ from each other.

[0023] In the fourth embodiment, each of the first-type pixels and the second-type pixels may further include a light-collecting unit on the optical path, the light-collecting unit collecting incident light from the image-pickup optical system on the photoelectric converter, and the first and second waveguides may be arranged such that the positional relationship between the first and second waveguides in the first-type pixel and the positional relationship between the first and second waveguides in the second-type pixel are symmetrical to each other about an axis that passes through the center of the photoelectric converter in an optical axis direction of the image-pickup optical system. Accordingly, light components from different sections of the image-pickup optical system can be selectively collected by the first-type pixels and the second-type pixels.

[0024] According to a fifth embodiment of the present invention, an image pickup device includes a plurality of first-type pixels, each first-type pixel including a photoelectric converter, a first optical member, and a second optical member, the photoelectric converter being configured to receive light from an image-pickup optical system and perform photoelectric conversion, the first and second optical members being arranged on an optical path from the image-pickup optical system to the photoelectric converter and having different refractive indices, each first-type pixel outputting a first charge signal corresponding to an amount of light received by the photoelectric converter; a plurality of second-type pixels, each second-type pixel including the photoelectric converter, the first optical member, and the second optical member, the first and second optical members being arranged on the optical path from the image-pickup optical system to the photoelectric converter such that a positional relationship between the first and second optical members and the photoelectric converter differs from the positional relationship in each first-type pixel, each second-type pixel outputting a second charge signal corresponding to an amount of light received by the photoelectric converter; and a plurality of image pickup pixels, each image pickup pixel including the photoelectric converter and outputting a third charge signal corresponding to an amount of light received by the photoelectric converter. Accordingly, if the first and second optical members are suitably arranged, in the light that passes through the image-pickup optical system, components that contribute to the first charge signals and components that contribute to the second charge signals differ from each other.

[0025] According to a sixth embodiment of the present invention, an electronic camera includes a plurality of first-type pixels, each first-type pixel including a photoelectric converter, a first optical member, and a second optical member, the photoelectric converter being configured to receive light from an image-pickup optical system and perform photoelectric conversion, the first and second optical members being arranged on an optical path from the image-pickup optical system to the photoelectric converter and having different refractive indices, each first-type pixel outputting a first charge signal corresponding to an amount of light received by the photoelectric converter; a plurality of second-type pixels, each second-type pixel including the photoelectric converter, the first optical member, and the second optical member, the first and second optical members being arranged on the optical path from the image-pickup optical system to the photoelectric converter such that a positional relationship between

the first and second optical members and the photoelectric converter differs from the positional relationship in each first-type pixel, each second-type pixel outputting a second charge signal corresponding to an amount of light received by the photoelectric converter; a plurality of image pickup pixels, each image pickup pixel including the photoelectric converter and outputting a third charge signal corresponding to an amount of light received by the photoelectric converter; a signal processor configured to generate image data on the basis of the third charge signals; an image-formation-state detector configured to detect an image formation state of the image-pickup optical system on the basis of the first charge signals and the second charge signals; and a focus controller configured to adjust a lens position of the image-pickup optical system such that the lens position approaches an in-focus position on the basis of the image formation state determined by the image-formation-state detector. Accordingly, in the light that passes through the image-pickup optical system, components that contribute to the first charge signals and components that contribute to the second charge signals differ from each other.

[0026] According to the embodiments of the present invention, in the structure in which a focus detection system using a phase-difference detection method is installed in an image pickup device, it is not necessary to divide the photoelectric converter in the pixels used for the focus detection. Therefore, reduction in the light-receiving area of a unit pixel can be prevented.

BRIEF DESCRIPTION OF THE DRAWINGS

[0027] FIG. **1** is a block diagram of a camera system according to a first embodiment of the present invention;

[0028] FIG. **2** is a schematic plan view illustrating a pixel arrangement in an image pickup device according to the first embodiment of the present invention;

[0029] FIG. **3** is an enlarged partial view of FIG. **2** illustrating an area around a center pixel column in which focus detection pixels are arranged;

[0030] FIGS. **4**A and **4**B are diagrams illustrating an image pickup pixel in the image pickup device according to the first embodiment of the present invention;

[0031] FIGS. **5**A and **5**B are diagrams illustrating a focus detection pixel that collects light from a lower section of an image-pickup optical system in the image pickup device according to the first embodiment of the present invention;

[0032] FIG. **6** is a diagram illustrating a phase difference between light that passes through a low-refractive-index filter and light that passes through a high-refractive-index filter;

[0033] FIGS. **7**A and **7**B are diagrams illustrating a focus detection pixel that collects light from an upper section of the image-pickup optical system in the image pickup device according to the first embodiment of the present invention;

[0034] FIGS. **8**A, **8**B, and **8**C are diagrams illustrating intensities of light incident on focus detection pixels in the cases of front focus, in-focus, and rear focus, respectively;

[0035] FIG. **9** is a schematic sectional view of a focus detection pixel in an image pickup device included in a camera system according to a second embodiment of the present invention;

[0036] FIGS. **10**A and **10**B are schematic sectional views illustrating focus detection pixels that collect light from an upper section of an image-pickup optical system in an image pickup device included in a camera system according to a third embodiment of the present invention;

[0037] FIGS. **11**A and **11**B are schematic sectional views illustrating focus detection pixels that collect light from a lower section of the image-pickup optical system in the image pickup device included in the camera system according to the third embodiment of the present invention;

[0038] FIGS. **12**A and **12**B are schematic sectional views illustrating the structures in which antireflection films are provided on the surfaces of high-refractive-index filters in the focus detection pixels according to the third embodiment of the present invention;

[0039] FIGS. **13**A and **13**B are schematic sectional views illustrating the structures in which antireflection films are provided on the surfaces of the low-refractive-index filters and the high-refractive-index filters in the focus detection pixels according to the first embodiment of the present invention;

[0040] FIG. **14** is a schematic sectional view of a focus detection pixel in an image pickup device included in a camera system according to a fourth embodiment of the present invention;

[0041] FIG. **15** is a schematic sectional view of a focus detection pixel in an image pickup device included in a camera system according to a fifth embodiment of the present invention;

[0042] FIG. **16** is a schematic sectional view of a focus detection pixel in an image pickup device included in a camera system according to a sixth embodiment of the present invention;

[0043] FIG. **17** is a schematic sectional view of a focus detection pixel in an image pickup device included in a camera system according to a seventh embodiment of the present invention;

[0044] FIG. **18** is a schematic sectional view illustrating a first example of arrangement of the refractive filters in four focus detection pixels that collect light from the upper and lower sections of the image-pickup optical system according to the embodiments of the present invention;

[0045] FIG. **19** is a schematic sectional view illustrating a second example of arrangement of the refractive filters in four focus detection pixels that collect light from the upper and lower sections of the image-pickup optical system according to the embodiments of the present invention;

[0046] FIG. **20** is a schematic sectional view illustrating a third example of arrangement of the refractive filters in four focus detection pixels that collect light from the upper and lower sections of the image-pickup optical system according to the embodiments of the present invention;

[0047] FIG. **21** is a schematic sectional view illustrating a fourth example of arrangement of the refractive filters in four focus detection pixels that collect light from the upper and lower sections of the image-pickup optical system according to the embodiments of the present invention;

[0048] FIG. **22** is a schematic sectional view illustrating four focus detection pixels that collect light from the upper and lower sections of the image-pickup optical system in a modification of the first embodiment in which pixels that selectively transmit green light and pixels that selectively transmit red light are both used as the focus detection pixels; and

[0049] FIG. **23** is a schematic plan view illustrating a modification of the arrangement of the focus detection pixels in the

overall area of the image pickup device according to the embodiments of the present invention.

DESCRIPTION OF THE PREFERRED EMBODIMENTS

[0050] Embodiments of the present invention will now be described in the following order:

[0051] 1. First Embodiment (example of a camera system including a focus detection apparatus provided with two filters having different refractive indices)

[0052] 2. Second Embodiment (example in which no color filter is provided)

[0053] 3. Third Embodiment (example in which no low-refractive-index filter is provided)

[0054] 4. Fourth Embodiment (example in which a laminated filter is provided)

[0055] 5. Fifth Embodiment (example in which filters are disposed closer to an image-pickup optical system than a microlens)

[0056] 6. Sixth Embodiment (example in which a waveguide member are additionally provided)

[0057] 7. Seventh Embodiment (example in which an intermediate-refractive-index waveguide and a high-refractive-index waveguide are provided)

[0058] 8. Modifications of arrangement of refractive filters in focus detection pixels according to embodiments of the present invention

[0059] 9. Modification of arrangement of color filters according to embodiments of the present invention

[0060] 10. Modification of arrangement of focus detection pixels in an image pickup device according to embodiments of the present invention

1. First Embodiment

Overall Structure of Camera System

[0061] FIG. **1** is a block diagram of a camera system **100** according to a first embodiment of the present invention. The camera system **100** includes a replaceable image pickup lens unit **200** and a replaceable recording medium **300** that are attached to or inserted in an electronic camera **400**.

[0062] The image pickup lens unit **200** adjusts the amount of light from an object and forms an optical image of the object on a pixel array plane in an image pickup device **500** included in the electronic camera **400**. The image pickup lens unit **200** includes an image-pickup optical system **210**, a stop-driving mechanism **220**, a lens-driving mechanism **230**, and a lens controller **240**.

[0063] The image-pickup optical system **210** forms the optical image of the object. The image-pickup optical system **210** includes a convex lens **212** that collects light from the object, a stop **214** that adjusts the amount of light that passes therethrough, and a concave lens **216**. Although only two lenses (**212** and **216**) are shown in FIG. **1** for simplicity, more lenses are generally included in the image-pickup optical system **210** in practice.

[0064] The lens controller **240** has the following two functions. The first function is to adjust the stop **214** so as to satisfy suitable exposure conditions by controlling the stop-driving mechanism **220** in accordance with a command from an image pickup controller **422**, which will be described below. The second function is to adjust the positions of the convex lens **212** and the concave lens **216** on an optical axis of the image-pickup optical system **210** so as to establish a focused state by controlling the lens-driving mechanism **230** in accordance with a command from a focus controller **418**, which will be described below.

[0065] In the electronic camera **400**, the image pickup lens unit **200** forms the optical image of the object on the pixel array plane in the image pickup device **500**. The electronic camera **400** generates image data of the object image, and records the generated image data on the recording medium **300**. The electronic camera **400** includes a shutter **406**, the image pickup device **500**, an A/D converter **410**, an analog signal processor **412**, a timing generator **414**, a shutter-driving mechanism **416**, the focus controller **418**, an image-formation-position detector **420**, and the image pickup controller **422**. The electronic camera **400** also includes a liquid crystal display **402**, a liquid-crystal-display driving circuit **404**, an operating unit **424**, a system bus **426**, a recording unit **428**, a memory **430**, and an image processor **432**.

[0066] The image pickup controller **422** performs system control of the electronic camera **400** through the system bus **426**.

[0067] The shutter **406** controls the exposure time for the pixel array plane in the image pickup device **500**, and includes a front curtain and a rear curtain.

[0068] The shutter-driving mechanism **416** controls movements of the front and rear curtains of the shutter **406** in accordance with a command from the image pickup controller **422**.

[0069] The timing generator **414** drives the image pickup device **500** in accordance with a command from the image pickup controller **422**.

[0070] The image pickup device **500** receives light from the image-pickup optical system **210** and performs photoelectric conversion of the received light. The image pickup device **500** includes a plurality of focus detection pixels and many image pickup pixels. The focus detection pixels output charge signals used for focus detection based on the phase-difference detection method. The "image pickup pixels" referred to in this specification are so-called effective pixels which are pixels other than the optical black pixels and which output charge signals on the basis of which the image data is generated. The focus detection pixels and the image pickup pixels both accumulate electric charges in accordance with the amount of light received thereby, and output (analog) charge signals.

[0071] The analog signal processor **412** subjects the charge signals from the respective pixels output by the image pickup device **500** to a clamping process, a sensitivity correction process, and the like.

[0072] The A/D converter **410** converts the (analog) charge signals from the pixels into digital signals after the charge signals are subjected to the processes performed by the analog signal processor **412**.

[0073] The image processor **432** extracts digital signals corresponding to the image pickup pixels from the digital signals corresponding to all of the pixels output from the A/D converter **410**, and subjects the extracted digital signals to a color interpolation process and other processes, thereby producing image data.

[0074] The recording unit **428** records the image data generated by the image processor **432** on the recording medium **300**.

[0075] The liquid-crystal-display driving circuit **404** causes the liquid crystal display **402** to display an image

corresponding to the image data generated by the image processor **432** in response to a command from the image pickup controller **422**.

[0076] The liquid crystal display **402** displays a moving image of the object while a user is waiting for the right moment to shoot, and displays a still image after the image of the object is captured.

[0077] The system bus **426** transmits the digital signals output from the A/D converter **410**, the image data, and control signals output by the image pickup controller **422**.

[0078] The image-formation-position detector **420** detects the position of the focal plane on the optical axis of the image-pickup optical system **210** on the basis of the digital signals corresponding to the charge signals from the focus detection pixels.

[0079] The focus controller **418** moves the focal plane to the pixel array plane of the image pickup device **500** by controlling the lens-driving mechanism **230** through the lens controller **240** on the basis of the position of the focal plane detected by the image-formation-position detector **420**.

[0080] The memory **430** temporarily stores the image data before the image data is subjected to data conversion into a predetermined format or processing.

[0081] The operating unit **424** is provided to receive an operation input from the user, and includes an exposure-condition setting button, a release button, etc. (not shown).

[0082] According to the present embodiment, a focus detection system using the phase-difference detection method is installed in the focus detection pixels included in the image pickup device **500**. Other structures of the present embodiment are similar to those of a camera system according to the related art, and explanations thereof are thus omitted.

[0083] The image-formation-position detector **420** is an example of an image-formation-state detector described in the claims. The image pickup device **500** is an example of a focus detection apparatus described in the claims. The analog signal processor **412**, the A/D converter **410**, and the image processor **432** are examples an image processor described in the claims.

Pixel Arrangement in Image Pickup Device

[0084] FIG. **2** is a schematic plan view illustrating the pixel arrangement in the image pickup device **500**. As shown by R, G, and B in the upper left section of FIG. **2**, in the image pickup device **500**, pixels corresponding to the three primary colors, that is, red (R), green (G), and blue (B), are arranged in a Bayer pattern except for the focus detection pixels. In FIG. **2**, pixels shown by hatched sections are the pixels that selectively receive blue light. In addition, pixels shown by gray sections represented by small dots are the pixels that selectively receive red light. In addition, pixels shown by blank sections are the pixels that selectively receive green light.

[0085] In FIG. **2**, the pixels labeled "UP" and "LW" in the center pixel column and the pixels labeled "RT" and "LT" in the center pixel row are the focus detection pixels. The pixels labeled "UP" selectively collect light that passes through an upper section of the image-pickup optical system **210**. Similarly, the pixels labeled "LW" selectively collect light that passes through a lower section of the image-pickup optical system **210**, and the pixels labeled "LT" and "RT" selectively collect light that passes through a left section and a right section, respectively, of the image-pickup optical system **210**. Although only 29 rows and 45 columns of pixels are shown in FIG. **2** for simplicity, about ten million pixels are arranged in practice.

[0086] FIG. **3** is an enlarged partial view of FIG. **2** illustrating the center pixel column in which the focus detection pixels are arranged and two pixel columns on the left side of the center pixel column. Referring to FIG. **3**, five focus detection pixels that collect light from the upper section of the image-pickup optical system **210** will be referred to as upper-section detection pixels **501**, **502**, **503**, **504**, and **505** in the explanations given below. Similarly, five focus detection pixels that collect light from the lower section of the image-pickup optical system **210** will be referred to as lower-section detection pixels **506**, **507**, **508**, **509**, and **510**.

Structure of Image Pickup Pixel in Image Pickup Device

[0087] FIG. **4**A is a schematic sectional view of an image pickup pixel corresponding to a green light component and FIG. **4**B is a graph showing the intensity of light incident on a photodiode **528** in the image pickup pixel at different areas of the photodiode **528**. As shown in FIG. **4**A, the image pickup pixel is structured such that a microlens **522**, a color filter **524**, element separation areas **526**, the photodiode **528**, and a silicon oxide film **530** are formed on a silicon substrate (not shown).

[0088] The microlens **522** collects light from the image-pickup optical system **210** on the photodiode **528**.

[0089] The color filter **524** selectively transmits green light.

[0090] The element separation areas **526** electrically separate the photodiode **528** from the surrounding area.

[0091] The silicon oxide film **530** causes light that passes through the microlens **522** and the color filter **524** to pass therethrough toward the photodiode **528**. The silicon oxide film **530** covers the entire area between the photodiode **528** and the color filter **524** and continuously extends over the pixels. The element separation areas **526** are formed by, for example, shallow trench isolation (STI) or local oxidation of silicon (LOCOS).

[0092] The photodiode **528** shown in FIG. **4**A is evenly divided into three areas, which are an area A **528***a* at the bottom, an area B **528***b* at the center, and an area C **528***c* at the top, in the column direction (vertical direction) of the pixel array shown in FIG. **2**. These areas are defined for explanation of the incident light intensity, and are not physically divided from each other but are formed integrally with each other in practice. This also applies to FIGS. **5**A, **7**A, **9**, and **20**, which will be described below. In FIG. **4**A, the circled "–" signs show free electrons that serve as signal charges. However, electron holes may instead be provided as the signal charges by inverting the conductivity types (N-type and P-type) of the photodiode **528** and the surrounding area.

[0093] In FIG. **4**A, the broken lines show an optical path of light Lα that passes through an upper section of the image-pickup optical system **210** and is incident on the microlens **522** (this light is hereinafter sometimes referred to simply as light Lα). In addition, the dotted chain lines show an optical path of light Lβ that passes through a lower section of the image-pickup optical system **210** and is incident on the microlens **522** (this light is hereinafter sometimes referred to simply as light Lβ). In addition, the solid lines with arrows show an optical path of light that is incident on the microlens **522** in a direction parallel to the optical axis thereof. The above-described relationship between the lines and the optical paths applies also to other figures. The optical axis direc-

tion of the microlens **522** is the same as the optical axis direction of the image-pickup optical system **210**.

[0094] The light that passes through the image-pickup optical system **210** is refracted by the microlens **522** disposed in each pixel and passes through the color filter **524**. Thus, the wavelength of the transmitted light is limited within a wavelength range around the wavelength of green light. Then, the light that passes through the color filter **524** passes through the silicon oxide film **530** and is incident on the photodiode **528**, which performs photoelectric conversion.

[0095] At this time, the light Lα from the upper section of the image-pickup optical system **210** is collected by the microlens **522** in the area A **528***a* at the lower section of the photodiode **528**. Similarly, the light Lβ from the lower section of the image-pickup optical system **210** is collected by the microlens **522** in the area C **528***c* at the upper section of the photodiode **528**. In addition, the light that is incident on the microlens **522** in a direction parallel to the optical axis thereof is collected in the area B **528***b*. Therefore, as shown in FIG. **4**B, the intensity of light that is incident on the photodiode **528** is substantially uniform over the three areas in the image pickup pixel.

[0096] The light Lα, the light Lβ, and the light incident on the microlens **522** in the direction parallel to the optical axis thereof may differ from each other. However, it can be assumed that the phase of light is substantially uniform if the light is emitted in a certain direction, passes through the image-pickup optical system **210**, and is incident on a small area with a diameter of, for example, several micrometers, which corresponds to the diameter of the microlens **522**. Therefore, the intensity of light that is emitted in a certain direction and passes through the microlens **522** is hardly reduced by interference in the optical path to the photodiode **528**.

Structure of Focus Detection Pixel in Image Pickup Device

[0097] FIG. **5**A is a schematic sectional view of a focus detection pixel that collects the light Lβ that passes through the lower section of the image-pickup optical system **210**. FIG. **5**B is a graph illustrating the intensity of light incident on the photodiode **528** in the focus detection pixel at different areas of the photodiode **528**.

[0098] The image pickup pixel and the focus detection pixel have the following difference. That is, the focus detection pixel includes a low-refractive-index filter **550** and a high-refractive-index filter **560** in the silicon oxide film **530**. The overall unit including the low-refractive-index filter **550** and the high-refractive-index filter **560** is positioned and shaped so as to be opposed to the entire body of the photodiode **528**. In this specification, the term "opposed" means the state in which two elements are separated from each other but overlap with each other when viewed in the optical axis direction of the microlens **522** (the same direction as the thickness direction of the silicon substrate (not shown) on which the pixels are formed and the optical axis direction of the image-pickup optical system **210**). The microlens **522** is disposed such that the optical axis thereof passes through the center of the photodiode **528** (center of the area B **528***b*).

[0099] The photodiode **528** is an example of a photoelectric converter described in the claims. In addition, one of the low-refractive-index filter **550** and the high-refractive-index filter **560** is an example of a first optical member described in the claims, and the other one is an example of a second optical member described in the claims. The microlens **522** is an example of a light collecting unit described in the claims. The color filter **524** is an example of an optical filter described in the claims. The optical axis of the microlens **522** is an example of "axis that passes through the center of the photoelectric converter in the optical axis direction" described in the claims.

[0100] The low-refractive-index filter **550** and the high-refractive-index filter **560** have the same thickness, and are arranged such that the thickness direction thereof is the same as the optical axis direction of the microlens **522**. In the focus detection pixel shown in FIG. **5**A, the area in which the low-refractive-index filter **550** is opposed to the photodiode **528** is larger than the area in which the high-refractive-index filter **560** is opposed to the photodiode **528**.

[0101] More specifically, the boundary between the low-refractive-index filter **550** and the high-refractive-index filter **560** is disposed at a position that satisfies the following condition. That is, the condition that all of the light Lβ passes through the low-refractive-index filter **550** without passing through the high-refractive-index filter **560** and the light Lα passes through both the low-refractive-index filter **550** and the high-refractive-index filter **560**. Therefore, the boundary between the low-refractive-index filter **550** and the high-refractive-index filter **560** is positioned below the optical axis of the microlens **522** (closer to the area A **528***a* of the photodiode **528**). Optical materials used to form the low-refractive-index filter **550** and the high-refractive-index filter **560** will be described below.

[0102] FIG. **6** is a diagram illustrating a phase difference between light that has passed through the low-refractive-index filter **550** and light that has passed through the high-refractive-index filter **560**. The three light waves shown in parts (a), (b), and (c) of FIG. **6** originally have the same phase, as is clear from the section surrounded by the dotted chain lines at the left side of FIG. **6**. Part (b) of FIG. **6** shows the case in which light constantly travels through a single medium for comparison.

[0103] As shown in part (a) of FIG. **6**, when light travels from a certain medium into a medium with a relatively low refractive index (low-refractive-index filter **550**), the wavelength of light relatively increases in the medium with a relatively low refractive index. Conversely, as shown in part (c) of FIG. **6**, when light travels from the certain medium into a medium with a relatively high refractive index (high-refractive-index filter **560**), the wavelength of light relatively decreases in the medium with a relatively high refractive index.

[0104] According to the present embodiment, when n**1** is a refractive index of the low-refractive-index filter **550**, n**2** is a refractive index of the high-refractive-index filter **560**, d is a thickness (nm) of the low-refractive-index filter **550** and the high-refractive-index filter **560**, and λ is a wavelength (nm) of light, the refractive indices n**1** and n**2** and the thickness d are selected by using the above-described characteristics so as to satisfy the following equation:

$$(n2-n1)\times d=\lambda\div 2 \quad (1)$$

[0105] Accordingly, in the case where light that passes through the microlens **522** is incident on the low-refractive-index filter **550** and the high-refractive-index filter **560** at the same phase, the phase of light that passes through the low-refractive-index filter **550** and the phase of light that passes through the high-refractive-index filter **560** are shifted from each other by 180°, as is clear from the comparison between

transmission waves shown in parts (a) and (c) in the section surrounded by the broken lines at the right side of FIG. **6**. If light waves having the same wavelength, the same amplitude, and phases that are shifted from each other by 180° interfere with each other, the intensity of light is reduced to zero.

[0106] FIGS. **5**A and **5**B will be further described on the basis of the above-described principle. Although the light Lα from the upper section of the image-pickup optical system **210** is shown by two broken lines in the figure, light in the area between the two broken lines is collected in practice. About half of the light Lα passes through the low-refractive-index filter **550**, and the remaining half passes through the high-refractive-index filter **560**. Therefore, the phase of the part of light Lα that passes through the low-refractive-index filter **550** and the phase of the part of light Lα that passes through the high-refractive-index filter **560** are shifted from each other by 180°. As a result, the intensity of light is reduced by interference by the time the light Lα is incident on the area A **528***a* of the photodiode **528**.

[0107] If the percentage of the part of light Lα that passes through the low-refractive-index filter **550** is equal to that of the part of light Lα that passes through the high-refractive-index filter **560**, the intensity of light that is incident on the area A **528***a* of the photodiode **528** is theoretically zero. However, in the focus detection pixel shown in FIG. **5**A, the boundary between the low-refractive-index filter **550** and the high-refractive-index filter **560** is positioned such that more than half of the light Lα passes through the high-refractive-index filter **560**. Therefore, the intensity of light that is incident on the area A **528***a* is not reduced to zero.

[0108] The light Lβ from the lower section of the image-pickup optical system **210** is refracted by the microlens **522** and passes through only the low-refractive-index filter **550** without passing through the high-refractive-index filter **560**. Therefore, no interference between light waves with different phases occurs, and the intensity of light incident on the area C **528***c* of the photodiode **528** is not reduced. As a result, in the focus detection pixel shown in FIG. **5**A, most of the light Lα from the upper section of the image-pickup optical system **210** is not collected, whereas the light Lβ from the lower section of the image-pickup optical system **210** is selectively collected. FIG. **5**B shows the intensity of light incident on each area of the photodiode **528**.

[0109] The interference of the light Lα occurs not only in the silicon oxide film **530** but also in the photodiode **528** since silicon, which is the material of the photodiode **528**, also transmits light. To absorb, for example, red light until the intensity thereof is reduced to half, it is necessary to cause the red light to reach a depth of 3 μm from the boundary between the silicon oxide film **530** and the photodiode **528**. Therefore, if the light Lα is red light, interference between the parts of light Lα having a phase difference of 180° sufficiently occurs in the photodiode **528**. In the case of blue light, which has a wavelength shorter than that of red light, the blue light is absorbed such that the intensity thereof is reduced to half by the time the blue light reaches a depth of 0.3 μm from the boundary between the silicon oxide film **530** and the photodiode **528**. Therefore, the degree of interference of the blue light in the photodiode **528** is not as large as that of the red light in the photodiode **528**.

[0110] FIG. **7**A is a schematic sectional view of a focus detection pixel that collects the light Lα from the upper section of the image-pickup optical system **210**. FIG. **7**B is a graph illustrating the intensity of light incident on the photodiode **528** in the focus detection pixel at different areas of the photodiode **528**. The difference between the focus detection pixel shown in FIG. **7**A and the focus detection pixel shown in FIG. **5**A which collects the light Lβ from the lower section of the image-pickup optical system **210** is only the sizes and the arrangement of the low-refractive-index filter **550** and the high-refractive-index filter **560**. Similar to the focus detection pixel shown in FIG. **5**A, the overall unit including the low-refractive-index filter **550** and the high-refractive-index filter **560** is positioned so as to be opposed to the entire body of the photodiode **528**, and the low-refractive-index filter **550** and the high-refractive-index filter **560** are arranged such that the thickness direction thereof is the same as the optical axis direction of the microlens **522**.

[0111] In the focus detection pixel shown in FIG. **7**A, the area in which the high-refractive-index filter **560** is opposed to the photodiode **528** is larger than the area in which the low-refractive-index filter **550** is opposed to the photodiode **528**. More specifically, the boundary between the low-refractive-index filter **550** and the high-refractive-index filter **560** is disposed at the position that satisfies the following condition.

[0112] That is, the condition that all of the light Lα passes through the high-refractive-index filter **560** without passing through the low-refractive-index filter **550** and the light Lβ passes through both the low-refractive-index filter **550** and the high-refractive-index filter **560**. Accordingly, the boundary between the low-refractive-index filter **550** and the high-refractive-index filter **560** is positioned above the optical axis of the microlens **522** in FIG. **7**A at a position symmetrical to that in the focus detection pixel shown in FIG. **5**A.

[0113] The light Lα from the upper section of the image-pickup optical system **210** passes through only the high-refractive-index filter **560**. Therefore, no interference between light waves with different phases occurs, and the intensity of light incident on the area A **528***a* of the photodiode **528** is not reduced. In contrast, about half of the light Lβ from the lower section of the image-pickup optical system **210** passes through the low-refractive-index filter **550**, and the remaining half passes through the high-refractive-index filter **560**. Therefore, the phase of the part of light Lβ that passes through the low-refractive-index filter **550** and the phase of the part of light Lβ that passes through the high-refractive-index filter **560** are shifted from each other by 180°. Accordingly, the intensity of light is reduced by interference by the time the light Lβ is incident on the area C **528***c* of the photodiode **528**. As a result, in the focus detection pixel shown in FIG. **7**A, the light Lα from the upper section of the image-pickup optical system **210** is selectively collected. FIG. **7**B shows the intensity of light incident on each area of the photodiode **528**.

[0114] One of the focus detection pixel that collects the light Lα shown in FIG. **7**A and the focus detection pixel that collects the light Lβ shown in FIG. **7**A is an example of a first-type pixel described in the claims, and the other one is an example of a second-type pixel described in the claims.

Principle of Focus Detection

[0115] FIGS. **8**A, **8**B, and **8**C are diagrams illustrating the intensities of light incident on the focus detection pixels. FIG. **8**A shows the case in which the focal plane is positioned closer to the image-pickup optical system **210** than the pixel array plane of the image pickup device **500**, that is, in the case of front focus. FIG. **8**B shows the in-focus state, and FIG. **8**C shows the case in which the focal plane is positioned closer to

the inside of the image pickup device **500** than the pixel array plane, that is, in the case of rear focus. For simplicity, the image-pickup optical system **210** is shown as a single lens in FIGS. **8**A to **8**C.

[0116] Each of the upper-section detection pixels **501** to **505** shown in FIGS. **8**A to **8**C, which are also denoted by the respective reference numerals in FIG. **3**, has the structure of the focus detection pixel shown in FIG. **7**A that collects the light Lα from the upper section of the image-pickup optical system **210**. Similarly, each of the lower-section detection pixels **506** to **510** shown in FIGS. **8**A to **8**C has the structure of the focus detection pixel shown in FIG. **5**A that collects the light Lβ from the lower section of the image-pickup optical system **210**. In each of FIGS. **8**A, **8**B, and **8**C, the left graph shows the intensities of light incident on the lower-section detection pixels **506** to **510** and the right graph shows the intensities of light incident on the upper-section detection pixels **501** to **505**.

[0117] In the following description, it is assumed that light emitted from a bright spot (not shown) on the optical axis of the image-pickup optical system **210** is incident on the image-pickup optical system **210**. In FIGS. **8**A to **8**C, only light rays incident in three directions, that is, the light Lα from the upper section of the image-pickup optical system **210**, the light Lβ from the lower section of the image-pickup optical system **210**, and light Ly that travels along the optical axis direction of the image-pickup optical system **210**, are shown for simplicity. The light Lα, the light Lβ, and the light Lγ that travel in respective directions are refracted by the image-pickup optical system **210** and are incident on the image pickup device **500**.

[0118] If the positions of the convex lens **212** and the concave lens **216** included in the image-pickup optical system **210** are adjusted such that the light is focused on the pixel array plane in the image pickup device **500**, the intensities of light incident on the upper-section detection pixels **501** to **505** and the lower-section detection pixels **506** to **510** are obtained as shown in FIG. **8**B.

[0119] The pixel between the upper-section detection pixel **503** and the lower-section detection pixel **508** is the pixel positioned at the center of the pixel array in the image pickup device **500**, that is, the pixel on the optical axis of the image-pickup optical system **210**. The light Lα, the light Lβ, and the light Lγ are refracted by the image-pickup optical system **210** and are collected at the pixel on the optical axis. Therefore, the incident light intensity is high in the upper-section detection pixel **503** and the lower-section detection pixel **508**, and decreases as the distance from the pixel on the optical axis increases. This is because although the light Lα, the light Lβ, and the light Ly are ideally collected at the optical axis, they slightly spread in practice owing to the aberrations of the image-pickup optical system **210**.

[0120] The light Lγ that travels in the optical axis direction is mainly collected at the pixel on the optical axis irrespective of whether the system is in the front focus state or the rear focus state.

[0121] In the case of front focus, the light Lα from the upper section of the image-pickup optical system **210** is mainly collected at the upper-section detection pixel **504** which is positioned below the pixel on the optical axis. Therefore, the incident light intensity is high at the upper-section detection pixel **504**. In addition, the light Lβ from the lower section of the image-pickup optical system **210** is mainly collected at the lower-section detection pixel **507** which is positioned above the pixel on the optical axis. Therefore, the incident light intensity high at the lower-section detection pixel **507**. Thus, in the case of front focus, the intensities of light incident on the upper-section detection pixels **501** to **505** and the lower-section detection pixels **506** to **510** are obtained as shown in FIG. **8**A.

[0122] In the case of rear focus, the light Lα from the upper section of the image-pickup optical system **210** is mainly collected at the lower-section detection pixel **507**. However, the lower-section detection pixel **507** does not collect the light Lα. Therefore, the incident light intensity is increased at the upper-section detection pixels **502** and **503**, which are close to the lower-section detection pixel **507**. Similarly, although the light Lβ from the lower section of the image-pickup optical system **210** is mainly collected at the upper-section detection pixel **504**, the upper-section detection pixel **504** does not collect the light Lβ. Therefore, the incident light intensity is increased at the lower-section detection pixels **508** and **509**, which are close to the upper-section detection pixel **504**. Accordingly, the intensities of light incident on the upper-section detection pixels **501** to **505** and the lower-section detection pixels **506** to **510** are obtained as shown in FIG. **8**C. Therefore, whether the system is in the front focus or the rear focus and the degree of defocus can be determined by detecting the positions of the pixels corresponding to the maximum incident light intensities among the upper-section detection pixels **501** to **505** and the lower-section detection pixels **506** to **510**.

Example of Focus Detection Operation

[0123] A focus detection operation will now be described with reference to the block diagram of the camera system **100** according to the present embodiment shown in FIG. **1**. Before the image pickup operation, the image pickup controller **422** and the focus controller **418** communicate with the lens controller **240** via electric contact units (not shown) to obtain information specific to the image pickup lens unit **200** and information of the current lens position and stop position.

[0124] While a moving image is being displayed on the liquid crystal display **402** (for example, while the user is waiting for the right moment to shoot), the image pickup device **500** is exposed to light and the following processes are performed.

[0125] That is, the image pickup controller **422** controls the timing generator **414** and performs an electronic shutter operation in which charges accumulated in the photodiode **528** in each of the pixels (focus detection pixels and image pickup pixels) included in the image pickup device **500** are output as charge signals at a predetermined time interval. The charge signals read from the respective pixels are subjected to the clamping process, the sensitivity correction process, etc., by the analog signal processor **412**, converged into digital signals by the A/D converter **410**, and are output to the system bus **426**.

[0126] The image-formation-position detector **420** extracts digital signals corresponding to the focus detection pixels from the digital signals corresponding to all of the pixels.

[0127] Next, the image-formation-position detector **420** detects the position of a pixel corresponding to the largest signal value in each of the group of focus detection pixels that collect the light Lα (pixels labeled "UP" in FIG. **2**) and the group of focus detection pixels that collect the light Lβ (pixels labeled "LW" in FIG. **2**). The image-formation-position detector **420** detects the position of the focal plane along the

optical axis of the image-pickup optical system **210** on the basis of the difference between the positions of the pixels corresponding to the largest signal values in the respective groups.

[0128] The position of the focal plane may also be detected by detecting the position of a pixel corresponding to the largest signal value in each of a group of focus detection pixels that collect light from the right section of the image-pickup optical system **210** and a group of focus detection pixels that collect light from the left section of the image-pickup optical system **210**. The focus detection pixels that collect light from the right section of the image-pickup optical system **210** are the pixels labeled "RT" in FIG. **2**, and the focus detection pixels that collect light from the left section of the image-pickup optical system **210** are the pixels labeled "LT" in FIG. **2**.

[0129] The focus controller **418** controls the lens-driving mechanism **230** using the lens controller **240** on the basis of the position of the focal plane determined by the image-formation-position detector **420**, and thereby adjusts the positions of the convex lens **212** and the concave lens **216** to in-focus positions.

[0130] The image processor **432** extracts digital signals corresponding to the image pickup pixels from the digital signals corresponding to all of the pixels and subjects the extracted digital signals to the color interpolation process and other processes, thereby producing image data. The image pickup controller **422** controls the liquid-crystal-display driving circuit **404** to cause the liquid crystal display **402** to display an image corresponding to the image data.

[0131] The charge signals output from the focus detection pixels that collect the light Lα and the charge signals output from the focus detection pixels that collect the light Lβ are examples of first charge signals described in the claims and second charge signals described in the claims, respectively, or vice versa. The signal charges output from the image pickup pixels in the image pickup device **500** are an example of third charge signals described in the claims.

Advantages of Present Embodiment

[0132] Thus, according to the first embodiment of the present invention, the low-refractive-index filter **550** and the high-refractive-index filter **560** are arranged next to each other so as to be opposed to the entire body of the photodiode **528** in each focus detection pixel. Accordingly, light that passes through the low-refractive-index filter **550** and light that passes through the high-refractive-index filter **560** after passing through the upper or lower section of the image-pickup optical system **210** have phases shifted from each other by 180°, and therefore interfere with each other so as to cancel each other.

[0133] Therefore, the focus detection pixels for detecting the light Lα and the focus detection pixels for detecting the light Lβ can be selectively formed simply by changing the position of the boundary between the low-refractive-index filter **550** and the high-refractive-index filter **560**.

[0134] Therefore, it is not necessary to provide two photodiodes in a single focus detection pixel. Accordingly, it is also not necessary to form a separation area between the photodiodes. Since the pixel area can be effectively used, the opening area of the photodiode in the focus detection pixel can be increased compared to that in the related art. This increases the maximum accumulation amount of charges in the photodiode **528** in each focus detection pixel and the sensitivity of the focus detection pixel with respect to light. As a result, the accuracy of focus detection can be increased.

[0135] Each focus detection pixel is caused to detect only light from one of the upper, lower, left, and right sections of the image-pickup optical system **210**. The four kinds of focus detection pixels corresponding to the four sections of the image-pickup optical system **210** are separately provided. Therefore, unlike the structure of the related art, it is not necessary to successively read charge signals from two photodiodes in each focus detection pixel. As a result, the speed of focus detection can be increased.

[0136] In addition, since each focus detection pixel has a simple structure in which the low-refractive-index filter **550** and the high-refractive-index filter **560** having different refractive indices are simply arranged, reduction in pixel size is not severely limited by the structure of the focus detection pixels.

Optical Materials of Low-Refractive-Index Filter and High-Refractive-Index Filter

[0137] Table 1 shows optical materials that can be used to manufacture the low-refractive-index filter **550** and the high-refractive-index filter **560**. The optical materials are listed in the descending order of refractive index with respect to green light. As a reference, the refractive index of silicon dioxide (SiO_2) that forms the silicon oxide film **530** is shown at the bottom row.

TABLE 1

	Refractive Index (n)			Extinction Coefficient (k)		
	Blue Light 450 nm	Green Light 550 nm	Red Light 650 nm	Blue Light 450 nm	Green Light 550 nm	Red Light 650 nm
Germanium	4.5	6.0	5.5	2.3	2.1	1
Silicon	4.69	4.08	3.85	0.151	0.03	0.017
Tungsten	3.31	3.48	3.76	2.47	2.72	2.95
Plasma Silicon Nitride	2.07	2.04	2.01	0.004	0	0.002
Aluminum	0.618	0.958	1.47	5.47	6.69	7.79
Copper	1.17	0.9	0.21	2.39	2.6	3.67
Reference: Silicon Dioxide	1.45	1.45	1.45	0.00	0.00	0.00

[0138] Although not listed in Table 1, siloxane is another optical material that can be used to form the low-refractive-index filter **550** or the high-refractive-index filter **560**. With regard to silicon, which is listed in Table 1, any one of single crystal silicon, amorphous silicon, and polysilicon may be used. Two optical materials having different refractive indices with which the film thickness d that satisfies Equation (1) can be set within a suitable range may be selected from Table 1 as the optical materials of the low-refractive-index filter **550** and the high-refractive-index filter **560**.

[0139] The "suitable range" mentioned above is a thickness range such that the low-refractive-index filter **550** and the high-refractive-index filter **560** can be reliably manufactured in the manufacturing process of the image pickup device **500** and such that the light transmittance of the low-refractive-index filter **550** and the high-refractive-index filter **560** is high enough to ensure the light sensitivity of the focus detection pixel. This is because the transmittance decreases as the film

thickness increases depending on the optical material. The transmittances of the optical materials with respect to light of each color can be determined on the basis of the extinction coefficient k shown in Table 1. This will be described in more detail below in a third embodiment.

[0140] Plasma silicon nitride (P—SiN) listed in Table 1 is simply an example of silicon nitride (Si_3N_4). Silicon nitride that can be used as a material of the low-refractive-index filter **550** or the high-refractive-index filter **560** is not limited to plasma silicon nitride.

Supplementary Explanation of Present Embodiment

[0141] According to the first embodiment, some of pixels of the three primary colors that are arranged in a Bayer pattern in the image pickup device **500** are used as the focus detection pixels. However, the present invention is not limited to this embodiment. The present invention may also be applied to the case in which the pixels are arranged in a so-called honeycomb pattern or the case in which pixels of complementary colors are arranged.

[0142] In the Bayer pattern, two pixels corresponding to the green light component are included in a unit of four pixels. Therefore, a focus detection pixel can be formed by changing a color filter included in one of the two pixels to a color filter that selectively transmits red or blue light. In such a case, focus detection can be accurately performed even when no green light is emitted from the object.

[0143] The area ratio between the low-refractive-index filter **550** and the high-refractive-index filter **560** will now be described. The focus detection pixel that collects the light Lα from the upper section of the image-pickup optical system **210** shown in FIG. **5**A will be considered as an example.

[0144] In this case, the ratio of the area in which the low-refractive-index filter **550** is opposed to the photodiode **528** to the area in which the high-refractive-index filter **560** is opposed to the photodiode **528** may be set to, for example, 3:1 when viewed in the optical axis direction of the microlens **522**.

[0145] In this case, in the lower half of the photodiode **528** (that is, in the lower half of the area B **528***b* and the entire section of the area A **528***a* in FIG. **5**A), the ratio between the areas in which the low-refractive-index filter **550** and the high-refractive-index filter **560** are opposed to the photodiode **528** is 1:1. Accordingly, half of the light that passes through the upper section of the image-pickup optical system **210** and that is incident on the focus detection pixel passes through the low-refractive-index filter **550**, and the remaining half passes through the high-refractive-index filter **560**. As a result, the light that passes through the low-refractive-index filter **550** and the light that passes through the high-refractive-index filter **560** cancel each other, and only the light from the lower section of the image-pickup optical system **210** can be collected. Thus, the intensity of light incident on the focus detection pixel can be easily adjusted simply by changing the position of the boundary between the low-refractive-index filter **550** and the high-refractive-index filter **560** or the area ratio between the low-refractive-index filter **550** and the high-refractive-index filter **560**.

2. Second Embodiment

[0146] Camera systems according to second to seventh embodiments described below differ from the camera system according to the first embodiment only in the structures of the focus detection pixels included in the image pickup device. Therefore, only the difference from the first embodiment will be described.

[0147] FIG. **9** is a schematic sectional view of a focus detection pixel in an image pickup device included in the camera system according to the second embodiment. The focus detection pixel collets the light Lβ from the lower section of the image-pickup optical system **210**. Although not shown in the figure, the focus detection pixel that collects the light Lα from the upper section of the image-pickup optical system **210** is structured such that the low-refractive-index filter **550** and the high-refractive-index filter **560** are arranged symmetrically to those shown in FIG. **9** with respect to the optical axis of the microlens **522**.

[0148] As is clear from the comparison between FIGS. **9** and **5**A, the second embodiment differs from the first embodiment in that the color filter **524** is removed. In this case, light with various wavelengths is incident on the focus detection pixel. The refractive indices of the two kinds of optical materials that form the low-refractive-index filter **550** and the high-refractive-index filter **560** vary in accordance with the wavelength. In other words, as the wavelength range of the incident light increases, it becomes more difficult to accurately set the phase difference between the light that passes through the low-refractive-index filter **550** and the light that passes through the high-refractive-index filter **560** to 180°. Therefore, preferably, the color filter is provided as in the first embodiment. However, the effects similar to those of the first embodiment can also be obtained by the structure of the present embodiment.

3. Third Embodiment

Structure of Focus Detection Pixel

[0149] Although both the low-refractive-index filter **550** and the high-refractive-index filter **560** are used in the first and second embodiments, this is not necessary. If the phase difference between light that passes through the high-refractive-index filter **560** and light that does not pass through the high-refractive-index filter **560** can be set to 180° on the basis of the difference in refractive index between the high-refractive-index filter **560** and the silicon oxide film **530** surrounding the high-refractive-index filter **560**, the low-refractive-index filter **550** can be omitted. Based on the similar principle, the structure may also be such that the high-refractive-index filter **560** is omitted and the phase difference is set to 180° using the low-refractive-index filter **550**.

[0150] However, as is clear from Table 1, optical materials that are generally used in semiconductors and that have a relatively low refractive index do not have a large difference in refractive index from silicon dioxide, which forms the interlayer insulation film. In addition, many of optical materials having a large difference in refractive index from silicon dioxide have high extinction coefficients. Therefore, light incident on such an optical material does not reliably reach the photodiode **528**. To ensure the light sensitivity of the focus detection pixel, an optical material having a low extinction coefficient is preferably selected.

[0151] FIGS. **10**A and **10**B are schematic sectional views illustrating focus detection pixels that collect the light Lα from the upper section of the image-pickup optical system **210** in the image pickup device included in the camera system

according to the third embodiment of the present invention. Either of the structures shown in FIGS. **10**A and **10**B may be applied.

[0152] FIG. **10**A shows the structure in which the area in which the high-refractive-index filter **560** is opposed to the photodiode **528** is larger than half of the opening area of the photodiode **528** so that all of the light Lα from the upper section of the image-pickup optical system **210** passes through the high-refractive-index filter **560**. FIG. **10**B shows the structure in which the area in which the high-refractive-index filter **560** is opposed to the photodiode **528** is less than half of the opening area of the photodiode **528** so that none of the light Lα from the upper section of the image-pickup optical system **210** passes through the high-refractive-index filter **560**.

[0153] In either of the above-described structures, only a part of the light Lβ from the lower section of the image-pickup optical system **210** passes through the high-refractive-index filter **560**. In addition, in either of the above-described structures, an end of the high-refractive-index filter **560** close to the area B **528***b* of the photodiode **528** is positioned above the optical axis of the microlens **522**.

[0154] The optical axis of the microlens **522** according to the present embodiment is an example of "axis that passes through the center of the photoelectric converter in the optical axis direction of the image-pickup optical system" described in the claims.

[0155] FIGS. **11**A and **11**B are schematic sectional views illustrating focus detection pixels that collect the light Lβ from the lower section of the image-pickup optical system **210** in the image pickup device included in the camera system according to the third embodiment of the present invention. Either of the structures shown in FIGS. **11**A and **11**B may be applied.

[0156] FIG. **11**A shows the structure in which the area in which the high-refractive-index filter **560** is opposed to the photodiode **528** is less than half of the opening area of the photodiode **528** so that none of the light Lβ from the lower section of the image-pickup optical system **210** passes through the high-refractive-index filter **560**. FIG. **11**B shows the structure in which the area in which the high-refractive-index filter **560** is opposed to the photodiode **528** is larger than half of the opening area of the photodiode **528** so that all of the light Lβ from the lower section of the image-pickup optical system **210** passes through the high-refractive-index filter **560**.

[0157] In either of the above-described structures, only a part of the light Lα from the upper section of the image-pickup optical system **210** passes through the high-refractive-index filter **560**. In addition, in either of the above-described structures, an end of the high-refractive-index filter **560** close to the area B **528***b* of the photodiode **528** is positioned below the optical axis of the microlens **522**.

Optical Material of High-Refractive-Index Filter and Transmittance

[0158] In the case where the high-refractive-index filter **560** included in each of the focus detection pixels shown in FIGS. **10**A, **10**B, **11**A, and **11**B is made of plasma silicon nitride, the film thickness d at which the phase difference between light that passes through the high-refractive-index filter **560** and light that does not pass through the high-refractive-index filter **560** can be set to 180° can be obtained as follows. That is, the film thickness d can be obtained by substituting the refractive index of plasma silicon nitride, the refractive index of the silicon dioxide that forms the silicon oxide film **530** surrounding the high-refractive-index filter **560**, and the wavelength of green light (550 nm) into Equation (1) as follows:

$$d = \lambda/\{(n2 - n1) \times 2\}$$
$$= 550/\{(2.04 - 1.45) \times 2\} = 466\text{nm}$$

[0159] As shown in Table 1, the extinction coefficient k of plasma silicon nitride with respect to green light is substantially 0. Therefore, substantially all of the light that is incident on the high-refractive-index filter **560** passes therethrough and reaches the photodiode **528**. Thus, the light sensitivity of the focus detection pixel is not reduced by the presence of the high-refractive-index filter **560** and no practical problem is caused by the high-refractive-index filter **560**.

[0160] As another example, the transmittance obtained when the high-refractive-index filter **560** is made of silicon will be described. In this case, the film thickness d at which the phase difference can be set to 180° for green light is obtained by a similar method as follows:

$$d = \lambda/\{(n2 - n1) \times 2\}$$
$$= 550/\{(4.08 - 1.45) \times 2\} = 104.5\text{nm}$$

[0161] As shown in Table 1, the extinction coefficient k of silicon with respect to green light is 0.03. Therefore, in the case where the film thickness d of the high-refractive-index filter **560** is set to 104.5 nm as described above, the transmittance (reflection is ignored) of the high-refractive-index filter **560** for green light can be obtained as follows:

$$I/Io = \exp\{-4 \times \pi \times k \times (d/\lambda)\}$$
$$= \exp\{-4 \times \pi \times 0.03 \times (104.5/550)\} = 0.93$$

where Io is the incident light intensity and I is the transmitted light intensity.

[0162] Similarly, the film thickness d at which the phase difference can be set to 180° for blue light (wavelength 450 nm, which is hereinafter omitted) and the transmittance (reflection is ignored) for blue light corresponding to the film thickness d are obtained as follows:

$$d = 450/\{(4.69 - 1.45) \times 2\} = 69.4 \text{ nm}$$

$$I/Io = \exp\{-4 \times \pi \times 0.151 \times (69.4/450)\} = 0.746$$

[0163] Similarly, the film thickness d at which the phase difference can be set to 180° for red light (wavelength 650 nm, which is hereinafter omitted) and the transmittance (reflection is ignored) for red light corresponding to the film thickness d are obtained as follows:

$$d = 650/\{(3.85 - 1.45) \times 2\} = 135.4 \text{ nm}$$

$$I/Io = \exp\{-4 \times \pi \times 0.017 \times (135.4/650)\} = 0.956$$

[0164] Therefore, if green light, blue light, or red light is incident on the high-refractive-index filter **560** having the

above-described corresponding thickness d, 93% of the green light, 74.6% of the blue light, or 95.6% of the red light, respectively, passes through the high-refractive-index filter **560** and reaches the photodiode **528**. If the transmittance is around any of the above-described values, the light sensitivity of the focus detection pixel is not reduced by the presence of the high-refractive-index filter **560** and no practical problem is caused by the high-refractive-index filter **560**.

Modification of Third Embodiment

[0165] In the case where silicon is used as the material of the high-refractive-index filter **560**, there is a risk that the reflectance will be increased at the silicon surface and the amount of light that reaches the photodiode **528** will be reduced accordingly. In such a case, a high-refractive-index filter **561** may be formed by stacking a plurality of films made of optical materials, for example, by forming an antireflection film **563** on the silicon surface to reduce the reflectance. Such a modification of the third embodiment will be described with reference to FIGS. **12**A and **12**B.

[0166] FIG. **12**A is a schematic sectional view of a focus detection pixel including the high-refractive-index filter **561** having a layered structure including the above-described antireflection film **563**. The focus detection pixel collects the light Lα from the upper section of the image-pickup optical system **210**. The focus detection pixel has the same structure as that shown in FIG. **10**A except that the antireflection film **563** is provided on the surface of the high-refractive-index filter **561**.

[0167] As shown in FIG. **12**A, the high-refractive-index filter **561** includes a high-refractive-index filter layer **562** and the antireflection film **563** provided on the surface of the high-refractive-index filter layer **562** facing the microlens **522**. The high-refractive-index filter layer **562** is shown by lines inclined upward toward the right, and the antireflection film **563** is shown by a gray area represented by small dots.

[0168] The high-refractive-index filter layer **562** is provided to set the phase difference between light that passes therethrough and light that does not pass therethrough but passes through the silicon oxide film **530** surrounding the high-refractive-index filter layer **562** to 180°. In other words, the refractive index of the optical material that forms the high-refractive-index filter layer **562** and the film thickness d of the high-refractive-index filter layer **562** satisfy Equation (1). The antireflection film **563** may be made of, for example, silicon nitride (Si_3N_4). The reflectance of the silicon nitride (Si_3N_4) film varies in accordance with the thickness thereof and the wavelength of incident light. Therefore, the film thickness d is preferably set such that the reflectance can be reduced in accordance with the wavelength of the incident light. The antireflection film **563** is an example of a film made of an optical material described in the claims. The silicon oxide film **530** is an example of an optical layer described in the claims.

[0169] FIG. **12**B is a schematic sectional view of a focus detection pixel that collects the light Lβ from the lower section of the image-pickup optical system **210** in the above-described structure including the antireflection film **563**. The difference of the focus detection pixel shown in FIG. **12**B from that shown in FIG. **12**A is that the area in which the high-refractive-index filter **561** is opposed to the photodiode **528** is smaller than half of the opening area of the photodiode **528**. More specifically, in the focus detection pixel shown in FIG. **12**B, none of the light Lβ from the lower section of the image-pickup optical system **210** passes through the high-refractive-index filter **561**, and only a part of the light Lα from the upper section of the image-pickup optical system **210** passes through the high-refractive-index filter **561**.

[0170] The third embodiment also provides the effects similar to those of the first embodiment. Although no color filter is provided in the present embodiment, a color filter may also be provided to limit the wavelength range of the incident light, as in the first embodiment.

[0171] The antireflection film **563** may also be applied to the case in which both the low-refractive-index filter **550** and the high-refractive-index filter **560** are provided as in the first embodiment, and FIGS. **13**A and **13**B show an example of such a structure. FIG. **13**A is a schematic sectional view of a focus detection pixel that collects the light Lα from the upper section of the image-pickup optical system **210**. FIG. **13**B is a schematic sectional view of a focus detection pixel that collects the light Lβ from the lower section of the image-pickup optical system **210**. The focus detection pixels shown in FIGS. **13**A and **13**B differ from those of the first embodiment shown in FIGS. **5**A and **7**A only in the structures of a low-refractive-index filter **551** and a high-refractive-index filter **564**.

[0172] Referring to FIG. **13**A, the low-refractive-index filter **551** includes a low-refractive-index filter layer **552** and an antireflection film **553** provided on the surface of the low-refractive-index filter layer **552** facing the microlens **522**. In FIG. **13**A, the low-refractive-index filter layer **552** is shown by lines inclined downward toward the right, and the antireflection film **553** is shown by a blank area. The high-refractive-index filter **564** includes a high-refractive-index filter layer **565** and an antireflection film **567** provided on the surface of the high-refractive-index filter layer **565** facing the microlens **522**. In FIG. **13**A, the high-refractive-index filter layer **565** is shown by lines inclined upward toward the right, and the antireflection film **567** is shown by a gray area represented by small dots.

[0173] The low-refractive-index filter **551** and the high-refractive-index filter **564** are arranged next to each other such that no step is formed between the surfaces of the antireflection films **553** and **567** that face the microlens **522**. The low-refractive-index filter layer **552** and the high-refractive-index filter layer **565** have the same thickness, and the antireflection film **553** and the antireflection film **567** also have the same thickness. Thus, the low-refractive-index filter layer **552** and the high-refractive-index filter layer **565** are disposed such that no step is formed between the surfaces thereof that face the photodiode **528**. This is because if there is a step between the surfaces, the optical path changes at the step and it may become difficult to reliably provide the function of collecting only the light Lα from the upper section of the image-pickup optical system **210**.

[0174] The optical materials and the thickness of the low-refractive-index filter layer **552** and the high-refractive-index filter layer **565** are determined such that the phase difference between the light that passes through the low-refractive-index filter layer **552** and the light that passes through the high-refractive-index filter layer **565** is set to 180° on the basis of Equation (1). Similar to the above-described example, the antireflection films **553** and **567** may be made of, for example, silicon nitride (Si_3N_4). The color filter **524** included in the focus detection pixel shown in FIG. **13**A selectively transmits green light. Therefore, the thickness of the antireflection films

553 and **567** is preferably set such that the reflectance for the wavelength range around the wavelength of green light can be reduced.

[0175] The positions of the low-refractive-index filter **551** and the high-refractive-index filter **564** with respect to the optical axis of the microlens **522** and the photodiode **528** are similar to those described in the first embodiment. More specifically, the boundary between the low-refractive-index filter **551** and the high-refractive-index filter **564** is positioned above the optical axis of the microlens **522** in FIG. **13**A.

[0176] Conversely, the boundary between the low-refractive-index filter **551** and the high-refractive-index filter **564** is positioned below the optical axis of the microlens **522**, as shown in FIG. **13**B, to form the focus detection pixel that collects the light Lβ from the lower section of the image-pickup optical system **210**.

4. Fourth Embodiment

[0177] FIG. **14** is a schematic sectional view of a focus detection pixel in an image pickup device included in a camera system according to a fourth embodiment of the present invention. The focus detection pixel shown in FIG. **14** collects the light Lα from the upper section of the image-pickup optical system **210**. The fourth embodiment differs from the third embodiment only in that a laminated filter **570** is provided in place of the high-refractive-index filter **560**.

[0178] The laminated filter **570** is formed by alternately stacking layers made of two kinds of optical materials having different refractive indices such that boundary surfaces between the layers are parallel to the optical axis of the microlens **522**, that is, such that the normal line of lamination surfaces is perpendicular to the optical axis direction of the microlens **522**.

[0179] The laminated filter **570** is positioned such that the area in which the laminated filter **570** is opposed to the area B **528***b* of the photodiode **528** is minimized when viewed in the optical axis direction of the microlens **522** under the condition that all of the light Lβ from the lower section of the image-pickup optical system **210** passes through the laminated filter **570**. Most part of the light Lβ from the lower section of the image-pickup optical system **210** is incident on the laminated filter **570** in a direction inclined with respect to the optical axis of the microlens **522**. The incident light passes through both of the layers made of an optical material having a high refractive index and the layers made of an optical material having a low refractive index in the laminated filter **570**.

[0180] Accordingly, a phase difference is caused in the light Lβ from the lower section of the image-pickup optical system **210** as the light Lβ passes through the layers having different refractive indices in the laminated filter **570**, and is reduced by interference by the time the light Lβ reaches the photodiode **528**. Therefore, when the overall thickness of the laminated filter **570** (thickness in the optical axis direction of the microlens **522**) is d, the optical materials of the two kinds of layers are preferably selected so as to satisfy Equation (1). In the present embodiment, owing to the above-described structure, the phase difference in the transmitted light is close to 180°. Therefore, the light Lβ from the lower section of the image-pickup optical system **210** can be reliably reduced.

[0181] The light Lα from the upper section of the image-pickup optical system **210** does not pass through the laminated filter **570** except for an area around the optical axis of the microlens **522**. Accordingly, the light Lα is mainly collected at the area C **528***c* of the photodiode **528**. Thus, the focus detection pixel shown in FIG. **14** serves to collect the light Lα from the upper section of the image-pickup optical system **210**.

[0182] Although not shown in the figure, a focus detection pixel that collects the light Lβ from the lower section of the image-pickup optical system **210** is structured such that the laminated filter **570** is arranged symmetrically to that in the pixel structure shown in FIG. **14** with respect to the optical axis of the microlens **522**. In other words, the laminated filter **570** is disposed such that the laminated filter **570** is opposed to the lower half of the area B **528***b* and the area A **528***a* of the photodiode **528**. The present embodiment also provides the effects similar to those of the first embodiment.

[0183] Although no color filter is provided in the present embodiment, a color filter may also be provided to limit the wavelength range of the incident light, as in the first embodiment.

[0184] In addition, although the laminated filter **570** is composed of layers made of two kinds of optical materials having different refractive indices, the laminated filter **570** may instead be composed of layers made of three or more kinds of optical materials having different refractive indices as long as a phase difference of about 180° can be caused in the transmitted light.

[0185] The laminated filter **570** is an example of an optical member described in the claims.

5. Fifth Embodiment

[0186] FIG. **15** is a schematic sectional view of a focus detection pixel in an image pickup device included in a camera system according to a fifth embodiment of the present invention. The fifth embodiment differs from the second embodiment in that a low-refractive-index filter **556** and a high-refractive-index filter **566** are disposed at a side of the microlens **522** opposite the silicon oxide film **530**. Since the low-refractive-index filter **556** and the high-refractive-index filter **566** are disposed closer to the image-pickup optical system **210** than the microlens **522** having a light collecting function, the sizes of the low-refractive-index filter **556** and the high-refractive-index filter **566** are preferably larger than those in the second embodiment.

[0187] The focus detection pixel shown in FIG. **15** collects the light Lβ from the lower section of the image-pickup optical system **210**. The boundary between the low-refractive-index filter **556** and the high-refractive-index filter **566** is above the optical axis of the microlens **522**. Although not shown in the figure, a focus detection pixel that collects the light Lα from the upper section of the image-pickup optical system **210** is structured such that the low-refractive-index filter **556** and the high-refractive-index filter **566** are arranged symmetrically to those in the pixel structure shown in FIG. **15** with respect to the optical axis of the microlens **522**.

[0188] The present embodiment also provides the effects similar to those of the first embodiment. Although no color filter is provided in the present embodiment, a color filter may also be provided to limit the wavelength range of the incident light, as in the first embodiment.

6. Sixth Embodiment

[0189] FIG. **16** is a schematic sectional view of a focus detection pixel in an image pickup device included in a camera system according to a sixth embodiment of the present

invention. The sixth embodiment differs from the first embodiment shown in FIG. **7**A in that the color filter **524** is removed and a waveguide member **580** is provided.

[0190] The waveguide member **580** is disposed between the unit including the low-refractive-index filter **550** and the high-refractive-index filter **560** and the photodiode **528**. Although only the sectional view of the waveguide member **580** is shown in FIG. **16**, the waveguide member **580** actually has a hollow shape in which the opening diameter thereof is large at the microlens-**522** side and small at the photodiode-**528** side. The opening area of the waveguide member **580** at the microlens-**522** side is preferably set such that all of light from the microlens **522** enters the waveguide member **580**, as in the present embodiment. In such a case, the light sensitivity of the focus detection pixel can be increased. The waveguide member **580** has an inner surface made of an optical material having high reflectance, and guides the light that passes through the low-refractive-index filter **550** and the high-refractive-index filter **560** mainly toward the area B **528***b* of the photodiode **528** by reflection.

[0191] The boundary between the low-refractive-index filter **550** and the high-refractive-index filter **560** is positioned such that all of the light Lα passes through the high-refractive-index filter **560** without passing through the low-refractive-index filter **550** and the light Lβ passes through both the low-refractive-index filter **550** and the high-refractive-index filter **560**.

[0192] The light Lα from the upper section of the image-pickup optical system **210** passes through only the high-refractive-index filter **560**, so that no phase difference occurs in the transmitted light. Therefore, the light Lα is reflected by the inner surface of the waveguide member **580** and reaches the area B **528***b* of the photodiode **528** without being reduced by interference.

[0193] The light Lβ passes through both the low-refractive-index filter **550** and the high-refractive-index filter **560**, so that a phase difference of 180° occurs. The light Lβ is reflected several times by the inner surface of the waveguide member **580** before reaching the photodiode **528**. Therefore, the optical path to the photodiode **528** is longer than that in the first embodiment. Since the optical path is longer, the amount by which the light Lβ is reduced by interference is larger than that in the first embodiment. Therefore, substantially none of the light Lβ from the lower section of the image-pickup optical system **210** reaches the photodiode **528**. As a result, the focus detection pixel shown in FIG. **16** collects the light Lα from the upper section of the image-pickup optical system **210**.

[0194] Although not shown in the figure, a focus detection pixel that collects the light Lβ from the lower section of the image-pickup optical system **210** is structured such that the low-refractive-index filter **550** and the high-refractive-index filter **560** are arranged symmetrically to those in the pixel structure shown in FIG. **16** with respect to the optical axis of the microlens **522**.

[0195] The present embodiment also provides the effects similar to those of the first embodiment.

[0196] Although no color filter is provided in the present embodiment, a color filter may also be provided to limit the wavelength range of the incident light, as in the first embodiment.

[0197] The technical idea of the present embodiment is to increase the optical path of the light from the microlens **522** by reflection by the inner surface of the waveguide member **580**, so that the interference of the light having a phase difference can be increased. Therefore, the waveguide member **580** is preferably shaped such that the opening diameter thereof is large at the microlens-**522** side and small at the photodiode-**528** side. In such a case, the light that passes through the microlens **522** is collected at a local area in the photodiode **528**. This area is not limited to the area B **528***b* as in the present embodiment, and may instead be the area A **528***a* or the area C **528***c*.

7. Seventh Embodiment

[0198] FIG. **17** is a schematic sectional view of a focus detection pixel in an image pickup device included in a camera system according to a seventh embodiment of the present invention. The seventh embodiment differs from the first embodiment in that an intermediate-refractive-index waveguide **590** and a high-refractive-index waveguide **592** are provided in place of the low-refractive-index filter **550** and the high-refractive-index filter **560**, and the color filter **524** is removed.

[0199] The intermediate-refractive-index waveguide **590** and the high-refractive-index waveguide **592** have substantially the same shape with a trapezoidal cross section and are in close contact with each other. The boundary between the intermediate-refractive-index waveguide **590** and the high-refractive-index waveguide **592** is positioned on the optical axis of the microlens **522**. The silicon oxide film **530** is provided between the intermediate-refractive-index waveguide **590** and the photodiode **528**, but is not provided between the high-refractive-index waveguide **592** and the photodiode **528**.

[0200] The cross section of each of the intermediate-refractive-index waveguide **590** and the high-refractive-index waveguide **592** is large at the microlens-**522** side and small at the photodiode-**528** side. The cross section of each of the intermediate-refractive-index waveguide **590** and the high-refractive-index waveguide **592** at the microlens-**522** side is preferably large enough to allow all of light from the microlens **522** to enter the intermediate-refractive-index waveguide **590** or the high-refractive-index waveguide **592**, as in the present embodiment. In such a case, the light sensitivity of the focus detection pixel can be increased.

[0201] The high-refractive-index waveguide **592** guides the light Lα from the upper section of the image-pickup optical system **210** mainly toward the area B **528***b* of the photodiode **528** by internal reflection. In general, when light travels from a medium with a low refractive index to a medium with a high refractive index, a part of the light that is incident on the medium with a high refractive index is larger than a part of the light that is reflected by the boundary between the two media. Conversely, when light travels from a medium with a high refractive index to a medium with a low refractive index, a part of the light that is reflected by the boundary between the two media is larger than a part of the light that is incident on the medium with a low refractive index. Accordingly, in the present embodiment, the refractive index is higher in the order of silicon that forms the photodiode **528**, the high-refractive-index waveguide **592**, the intermediate-refractive-index waveguide **590**, and the silicon oxide film **530**.

[0202] Therefore, in FIG. **17**, the light Lα from the upper section of the image-pickup optical system **210** is incident on the high-refractive-index waveguide **592** from the silicon

oxide film **530** and reaches the photodiode **528** substantially without leaking to the outside of the high-refractive-index waveguide **592**.

[0203] This is because the refractive index of the high-refractive-index waveguide **592** is higher than those of the silicon oxide film **530** and the intermediate-refractive-index waveguide **590** and therefore the light Lα is repeatedly reflected by the boundary between the high-refractive-index waveguide **592** and the silicon oxide film **530** and the boundary between the high-refractive-index waveguide **592** and the intermediate-refractive-index waveguide **590**.

[0204] The light Lβ from the lower section of the image-pickup optical system **210** is incident on the intermediate-refractive-index waveguide **590** from the silicon oxide film **530**, which has a relatively low refractive index. Then, the light Lβ is reflected by the boundary between the silicon oxide film **530** and the intermediate-refractive-index waveguide **590** and is incident on the high-refractive-index waveguide **592**. Then, the light Lα that is directly incident on the high-refractive-index waveguide **592** from the silicon oxide film **530** and the light Lβ that is incident on the high-refractive-index waveguide **592** after passing through the silicon oxide film **530** and the intermediate-refractive-index waveguide **590** reduce each other, owing to the interference caused by the phase difference therebetween.

[0205] In this structure, first, a part of the light Lβ from the lower section of the image-pickup optical system **210** that is incident on the intermediate-refractive-index waveguide **590** from the silicon oxide film **530** is reflected by the boundary between the intermediate-refractive-index waveguide **590** and the high-refractive-index waveguide **592** and is not incident on the high-refractive-index waveguide **592**. Second, the light Lβ that is incident on the high-refractive-index waveguide **592** after passing through the silicon oxide film **530** and the intermediate-refractive-index waveguide **590** has a longer optical path compared to the light Lα that is directly incident on the high-refractive-index waveguide **592** from the silicon oxide film **530**, and therefore the intensity of the light Lβ is reduced by a larger amount.

[0206] Considering the above-described two points, the amount and intensity of the light Lα that is directly incident on the high-refractive-index waveguide **592** from the silicon oxide film **530** are larger than those of the light Lβ that is incident on the high-refractive-index waveguide **592** after passing through the intermediate-refractive-index waveguide **590**. Therefore, the light Lβ is reduced by interference and does not reach the photodiode **528**, and only the light Lα reaches the photodiode **528**. As a result, the focus detection pixel shown in FIG. **17** selectively collects the light Lα from the upper section of the image-pickup optical system **210**.

[0207] Although not shown in the figure, a focus detection pixel that collects the light Lβ from the lower section of the image-pickup optical system **210** is structured such that the intermediate-refractive-index waveguide **590** and the high-refractive-index waveguide **592** are arranged symmetrically to those in the pixel structure shown in FIG. **17** with respect to the optical axis of the microlens **522**.

[0208] The present embodiment also provides the effects similar to those of the first embodiment.

[0209] The intermediate-refractive-index waveguide **590** is an example of a first waveguide described in the claims. The high-refractive-index waveguide **592** is an example of a second waveguide described in the claims. The silicon oxide film **530** is an example of an optical layer described in the claims.

[0210] With regard to the optical materials of the intermediate-refractive-index waveguide **590** and the high-refractive-index waveguide **592**, two types of materials having refractive indices between those of silicon and silicon dioxide may be selected from the materials shown in Table 1.

[0211] Although the structure in which the high-refractive-index waveguide **592** and the photodiode **528** are in close contact with each other is described in the present embodiment, the present invention is not limited to this embodiment. The silicon oxide film **530** may be interposed between the high-refractive-index waveguide **592** and the photodiode **528** as long as the thickness of the silicon oxide film **530** is small enough and no practical problem is caused by the reduction in the light transmittance from the high-refractive-index waveguide **592** to the photodiode **528**.

[0212] Although no color filter is provided in the present embodiment, a color filter may also be provided to limit the wavelength range of the incident light, as in the first embodiment.

8. Modifications of Arrangement of Refractive Filters in Focus Detection Pixels According to Embodiments of the Present Invention

[0213] FIGS. **18** to **21** are schematic sectional views illustrating four examples of arrangement of the low-refractive-index filter **550** and the high-refractive-index filter **560** in four focus detection pixels that collect light from the upper and lower sections of the image-pickup optical system **210** according to the embodiments of the present invention. In each of FIGS. **18** to **21**, the first and third pixels from the top are the focus detection pixels that collect the light Lα from the upper section of the image-pickup optical system **210**. In addition, the second and fourth pixels from the top are the focus detection pixels that collect the light Lβ from the lower section of the image-pickup optical system **210**.

[0214] In the embodiments of the present invention, two types of pixels structures may be used in the focus detection pixels that collect the light Lα from the upper section of the image-pickup optical system **210**. That is, the pixel structure in which the high-refractive-index filter **560** is disposed on the lower side of the optical axis (FIGS. **18** and **19**) and the pixel structure in which the low-refractive-index filter **550** is disposed on the lower side of the optical axis (FIGS. **20** and **21**). This is because either of the low-refractive-index filter **550** and the high-refractive-index filter **560** may be disposed on the lower side as long as the boundary therebetween is positioned above the optical axis of the microlens **522**.

[0215] Similarly, two types of pixels structures may be used in the focus detection pixels that collect the light Lβ from the lower section of the image-pickup optical system **210**. That is, the pixel structure in which the low-refractive-index filter **550** is disposed on the upper side of the optical axis (FIGS. **18** and **20**) and the pixel structure in which the high-refractive-index filter **560** is disposed on the upper side of the optical axis (FIGS. **19** and **21**). This is because either of the low-refractive-index filter **550** and the high-refractive-index filter **560** may be disposed on the upper side as long as the boundary therebetween is positioned below the optical axis of the microlens **522**.

[0216] Therefore, the number of combinations of the focus detection pixels that collect the light Lα from the upper section of the image-pickup optical system **210** and the focus detection pixels that collect the light Lβ from the lower sec-

tion of the image-pickup optical system **210** can be calculated as 2×2, that is, 4. FIGS. **18** to **21** show the four kinds of arrangements.

[0217] The arrangement of the low-refractive-index filter **550** and the high-refractive-index filter **560** are preferably determined in consideration of the optical characteristics, such as the extinction coefficient. More specifically, to increase the light sensitivity of the focus detection pixels, one of the low-refractive-index filter **550** and the high-refractive-index filter **560** that is made of an optical material having a lower extinction coefficient is preferably formed so as to be opposed to the photodiode **528** over a larger area.

[0218] In addition, the light sensitivity is preferably uniform over the focus detection pixels. Therefore, it is preferable that one of the low-refractive-index filter **550** and the high-refractive-index filter **560** is formed so as to be opposed to the photodiode **528** over a larger area in all of the focus detection pixels that collect the light from the upper and lower sections of the image-pickup optical system **210**. From this viewpoint, the arrangement shown in FIG. **19** in which the high-refractive-index filter **560** is formed so as to be opposed to the photodiode **528** over a larger area in all of the focus detection pixels is more preferable than the arrangement shown in FIG. **18**. Similarly, the arrangement shown in FIG. **20** in which the low-refractive-index filter **550** is formed so as to be opposed to the photodiode **528** over a larger area in all of the focus detection pixels is more preferable than the arrangement shown in FIG. **21**.

9. Modification of Arrangement of Color Filters According to Embodiments of the Present Invention

[0219] FIG. **22** is a schematic sectional view of four pixels that collect light from the upper and lower sections of the image-pickup optical system **210** according to a modification of the embodiments of the present invention. In FIG. **22**, a color filter **205** selectively transmits red light. According to this modification, pixels that selectively transmit green light and pixels that selectively transmit red light are used as the focus detection pixels. In FIG. **22**, the first and second pixels from the top are the focus detection pixels that collect the light $L\alpha$ from the upper section of the image-pickup optical system **210**, and the third and fourth pixels from the top are the focus detection pixels that collect the light $L\beta$ from the lower section of the image-pickup optical system **210**.

[0220] It is difficult to accurately detect the position of the focal plane on the basis of comparison between charge signals obtained from the focus detection pixels having different light-receiving wavelength ranges. Therefore, the charge signals are read from the focus detection pixels that have the same color filter (**524** or **525**) and that collect the light from the upper and lower sections of the image-pickup optical system **210**. Then, the position of the focal plane is detected as described in the first embodiment. In FIG. **22**, the position of the focal plane may be detected by reading the charge signals from the first and third focus detection pixels from the top that selectively receive green light. Alternatively, the position of the focal plane may be detected by reading the charge signals from the second and fourth focus detection pixels from the top that selectively receive red light.

[0221] While the focus detection and the focus adjustment are being performed, the image pickup device **500** is exposed to light and image data corresponding to an image to be displayed on the liquid crystal display **402** is generated. Therefore, a color distribution range of the object can be detected from the image data. Accordingly, the focus detection can be performed using the focus detection pixels that selectively receive green light if the green color component is stronger than the red color component, and the focus detection can be performed using the focus detection pixels that selectively receive red light if the red color component is stronger than the green color component. In this case, the focus detection can be accurately performed irrespective of the color distribution range of the object.

[0222] One of the color filters **524** and **525** is an example of a first optical filter described in the claims, and the other one is an example of a second optical filter described in the claims.

[0223] In the example shown in FIG. **22**, the pixels that selectively receive green light and red light are used as the focus detection pixels. However, pixels that selectively receive green light and blue light may instead be used as the focus detection pixels, and the focus detection may be similarly performed in accordance with the color distribution range of the object as described above. Alternatively, pixels corresponding to three color components, that is, red, green, and blue, may be used as the focus detection pixels, and the focus detection may be performed in a similar manner.

[0224] However, when it is most important to prevent reduction in color reproducibility in consideration of the color interpolation process, it is preferable to use only the pixels corresponding to green in a Bayer pattern as the focus detection pixels, as in the first embodiment, since the number of pixels corresponding to green is twice the number of pixels of other colors.

10. Modification of Arrangement of Focus Detection Pixels According to Embodiments of the Present Invention

[0225] FIG. **23** is a schematic plan view illustrating a modification of the arrangement of the focus detection pixels in the overall area of the image pickup device. In FIG. **2** which shows the first embodiment, the focus detection pixels are successively arranged with pixels for the blue light component interposed therebetween. This is simply an example of the arrangement of the focus detection pixels. As shown in FIG. **23**, the intervals between the pairs of focus detection pixels that collect light from the upper and lower sections of the image-pickup optical system **210** and the intervals between the pairs of focus detection pixels that collect light from the left and right sections of the image-pickup optical system **210** may be increased.

[0226] In the case where the focus detection is performed while a moving image is displayed, the charge signals from the focus detection pixels are extracted from the charge signals from all of the pixels. Therefore, from the viewpoint of ease of the extracting process, the focus detection pixels that collect light from the upper and lower sections of the image-pickup optical system **210** are preferably arranged linearly along a pixel column (in the vertical direction). Similarly, the focus detection pixels that collect light from the left and right sections of the image-pickup optical system **210** are preferably arranged linearly along a pixel row (in the horizontal direction).

[0227] The focus detection pixels may be arranged in a cross pattern along a center pixel column and a center pixel row as shown in FIG. **23** and FIG. **2**, so that the object at the center of an image space of the image-pickup optical system **210** can be easily brought into focus. This is, however, simply an example. The focus detection pixels may be disposed at

positions other than the center pixel column and the center pixel row, or be disposed mainly around the pixel on the optical axis of the image-pickup optical system **210**. The pixel columns or the pixel rows including the focus detection pixels may be arranged in a plurality of areas in the image pickup device **500** so that an object at desired positions of the image space of the image-pickup optical system **210** can be brought into focus. In such a case, focus detection can be performed using a pixel column or a pixel row selected from the pixel columns or the pixel rows arranged in the image pickup device **500**.

[0228] Alternatively, the focus detection pixels may be arranged at positions of pixels for the red light component or the blue light component instead of the positions of pixels for the green light component in the Bayer pattern. The focus detection pixels may either be arranged next to each other or separated from each other by predetermined intervals. Alternatively, the focus detection pixels may be arranged in a staggered pattern. The arrangement of the focus detection pixels may be determined in accordance with the focus detection accuracy and the image pickup performance of the image pickup device.

[0229] The present application contains subject matter related to that disclosed in Japanese Priority Patent Application JP 2009-126818 filed in the Japan Patent Office on May 26, 2009, the entire content of which is hereby incorporated by reference.

[0230] The embodiments of the present invention are mere examples in which the present invention is embodied, and matters described in the embodiments of the present invention correspond to the matters described in the claims to define the present invention, as stated in the embodiments of the present invention. Similarly, the matters described in the claims to define the present invention correspond to the matters referred to by the same names in the embodiments of the present invention. However, the present invention is not limited to the embodiments, and various modifications may be made without departing from the scope of the present invention.

What is claimed is:

1. A focus detection apparatus, comprising:

a plurality of first-type pixels, each first-type pixel including a photoelectric converter, a first optical member, and a second optical member, the photoelectric converter being configured to receive light from an image-pickup optical system and perform photoelectric conversion, the first and second optical members being arranged on an optical path from the image-pickup optical system to the photoelectric converter and having different refractive indices, each first-type pixel outputting a first charge signal corresponding to an amount of light received by the photoelectric converter;

a plurality of second-type pixels, each second-type pixel including the photoelectric converter, the first optical member, and the second optical member, the first and second optical members being arranged on the optical path from the image-pickup optical system to the photoelectric converter such that a positional relationship between the first and second optical members and the photoelectric converter differs from the positional relationship in each first-type pixel, each second-type pixel outputting a second charge signal corresponding to an amount of light received by the photoelectric converter; and

an image-formation-state detector configured to detect an image formation state of the image-pickup optical system on the basis of the first charge signals and the second charge signals.

2. The focus detection apparatus according to claim **1**,

wherein each of the first-type pixels and the second-type pixels further includes a light-collecting unit on the optical path from the image-pickup optical system to the photoelectric converter, the light-collecting unit collecting incident light from the image-pickup optical system on the photoelectric converter, and

wherein the first and second optical members are disposed between the light-collecting unit and the photoelectric converter.

3. The focus detection apparatus according to claim **2**,

wherein the first and second optical members are arranged such that a unit including the first and second optical members is opposed to an entire body of the photoelectric converter, such that the areas in which the first and second optical members are opposed to the photoelectric converter differ from each other, and such that the first and second optical members do not overlap with each other in an optical axis direction of the image-pickup optical system, and

wherein the first and second optical members are arranged such that a position of a boundary between the first and second optical members in each first-type pixel and a position of a boundary between the first and second optical members in each second-type pixel are at opposite sides of an axis that passes through the center of the photoelectric converter in the optical axis direction.

4. The focus detection apparatus according to claim **1**,

wherein each of the first-type pixels and the second-type pixels further includes a light-collecting unit on the optical path from the image-pickup optical system to the photoelectric converter, the light-collecting unit collecting incident light from the image-pickup optical system on the photoelectric converter, and

wherein the first and second optical members are disposed between the image-pickup optical system and the light-collecting unit.

5. The focus detection apparatus according to claim **1**,

wherein each of the first-type pixels and the second-type pixels further includes an optical filter on the optical path from the image-pickup optical system to the photoelectric converter, the optical filter selectively transmitting light with a predetermined wavelength range.

6. The focus detection apparatus according to claim **1**,

wherein each of the first-type pixels further includes a first optical filter or a second optical filter on the optical path from the image-pickup optical system to the photoelectric converter, the first optical filter selectively transmitting light with a predetermined wavelength range, the second optical filter selectively transmitting light with another predetermined wavelength range, and

wherein each of the second-type pixels further includes the first optical filter or the second optical filter on the optical path from the image-pickup optical system to the photoelectric converter.

7. The focus detection apparatus according to claim **1**,

wherein each of the first-type pixels and the second-type pixels further includes a waveguide member at a position between a unit including the first optical member and the second optical member and the photoelectric

converter, the waveguide member guiding incident light from the image-pickup optical system toward the photoelectric converter by reflection.

8. The focus detection apparatus according to claim **1**,

wherein at least one of the first and second optical members is composed of single crystal silicon, amorphous silicon, polysilicon, germanium, silicon dioxide, silicon nitride, siloxane, tungsten, aluminum, or copper.

9. The focus detection apparatus according to claim **1**,

wherein at least one of the first and second optical members is provided with a film made of an optical material on a surface facing the image-pickup optical system, the optical material having a reflectance that is lower than a reflectance of an inner section of the at least one of the first and second optical members.

10. A focus detection apparatus, comprising:

a plurality of first-type pixels, each first-type pixel including a photoelectric converter configured to receive light from an image-pickup optical system and perform photoelectric conversion, a light-collecting unit configured to collect incident light from the image-pickup optical system on the photoelectric converter, and an optical layer disposed on an optical path from the image-pickup optical system to the photoelectric converter, each first-type pixel outputting a first charge signal corresponding to an amount of light received by the photoelectric converter;

a plurality of second-type pixels, each second-type pixel including the photoelectric converter, the light-collecting unit, and the optical layer disposed on the optical path from the image-pickup optical system to the photoelectric converter, each second-type pixel outputting a second charge signal corresponding to an amount of light received by the photoelectric converter; and

an image-formation-state detector configured to detect an image formation state of the image-pickup optical system on the basis of the first charge signals and the second charge signals,

wherein each of the first-type pixels and the second-type pixels further includes an optical member having an refractive index that is different from a refractive index of the optical layer,

wherein the optical member included in each of the first-type pixels and the second-type pixels is disposed such that a peripheral edge of the optical member is separated from a straight line that passes through the center of the photoelectric converter along the optical axis direction of the image-pickup optical system and such that the optical member is opposed to only a part of the photoelectric converter, and

wherein the optical member is disposed such that a position of one end of the optical member that is close to the straight line in each of the first-type pixels and a position of one end of the optical member that is close to the straight line in each of the second-type pixels are at the opposite sides of the straight line.

11. The focus detection apparatus according to claim **10**,

wherein the optical member is provided with a film made of an optical material on a surface facing the image-pickup optical system, the optical material having a reflectance that is lower than a reflectance of an inner section of the optical member.

12. A focus detection apparatus, comprising:

a plurality of first-type pixels, each first-type pixel including a photoelectric converter configured to receive light from an image-pickup optical system and perform photoelectric conversion and an optical member disposed on an optical path from the image-pickup optical system to the photoelectric converter such that the optical member is opposed to only a part of the photoelectric converter, the optical member having a laminated structure in which films made of optical materials having different refractive indices are stacked together, each first-type pixel outputting a first charge signal corresponding to an amount of light received by the photoelectric converter;

a plurality of second-type pixels, each second-type pixel including the photoelectric converter and the optical member disposed on the optical path from the image-pickup optical system to the photoelectric converter such that a positional relationship between the optical member and the photoelectric converter differs from the positional relationship in each first-type pixel, each second-type pixel outputting a second charge signal corresponding to an amount of light received by the photoelectric converter; and

an image-formation-state detector configured to detect an image formation state of the image-pickup optical system on the basis of the first charge signals and the second charge signals.

13. The focus detection apparatus according to claim **12**,

wherein the optical member has a laminated structure in which the films made of the optical materials having different refractive indices are alternately stacked such that a normal line of lamination surfaces of the films is perpendicular to the optical axis direction of the image-pickup optical system.

14. A focus detection apparatus, comprising:

a plurality of first-type pixels, each first-type pixel including a photoelectric converter configured to receive light from an image-pickup optical system and perform photoelectric conversion, an optical layer disposed on an optical path from the image-pickup optical system to the photoelectric converter, a first waveguide disposed in the optical layer and having a refractive index that is higher than a refractive index of the optical layer, and a second waveguide disposed adjacent to the first waveguide in the optical layer and having a refractive index that is higher than the refractive index of the first waveguide, each first-type pixel outputting a first charge signal corresponding to an amount of light received by the photoelectric converter;

a plurality of second-type pixels, each second-type pixel including the photoelectric converter, the optical layer disposed on the optical path from the image-pickup optical system to the photoelectric converter, and the first and second waveguides disposed adjacent to each other in the optical layer such that a positional relationship between the first and second waveguides and the photoelectric converter differs from the positional relationship in each first-type pixel, each second-type pixel outputting a second charge signal corresponding to an amount of light received by the photoelectric converter; and

an image-formation-state detector configured to detect an image formation state of the image-pickup optical system on the basis of the first charge signals and the second charge signals.

15. The focus detection apparatus according to claim **14**,

wherein each of the first-type pixels and the second-type pixels further includes a light-collecting unit on the optical path, the light-collecting unit collecting incident light from the image-pickup optical system on the photoelectric converter, and

wherein the first and second waveguides are arranged such that the positional relationship between the first and second waveguides in the first-type pixel and the positional relationship between the first and second waveguides in the second-type pixel are symmetrical to each other about an axis that passes through the center of the photoelectric converter in an optical axis direction of the image-pickup optical system.

16. An image pickup device, comprising:

a plurality of first-type pixels, each first-type pixel including a photoelectric converter, a first optical member, and a second optical member, the photoelectric converter being configured to receive light from an image-pickup optical system and perform photoelectric conversion, the first and second optical members being arranged on an optical path from the image-pickup optical system to the photoelectric converter and having different refractive indices, each first-type pixel outputting a first charge signal corresponding to an amount of light received by the photoelectric converter;

a plurality of second-type pixels, each second-type pixel including the photoelectric converter, the first optical member, and the second optical member, the first and second optical members being arranged on the optical path from the image-pickup optical system to the photoelectric converter such that a positional relationship between the first and second optical members and the photoelectric converter differs from the positional relationship in each first-type pixel, each second-type pixel outputting a second charge signal corresponding to an amount of light received by the photoelectric converter; and

a plurality of image pickup pixels, each image pickup pixel including the photoelectric converter and outputting a third charge signal corresponding to an amount of light received by the photoelectric converter.

17. An electronic camera, comprising:

a plurality of first-type pixels, each first-type pixel including a photoelectric converter, a first optical member, and a second optical member, the photoelectric converter being configured to receive light from an image-pickup optical system and perform photoelectric conversion, the first and second optical members being arranged on an optical path from the image-pickup optical system to the photoelectric converter and having different refractive indices, each first-type pixel outputting a first charge signal corresponding to an amount of light received by the photoelectric converter;

a plurality of second-type pixels, each second-type pixel including the photoelectric converter, the first optical member, and the second optical member, the first and second optical members being arranged on the optical path from the image-pickup optical system to the photoelectric converter such that a positional relationship between the first and second optical members and the photoelectric converter differs from the positional relationship in each first-type pixel, each second-type pixel outputting a second charge signal corresponding to an amount of light received by the photoelectric converter;

a plurality of image pickup pixels, each image pickup pixel including the photoelectric converter and outputting a third charge signal corresponding to an amount of light received by the photoelectric converter;

a signal processor configured to generate image data on the basis of the third charge signals;

an image-formation-state detector configured to detect an image formation state of the image-pickup optical system on the basis of the first charge signals and the second charge signals; and

a focus controller configured to adjust a lens position of the image-pickup optical system such that the lens position approaches an in-focus position on the basis of the image formation state determined by the image-formation-state detector.

* * * * *