US007911006B2

(12) **United States Patent**
Chaudhry et al.

(10) **Patent No.: US 7,911,006 B2**
(45) **Date of Patent: Mar. 22, 2011**

(54) **STRUCTURE AND FABRICATION METHOD FOR CAPACITORS INTEGRATIBLE WITH VERTICAL REPLACEMENT GATE TRANSISTORS**

(75) Inventors: **Samir Chaudhry**, Irvine, CA (US); **Paul Arthur Layman**, Ontario (CA); **John Russell McMacken**, Summerfield, NC (US); **J. Ross Thomson**, Clermont, FL (US); **Jack Qingsheng Zhao**, Plano, TX (US)

(73) Assignee: **Agere Systems Inc.**, Allentown, PA (US)

(*) Notice: Subject to any disclaimer, the term of this patent is extended or adjusted under 35 U.S.C. 154(b) by 0 days.

(21) Appl. No.: **12/610,733**

(22) Filed: **Nov. 2, 2009**

(65) **Prior Publication Data**

US 2010/0044767 A1 Feb. 25, 2010

Related U.S. Application Data

(60) Division of application No. 11/809,686, filed on May 31, 2007, now Pat. No. 7,633,118, which is a continuation of application No. 10/819,253, filed on Apr. 5, 2004, now Pat. No. 7,242,056, which is a continuation of application No. 09/956,381, filed on Sep. 18, 2001, now abandoned.

(51) **Int. Cl.**
H01L 29/78 (2006.01)

(52) **U.S. Cl.** **257/382**; 257/296; 257/301; 257/305; 257/306; 257/329; 257/E27.096

(58) **Field of Classification Search** 257/328, 257/296, 301, 305, 306, 329, E27.096
See application file for complete search history.

(56) **References Cited**

U.S. PATENT DOCUMENTS

4,366,495 A 12/1982 Goodman et al.
(Continued)

FOREIGN PATENT DOCUMENTS

EP 1059670 12/2000
(Continued)

OTHER PUBLICATIONS

Dudek, et al, "Lithography-Independent NanometeT Silicon MOSFET's on Insulator", IEEE Transactions on Electron Devices, vol. 43, No. 10, Oct. 1996, pp. 1626-1631.

(Continued)

Primary Examiner — Eugene Lee

(57) **ABSTRACT**

A process and an architecture related to a vertical MOSFET device and a capacitor for use in integrated circuits. Generally, the integrated circuit structure includes a semiconductor layer with a major surface formed along a plane thereof and further including a first doped region formed in the surface. A second doped region of a different conductivity type than the first doped region is positioned over the first region. A third doped region of a different conductivity type than the second region is positioned over the second region. In one embodiment of the invention, a semiconductor device includes a first layer of semiconductor material and a first field-effect transistor having a first source/drain region formed in the first layer. A channel region of the transistor is formed over the first layer and an associated second source/drain region is formed over the channel region. The integrated circuit further includes a capacitor having a bottom plate, dielectric layer and a top capacitor plate. In an associated method of manufacture, a first device region, selected from the group consisting of the source region and a drain region of a field-effect transistor is formed on a semiconductor layer. A first field-effect transistor gate region is formed over the first device region. A capacitor comprising top and bottom layers with a dielectric layer disposed therebetween, is also formed on the semiconductor layer. In another embodiment, the capacitor layers are formed within a trench or window formed in the semiconductor layer.

5 Claims, 17 Drawing Sheets

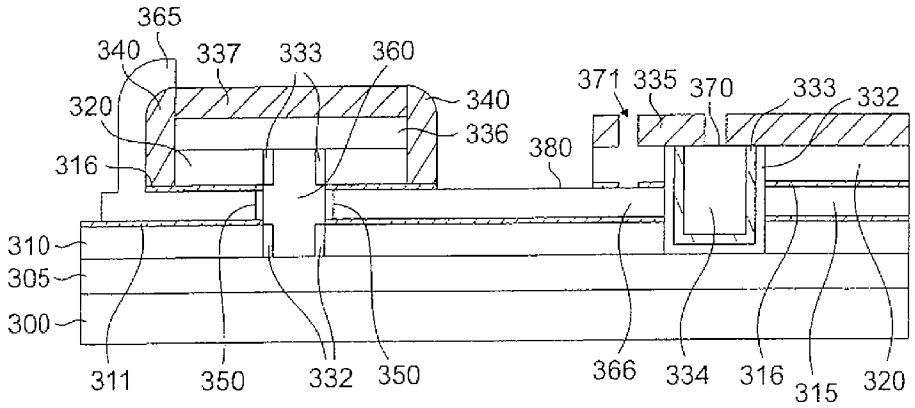

U.S. PATENT DOCUMENTS

4,455,565	A	6/1984	Goodman et al.	
4,587,713	A	5/1986	Goodman et al.	
4,683,643	A	8/1987	Nakajima et al.	
4,786,953	A	11/1988	Morie et al.	
4,837,606	A	6/1989	Goodman et al.	
5,006,910	A	4/1991	Taguchi et al.	
5,276,343	A	1/1994	Kumagai et al.	
5,342,797	A	8/1994	Sapp et al.	
5,382,816	A	1/1995	Mitsui	
5,414,289	A	5/1995	Fitch et al.	
5,576,238	A	11/1996	Fu et al.	
5,578,850	A	11/1996	Fitch et al.	
5,612,563	A	3/1997	Fitch et al.	
5,627,395	A	5/1997	Witek et al.	
5,668,391	A	9/1997	Kim et al.	
5,744,846	A	4/1998	Batra et al.	
5,780,888	A	7/1998	Maeda et al.	
5,869,859	A	2/1999	Hanagasaki et al.	
5,994,735	A	11/1999	Maeda et al.	
6,027,975	A	2/2000	Hergenrother et al.	
6,072,216	A	6/2000	Williams et al.	
6,133,099	A	10/2000	Sawada et al.	
6,197,641	B1	3/2001	Hergenrother et al.	
6,297,531	B2	10/2001	Armacost et al.	
6,323,518	B1	11/2001	Sakamoto et al.	
6,429,068	B1 *	8/2002	Divakaruni et al.	438/243
6,653,181	B2	11/2003	Hergenrother et al.	
6,724,031	B1 *	4/2004	Akatsu et al.	257/302
6,727,539	B2 *	4/2004	Divakaruni et al.	257/296

FOREIGN PATENT DOCUMENTS

GB	2350929		12/2000
GB	2366449		3/2002
JP	6317054	A	7/1988
JP	6021467	A	1/1994
JP	10112543	A	4/1998
JP	2000091344	A	3/2000
JP	2001028399	A	1/2001

OTHER PUBLICATIONS

Risch, et al, "Vertical MOS Transistors with 70 nfl Channel Length", IEEE Transactions on Electron Devices, vol. 43, No. 9, Sep. 1996, pp. 1495-1498.

Takato, et al, Impact of Surrounding Gate Transistor (SGT) for Ultra-High-Density LSI's', IEEE Transactions on Electron Devices, vol. 38, No. 3, Mar. 1991, pp. 573-577.

Takato, et al, "High Performance CMOS Surrounding Gate Transistor (SGT) for Ultra High Density LSIs", IEDM 1988, pp. 222-225.

Hergenrother, et al, "The Vertical Replacement-Gate (VRG) MOSFET: A 50-nm Vertical MOSFET withLithography-Independent Gate Length", Technical Digest of IEDM, 1999, pp. 75-78.

Oh, et al, "50 nm Vertical Replacement-Gate (VRG) pMOSFETs", IEEE 2000.

Hergenrother, et al, "The Vertical Replacement-Gate (VRO) MOSFETt: A High Performance Vertical MOSFET with Lithography-Independent Critical Dimensions", no publication infonnation apparent from document.

Monroe, et At, "The Vertical Replacement-Gate (VRG) Process for Scalable, General-purpose Complementary Logic", Paper 7.5, pp. 1-7, date and publication information unknown.

* cited by examiner

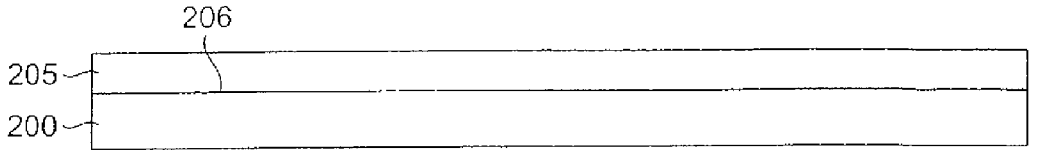

FIG. 1A

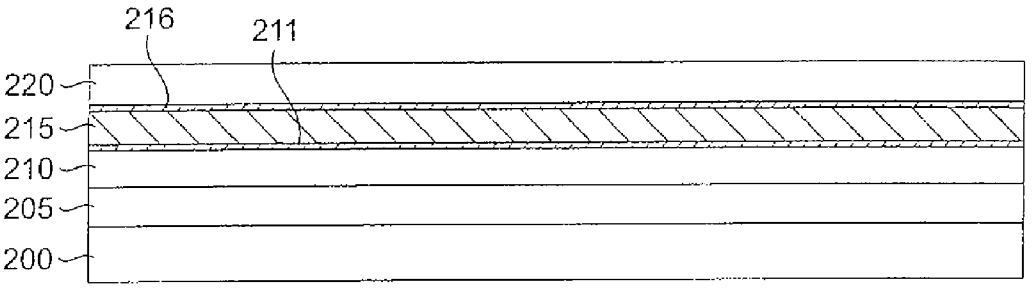

FIG. 1B

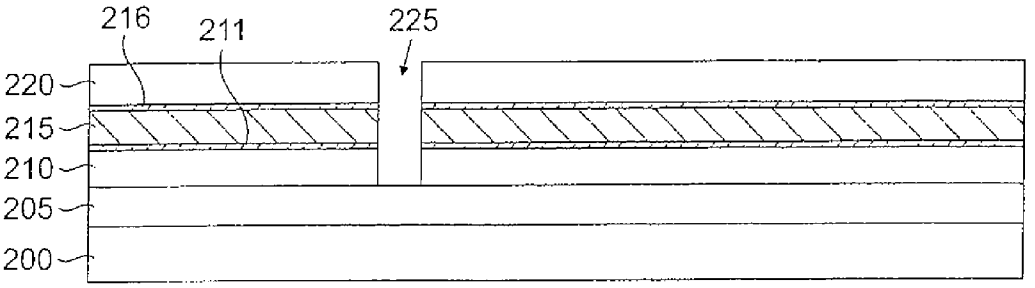

FIG. 1C

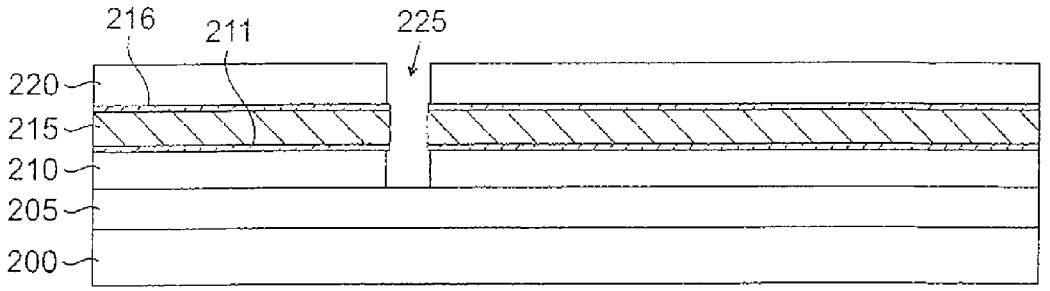

FIG. 1D

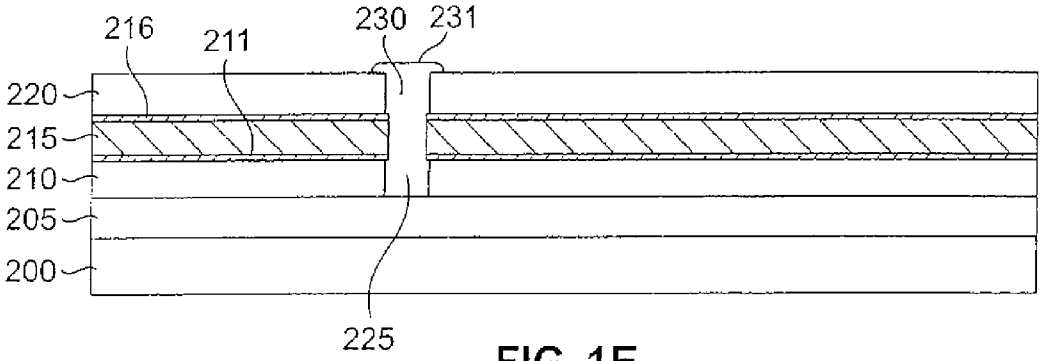

FIG. 1E

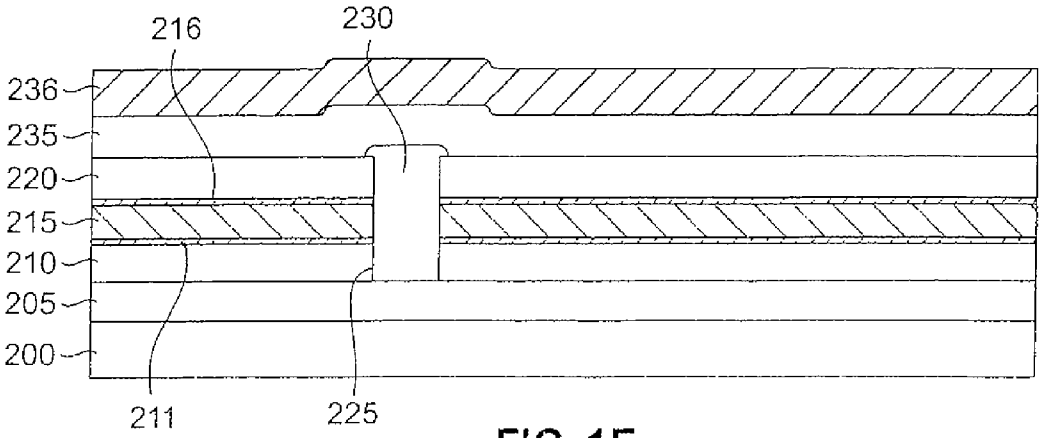

FIG. 1F

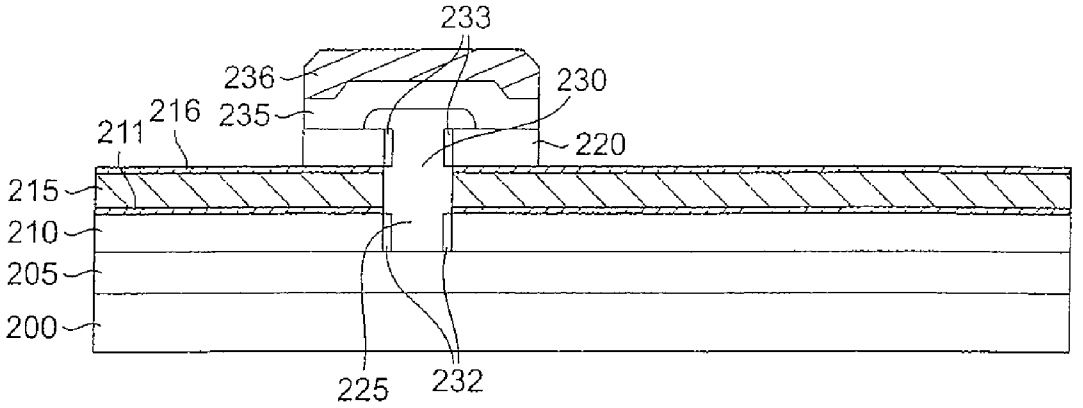
233
236
230
216
235
211
220
215
210
205
200
225
232

FIG. 1G

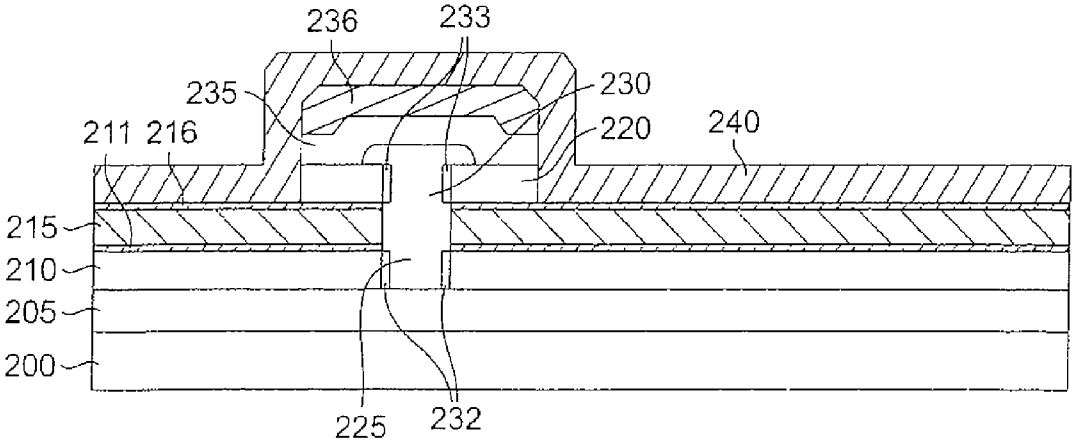
236
233
235
230
211
216
220
240
215
210
205
200
225
232

FIG. 1H

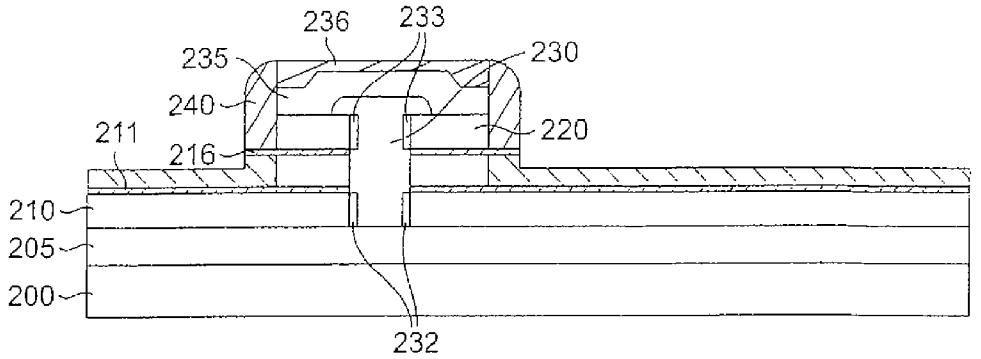

FIG. 1I

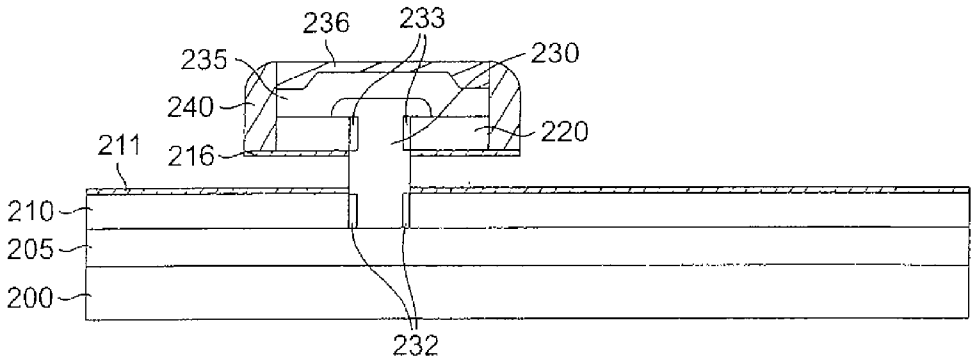

FIG. 1J

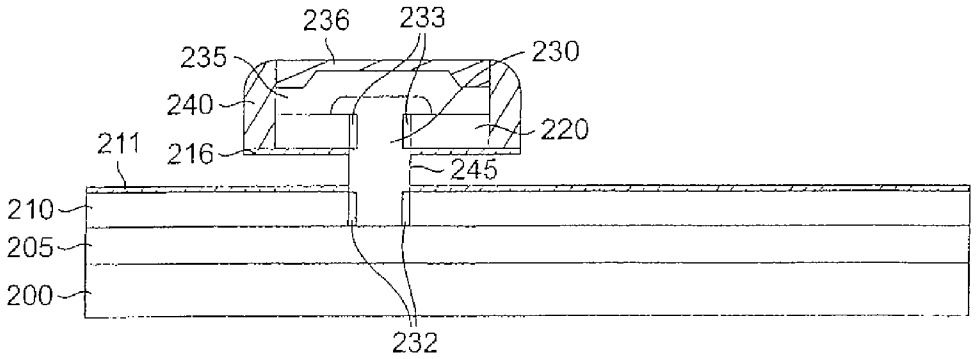

FIG. 1K

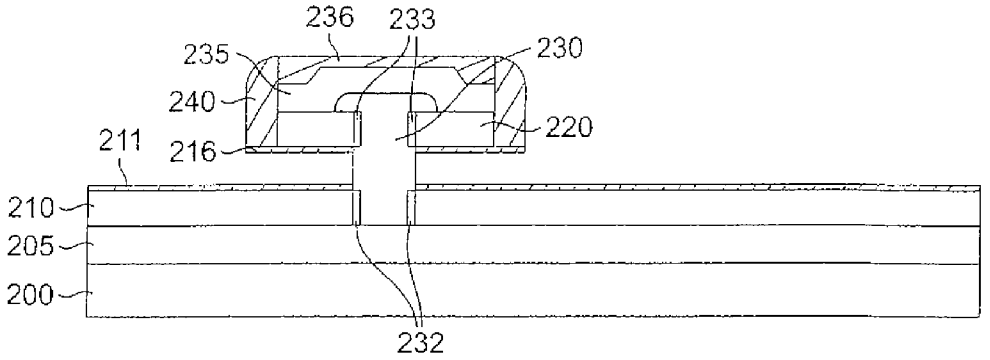

FIG. 1L

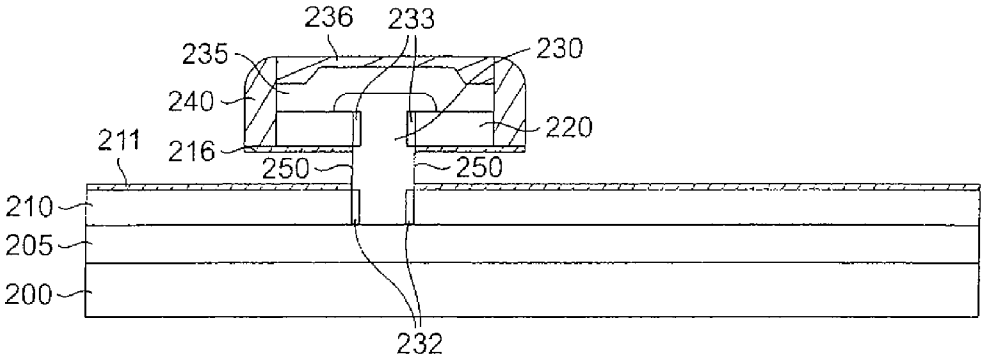

FIG. 1M

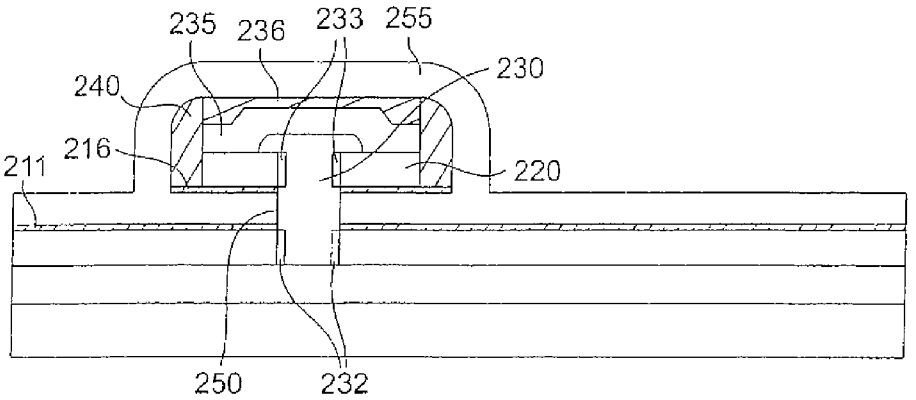

FIG. 1N

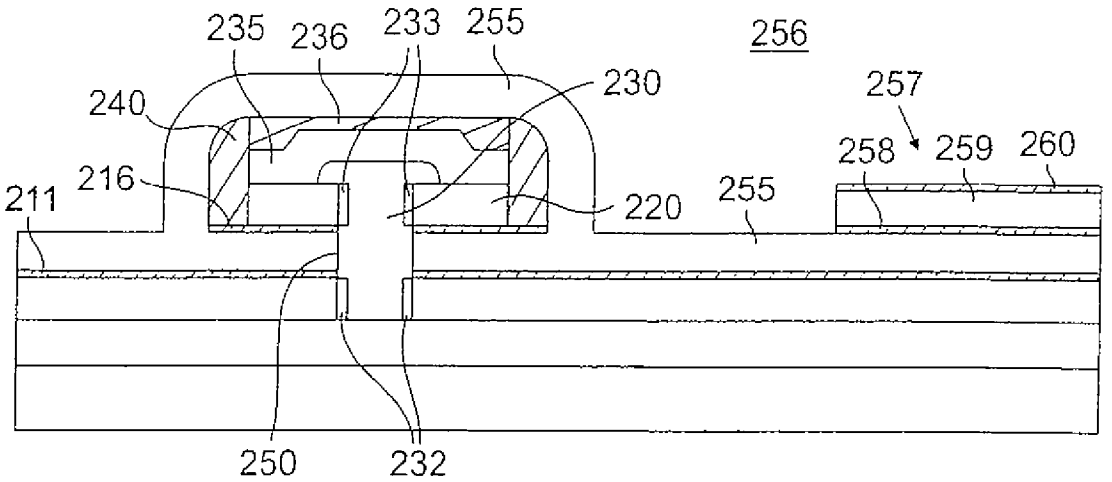
235
236
233
255
256
230
257
240
258
259
260
216
211
220
255
250
232

FIG. 1O

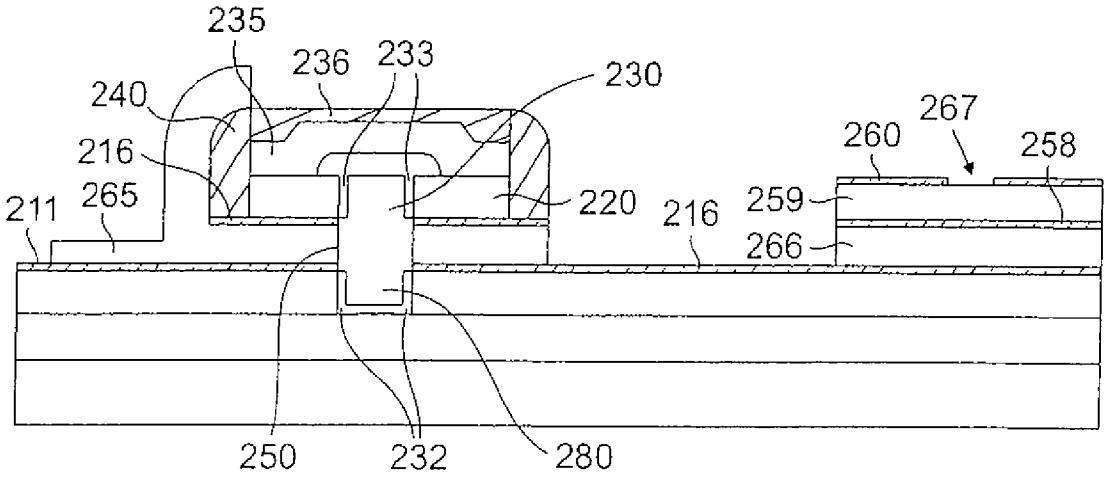
235
236
233
230
240
267
260
258
216
211
265
220
216
259
266
250
232
280

FIG. 1P

FIG. 1Q

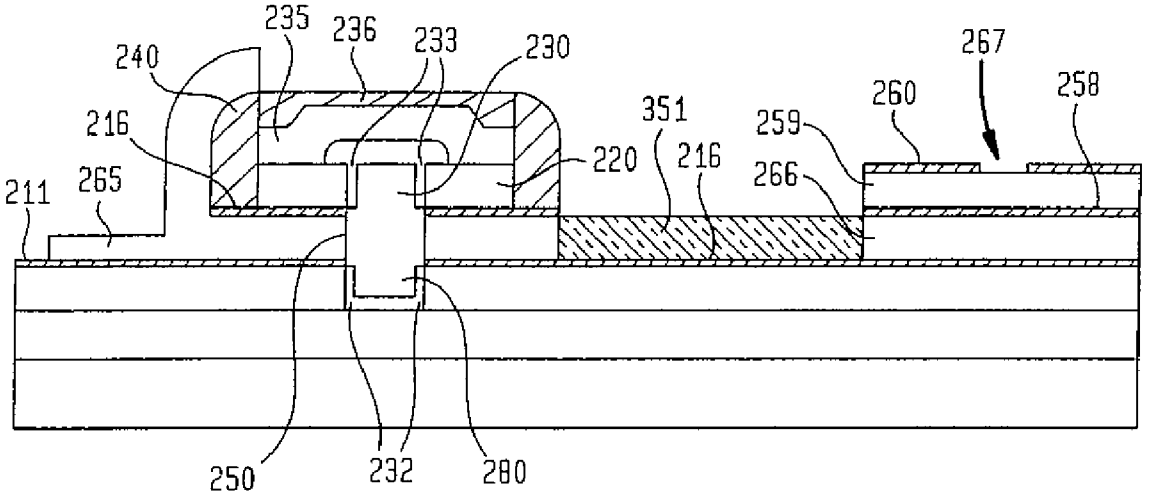
235
236
233
230
240
267
260
258
351
259
216
220
216
266
211
265
250
232
280

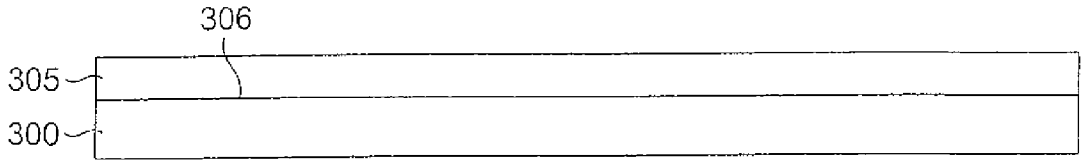

FIG. 2A

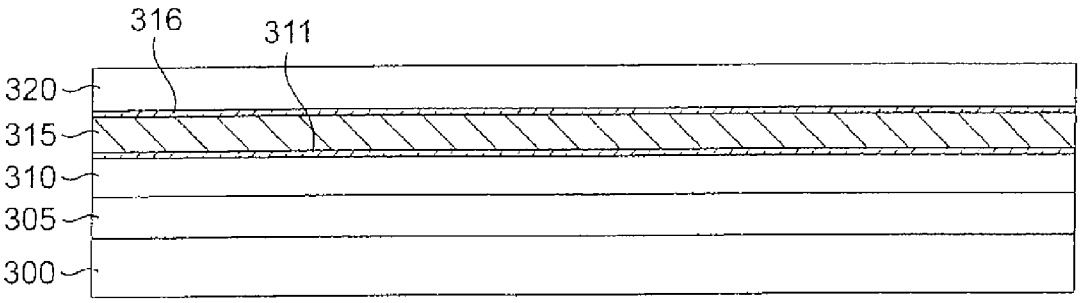

FIG. 2B

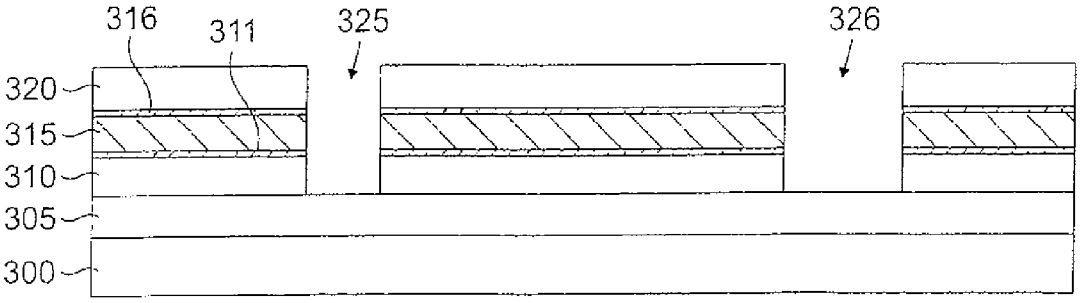

FIG. 2C

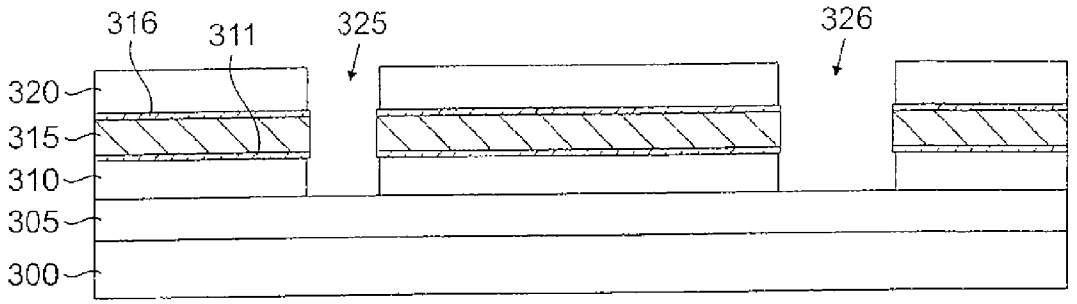

FIG. 2D

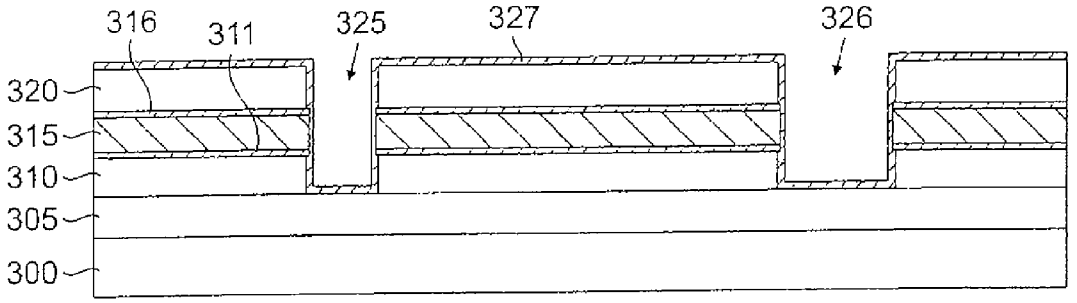

FIG. 2E

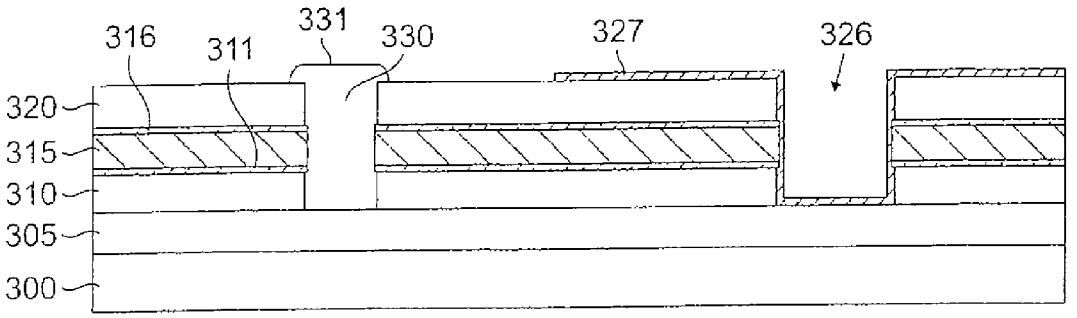

FIG. 2F

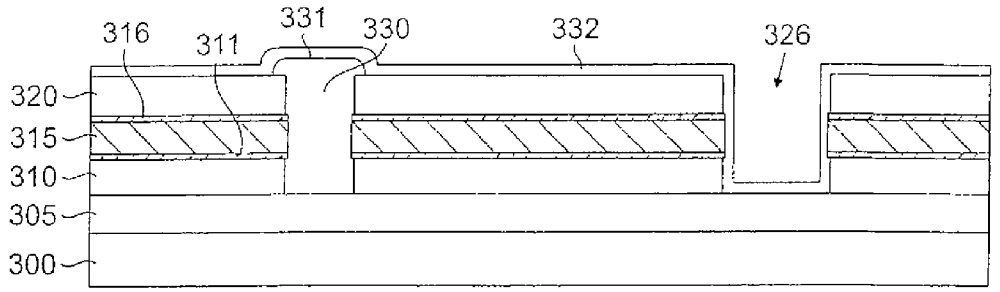

FIG. 2G

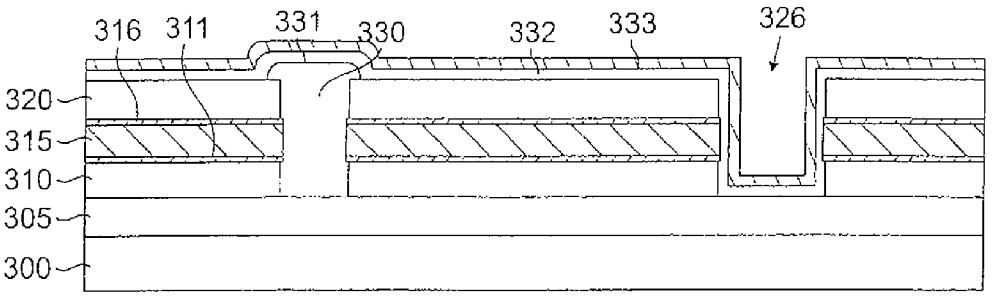

FIG. 2H

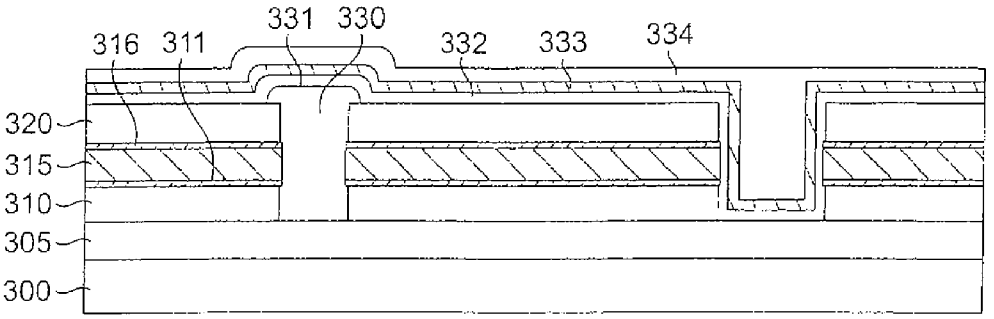

FIG. 2I

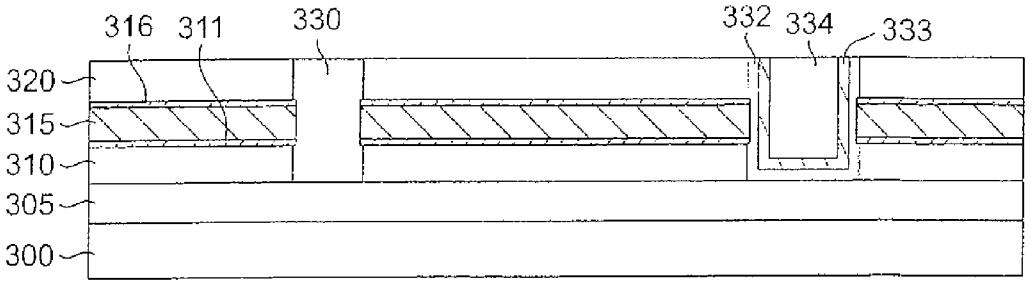

FIG. 2J

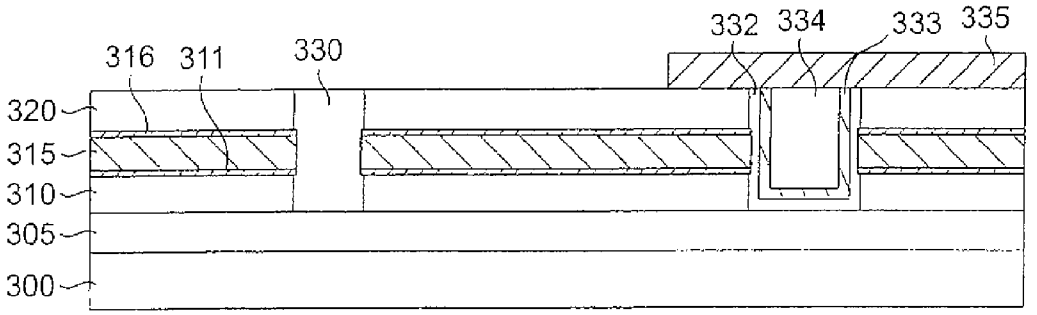

FIG. 2K

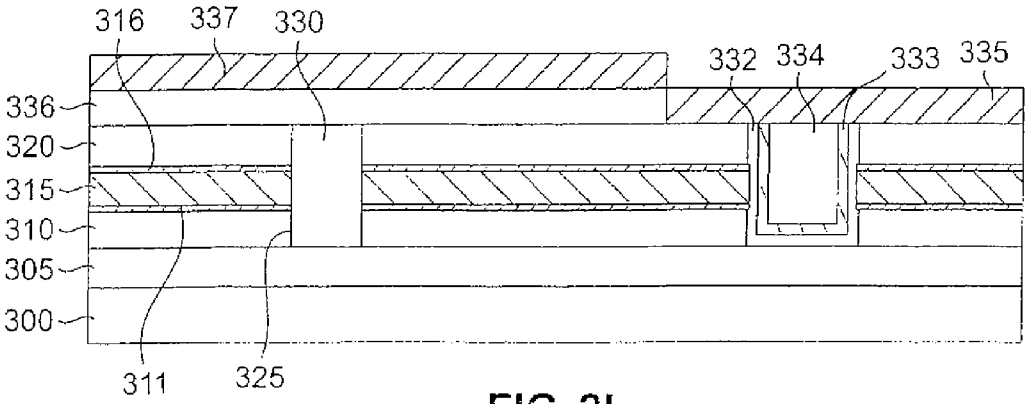

FIG. 2L

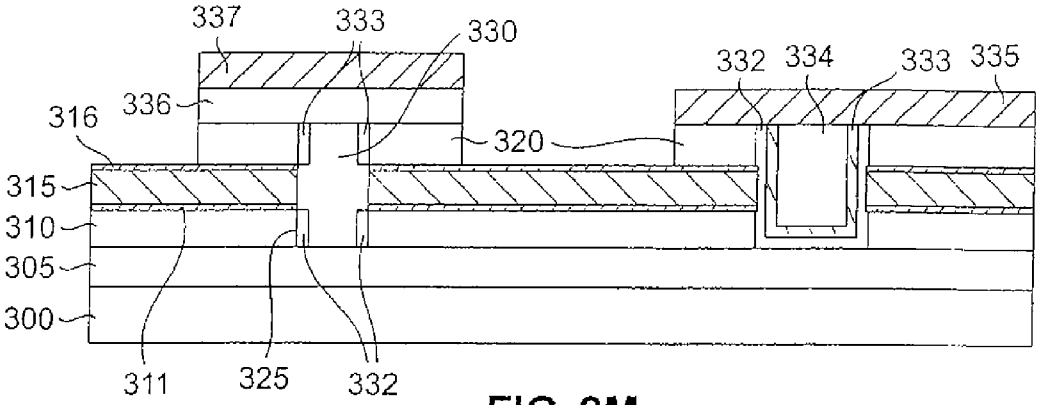
337
333
330
332
334
333
335
336
316
320
315
310
305
300
311
325
332

FIG. 2M

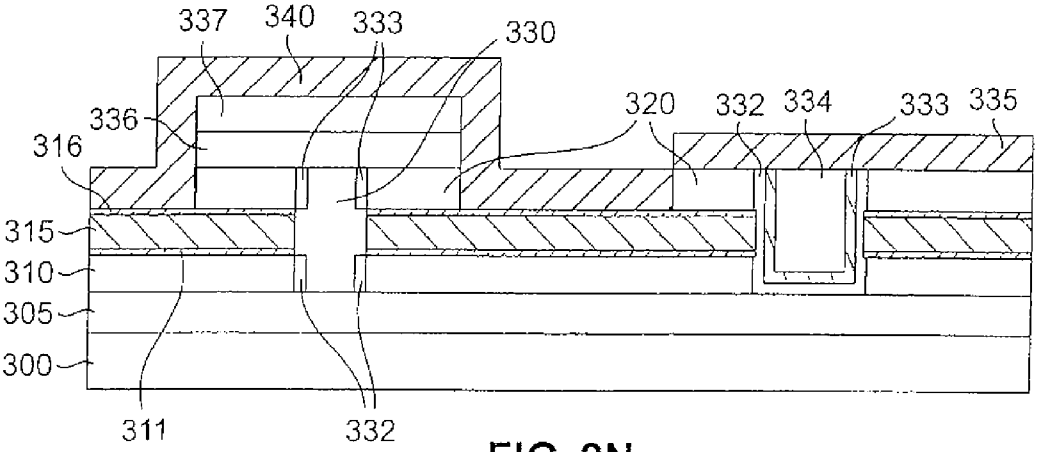
337
340
333
330
320
332
334
333
335
336
316
315
310
305
300
311
332

FIG. 2N

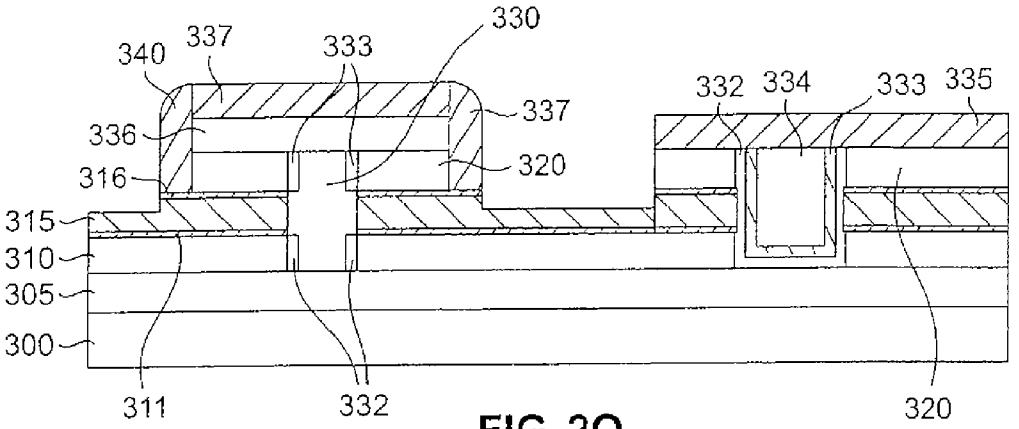
330
340
337
333
337
336
320
316
315
310
305
300
311
332
332
334
333
335
320

FIG. 2O

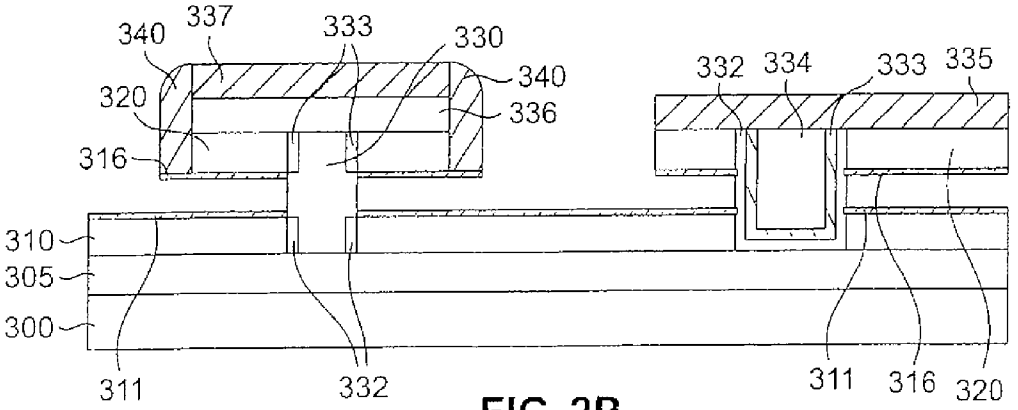
340
337
333
330
340
320
336
316
310
305
300
311
332
332
334
333
335
311
316
320

FIG. 2P

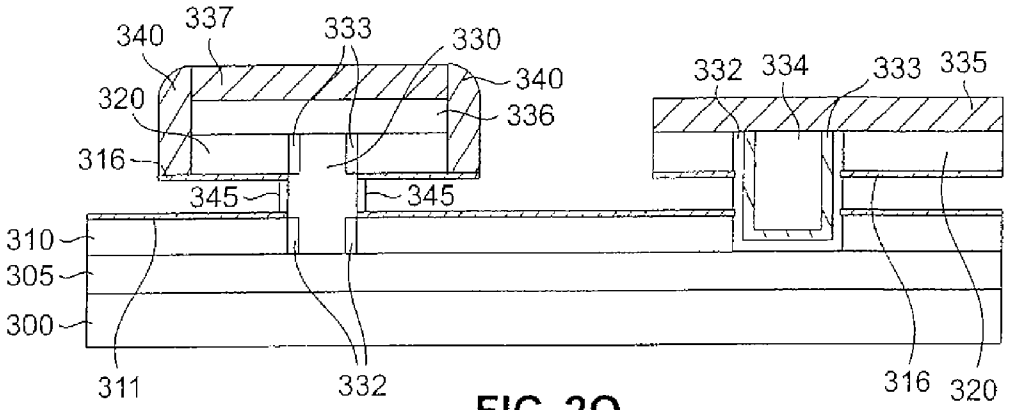
340
337
333
330
340
320
336
316
345
345
332
334
333
335
310
305
300
311
332
316
320

FIG. 2Q

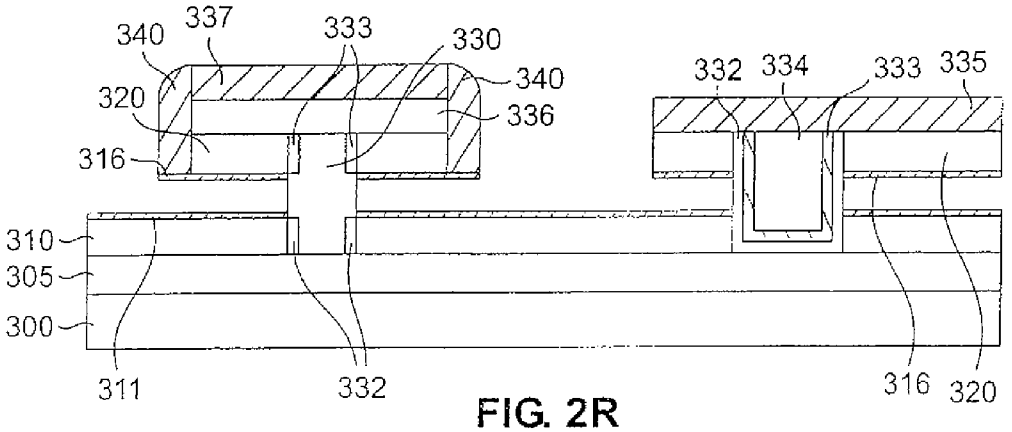
340
337
333
330
340
320
336
316
332
334
333
335
310
305
300
311
332
316
320

FIG. 2R

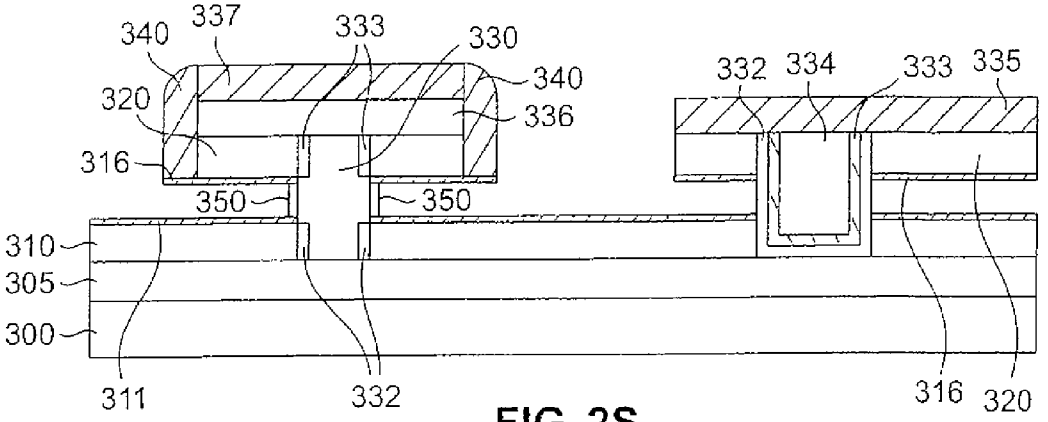
340
337
333
330
340
320
336
316
350
350
332
334
333
335
310
305
300
311
332
316
320

FIG. 2S

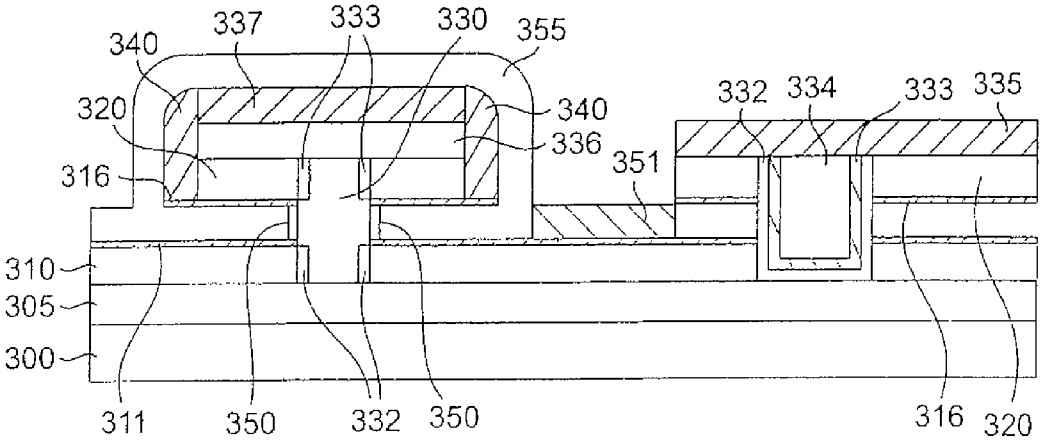
340
337
333
330
355
320
340
336
316
351
332
334
333
335
310
305
300
311
350
332
350
316
320

FIG. 2T

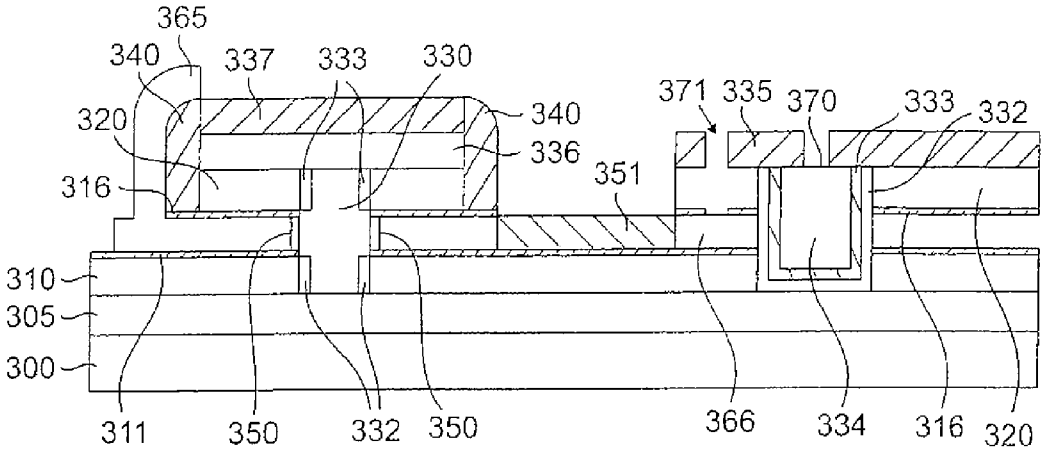
365
340
337
333
330
320
340
336
316
371
335
370
333
332
351
310
305
300
311
350
332
350
366
334
316
320

FIG. 2U

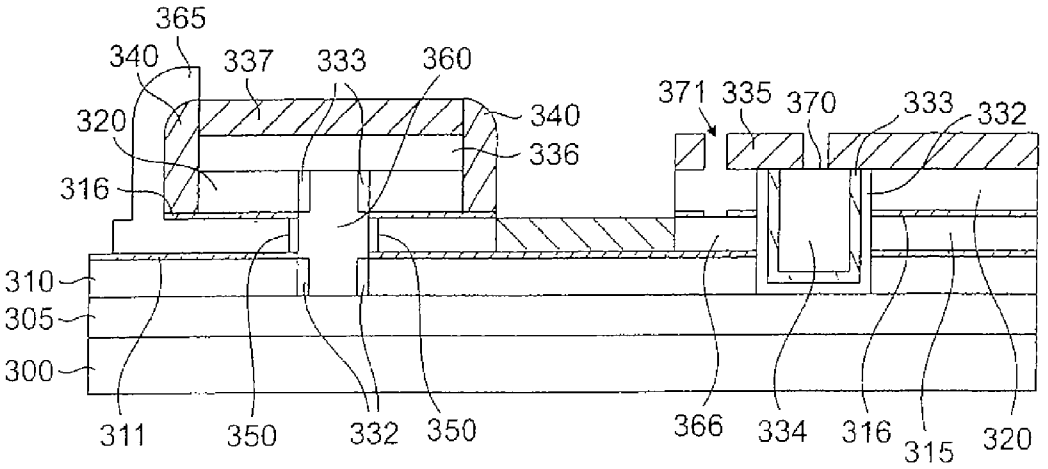
365
340
337
333
360
320
340
336
316
371
335
370
333
332
310
305
300
311
350
332
350
366
334
316
315
320

FIG. 2V

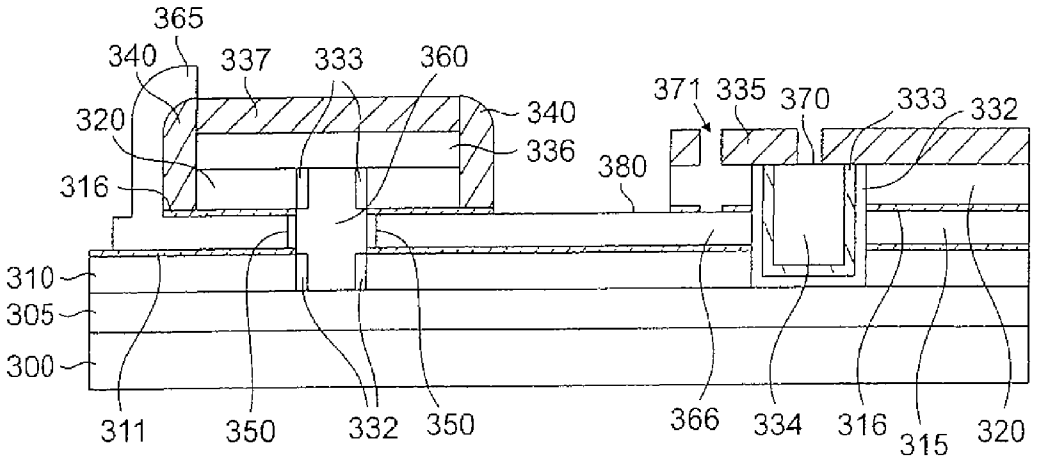
365
340
337
333
360
340
320
336
316
371
335
370
333
332
380
310
305
300
311
350
332
350
366
334
316
315
320

FIG. 2W

STRUCTURE AND FABRICATION METHOD FOR CAPACITORS INTEGRATIBLE WITH VERTICAL REPLACEMENT GATE TRANSISTORS

CROSS-REFERENCE TO RELATED APPLICATIONS

This application is a divisional of U.S. application Ser. No. 11/809,686 filed on May 31, 2007, which is a continuation of U.S. application Ser. No. 10/819,253 filed on Apr. 5, 2004, which issued as U.S. Pat. No. 7,242,056 and which is a continuation of U.S. application Ser. No. 09/956,381 filed on Sep. 18, 2001, now abandoned, the disclosures of which are incorporated herein by reference.

FIELD OF THE INVENTION

The present invention is directed to semiconductor devices incorporating junctions of varying conductivity types designed to conduct current and methods of making such devices. More specifically, the present invention relates to a design and a process for fabricating polysilicon-nitride-polysilicon, metal-nitride-polysilicon and polysilicon-oxide-polysilicon capacitors using a fabrication process compatible with the fabrication of vertical transistors.

BACKGROUND OF THE INVENTION

Enhancing semiconductor device performance and increasing device density, to increase the number of devices per unit area, continue to be important objectives of the semiconductor fabrication industry. Device density is increased by making individual devices smaller and packing devices more compactly. Also, as the device dimensions (also referred to as feature size or design rules) decrease, the methods for forming devices and their constituent elements must be adapted. For instance, production line feature sizes are currently in the range of 0.25 microns to 0.18 microns, with an inexorable trend toward small dimensions. However, as the device dimensions shrink, certain manufacturing limitations arise, especially with respect to the lithographic processes. In fact, current photolithographic processes are nearing the point where they are unable to accurately manufacture devices at the required minimal sizes demanded by today's device users.

Currently most metal-oxide-semiconductor field effect transistors (MOSFETs) are formed in a lateral configuration with the current flowing parallel to the plane of the substrate or body surface in which the source and drain regions are formed. As the size of these MOSFET devices decreases to achieve increased device density, the fabrication process becomes increasingly difficult. In particular, the lithographic process for creating the channel is problematic, as the wavelength of the radiation used to delineate an image in the photolithographic pattern approaches the device dimensions. As applied to lateral MOSFETs, the channel length is approaching the point where it cannot be precisely controlled using these photolithographic techniques.

Recent advances in packing density have resulted in several variations of a vertical MOSFET. In particular, the vertical device is described in Takato, H., et al., "Impact of Surrounding Gates Transistor (SGT) for Ultra-High-Density LSI's, IEEE Transactions on Electron Devices, Volume 38(3), pp. 573-577 (1991), has been proposed as an alternative to the planar MOSFET devices. Recently, there has been described a MOSFET characterized as a vertical replacement gate transistor. See Hergenrother, et al, "The Vertical-Replacement Gate (VRG) MOSFET: A 50-nm Vertical MOSFET with Lithography-Independent Gate Length," Technical Digest of the International Electron Devices Meeting, p. 75, 1999. Commonly owned U.S. Pat. Nos. 6,027,975 and 6,197,641, which are hereby incorporated by reference, teach certain techniques for the fabrication of vertical replacement gate (VRG) MOSFETs.

To fabricate operational circuitry on an integrated circuit (IC), it is also necessary to incorporate passive elements into the IC fabrication process. In particular, capacitors are formed as junction capacitors or thin-film capacitors. As is known, the application of a reverse bias voltage across a semiconductor junction forces the mobile carriers to move away from the junction thereby creating a depletion region. The depletion region acts as the dielectric of a parallel-plate capacitor, with the depletion width representing the distance between the plates. Thus the junction capacitance is a function of the depletion width, which is in turn a function of the applied reverse bias and the impurity concentrations in the immediate vicinity of the junction. Thin-film capacitors, which are a direct miniaturization of conventional parallel-plate capacitors, are also fabricated for use on integrated circuits. Like the discrete capacitor, the thin-film capacitor comprises two conductive layers separated by a dielectric. One type of thin-film capacitor is formed as a metal-oxide-semiconductor capacitor, having a highly doped bottom plate, silicon dioxide as the dielectric, and a metal top plate. A thin-film capacitor can also be formed with two metal layers forming the top and bottom plates, separated by a dielectric, such as silicon dioxide or silicon nitride. Silicon nitride is preferred since it offers a higher dielectric constant and can thus provide a higher capacitance per area. The metal-oxide semiconductor capacitor structure is the most common because it is readily compatible with conventional integrated circuit processing technology. The capacitance per unit area of a thin-film capacitor is equal to the ratio of the permittivity and the dielectric thickness. Although thin-film capacitors offer higher capacitance values per unit area and fewer parasitic problems, they can fail by breakdown of the dielectric when the dielectric voltage rating is exceeded.

SUMMARY OF THE INVENTION

The present invention teaches a process for fabricating integrated circuit structures including both MOSFET devices and various capacitor configurations. The process includes forming a first device region, either a source or drain region in a semiconductor substrate. A multilayer stack of at least three layers is formed over the first device region. The middle layer of the three layers is a sacrificial layer, which is later be removed and replaced by a gate electrode. A window is formed in the three layers followed by the formation of doped semiconductor material, i.e., a semiconductor plug, within the window. A second device region (either a source region or a drain region) is formed at the upper end of the semiconductor plug. The sacrificial layer is then removed and a gate oxide grown or deposited over the exposed portion of the semiconductor plug. The gate electrode is then formed adjacent the gate oxide. In one embodiment, the gate electrode further extends to a region of the substrate beyond the MOSFET device, where it serves as the bottom plate of a capacitor. A dielectric layer is formed over the bottom plate, followed by a top capacitor plate.

In another embodiment, a capacitor is formed in a second window formed in the multilayer stack. In particular, the second window includes a first conformal conductive layer underlying a dielectric layer. The second conductive layer

(the capacitor top plate) fills the remaining volume in the window. As a result, the three layers in the window form a capacitor. It is especially advantageous that the formation of each of these capacitors does not add new mask steps when applied to the basic VRG MOSFET process flow. Only mask changes are required to fabricate both the planar and the windowed capacitors according to the teachings of the present invention. The teachings of the present invention for forming the various capacitor embodiments are applicable not only to the VRG MOSFET process, but can be applied to other vertical transistor processes.

BRIEF DESCRIPTION OF THE DRAWINGS

The present invention can be more easily understood and the further advantages and uses thereof more readily apparent, when considered in view of the description of the preferred embodiments and the following figures in which:

FIGS. **1**A through **1**Q are cross-sectional views illustrating the process steps for fabricating a poly-nitride-poly or a metal-nitride-poly capacitor; and

FIGS. **2**A through **2**W are cross-sectional views illustrating the process steps for fabricating a poly-oxide-poly capacitor.

In accordance with common practice, the various described features are not drawn to scale but are drawn to emphasize specific features relevant to the invention. Reference characters denote like elements throughout the figures and text.

DESCRIPTION OF THE PREFERRED EMBODIMENTS

The present invention is directed to capacitor structures and associated fabrication techniques for fabricating polysilicon-nitride-polysilicon (PNP), metal-nitride-polysilicon (MNP) and polysilicon-oxide-polysilicon (POP) capacitors using a process similar to and compatible with the fabrication of vertical replacement gate metal-oxide-semiconductor field-effect transistors (VRG MOSFETs). In particular, it is desirable to manufacture the capacitors and the VRGs on a single silicon substrate to minimize cost and fabrication complexity, with a minimum number of extra steps required to fabricate the capacitors. The present invention discloses capacitor devices and processes for fabricating the capacitors that achieve these goals.

With regard to the fabrication of transistors and integrated circuits, the term "major surface" refers to that surface of the semiconductor layer about which a plurality of transistors are fabricated, e.g., in a planar process. As used herein, the term "vertical" means substantially orthogonal with respect to the major surface. Typically, the major surface is along a <100> plane of a monocrystalline silicon substrate on which the field-effect transistor devices are fabricated. The term "vertical transistor" means a transistor with individual semiconductor components vertically oriented with respect to the major surface so that the current flows vertically from drain to source (electrons flow from source to drain). By way of example, for a vertical MOSFET, the source, channel and drain regions are formed in relatively vertical alignment with respect to the major surface.

Each of FIGS. **1**A through **1**P and **2**A and through **2**V illustrate a partial cross-section of an integrated circuit structure during various stages of fabrication, to configure an exemplary circuit function according to the present invention. From the description, it will become apparent how certain capacitors may be configured, alone or in combination with other devices, e.g., bipolar junction transistors, junction field-effect transistors and metal-oxide-semiconductor field-effect transistors to form an integrated circuit.

One embodiment of the present invention for fabricating vertical replacement gate MOSFETs and capacitors on a single silicon substrate is illustrated with reference to FIGS. **1**A through **1**P. The various semiconductor features and regions described therein are preferably composed of silicon, but it is known to those skilled in the art that other embodiments of the invention may be based on other semiconductor materials (including compound or heterojunction semiconductors) alone or in combination. With references to FIGS. **1**A through **1**P, fabrication of the vertical MOSFET device is illustrated in the left side of the figures and fabrication of the capacitor is illustrated in the right side of the Figures. However, it is not necessary for the capacitor and MOSFET devices to be fabricated adjacent each other; the side-by-side representation is utilized solely to illustrate the compatibility between the two processes. The capacitors fabricated according to the teachings of the present invention can be formed anywhere on the integrated circuit.

Referring to FIG. **1**A, a heavily doped source region **205** is formed along a major surface **206** in a silicon substrate **200**, preferably a substrate having a <100> crystal orientation. In this embodiment, of a vertical MOSFET, the source region of the device is formed in the silicon substrate and the drain region is formed atop a subsequently formed vertical channel, as will be discussed further. In an alternative embodiment, the drain region is formed in the substrate and the source region is formed atop the vertical channel. The former embodiment is the subject of this description. However, from this description, one skilled in the art can easily form a device in which the drain region is formed in the silicon substrate and the source region is formed overlying the subsequently formed vertical channel.

The depth of the heavily doped source region **205**, the dopant type (e.g., n-type or p-type) and the concentration therein are all matters of design choice. An exemplary source region **205**, wherein the dopant is phosphorous (P), arsenic (As), antimony (Sb) or boron (B) has a dopant concentration in the range of about 1.times.10.sup.19 atoms/cm.sup.3 to about 5.times.10.sup.20 atoms/cm.sup.3. Depths of the source region **205** and the substrate **200** less than about 200 nm are contemplated as suitable.

In FIG. **1**B, five layers of material **210**, **211**, **215**, **216** and **220** are formed over the source region **205** in the silicon substrate **200**. The insulating layer **210** electrically isolates the source region **205** from what will eventually be the overlying gate electrode. Thus, the insulating layer **210** is composed of a material and has a thickness that is consistent with this insulating objective. One example of a suitable material is doped silicon dioxide. The use of a doped insulating layer **210** is advantageous in those embodiments where the insulating layer **210** serves as a dopant source, as will be explained below, to form source/drain extension regions (within the device channel) through a solid phase diffusion process. Examples of a silicon dioxide dopant source are PSG (phospho-silicate glass, i.e., a phosphorous-doped silicon dioxide) and BSG (boro-silicate glass, i.e., a boron-doped silicon dioxide), deposited, for example, by plasma-enhanced chemical vapor deposition (PECVD). Suitable thicknesses for the insulating layer **210** are in the range of about 25 nm to about 250 nm.

An etch stop layer **211** is formed over the insulating layer **210**. An etch stop, as is known to those skilled in the art, is designed to prevent an etch expedient from proceeding to an underlying or overlaying layer or layers. The etch stop there-

fore, has a significantly greater etch resistance to a selected etchant than the adjacent layer or layers that are to be removed by the etchant. Specifically in this case, for the selected etchant, the etch rate of the etch stop layer **211** is much slower than the etch rate of the overlying layer **215**, which, as will be discussed below, is a sacrificial layer. One skilled in the art is aware that the selection of an etch stop layer material is determined by the particular etch expedient used to etch the overlying/underlying layers. In the process of the present invention, where the overlying sacrificial layer is undoped silicon dioxide (e.g., silicon dioxide formed from tetraethylene ortho silicate (TEOS)), an etch stop material that effectively stops etchants for undoped silicon dioxide from penetrating to the layers beneath the etch step layer **211** is selected. Silicon nitride (Si.sub.3N.sub.4) is contemplated as a suitable etch stop material. The thickness of the etch stop material layer is also dependent on the resistance of the etch stop material to the selected etchant, relative to the material depth to be removed through the etch process. That is, to be an effective etch stop, the etchant cannot penetrate the etch stop layer in the time required to remove the desired layer or layers.

The etch stop layer **211** also functions as an offset spacer, where the thickness of the offset spacer is determined by the thickness of the etch stop layer **211**. In the context of the present invention, the offset spacer controls the position of the source/drain extensions relative to the device channel. Specifically, the presence of the offset spacer limits the extent to which the source/drain extensions extend under the gate. One skilled in the art is aware that the farther the source/drain extensions extend under the gate, the greater the adverse consequences on device performance, i.e., the gate/source and gate/drain overlap capacitance increase. One skilled in the art will also appreciate that the offset spacer cannot be so thick as to create a series resistance between the source/drain extensions and the inversion layer formed under the gate, which would also cause unacceptable device performance. The etch stop layer **211** performs the offset spacer function by its presence between the insulating layer **210** and the sacrificial layer **215** when the insulating layer **210** serves as a dopant source. As the dopants diffuse from the insulating layer **210**, the degree of overlap between the source/drain extension and the gate can be controlled through the thickness of the etch stop layer **211** together with control over the dopant diffusion rates.

A sacrificial layer **215** is formed over the etch stop layer **211**. The material of the sacrificial layer **215** has a significantly different etch resistance to the selected etchant than the etch stop layer **211**. Specifically, for the selected etchant, the etch rate of the sacrificial layer **215** is much higher than the etch rate of the etch stop layer **211**. The thickness of the sacrificial layer **215** is selected to correspond to the gate length of the final device, as the sacrificial layer **215** will be removed and the gate of the device formed in the vacated space. Silicon dioxide, formed through a TEOS process, is an example of a suitable semiconductor material for the sacrificial layer **215**.

An etch stop layer **216** is formed over the sacrificial layer **215**. The etch stop layer **216** serves the same functions as the etch stop layer **211**. Therefore, the considerations that govern the selection of the material and thickness for the etch stop layer **211** also govern the selection of the material and thickness for the etch stop layer **216**.

An insulating layer **220** is formed over the etch stop layer **216**. It is advantageous if the insulating layer **220** has the same etch rate (in the selected etchant) as the insulating layer **210**. In fact from the standpoint of processing efficiency, it is advantageous if the material of the insulating layer **210** is the same as the material of the insulating layer **220**. In the embodiment where the insulating layer **220** also serves as a dopant source, the insulating layer **220** is PSG or BSG.

Referring to FIG. **1**C, an opening, trench or window **225** is etched through the insulating layer **210**, the etch stop layer **211**, the sacrificial layer **215**, the etch stop layer **216** and the insulating layer **220**, downwardly to the source region **205**. The window horizontal dimension is determined by the desired device performance characteristics, the size constraints for the device under fabrication, and the limitations of the lithographic process utilized to form the window **225**. The length of the window **225** i.e., the length being orthogonal to both the horizontal and vertical dimensions in the FIG. **1**C cross-section, is largely a matter of design choice. For a given horizontal dimension, the current capacity of the channel to be formed later in the window **225** increases with increasing window length. The window **225** is then subjected to a chemical cleaning process, (e.g., RCA or piranha clean). The piranha process utilizes a sulfuric acid and hydrogen peroxide solution to clean the silicon at the bottom of the window **225**. As a result of this cleaning step, small portions of the insulating layers **210** and **220** forming a boundary with the window **225** are removed. The indentations created are illustrated in FIG. **1**D. As shown, the sacrificial layer **215** and the etch stop layers **211** and **216** extend beyond the edge of the insulating layers **210** and **220**.

Referring to FIG. **1**E, with the source region **205** exposed by the etching process that created the window **225**, monocrystalline silicon can now be epitaxially grown from the source region **205** at the bottom of the window **225** to form device-quality crystalline semiconductor material **230**, including a top portion **221**, in the window **225**. The crystalline semiconductor material **230** is suitable for serving as a channel of the device and for forming source/drain extension regions above and below the channel region. The crystalline semiconductor material **230** may also be formed by depositing an amorphous or polycrystalline material and then recrystallizing the material, e.g., by a conventional furnace anneal or a laser anneal.

The crystalline semiconductor material **230** formed in the window **225** must be doped to form the device channel, as well as the source and drain extensions. Dopants of one type (i.e., n-type or p-type) are introduced into the crystalline semiconductor material **230** to form source and drain extensions and dopants of the opposite conductivity type are introduced to form the channel. A variety of techniques to dope the crystalline semiconductor material **230** are contemplated as suitable. In-situ doping of the crystalline semiconductor material **230** during formation or implantation of dopants into the crystalline semiconductor material **230** after formation are contemplated as suitable processes to form the channel.

One skilled in the art is familiar with the manner in which dopants are introduced in situ as a layer of material is formed via chemical vapor deposition, and such techniques are not described in detail herein. Generally, the dopants are introduced into the atmosphere at the appropriate point in the material deposition process so that the dopants are present in the desired location in the crystalline semiconductor material **230** and at the desired concentration. Appropriate dopant gases include phosphine and diborane. In another embodiment, channel dopants are implanted in the crystalline semiconductor material **230** after formation.

To form the bottom source/drain extensions, dopants can be diffused from the source region **205** into the bottom of the crystalline semiconductor material **230**. An alternate technique for forming the source/drain extensions is diffusion of

the dopants from the insulating layers **210** and **220**, when those layers are formed of PSG or BSG materials as suggested above. Generally, in this solid phase diffusion process, a doped (e.g., with arsenic, phosphorous or boron) oxide (e.g., silicon dioxide) serves as the dopant source. At elevated temperatures, the dopant is driven from the doped oxide to the adjacent undoped (or lightly doped) regions. In this application, the dopant is driven into the crystalline semiconductor material **230**. This technique is advantageous because the doped area, that is the source/drain extensions, are defined by the interface between the crystalline semiconductor material **230** and the insulating layers **210** and **220** that serve as the dopant sources. This technique allows the formation of self-aligned source/drain extensions (i.e. the source drain extensions are aligned with the gate). Examples of solid state diffusion techniques are described in Ono, M., et al, "Sub-50 nm Gate Length N-MOSFETS with 10 nm Phosphorus Source and Drain Junctions," IEDM93, pp. 119-122 (1993) and Saito, M., et al., "An SPDD D-MOSFET Structure Suitable for 0.1 and Sub 0.1 Micron Channel Length and Its Electrical Characteristics," IEDM92, pp. 897-900 (1992), which are hereby incorporated by reference. The dopant concentration in the source/drain extensions **232** and **233** is typically about at least 1.times.10.sup.19/cm.sup.3, with dopant concentrations of about 5.times.10.sup.19/cm.sup.3 contemplated as advantageous. Using this solid phased diffusion technique, very shallow source/drain extensions **232** and **233** are obtainable. The source/drain extensions **232** and **233** are shown as penetrating into the crystalline semiconductor material **230**, preferably less than one half the width of the crystalline semiconductor material **230**. Limiting the dopant penetrations in this manner avoids overlap of the doped regions from opposite sides of the crystalline semiconductor material **230**. Also, the distance that the source/drain extensions **232** and **233** extend under the gate **265** is preferably limited to less than one-fourth of the gate length. As is know to those skilled in the art, the dopants in the source/drain extensions **232** and **233** are of the opposite type from the dopants in the channel of the crystalline semiconductor material **230**.

Preferably, after the crystalline semiconductor material **230** is doped, the device is not subjected to conditions that will significantly affect the distribution of the dopants in the crystalline semiconductor material **230**. Consequently, with this approach after this step the substrate will not be exposed to temperatures that exceed 1100.degree. C. In fact, it is advantageous if the substrate is not exposed to temperatures in excess of 1000.degree. C. after this point in the process. In certain embodiments, the substrate is not exposed to temperatures that exceed 900.degree. C. for prolonged periods of time (e.g. in excess of several minutes). However, the substrate can be subjected to rapid thermal annealing (at temperatures of about 1000.degree. C.) without adversely affecting the distribution of the dopants in the crystalline semiconductor material **230**.

Next a conformal drain layer **235** is formed over the insulating layer **220** and the top portion **231**. The drain layer **235** provides a self-aligned top contact (the drain contact in this embodiment). One example of the suitable material for the drain layer **235** is doped polycrystalline silicon. The selected dopant is opposite in type to that used to form the device channel. The concentration of the dopant is greater than about 1.times.10.sup.20 atoms/cm.sup.3.

As further illustrated in FIG. **1**F, a conformal layer **236** is deposited over the drain layer **235**. The material selected for the layer **236** has an etch rate that is significantly slower than the etch rate of the sacrificial layer **215**, based on the etchant selected to remove the sacrificial layer **215**. It is advantageous if the material selected for the layer **236** is the same as the material of the etch stop layers **211** and **216**. One example of suitable material is silicon nitride.

As shown in FIG. **1**G, using conventional lithographic techniques, the drain layer **235**, the layer **236**, and the insulation layer **220** are patterned (using one or more dry etch steps) so that only those portions overlying or adjacent the crystalline semiconductor material **230** and the top portion **231** remain. The etch stop layer **216** serves to prevent the etch expedients from reaching the underlying layers during this process.

According to another embodiment of the present invention, rather than formed as discussed above, the source/drain extensions **232** and **233** are formed at this point in the process by solid phase diffusion from the doped insulating layers **210** and **220**.

As illustrated in FIG. **1**H, a conformal layer **240** is then deposited over the entire structure. The material for layer **240** is selected to have an etch rate that is significantly slower than the etch rate of the sacrificial layer **215** in the etchant selected to remove the sacrificial layer **215**. One example of a suitable material for the layer **240** is silicon nitride. The thickness of the layer **240** is selected so that the remaining portions of the drain layer **235**, the layer **236**, and the insulating layer **220** are protected from contact with subsequent etchants.

The layer **240** is then etched using an anisotropic etch such as dry plasma etch, which also removes portions of the etch stop layer **216** and the sacrificial layer **215**. As is known to those skilled in the art, an anisotropic etch material etches vertically, but not laterally along the surface. Therefore, as shown in FIG. **1**I, the only portion of the layer **240** that remains after the anisotropic etch is that portion laterally adjacent to the stack of the insulating layer **220** and the drain layer **235** and the layer **236**. As a result of this etch process, a portion of the etch stop layer **216** has been removed and the sacrificial layer **215** is now exposed.

The device is then subjected to a wet etch (e.g., an aqueous hydrofluoric acid) or an isotropic dry etch (e.g., an anhydrous hydrofluoric acid), for removing the remainder of the sacrificial layer **215**. The result is illustrated in FIG. **1**J. The insulating layer **210** is still covered by the etch stop layer **211**. The remaining portion of the etch stop layer **216** and the layers **236** and **240** encapsulate the insulating layer **220** and the drain layer **235**, so that these latter layers remain isolated from contact with the etch expedients. The exposed portion of the crystalline semiconductor material **230** corresponds to the thickness of the sacrificial layer **215** and defines the physical channel length of the device.

Referring to FIG. **1**K, a sacrificial layer of silicon dioxide **245** is thermally grown or deposited on the exposed surface of the crystalline semiconductor material **230**. A sacrificial silicon dioxide thickness on the order of less than about 10 nm is contemplated as suitable. The sacrificial silicon dioxide **245** is then removed (see FIG. **1**L) using a conventional isotropic etch (e.g. an aqueous hydrofluoric acid). As a result of the formation and then the removal of the sacrificial silicon dioxide **245**, the surface of the crystalline semiconductor material **230** is smoother and some of the sidewall defects are removed. The etch stop layers **211** and **216** prevent the removal expedient from contacting the insulating layers **210** and **220** and the drain layer **235**. This step is not necessarily required for the process of the present invention, but can be executed to remove excess sidewall defects if present.

A layer of gate dielectric **250** (also referred to as a gate oxide) is then formed on the exposed portion of the crystalline semiconductor material **230**. Suitable dielectric materials

include, for example, silicon dioxide, silicon oxynitride, silicon nitride or metal oxide. The thickness of the gate dielectric **250** is about 1 nm to about 20 nm. One example of a suitable thickness is 6 nm. In one embodiment, the silicon dioxide layer is formed by heating the substrate to a temperature in the range of about 700.degree. C. to about 1000.degree. C. in an oxygen-containing atmosphere. Other expedients for forming the gate dielectric include chemical vapor deposition, jet vapor deposition or atomic layer deposition, all of which are contemplated as suitable. Conditions for forming the gate dielectric **250** of the desired thickness are well known to those skilled in the art.

Referring to FIG. **1**N, a gate electrode is formed by depositing a gate electrode layer **255** of sufficiently conformal and suitable gate material, e.g. a layer of doped amorphous silicon in which the dopant is introduced in situ. The amorphous silicon is then subsequently re-crystallized (by melting) to form polycrystalline silicon. As mentioned above, this must be accomplished using conditions that do not significantly affect the dopant profiles in the crystalline semiconductor material **230**. Other examples of suitable gate electrode materials include polycrystalline silicon, silicon-germanium and silicon-germanium-carbon. Metals and metal-containing compounds that have a suitably low resistivity and are compatible with the gate dielectric material and the other semiconductor processing steps are also contemplated as suitable gate electrode materials. For CMOS (complementary metal-oxide-semiconductor) applications, it is advantageous if the gate material has a work function near the middle of the band gap of the semiconductor material **230**. Examples of such metals include titanium, titanium nitride, tungsten, tungsten silicide, tantalum, tantalum nitride and molybdenum. Suitable expedients for forming the gate electrode material include chemical vapor deposition, electroplating and combinations thereof. The gate electrode layer **255** also forms the bottom plate of the subsequently formed capacitor, as discussed below.

A poly-nitride-poly (PNP) or a metal-nitride-poly (MNP) capacitor **256** is now formed in a region **257** of the FIG. **1**O structure. The gate electrode layer **255** deposited as described above forms the bottom plate of the capacitor **256**. At this point in the process, the VRG MOSFET is masked off and a silicon nitride layer **258**, serving as the capacitor dielectric, is formed over the gate electrode layer **255** in the region **257**. Because silicon nitride has a higher permittivity than silicon dioxide, higher capacitance values are achievable for the same dielectric thickness. But it is known that any dielectric material can be used as the capacitor dielectric. A conductive layer **259** is formed over the silicon nitride layer **258**. To form a poly-oxide-poly capacitor, the conductive layer **259** is doped polysilicon with a doping concentration of approximately at least 1.times.10.sup.20 cm.sup.-3. To form a metal-nitride-poly capacitor, the conductive layer **259** is formed of a metal material. Following deposition of the conductive layer **259**, it is desirable, but not required, to deposit another nitride layer **260** thereover.

As shown in FIG. **1**P, the MOSFET gate electrode layer **255** is patterned and now referred to as a gate **265**. Similarly, the bottom plate, (i.e., the gate electrode layer **255**) of the capacitor **256** is also patterned and now referred to as a bottom capacitor plate **266**. In a circuit configuration where it is required to connect the MOSFET gate to the capacitor, the gate electrode is not patterned so that the conductive material bridging the MOSFET gate and the bottom capacitor plate remains intact. As shown, if required, a window **267** is etched in the silicon nitride layer **260**, to provide connectivity to the underlying metal or polysilicon layer, referred to generally as a top capacitor plate **259**. The configuration of the MOSFET gate **265** and the bottom capacitor plate **266** are largely matters of design choice. However, it should be noted that the gate **265** surrounds the portion of the crystalline semiconductor material **230** where the gate oxide has been formed. In one embodiment, the bottom capacitor plate **266** can be configured so that access is provided thereto in the third dimension, which is not shown in FIG. **1**P. At this point in the fabrication process the MOSFET has been formed, therefore the crystalline semiconductor material **230** can be referred to as a channel **280**. In another embodiment, illustrated in FIG. **1**Q an insulator **351** is disposed between the gate **265** and the bottom capacitor plate **266**.

In yet another embodiment of the present invention, at this point in the process dopants are driven into the crystalline semiconductor material **230** by solid phase diffusion from the insulating layers **210** and **220** to form source/drain extensions **232** and **233** for the MOSFET device.

In yet another alternative embodiment (not shown) the top portion **231** of the crystalline semiconductor material **230** (see FIG. **1**E) is polished back so that the top portion **231** is co-planar with the top surface of the insulating layer **220**. An expedient such as chemical mechanical polishing is contemplated as suitable and can be accomplished immediately following the formation of the crystalline semiconductor material **230** shown in FIG. **1**E. Polishing back the top portion **231** allows for better control of the diffusions from the insulating layer **220** into the crystalline semiconductor material **230** to form the drain extensions **233**.

In yet another embodiment, a thin layer (e.g., a thickness of about 25 nm) of undoped silicon dioxide is formed over the source region **205**. Referring to FIG. **1**E, this layer (not shown) acts as a barrier to undesirable solid phase diffusion from the insulating layer **210**, (the dopant source), down through the source region **205** and then up into the crystalline semiconductor material **230**.

It is also feasible to construct a polysilicon-oxide-polysilicon (POP) capacitor in conjunction with the fabrication of vertical MOSFET devices. The area utilized for the POP capacitor is significantly smaller than conventional capacitors fabricated on an integrated circuit. Also, the ratio of the capacitor surface area to the chip area for a POP capacitor constructed according to the teaching of the present invention is generally greater than the same ratio for the MNP or PNP capacitors described above. Like the vertical replacement gate MOSFETs described herein, the POP capacitor offers a higher circuit density.

An embodiment of the process for fabricating the VRG MOSFETs and the polysilicon-oxide-polysilicon capacitors is illustrated with reference to FIGS. **2**A through **2**V. The various semiconductor features and regions described therein are preferably composed of silicon, but it is known to those skilled in the art that other embodiments of the invention may be based on other semiconductor materials (including compound or heterojunction semiconductors) alone or in combination. With references to FIGS. **2**A through **2**V, fabrication of the vertical MOSFET device is illustrated in the left portion of the figures and fabrication of the capacitor is illustrated in the right portion of the Figures, although the claims of the present invention are not limited to the formation of a MOSFET device adjacent a POP capacitor.

Referring to FIG. **2**A, a heavily doped source region **305** is formed along a major surface **306** in a silicon substrate **300**, preferably a substrate having a <100> crystal orientation. In this embodiment, of a vertical MOSFET, the source region of the device is formed in the silicon substrate and the drain region is formed atop a subsequently formed vertical channel,

as will be discussed further hereinbelow. In an alternative embodiment, the drain region is formed in the substrate and the source region is formed atop the vertical channel. The former embodiment is the subject of this description. However, from this description, one skilled in the art can easily form a device in which the drain region is formed in the silicon substrate and the source region is formed overlying the subsequently formed vertical channel.

The depth of the heavily doped source region **305**, the concentration of the dopant therein and the type of dopant (e.g., n-type or p-type) are all matters of design choice. An exemplary source region **305**, wherein the dopant is phosphorous (P), arsenic (As), antimony (Sb) or boron (B) has a dopant concentration in the range of about 1.times.10.sup.19 atoms/cm.sup.3 to about 5.times.10.sup.20 atoms/cm.sup.3. Depths of the source region **305** and the substrate **300** less than about 300 nm are contemplated as suitable.

In FIG. **2**B, five layers of material **310**, **311**, **315**, **316** and **320** are formed over the source region **305** in the silicon substrate **300**. The insulating layer **310** electrically isolates the source region **305** from what will eventually be the overlying gate electrode. Thus, the insulating layer **310** is composed of a material and has a thickness that is consistent with this insulating objective. Examples of suitable materials include doped silicon dioxide. The use of doped insulating layer is advantageous because in certain embodiments, the insulating layer **310** serves as a dopant source, as will be explained further hereinbelow to form source/drain extension regions within the channel region of the device through a solid phase diffusion process. One example of a silicon oxide doping source is PSG (phospho-silicate glass, i.e., a phosphorous-doped silicon oxide) or BSG (boro-silicate glass, i.e., a boron-doped silicon oxide). One skilled in the art is aware of suitable expedients for forming a layer of PSG or BSG on a substrate, e.g., plasma-enhanced chemical vapor deposition (PECVD). Suitable thicknesses for the insulating layer **310** are in the range of about 25 nm to about 350 nm.

An etch stop layer **311** is formed over the insulating layer **310**. An etch stop, as is known to those skilled in the art, is designed to prevent an etch expedient from proceeding to an underlying or overlaying layer or layers. The etch stop therefore, has a significantly greater etch resistance to a selected etchant than the adjacent layer or layers that are to be removed. Specifically in this case, for the selected etchant, the etch rate of the etch stop layer **311** is much slower than the etch rate of the overlying layer **315**, which, as discussed below, is a sacrificial layer. One skilled in the art is aware that the selection of the material for an etch stop layer is determined by the particular etch expedient used to etch the overlying/underlying layers. In the process of the present invention, wherein the overlying layer is undoped silicon dioxide (e.g., silicon dioxide formed from tetraethylene ortho silicate (TEOS)), an etch stop material that effectively stops etchants for undoped silicon dioxide from penetrating to the layers beneath the etch stop layer **311** is selected. Silicon nitride (Si.sub.3N.sub.4) is contemplated as a suitable etch stop material. The thickness of the etch stop material layer is also dependent on the resistance of the etch stop material to the selected etchant, relative to the material depth to be removed through the etch process. That is, to be an effective etch stop, the etchant cannot penetrate the etch stop layer in the time required to perform the etching of the layer to be removed.

The etch stop layer **311** also functions as an offset spacer, where the thickness of the offset spacer is determined by the thickness of the etch stop layer **311**. In the context of the present invention, the offset spacer controls the position of the junction of the source/drain extensions and the channel, relative to the gate of the device. Specifically, the presence of the offset spacer prevents the source/drain extensions from extending as far under the gate as they otherwise would extend if the offset spacer was not present. One skilled in the art is aware that the farther the source/drain extensions extend under the gate, the greater probability of adverse consequences on device performance, i.e., the gate/source and gate/drain overlap capacitances increase. One skilled in the art will also appreciate that the offset spacer cannot be so thick so as to create a series resistance between the source/drain extensions and the inversion layer formed in the channel under the gate, as such a series would also cause unacceptable device performance. The etch stop layer **311** performs the offset spacer function by its presence between the insulating layer **310** and the sacrificial layer **315** when the insulating layer **310** serves as a source for dopants. For a given vertical diffusion distance by the dopants from the insulating layer **310**, the degree of overlap between the source/drain extension and the gate can be controlled precisely through the thickness of the etch stop layer **311**, together with control over the dopant diffusion rates.

A sacrificial layer **315** is formed over the etch stop layer **311**. The material of the sacrificial layer **315** has a significantly different etch resistance to the selected etchant than the etch stop layer **311**. Specifically, for the selected etchant, the etch rate of the sacrificial layer **315** is much higher than the etch rate of the etch stop layer **311**. The thickness of the sacrificial layer **315** is selected to correspond to the gate length of the final device, as the sacrificial layer **315** will be removed and the gate of the device formed in the vacated space. Silicon dioxide is an example of a suitable material for the sacrificial layer **315**. The sacrificial layer **315** can be formed through a TEOS process.

An etch stop layer **316** is formed over the sacrificial layer **315**. The etch stop layer **316** serves the same function as the etch stop layer **311**. Therefore, the considerations that govern the selection of the material and thickness for the etch stop layer **311** also govern the selection of the material and thickness for the etch stop layer **316**.

An insulating layer **320** is formed over the etch stop layer **316**. It is advantageous if the insulating layer **320** has the same etch rate (in the selected etchant) as the insulating layer **310**. In fact from the standpoint of processing efficiency, it is advantageous if the material of the insulating layer **310** is the same as the material of the insulating layer **320**. In the embodiment where the insulating layer **320** also serves as a dopant source, the insulating layer **320** is PSG or BSG.

Referring to FIG. **2**C, openings, windows or trenches **325** and **326** are etched through the insulating layer **310**, the etch stop layer **311**, the sacrificial layer **315**, the etch stop layer **316** and the insulating layer **320**, downwardly to the source region **305**. The window horizontal dimension in the FIG. **2**C cross-section is determined by the desired device performance characteristics, the size constraints for the device under fabrication and the limitations of the lithographic process utilized to form the windows **325** and **326**. The length of the windows **325** and **326**, i.e., the length being orthogonal to both the horizontal and vertical dimensions in the FIG. **2**C cross-section, is largely a matter of design choice. For a given horizontal dimension, the current capacity of the channel to be formed later in the window **325**, increases with increasing window length. The dimensions of the window **326** are determined by the desired capacitance value.

The windows **325** and **326** are then subjected to a chemical cleaning process, (e.g., RCA or piranha-clean) to clean the silicon at the bottom of the windows **325** and **326**. As a result of this cleaning step, small portions of the insulating layers

310 and 320 forming a boundary with the windows 325 and 326 are removed. The indentations created are illustrated in FIG. 2D. Thus as shown, the sacrificial layer 315 and the etch stop layers 311 and 316 extend beyond the edge of the insulating layers 310 and 320.

Referring to FIG. 2E, a TEOS layer 327 is deposited over the entire structure. The capacitor region is masked off and the TEOS layer 327 removed (e.g. by conventional etching) from the MOSFET region shown in the left side of the structure.

As shown in FIG. 2F, the window 325 is filled with a crystalline semiconductor material 330 (e.g., silicon) including a top portion 331. Other examples of crystalline semiconductor materials that can be utilized includes silicon-germanium and silicon-germanium-carbon. The crystalline semiconductor material 330 may be formed in an undoped or lightly doped state, with completion of the doping process occurring later. Techniques for forming crystalline semiconductor material in a window are well known to one skilled in the art. For example, the crystalline semiconductor material can be formed in the window 325 by epitaxial growth from the source region 305 to form device-quality silicon material. In another embodiment, amorphous silicon can be deposited over the entire substrate 300 and all but the crystalline semiconductor material 330 and a top portion 331 is removed. The amorphous semiconductor material is then annealed to recrystallize it. In yet another embodiment the top portion 331 is removed by chemical/mechanical polishing of the exposed surface immediately after formation of the crystalline semiconductor material.

The crystalline semiconductor material 330 formed in the window 325 must be doped to form the device channel, as well as the source and drain extensions. Dopants of one type (i.e., n-type or p-type) are introduced into the crystalline semiconductor material 330 to form the channel. A variety of techniques to dope the crystalline semiconductor material 330 are contemplated as suitable. In-situ doping of the crystalline semiconductor material 330 during formation or implantation of dopants into the crystalline semiconductor material 330 after formation, are contemplated as suitable processes. Dopants can be diffused from the source region 335 into the bottom of the crystalline semiconductor material 330 to form the source/drain extensions or they can be formed through solid phase diffusion from an adjacent doped layer, such as the doped insulating layers 310 and 320. As discussed above, the solid phase diffusion step can be executed at several different points in the fabrication process according to the present invention.

Preferably, after the crystalline semiconductor material 330 is doped and the dopants distributed therein in the desired manner, the device should not be subjected to conditions that can significantly affect the dopant distribution in the crystalline semiconductor material 330. Consequently, with this approach after this step, the substrate is not exposed to temperatures that exceed 1100.degree. C. In fact, it is advantageous if the substrate will not be exposed to temperatures in excess of 1000.degree. C. after this point in the process. In certain embodiments, the substrate is not exposed to temperatures that exceed 900.degree. C. for prolonged periods of time (e.g. in excess of several minutes). However, the substrate can be subjected to rapid thermal annealing (at temperatures of about 1000.degree. C.) without adversely affecting the distribution of the dopants in the crystalline semiconductor material 330.

The next several fabrication steps focus on fabrication of the POP capacitor. However, it is known by those skilled in the art that these fabrication steps can be inserted at other points in the VRG fabrication process. The TEOS layer 327 is removed by masking and etching and, as shown in FIG. 2G, a doped polysilicon layer 332 is formed over the structure, including in the window 326. In the region of the MOSFET, the doped polysilicon will form either a source or a drain region for the device; in the region of the POP capacitor, the polysilicon layer 332 forms one plate of the capacitor. More generally, the layer 332 must be conductive and thus, a metal or metal-containing material may be used in lieu of doped polysilicon for the material of the layer 332.

In the fabrication step represented in FIG. 2H, a layer of silicon dioxide 333 is conformally deposited over the polycrystalline layer 332. Referring to FIG. 2I, a doped polysilicon layer 334 is deposited over the entire structure, including filling the remaining void in the capacitor window 326. After a chemical-mechanical polishing step, the structure appears as in FIG. 2J, with the oxide layer 333 disposed between the polysilicon layers 332 and 3341 forming a polysilicon-oxide-polysilicon (POP) capacitor in the window 326. At this point, the crystalline semiconductor material 330 for the MOSFET remains in the window 325.

The MOSFET is masked, and as shown in FIG. 2K, a layer of silicon nitride 335 is deposited over the capacitor window 326 to isolate the POP capacitor from additional fabrication steps that could short the polysilicon layers 332 and 334. Vias will be formed later in the silicon nitride layer 335 to access the capacitor plates. The polysilicon layer 331, forming the second plate of the POP capacitor may also be accessed in the third dimension, outside the plane of the FIG. 2K cross-section. Because the POP capacitor is created in a trench of the semiconductor substrate 300, the ratio of the surface area of the capacitor to the chip area occupied by the capacitor is much greater than this ratio for the MNP or PNP capacitors discussed above and for the prior art integrated circuit capacitors. Thus, in terms of area utilization, the POP capacitor is a more efficient device.

At this point in the exemplary fabrication process, processing returns to the VRG MOSFET device, beginning with FIG. 2L. The POP capacitor is masked such that it is unaffected by the following VRG MOSFET process steps. A conformal drain layer 336 is formed over the insulating layer 320. The drain layer 336 provides a self-aligned top contact (the drain contact in this embodiment). One example of the suitable material for the drain layer 336 is doped polycrystalline silicon. The selected dopant is opposite in type to that used to dope the silicon channel. The concentration of the dopant in the drain layer 336 is greater than about 1.times.10.sup.20 atoms/cm.sup.3.

As further illustrated in FIG. 2L, a conformal layer 337 is deposited over the drain layer 336. The material selected for the layer 337 has an etch rate that is significantly slower than the etch rate of the sacrificial layer 315, based on the etchant selected to remove the sacrificial layer 315. It is advantageous if the material selected for the layer 337 is the same as the material of the etch stop layers 311 and 316. One example of suitable material is silicon nitride.

As shown in FIG. 2M, using conventional lithographic techniques the drain layer 336, the layer 337, and the insulation layer 320 are patterned (using one or more dry etch steps) so that only those portions overlying or adjacent the crystalline semiconductor material 330 remain.

In one embodiment, the solid phase diffusion step is performed at this point in the process to form the source/drain extensions 332 and 333.

As illustrated in FIG. 2N, a conformal layer 340 is then deposited over the MOSFET region of the structure. The material for layer 340 is selected to have an etch rate that is

significantly slower than the etch rate of the sacrificial layer **315**, in the etchant selected to remove the sacrificial layer **315**. One example of a suitable material for the layer **340** is silicon nitride. The thickness of the layer **340** is selected so that the remaining portions of the drain layer **336**, the layer **337** and the insulating layer **320** are protected from contact with subsequent etchants.

The layer **340** is then etched using an anisotropic etch such as dry plasma etch, which also removes a portion of the etch stop layer **316**. As is known to those skilled in the art, an anisotropic etch material etches vertically, but not laterally along the surface. As shown in FIG. **2**O, the only portion of the layer **340** that remains after the anisotropic etch is that portion laterally adjacent to the stack of the insulating layer **320** and the drain layer **336** and the layer **337**. The sacrificial layer **315** is now exposed and also reduced somewhat in the vertical dimension.

The mask is now removed from the POP capacitor region and the entire substrate is subjected to a wet etch (e.g., an aqueous hydrofluoric acid) or an isotropic dry etch (e.g., an anhydrous hydrofluoric acid), which removes the remaining portion of the sacrificial layer **315** in both the MOSFET region and in the POP capacitor region. The result is illustrated in FIG. **2**P. The insulating layer **310** is still covered by the etch stop layer **311**, and the exposed portion of the etch stop layer **316** and the layers **337** and **340** encapsulate the insulating layer **320** and the drain layer **336**, so that these layers remain isolated from contact with subsequent etch expedients. Also the etch stop layer **316** protects the overlying insulator layer **320** in the POP capacitor region. The exposed portion of the crystalline semiconductor material **330** corresponds to the thickness of the sacrificial layer **315** and defines the physical channel length of the MOSFET device.

The POP capacitor region is masked again and as shown in FIG. **2**Q, a sacrificial layer of thermal silicon dioxide **345** is grown on the exposed surface of the crystalline semiconductor material **330** in the MOSFET region. A sacrificial silicon dioxide thickness on the order of less than about 10 nm is contemplated as suitable. The sacrificial silicon dioxide **345** is then removed (see FIG. **2**R) using a conventional isotropic etch (e.g. an aqueous hydrofluoric acid). As a result of the formation and then the removal of the sacrificial silicon dioxide **345**, the surface of the crystalline semiconductor material **330** is smoother and some of the side wall defects are removed. This step is not required according to the present invention, but may be advantageous if there are excessive defects in the crystalline semiconductor material **330**. The etch stop layers **311** and **316** prevent the expedient from contacting the insulating layers **310** and **320** and the drain layer **336** during this process step.

As shown in FIG. **2**S, a layer of gate dielectric **350** (or gate oxide) is formed on the exposed portion of the crystalline semiconductor material **330**. Suitable dielectric materials include, for example, silicon dioxide, silicon oxynitride, silicon nitride or metal oxide. The thickness of the gate dielectric **350** is about 1 nm to about 30 nm. One example of a suitable thickness is 6 nm. In one embodiment, the silicon dioxide layer is formed by heating the substrate to a temperature in a range of about 700.degree. C. to about 1000.degree. C. in an oxygen-containing atmosphere. Other expedients for forming the gate dielectric include chemical vapor deposition, jet vapor deposition or atomic layer deposition, all of which are contemplated as suitable. Conditions for forming the gate dielectric **350** of the desired thickness are well known to those skilled in the art.

Referring to FIG. **2**T, a gate electrode is formed by depositing a gate electrode layer **355** of sufficiently conformal and suitable gate material, e.g., a layer of doped amorphous silicon in which the dopant is introduced in situ and then subsequently re-crystallized to form polycrystalline silicon. As mentioned above, this must be accomplished using conditions that do not significantly affect the dopant profiles of the dopants in the crystalline semiconductor material **330**. Other examples of suitable gate electrode materials include polycrystalline silicon, silicon-germanium and silicon-germanium-carbon. Metals and metal-containing compounds that have a suitably low resistivity and are compatible with the gate dielectric material and the other semiconductor processing steps, are also contemplated as suitable gate electrode materials. For CMOS applications, it is advantageous if the gate material has a work function approximately near the middle of the band gap of the crystalline semiconductor material **330**. Examples of such metals include titanium, titanium nitride, tungsten, tungsten silicide, tantalum, tantalum nitride and molybdenum. Suitable expedients for forming the gate electrode material include chemical vapor deposition, electroplating and combinations thereof.

According to the structure illustrated in FIG. **2**T, the MOSFET gate is connected to one plate of the POP capacitor by way of the gate electrode layer **355**. Although this may be desirable in some circuit configurations, in those where it is not, an insulative layer, for example a silicon dioxide trench, may be formed to isolate that portion of the gate electrode layer **355** adjacent the polysilicon layer **332** of the POP capacitor from that adjacent the gate dielectric **350** of the MOSFET device. Such a trench **351** is illustrated in FIG. **2**T. Those skilled in the art are familiar with the process for forming such a trench. Alternatively, the segment of the gate electrode layer bridging the MOSFET gate and the POP capacitor plate can be removed by patterning and etching.

Referring to FIG. **2**U, the gate electrode layer **355** is patterned (which is a matter of design choice) to form a gate **365** of the MOSFET device. The gate electrode layer **355** in the POP capacitor region bears reference character **366**. The gate **365** surrounds the crystalline semiconductor material **330** and the gate oxide **350** formed thereon. A window **370** is etched in the capacitor nitride layer **335** to access the polysilicon, which serves as one capacitor plate. The polysilicon layer **382**, forming the other capacitor plate, is accessed by a via **371** formed in both silicon nitride layers **316** and **335**.

FIG. **2**V shows the finished MOSFET and POP capacitor devices. If not executed earlier in the process, the dopants are now driven into the crystalline semiconductor material **330** by solid phase diffusion from the insulating layers **310** and **320** to form the source/drain extensions **332** and drain.

In yet another embodiment, a conductor **380** illustrated in FIG. **2**W connects the gate **365** to the capacitor plate **332**.

In yet another embodiment of the present invention, a thin layer (e.g., a thickness of about 25 nm) of undoped silicon dioxide is formed over the source layer **305**. Referring to FIG. **2**E, this layer (not shown) acts as a barriers to undesirable solid phase diffusion from the insulating layer **310**, (the dopant source), down through the source layer **305** and then up into the crystalline semiconductor material **330**.

An architecture and process have been described for providing various capacitor structures on an integrated circuit, especially an integrated circuit comprising one or more vertical replacement gate MOSFETs. While specific applications of the invention have been illustrated, the principals disclosed herein provide a basis for practicing the invention in a variety of ways and in a variety of circuit structures, including circuit structures formed with Group III-IV compounds and other semiconductor materials. Although the exemplary embodiments pertain to vertical replacement gate CMOS-

FETs, numerous variations are contemplated. These includes structures comprising vertical bipolar transistor devices, diodes and, more generally, diffusion regions in conjunction with the capacitor architectures described herein. Still other constructions not expressly identified herein do not depart from the scope of the invention, which is limited only by the claims that follow.

The invention claimed is:

1. An integrated circuit structure comprising:

a semiconductor layer having a major surface formed along a plane having first and second areas;

a first doped region of a first conductivity type in the first area of the surface;

multiple layers over the first doped region in the first area and over the second area, wherein the multiple layers have a first window therein extending to the first doped region and a second window in the second area, the second window comprising sidewall and bottom surfaces;

a second doped region of a second conductivity type in the window formed in the first area;

a third doped region of the first conductivity type over the second doped region in the first area;

a gate oxide adjacent the second doped region in the first area;

a first conductive layer with first and second electrically continuous portions, each of which is laterally disposed in the respective first and second areas, wherein the first electrically continuous portion is adjacent the gate oxide in the first area;

within the second window a second conductive layer substantially conformal with the sidewall surfaces and the bottom surfaces in the window and electrically connected to the second electrically continuous portion of the first conductive layer;

a conformal dielectric layer within the second window and over the second conductive layer; and

a third conductive layer over the dielectric layer, such that the third conductive layer, the dielectric layer and the second conductive layer form a capacitor.

2. The integrated circuit structure of claim **1** wherein the first and second electrically continuous portions of the first conductive layer are separated by a dielectric layer that separates the first and second areas.

3. The integrated circuit structure of claim **1** wherein the first and second electrically continuous portions of the first conductive layer are joined by a fourth electrically conductive layer.

4. The integrated circuit structure of claim **1** wherein an insulating layer is formed over the third conductive layer with a window formed therein to provide electrical access to the third conductive layer.

5. The integrated circuit structure of claim **4** wherein the insulating layer is silicon nitride.

* * * * *

UNITED STATES PATENT AND TRADEMARK OFFICE

CERTIFICATE OF CORRECTION

PATENT NO. : 7,911,006 B2
APPLICATION NO. : 12/610733
DATED : March 22, 2011
INVENTOR(S) : Samir Chaudhry et al.

It is certified that error appears in the above-identified patent and that said Letters Patent is hereby corrected as shown below:

On the Title Page, Item (74) after Primary Examiner, insert
--*Attorney, Agent, or Firm* — Lerner, David, Littenberg, Krumholz & Mentlik, LLP--.

Column 16, line 12, after "steps" delete ",".

Signed and Sealed this
Twenty-eighth Day of February, 2012

David J. Kappos

David J. Kappos
Director of the United States Patent and Trademark Office