US007595213B2

(12) **United States Patent**
Kwon et al.

(10) **Patent No.: US 7,595,213 B2**
(45) **Date of Patent: Sep. 29, 2009**

(54) **SEMICONDUCTOR DEVICES, CMOS IMAGE SENSORS, AND METHODS OF MANUFACTURING SAME**

(75) Inventors: **Doo-Won Kwon**, Seongnam-si (KR); **Jong-Ryeol Yoo**, Osan-si (KR); **Chang-Rok Moon**, Seoul (KR)

(73) Assignee: **Samsung Electronics Co., Ltd.**, Suwon-Si (KR)

(*) Notice: Subject to any disclaimer, the term of this patent is extended or adjusted under 35 U.S.C. 154(b) by 335 days.

(21) Appl. No.: **11/517,238**

(22) Filed: **Sep. 7, 2006**

(65) **Prior Publication Data**

US 2007/0141801 A1 Jun. 21, 2007

(30) **Foreign Application Priority Data**

Dec. 15, 2005 (KR) 10-2005-0124112

(51) **Int. Cl.**
H01L 21/00 (2006.01)

(52) **U.S. Cl.** **438/60**; 438/400

(58) **Field of Classification Search** 438/60, 438/400

See application file for complete search history.

(56) **References Cited**

U.S. PATENT DOCUMENTS

4,861,729	A *	8/1989	Fuse et al.	438/246
2004/0251398	A1	12/2004	Mouli et al.	250/214.1
2005/0045926	A1	3/2005	Mouli	
2005/0176167	A1 *	8/2005	Lee	438/60
2006/0038252	A1 *	2/2006	Mouli	257/446
2007/0210305	A1 *	9/2007	Kim et al.	257/43

FOREIGN PATENT DOCUMENTS

JP	10-233497	9/1998
KR	1020030001795	1/2003
KR	1020030054020	7/2003
KR	1020040059943	7/2004
KR	1020050062143	6/2005

* cited by examiner

Primary Examiner—Bradley K Smith
(74) *Attorney, Agent, or Firm*—F. Chau & Assoc., LLC

(57) **ABSTRACT**

A semiconductor device includes: a trench device isolating region formed in a substrate to define a photodiode active region; a channel stop impurity region formed in the substrate contacting the device isolating region, wherein the channel stop impurity region surrounds a bottom and a sidewall of the device isolating region; and a photodiode formed within the photodiode active region.

7 Claims, 8 Drawing Sheets

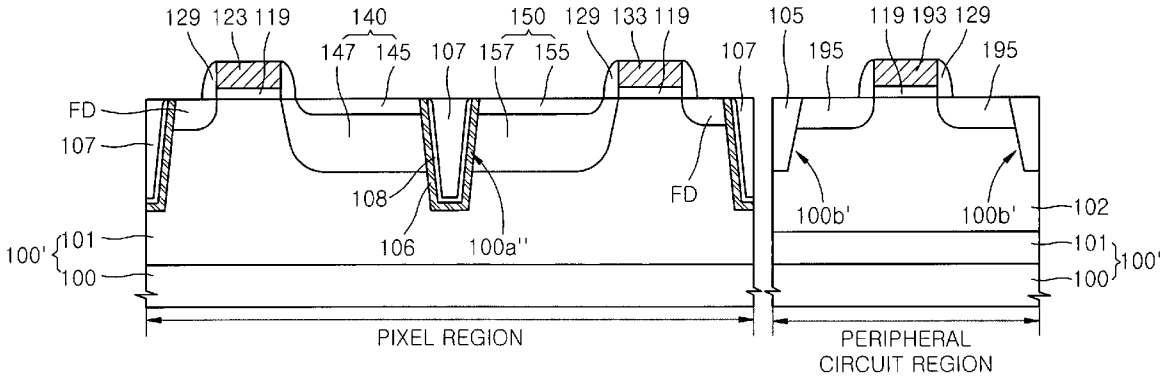

FIG. 1

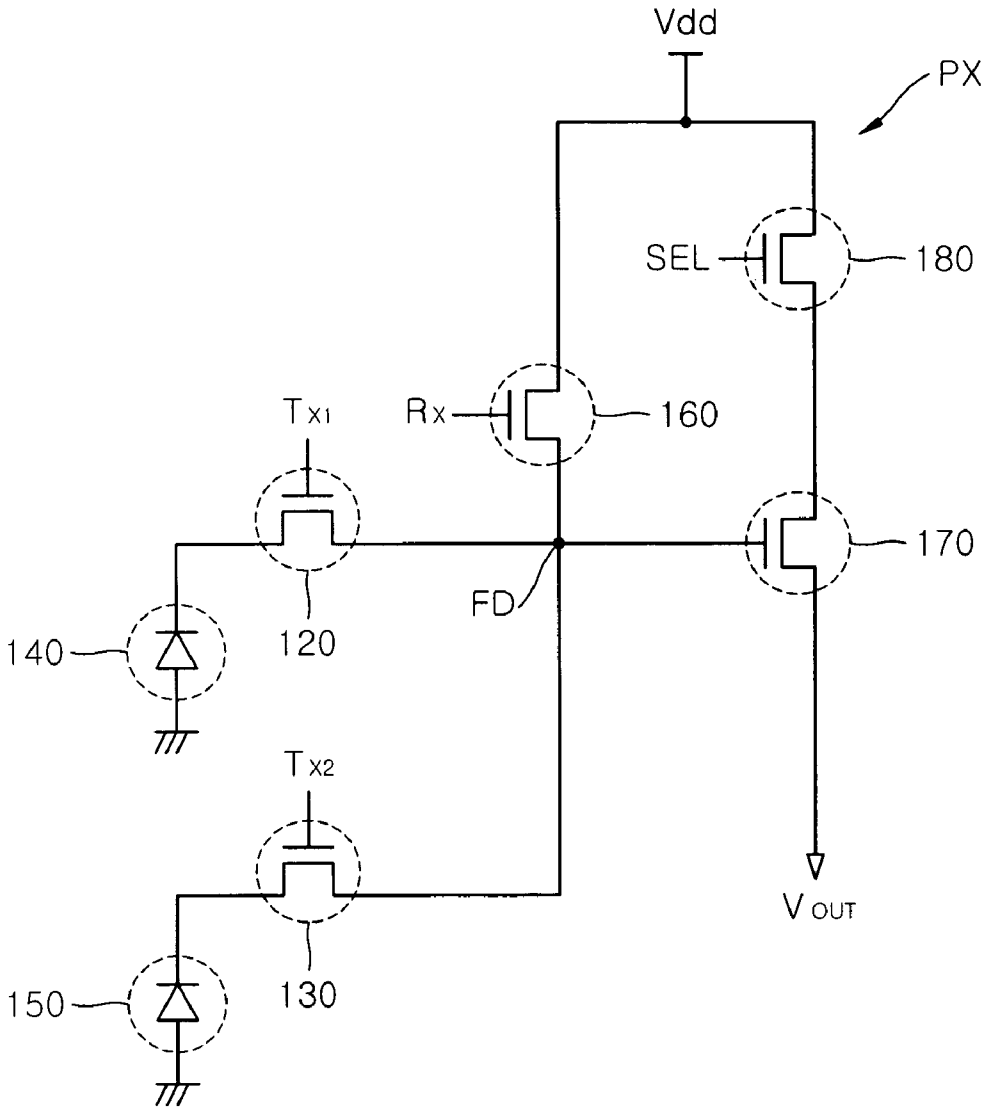

FIG. 2

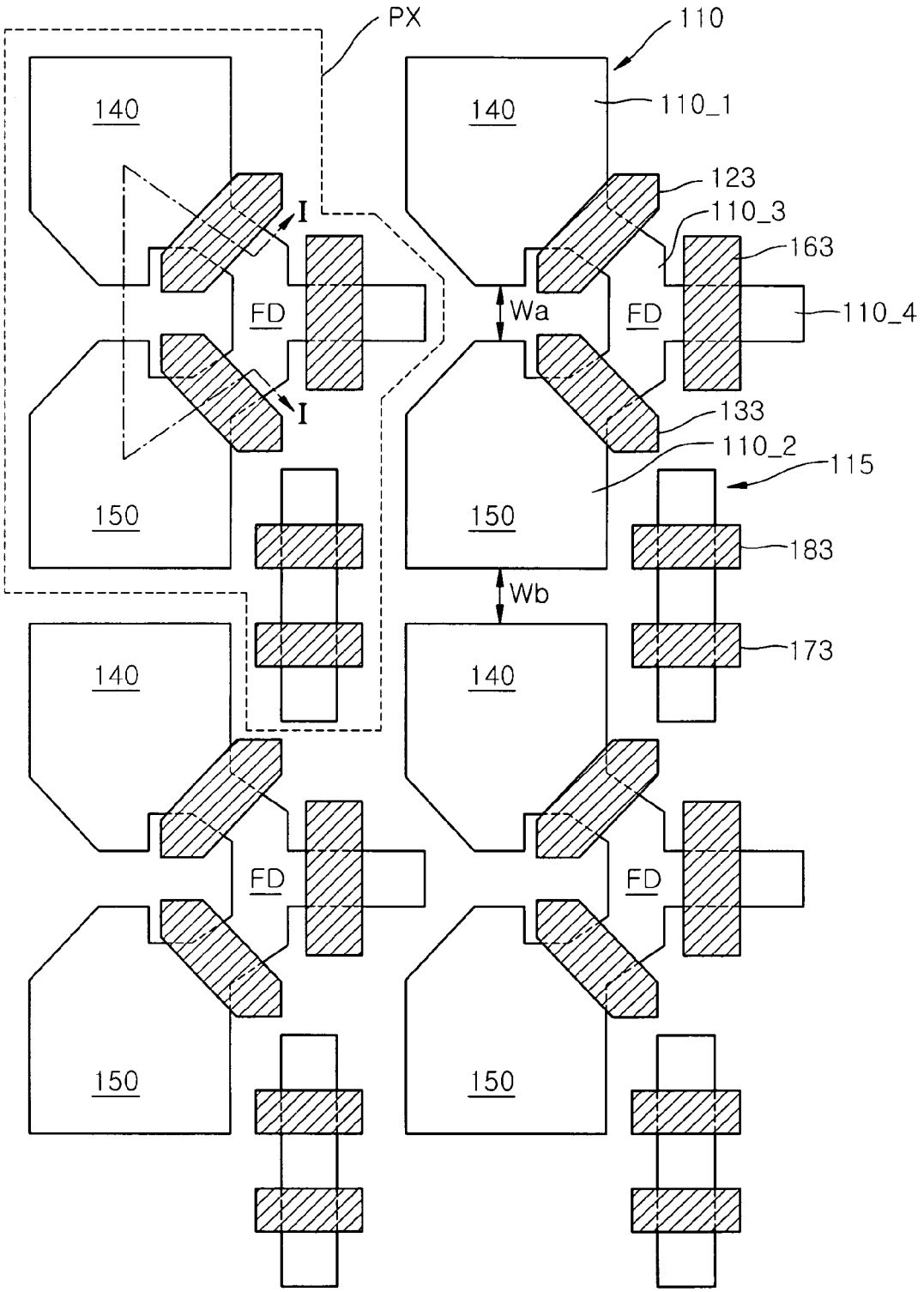
PX
110
140
110_1
123
110_3
163
I
FD
Wa
110_4
133
110_2
115
150
183
Wb
173

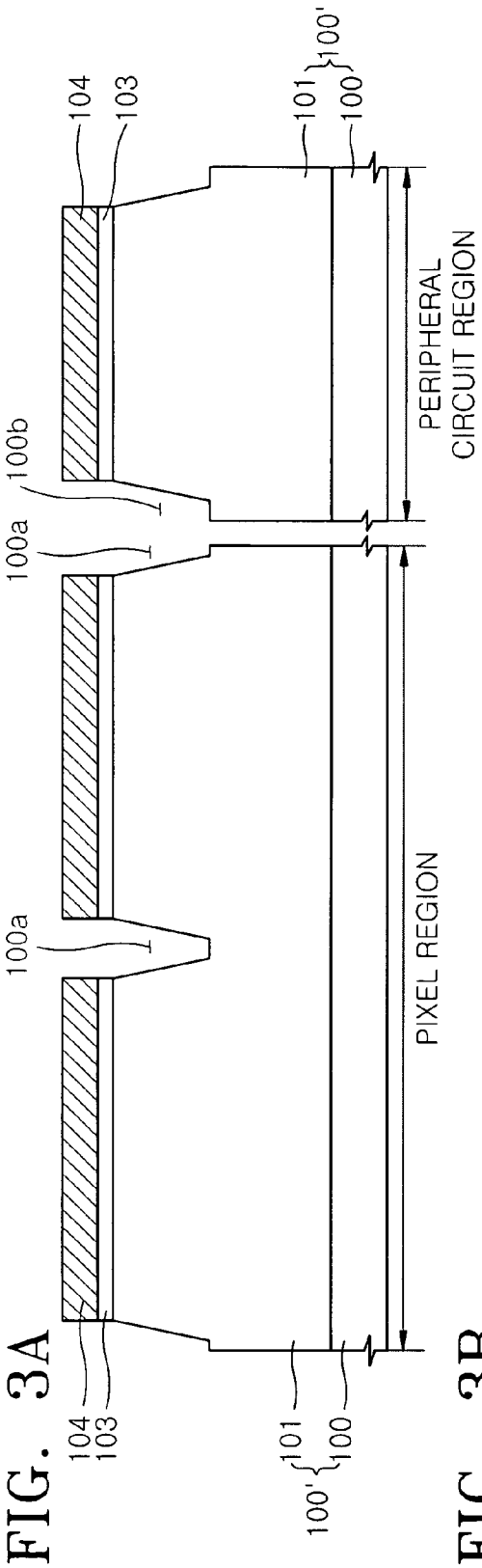
104
103
101
100
100'
100b
100a
PERIPHERAL CIRCUIT REGION
PIXEL REGION

FIG. 3A

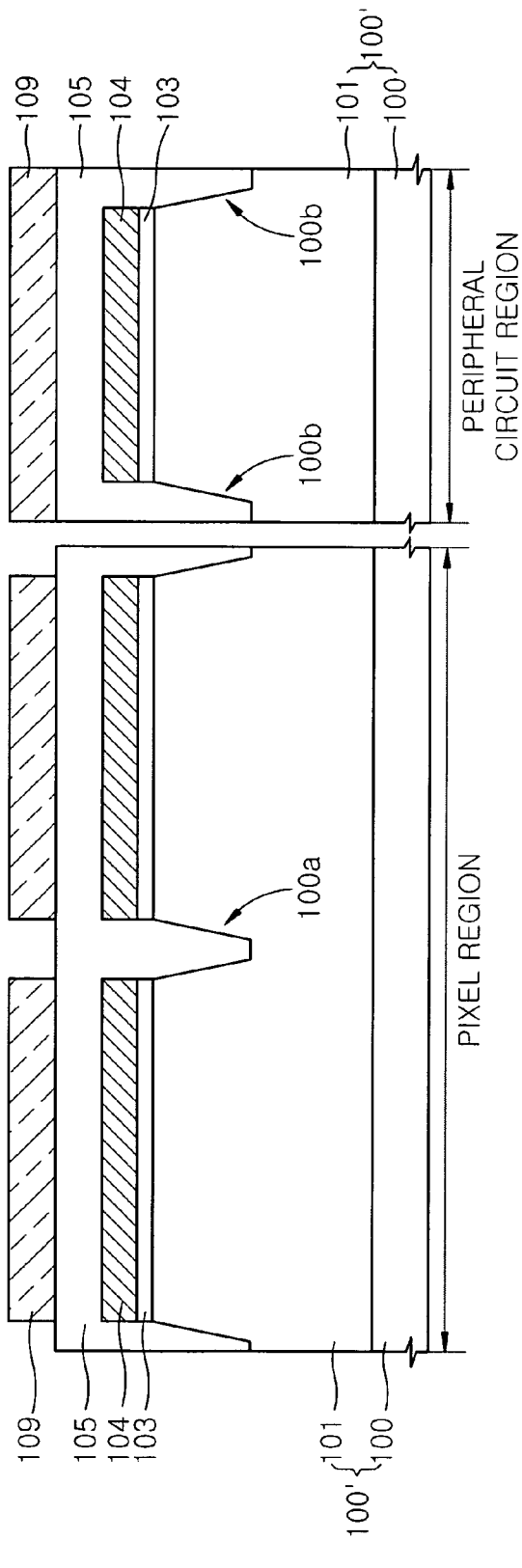
109
105
104
103
101
100
100'
100b
100a
PERIPHERAL CIRCUIT REGION
PIXEL REGION

FIG. 3B

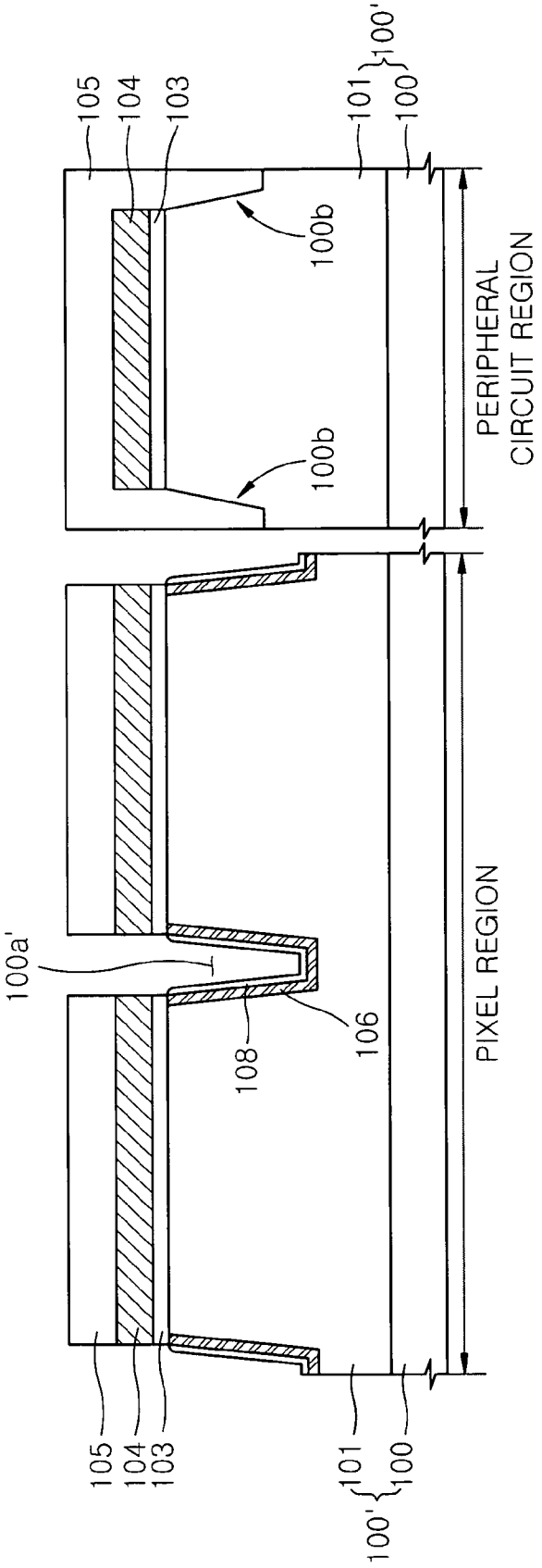
105
104
103
101
100'
100
100b
100b
PERIPHERAL CIRCUIT REGION
100a'
108
106
PIXEL REGION
105
104
103
101
100
100'

FIG. 3C

FIG. 3D

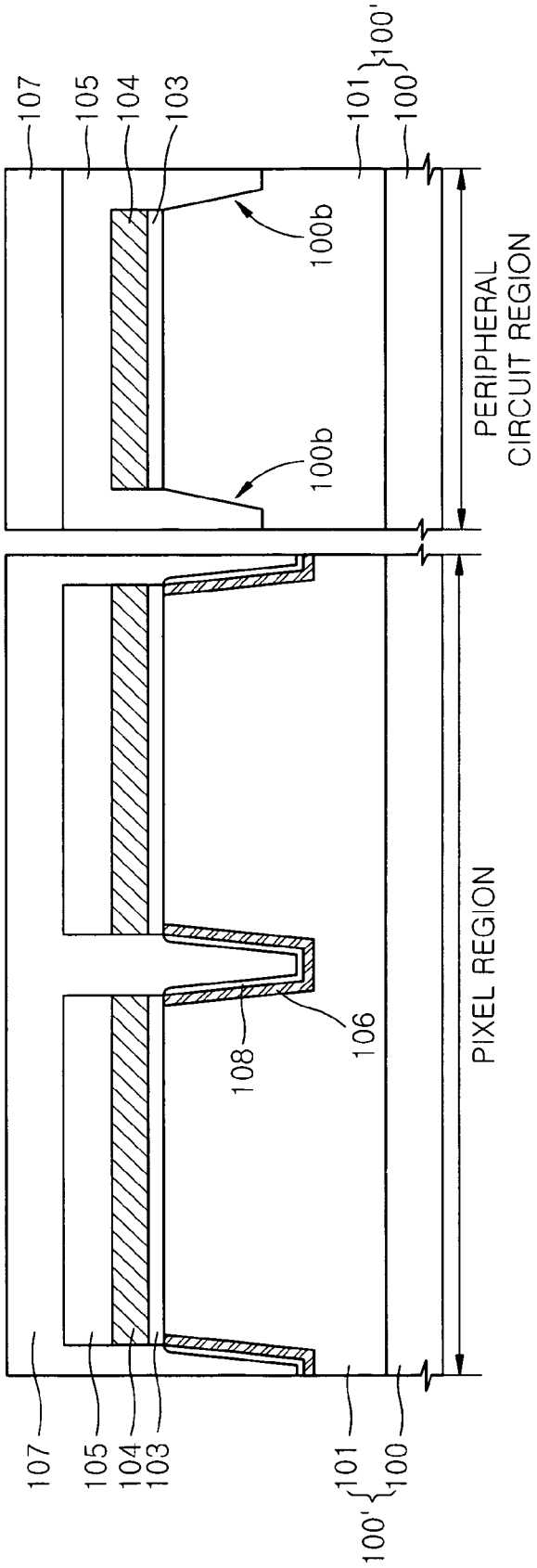
107
105
104
103
101
100
100'
100b
100b
PERIPHERAL CIRCUIT REGION
108
106
PIXEL REGION
107
105
104
103
101
100
100'

FIG. 3E

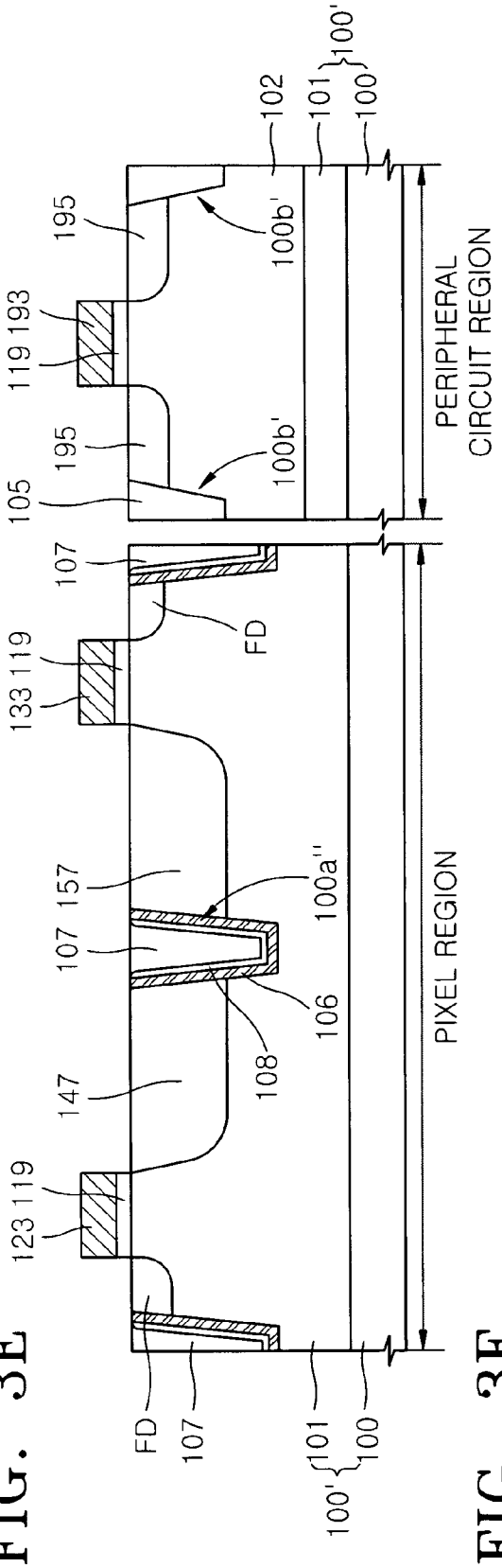
102
101
100
100'
195
100b'
119 193
195
100b'
105
PERIPHERAL CIRCUIT REGION
107
FD
133 119
157
100a''
107
106
108
147
123 119
PIXEL REGION
FD
107
101
100
100'

FIG. 3F

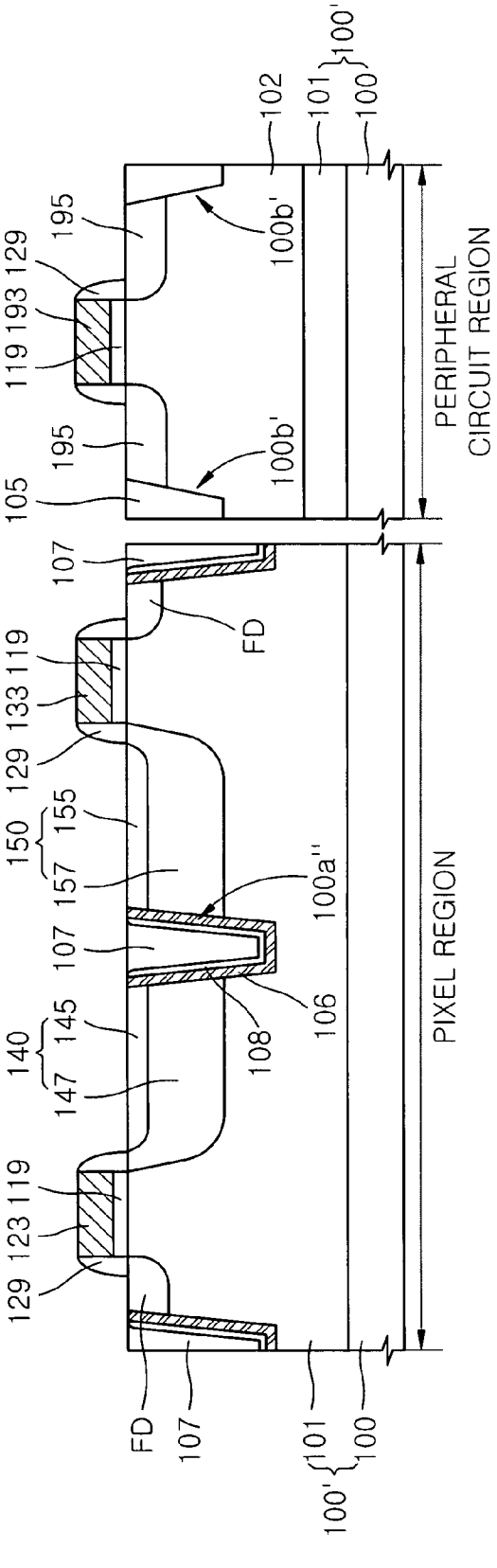
102
101
100
100'
195
100b'
119 193 129
195
100b'
105
PERIPHERAL CIRCUIT REGION
107
FD
133 119
129
150
155
157
100a''
107
106
108
140
145
147
123 119
129
PIXEL REGION
FD
107
101
100
100'

FIG. 4

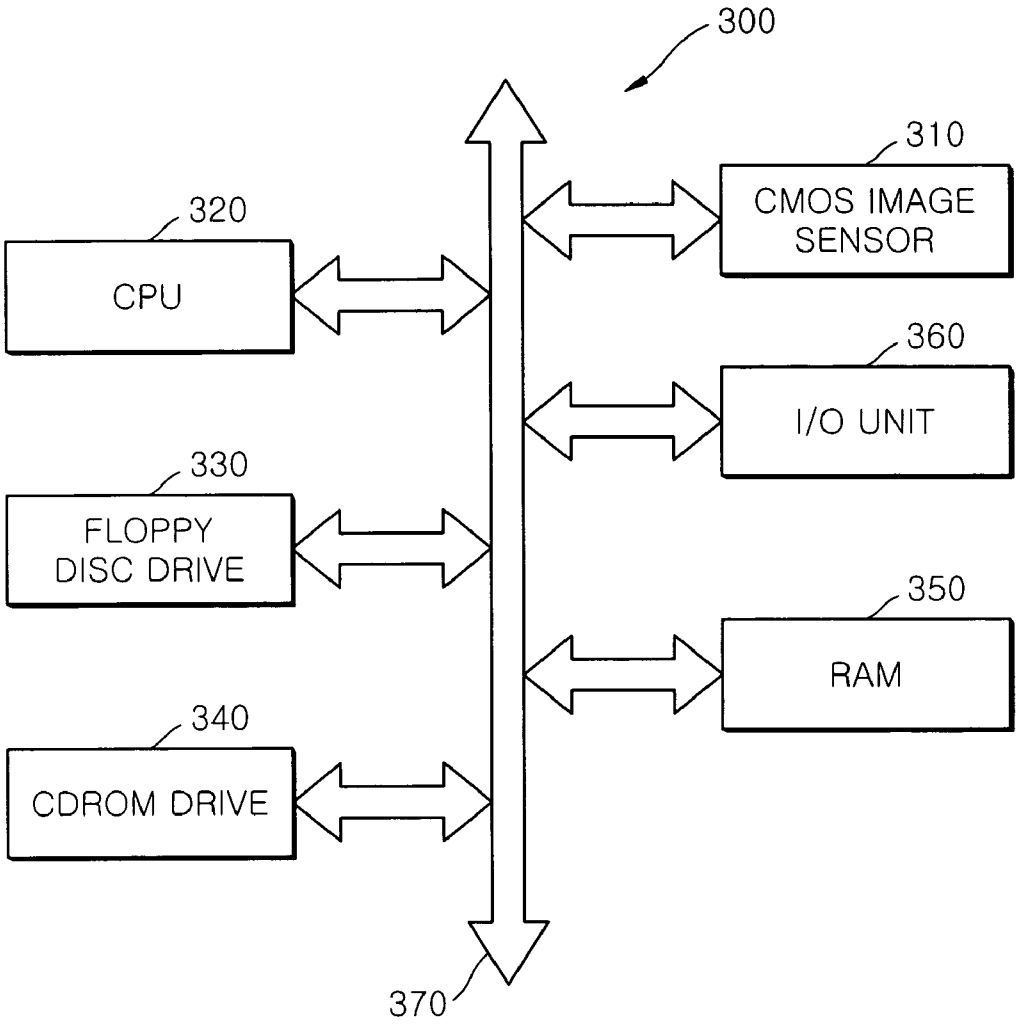
300
310
CMOS IMAGE SENSOR
320
CPU
360
I/O UNIT
330
FLOPPY DISC DRIVE
350
RAM
340
CDROM DRIVE
370

FIG. 5

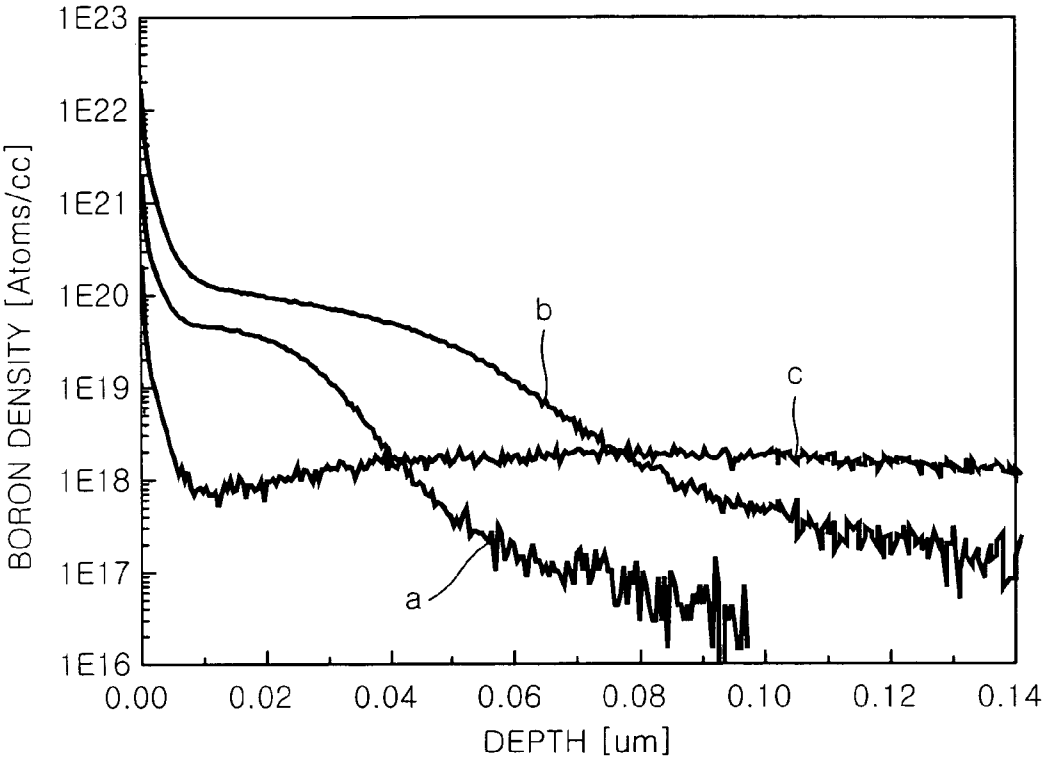
1E23
1E22
1E21
1E20
1E19
1E18
1E17
1E16
BORON DENSITY [Atoms/cc]
0.00
0.02
0.04
0.06
0.08
0.10
0.12
0.14
DEPTH [um]
a
b
c

FIG. 6

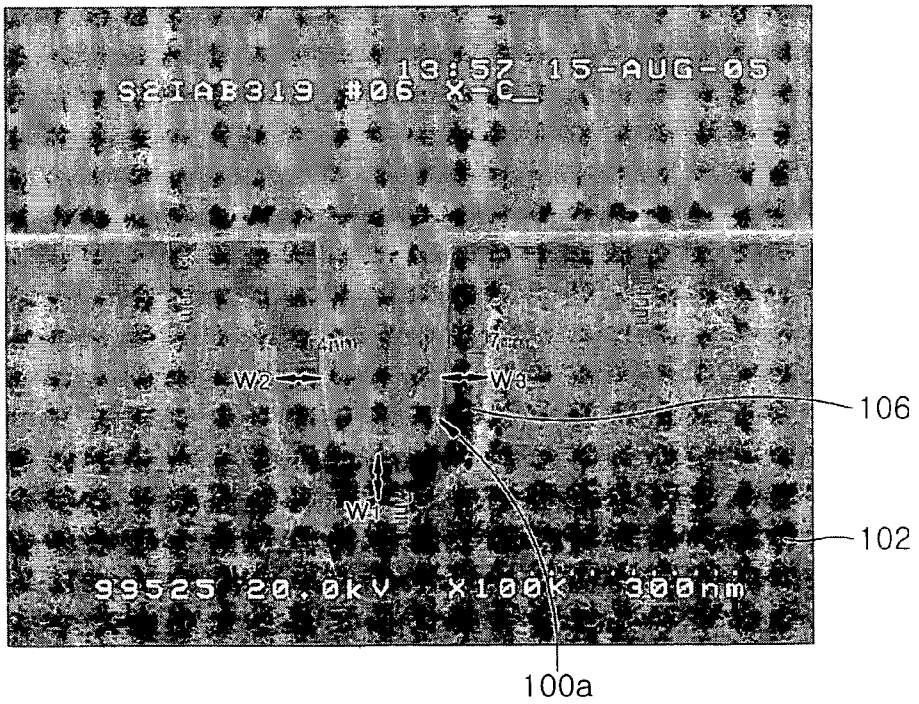
13:57 15-AUG-05
S2IAB319 #06 X-C_
W2
W3
W1
99525 20.0kV X100k 300nm
106
102
100a

SEMICONDUCTOR DEVICES, CMOS IMAGE SENSORS, AND METHODS OF MANUFACTURING SAME

CROSS-REFERENCE TO RELATED PATENT APPLICATION

This application claims priority to Korean Patent Application No. 10-2005-0124112, filed on Dec. 15, 2005, the disclosure of which is herein incorporated by reference in its entirety.

BACKGROUND OF THE INVENTION

1. Technical Field

The present disclosure relates to semiconductor devices, image sensors, and methods of manufacturing the same and, more particularly, to semiconductor devices having a trench, CMOS image sensors having a trench, and methods of manufacturing semiconductor devices and the CMOS image sensors.

2. Discussion of the Related Art

Image sensors are semiconductor devices that convert optical images into electrical signals. Image sensors can be classified into Charge Coupled Device (CCD) image sensors and CMOS Image Sensors. A CMOS image sensor includes a photodiode that receives optical signals and a MOS transistor that controls the optical signals within a unit pixel. The CCD image sensor has a complicated driving system and a complicated manufacturing process. Signal processing circuits are difficult to fabricate in one CCD chip. In contrast, the CMOS image sensor can be manufactured by standard CMOS techniques, and can be integrated into a single circuit together with other signal processing circuits.

CMOS image sensor fabrication includes forming a device isolating layer on a silicon substrate to define the photodiode active regions and MOS transistor active regions. A CMOS image sensor may exhibit crystalline defects such as dangling bond at an interfacial surface between the device isolating layer and the substrate of the photodiode active region. For example, when the device isolating layer has a Shallow Trench Isolation (STI) structure, such as a trench formed by etching the substrate and filled with an insulating layer, crystalline defects may occur when etching the substrate. The crystalline defects, which act as traps capturing electrons, may become defect or noise components of each pixel, increasing the dark current, i.e., the current that continues to flow in the photodiode when there is no incident light. Thus the crystalline defects of the device isolation region can degrade the imaging characteristics of the CMOS image sensor.

Forming an impurity region within a lower portion of the trench using ion implantation is difficult. Because the ion beam used for ion implantation has forward directivity, the impurity region is mostly formed under the trench without surrounding the sides of the trench. The ion beam or substrate may be tilted during the implantation process so that the impurity region is formed on the sides of the trench, but with no impurity region formed under the trench. A crystalline defect occurring in the interfacial surface of a trench that is not surrounded by an impurity region may generate the dark current. As semiconductor devices become ever more highly integrated, the trenches are further deepened and narrowed. In such case, it becomes more difficult to form the impurity region by ion implantation to surround the trench. As a result, the dark current may be increased.

Moreover, because ion implantation is performed under a relatively high energy condition, the impurity region is generally thickly formed. This is apt to shrink the depletion region of the photodiode formed adjacent to the trench, which may decrease the saturation current of the photodiode.

SUMMARY OF THE INVENTION

According to an exemplary embodiment of the present invention, a method of manufacturing a semiconductor device includes: forming a trench in a substrate to define a photodiode active region; doping an impurity into a bottom and a sidewall of the trench to form a channel stop impurity region, wherein the channel stop impurity region surrounds the bottom and the sidewall of the trench; forming a trench device isolating region by forming a gap-filling material layer into the impurity-doped trench; and forming a photodiode in the photodiode active region. The doping step may be performed by plasma doping.

The plasma doping may be performed using at least one of a dopant gas or a dilution gas.

The trench may be comprised of a deep trench configuration. The substrate may include a base substrate and an epitaxial layer formed on the base substrate, and the trench may be formed to penetrate through the epitaxial layer.

According to an exemplary embodiment of the present invention, a method of manufacturing an image sensor includes: forming a circuit trench within a peripheral circuit region to define a circuit active region, and forming a pixel trench within the pixel region to define a photodiode active region; doping an impurity into a bottom and a sidewall of the pixel trench to form a channel stop impurity region, wherein the channel stop impurity region surrounds the bottom and the sidewall of the pixel trench; forming a gap-filling material layer into the circuit trench to form a circuit trench device isolating region; forming a gap-filling material layer into the impurity-doped pixel trench to form a pixel trench device isolating region; and forming a photodiode within the photodiode active region.

The depth of the pixel trench may be deeper than depth of the circuit trench. The substrate may include a base substrate and an epitaxial layer formed on the base substrate, the circuit trench may be formed within the epitaxial layer, and the pixel trench may be formed to penetrate through the epitaxial layer.

According to an exemplary embodiment of the present invention, a semiconductor device includes: a trench device isolating region formed in a substrate to define a photodiode active region; a channel stop impurity region formed in the substrate contacting the device isolating region, wherein the channel stop impurity region surrounds a bottom and a sidewall of the device isolating region; and a photodiode formed within the photodiode active region.

An impurity density within the channel stop impurity region may be continuously decreased away from the device isolating region.

The thickness of the channel stop impurity region on the side of the device isolating region may have a ratio of 0.5 to 1 with respect to a thickness of the channel stop impurity region under the device isolating region.

According to an exemplary embodiment of the present invention, an image sensor includes: a substrate having a pixel region and a peripheral circuit region; a circuit trench device isolating region formed in the peripheral circuit region to define a circuit active region; a pixel trench device isolating region formed in the pixel region to define a photodiode active region; a channel stop impurity region formed in the substrate contacting the pixel trench device isolating region, wherein

the channel stop impurity region surrounds a bottom and a sidewall of the pixel trench device isolating region; and a photodiode formed in the substrate of the photodiode active region.

The depth of the pixel trench device isolating region may be greater than the depth of the circuit trench device isolating region. The substrate may include a base substrate and an epitaxial layer formed on the base substrate, the pixel trench device isolating region may be formed within the epitaxial layer, and the pixel trench device isolating region may be formed to penetrate through the epitaxial layer.

The present invention will become readily apparent to those of ordinary skill in the art when descriptions of exemplary embodiments thereof are read with reference to the accompanying drawings.

BRIEF DESCRIPTION OF THE DRAWINGS

FIG. **1** is an equivalent circuit diagram of a unit pixel of a CMOS image sensor according to an exemplary embodiment of the present invention.

FIG. **2** is a plan view partially illustrating a pixel array unit, according to an exemplary embodiment of the present invention, for embodying the CMOS image sensor illustrated in FIG. **1**.

FIGS. **3**A through **3**F are sectional views illustrating a method of manufacturing the CMOS image sensor according to an exemplary embodiment of the present invention, taken along a line I-I of FIG. **2**.

FIG. **4** is a diagrammatic view illustrating a computer processor system provided with the CMOS image sensor according to an exemplary embodiment of the present invention.

FIG. **5** is a graph showing a boron density in relation to the sidewall depth of the specimens resulting from Experiments 3 and 4 and Comparison 2.

FIG. **6** is a photograph showing a trench device isolating region by Experiment 2.

DESCRIPTION OF EXEMPLARY EMBODIMENTS

Hereinafter, exemplary embodiments of the present invention will be described in detail with reference to the accompanying drawings. It will be understood that when an element such as a layer, film, region, or substrate is referred to as being "on" another element, it can be directly on the other element, or intervening elements may also be present. Like reference numerals refer to similar or identical elements throughout the description of the figures.

FIG. **1** is an equivalent circuit diagram of a unit pixel of a CMOS image sensor according to an exemplary embodiment of the present invention.

Referring to FIG. **1**, a unit pixel PX includes a first photodiode **140**, a second photodiode **150**, a first transfer transistor **120**, a second transfer transistor **130**, a reset transistor **160**, a drive transistor **170**, and a select transistor **180**.

The first and second photodiodes **140** and **150** are respectively connected to sources of the first and second transfer transistors **120** and **130**. Drains of the transfer transistors **120** and **130** commonly share a floating diffusion region FD that is a floating node. The reset transistor **160**, the select transistor **180**, and the drive transistor **170** are serially connected to the floating node FD. The floating node FD is also connected to a gate of the drive transistor **170**. A power source Vdd is connected to a node between the reset transistor **160** and the select transistor **180**.

Hereafter, driving a unit pixel PX, according to an exemplary embodiment of the present invention, will be described with reference to FIG. **1**. First, when a reset signal R_x is supplied to a gate of the reset transistor **160**, the reset transistor **160** is turned on. The electrical potential of the floating node FD is reset to a power source voltage. Then, the reset transistor **160** is turned off. The incident light on the photodiodes **140** and **150** causes electron-hole pairs to be generated in proportion to the incident light. The generated signal charges are trapped to the photodiodes **140** and **150** by gate barriers of the transfer transistors **120** and **130**.

When a transfer signal T_{x1} is supplied to a gate of either one of the transfer transistors **120** or **130**, it is turned on. For example, if the transfer signal T_{x1} is supplied to the first transfer transistor **120**, the first transfer transistor **120** is turned on. In such case, the signal charges trapped to the first photodiode **140** are transferred to the floating node FD to change the potential of the floating node FD. The gate bias of the drive transistor **170** is changed, and thus current drivability of the drive transistor **170** is determined. At this time, a select signal SEL is supplied to a gate of the select transistor **180**, and the select transistor **180** is turned on. As the result, a current corresponding to the potential of the floating node FD flows through the drive transistor **170**, which is supplied as an output voltage Vout. Here, T_{x2} denotes a transfer signal supplied to a gate of the second transfer transistor **130**.

As described above, the unit pixel includes at least two photodiodes, and the transistors are commonly shared to provide the signals from the photodiodes, and the unit pixel area is decreased, allowing for both higher integration and increased fill factor. It is to be understood that the unit pixel may have a single photodiode or at least three photodiodes, and arrangement and number of the transistors may be modified appropriately.

FIG. **2** is a plan view partially illustrating of a pixel array unit, according to an exemplary embodiment of the present invention, for embodying the CMOS image sensor illustrated in FIG. **1**.

Referring to FIG. **2**, the pixel array unit includes unit pixels PX arranged in rows and columns. The unit pixel PX includes a first active region **110** and a second active region **115** defined by forming a trench device isolating region in a predetermined region of a substrate. The first active region **110** includes first and second photodiode active regions **110_1** and **110_2** spaced apart from each other, and a transfer transistor active region **110_3** extending from the first and second photodiode active regions **110_1** and **110_2** to connect the first and second photodiode active regions **110_1** and **110_2**. A reset transistor active region **110_4** extends from the transfer transistor active region **110_3**. First and second photodiodes **140** and **150** are formed into the first and second photodiode active regions **110_1** and **110_2**.

A first transfer gate electrode **123**, the second transfer gate electrode **133**, a reset gate electrode **163**, a select gate electrode **183**, and a drive gate electrode **173** are arranged on the first and second active regions **110** and **115**. The first and second transfer gate electrodes **123** and **133** traverse over the transfer transistor active region **110_3** in a manner of being respectively adjacent to the first and second photodiode active regions **110_1** and **110_2**. A floating diffusion region FD is formed in the transfer transistor active region **110_3** exposed between the first and second transfer gate electrodes **123** and **133**. The reset gate electrode **163** traverses over the reset transistor active region **110_4**, and is adjacent to the floating diffusion region FD. Also, the select gate electrode **183** and the drive gate electrode **173** traverse over the second active region **115**.

Interconnects (not shown) are disposed on the gate electrodes **123**, **133**, **163**, **173** and **183**. For example, an interconnect allows an active region opposite to the floating diffusion region FD out of the reset transistor active region **110_4** adjacent to the reset gate electrode **163** to be electrically connected to the second active region **115** exposed to one side of the select gate electrode **183**, and is connected to the power source (Vdd of FIG. **1**). Another interconnect allows the floating diffusion region FD to be electrically connected to the drive gate electrode **173**.

On the other hand, intervals Wa and Wb between the photodiodes **140** and **150** may be reduced to decrease the area of the unit pixel PX and increase the fill factor. To prevent crosstalk from occurring between the photodiodes **140** and **150**, the trench device isolating region between the first and second photodiode active regions **110_1** and **110_2** may be further deepened.

FIGS. **3**A through **3**F are sectional views illustrating a method of manufacturing the CMOS image sensor according to an exemplary embodiment of the present invention, which illustrate a pixel region and a peripheral circuit region taken along a line I-I of FIG. **2**. The peripheral circuit region is placed in a periphery of the pixel array unit illustrated in FIG. **2**, and a driving circuit to drive the pixel array unit is disposed therein.

Referring to FIG. **3**A, a substrate **100'** having a pixel region and a peripheral circuit region is prepared. The substrate **100'** has a base substrate **100**, and an epitaxial layer **101** having a first conductivity type and formed on the base substrate **100**. The first conductivity type may be a P-type.

A pad insulating layer **103** and a hard mask layer **104** are sequentially stacked on the substrate **100'**. The hard mask layer **104** is used as a hard mask, e.g., a silicon nitride layer, when forming a trench that will be described later. The pad insulating layer **103**, e.g., a silicon oxide layer, relieves stress applied to the substrate **100'** when stacking the hard mask layer **104**.

A photoresist pattern (not shown) is formed on the hard mask **104**. Using the photoresist pattern as a mask, the hard mask layer **104** and the pad insulating layer **103** is etched, thereby partially exposing the substrate **100'**. Then, the photoresist pattern is removed.

The hard mask layer **104** is used as a mask to etch an exposed area of the substrate **100'**. The trenches **100***a* and **100***b* are formed in the substrate **100'**. In an exemplary embodiment of the present invention, the trenches **100***a* and **100***b* are formed in the epitaxial layer **101** and define the active regions. For example, the pixel trench **100***a*, formed in the substrate **100'** of the pixel region, defines a pixel active region. The circuit trench **100***b*, defines a circuit active region formed in the substrate **100'** of the peripheral circuit region. The pixel active region includes the first and second photodiode active regions (**110_1** and **110_2** of FIG. **2**) and the transfer transistor active region (**110_3** of FIG. **2**).

Referring to FIG. **3**B, a buffer insulating layer **105** is stacked on the substrate **100'** where the trenches **100***a* and **100***b* are formed. The buffer insulating layer **105** is formed on the hard mask layer **104** by filling up the trenches **100***a* and **100***b*. A photoresist pattern **109** is formed on the buffer insulating layer **105**. The photoresist pattern **109** covers an entire surface of the peripheral circuit region, but, in the pixel region, is aligned to the hard mask layer **104** to expose the buffer insulating layer **105** on an upper surface of the pixel trench **100***a*.

Using the photoresist pattern **109** as a mask, the exposed buffer insulating layer **105** is etched. Therefore, the buffer insulating layer **105** within the pixel trench **100***a* is thoroughly etched, and a bottom of the pixel trench **100***a* is exposed. Then, the bottom of the exposed pixel trench **100***a* is etched to form a deep pixel trench **100***a'* as illustrated in FIG. **3**C.

While the deep pixel trench **100***a'* is formed, the photoresist pattern **109** may be etched, and an upper surface of the buffer insulating layer **105** may be partially etched. The buffer insulating layer **105** acts as an etch buffer layer that does not expose the hard mask layer **104** while forming the deep pixel trench **100***a'* as described above.

Referring to FIG. **3**C, the depth of deep pixel trench **100***a'* is greater than that of the circuit trench **100***b*. The photodiode active regions (**110_1** and **110_2** of FIG. **2**) are sufficiently separated from each other to prevent the crosstalk apt to occurring between the photodiodes that will be formed in a subsequent process. According to an exemplary embodiment of the present invention, deep pixel trench **100***a'* has a depth of about 1 μm to about 4 μm, and may prevent crosstalk. The circuit trench **100***b* may be a shallow trench having a depth of about 0.4 μm or less. However, it is to be understood that the pixel trench may be formed as a shallow trench of 0.4 μm or less.

Both the deep pixel trench **100***a'* and the circuit trench **100***b* may be formed within the epitaxial layer **101**. It is to be understood that the circuit trench **100***b* may be formed within the epitaxial layer **101** and the deep pixel trench **100***a'* may penetrate through the epitaxial layer **101**.

Thereafter, an impurity is doped into the bottom and the sidewall of the pixel trench **100***a'* to form a channel stop impurity region **106** that surrounds the bottom and the sidewall of the pixel trench **100***a'*. When the channel stop impurity region **106** completely surrounds the bottom and the sidewall of the pixel trench **100***a'*, the exposure of an interfacial surface of the pixel trench **100***a'* is prevented. In an exemplary embodiment of the present invention, the channel stop impurity region **106** conformally surrounds the bottom and the sidewall of the pixel trench **100***a'*, and the dark current and noise caused by an interfacial surface defect of the pixel trench **100***a'* can be decreased.

The impurity doping may be a plasma doping process. For example, the substrate **100** having the pixel trench **100***a'* is placed within a plasma doping chamber (not shown), and dopant gas as a source gas is induced into the chamber. Then, the dopant gas is used to generate plasma, and a voltage is supplied to the substrate **100** to dope ions of the plasma into the substrate **100**, e.g., the inside of the pixel trench **100***a'*. In an exemplary embodiment of the present invention, the plasma forms the channel stop impurity region **106** that surrounds the bottom and sidewall of the pixel trench **100***a'*. For example, when the pixel trench **100***a'* is formed as a deep trench configuration as described above, plasma doping may effectively form the channel stop impurity region **106** that surrounds the bottom and the sidewall of the deep trench. When plasma doping is used, the impurity is distributed by concentrating on a portion in contact with the pixel trench **100***a'*, and a density of the impurity is continuously decreased away from the pixel trench **100***a'*. The channel stop impurity region **106** may be thinly formed and a depletion region of the photodiode that will be formed later is not reduced, and the decrease of the saturation current may be prevented.

The dopant gas may comprise, for example, BF_3, B_2H_6, BCl_3 or any combinations thereof. Boron may be doped into the channel stop impurity region **106**. The source gas may include a dilution gas together with the dopant gas. The dilution gas may comprise, for example, H_2, N_2, O_2, F_2, He, Ar, Xe, or any combinations thereof. The dilution gas may be evenly dispersed in a density of plasma, distributing the chan-

nel stop impurity region **106** throughout the bottom and the sidewall of the pixel trench **100***a*'. In exemplary embodiments of the present invention, the channel stop impurity region **106** surrounds the bottom and the sidewall of the deep trench. For example, the thickness of the channel stop impurity region **106** on the side of the pixel trench **100***a*' may have a ratio of 0.5 to 1 with respect to the thickness of the channel stop impurity region **106** under the pixel trench **100***a'*.

Before doping the impurity, an oxide layer **108** may be formed within the pixel trench **100***a*'. The oxide layer **108** may block an inflow of a material besides boron when performing plasma doping. The oxide layer **108** may be a thermal oxide layer. When forming the thermal oxide layer, damages such as a lattice defect occurring within the trench **100***a*' may be relieved. For example, plasma doping may be performed with an energy in a range of about 1 kV to 7 kV, and may prevent the dark current and prevent the decrease of the saturation current.

In an exemplary embodiment of the present invention, plasma doping is performed with a dose in a range of about 0.1E13 atoms/cm^2 to about 1.0E18 atoms/cm^2.

Referring to FIG. **3**D, a gap-filling material layer **107** is formed within the impurity-doped pixel trench **100***a*'. The gap-filling material layer **107** may comprise an insulating layer. The gap-filling material layer **107** is formed on an upper surface of the buffer insulating layer **105**. The gap-filling material layer **107** may comprise an insulating material, such as for example, a High Density Plasma-Chemical Vapor Deposition (HDP-CVD) oxide with an excellent gap-fill property or Undoped Silica Glass (USG). Chemical mechanical Polishing (CMP) is performed on the substrate **100'** having the gap-filling material layer **107** thereon until the hard mask layer **104** is exposed, thereby planarizing the gap-filling material layer **107** and the buffer insulating layer **105**. Thereafter, the hard mask layer **104** and the pad insulating layer **103** are removed to expose the active regions.

As illustrated in FIG. **3**E, the pixel trench device isolating region **100***a*", the gap-filling material layer **107**, the circuit trench device isolating region **100***b*', and the buffer insulating layer **105** are formed.

An impurity having a second conductivity type is implanted within the substrate **100'** of the peripheral circuit region, thereby forming a well **102** having the second conductivity type. For example, the second conductivity type may be an N-type. Thereafter, a gate insulating layer **119** is formed on the substrate **100'**, and a gate conductive layer is formed on the gate insulating layer **119**. The gate conductive layer may be a doped polysilicon layer. The gate conductive layer is patterned to form a first transfer gate electrode **123** and a second transfer gate electrode **133** on the transfer transistor active region (**110_3** of FIG. **2**), and a circuit gate electrode **193** on the circuit active region. The gate insulating layer **119** may also be patterned. The first and second transfer gate electrodes **123** and **133** are formed adjacently to the first and second photodiode active regions (**110_1** and **110_2** of FIG. **2**), respectively.

A first photoresist pattern that exposes the transfer transistor active region **110_3** is formed. Then, using the first photoresist pattern and the first and second transfer gate electrodes **123** and **133** as masks, the impurity having the second conductivity type is implanted to form a floating diffusion region FD.

Thereafter, the first photoresist pattern is removed, and a second photoresist pattern for exposing the circuit active region is formed. Using the second photoresist pattern and the circuit gate electrode **193** as masks, the impurity having the first conductivity type is implanted to form source/drain regions **195**.

A third photoresist pattern (not shown) to expose the photodiode active regions (**110_1** and **110_2** of FIG. **2**) is formed. Using the third photoresist pattern as a mask, the impurity having the second conductivity type is implanted into the first and second photodiode active regions (**110_1** and **110_2** of FIG. **2**) at a high energy, forming first and second lower impurity regions **147** and **157**. Then, the third photoresist pattern is removed.

Referring to FIG. **3**F, a spacer insulating layer is stacked on the substrate **100'**. The spacer insulating layer is anisotropically etched to form spacers **129** along sidewalls of the gate electrodes **123**, **133**, and **193**. A fourth photoresist pattern to expose the photodiode active regions (**110_1** and **110_2** of FIG. **2**) is formed on the substrate **100'** where the spacers **129** are formed. Using the fourth photoresist pattern and the spacers **129** as masks, the impurity having the first conductivity type is implanted at a low energy to form first and second upper impurity regions **145** and **155**. The first and second upper impurity regions **145** and **155** are formed within the first and second lower impurity regions **147** and **157**, respectively. The first upper impurity region **145** and the first lower impurity region **147** comprise the first photodiode **140**. The second upper impurity region **155** and the second lower impurity region **157** comprise the second photodiode **150**.

The first and second upper impurity regions **145** and **155** may be formed using plasma doping. According to an exemplary embodiment of the present invention, the impurity density within the first and second upper impurity regions **145** and **155** are concentrated on the surface of the substrate **100'**, so that the first and second upper impurity regions **145** and **155** may be thinly formed, and the thickness of a depletion region is increased when the photodiodes **140** and **150** are operated, improving photosensitivity of the photodiodes **140** and **150**.

FIG. **4** is a diagrammatic view illustrating a computer processor system provided with the CMOS image sensor according to an exemplary embodiment of the present invention.

Referring to FIG. **4**, a computer processor system **300** includes a Central Processor Unit (CPU) **320**, a floppy disc drive **330**, a CDROM drive **340**, a CMOS image sensor **310**, an I/O unit **360**, and a RAM **350**. The CMOS image sensor **310** may be embodied as described above with reference to FIGS. **1**, **2**, and **3**A through **3**F. The CPU **320**, the CMOS image sensor **310**, and the RAM **350** may be equipped within a System on Chip (SoC).

The CPU **320**, the floppy disc drive **330**, the CDROM drive **340**, the CMOS image sensor **310**, the I/O unit **360**, and the RAM **350** may be mutually communicated via a bus **370**.

Hereinafter, examples of experiments are presented to assist in understanding of exemplary embodiments of the present invention.

Dark Current and Random Noise Characteristics of CMOS Image Sensors

<Experiment 1>

An epitaxial layer is formed on a substrate, and a mask pattern comprising a silicon oxide layer and a silicon nitride layer is formed on the epitaxial layer. Using the mask pattern as a mask, the epitaxial layer is etched to a depth of about 0.3 μm to form a trench, defining a photodiode active region. Boron is doped into a bottom and a sidewall of the trench using plasma doping, forming a channel stop impurity region. When performing a plasma doping process, BF_3 is used as a source gas. The doping energy is 3 kV and the dose of BF_3 is

1.0E15atoms/cm^2. An HDP-CVD oxide layer is buried into the trench doped with boron, and the HDP-CVD oxide layer is planarized by CMP. Thereafter, the silicon nitride layer and the silicon oxide layer are removed to form a trench device isolating region. Phosphorus ions are implanted into the photodiode active region to form a lower impurity region, and boron is implanted to the photodiode active region to form an upper impurity region.

<Experiment 2>

A specimen is manufactured in the same manner as that of Experiment 1, except that BF_3 and N_2 are used as source gases when performing plasma doping, wherein the fluid quantity ratios of BF_3 and N_2 are 20% and 80%, respectively.

<Comparison 1>

When doping boron into the trench, plasma doping is not used. Instead, boron is implanted under process conditions of 30 kV and 1.2E13atoms/cm^2, and again implanted under process conditions of 10 kV and 6.0E12atoms/cm^2. All other process conditions and steps are the same as those of Experiment 1.

The measured dark current and random noise characteristics of the specimens according to Experiment 1, Experiment 2, and Comparison 1 are listed in Table 1.

TABLE 1

	Boron Doping conditions within Trench		Dark	
	Plasma Doping	Ion Implantation	Current (mV/sec)	Noise (LSB)
Experiment 1	BF_3, 3 kV, 1.0E15 atoms/cm^2	—	6	3.97
Experiment 2	BF_3, 3 kV, 1.0E15 atoms/cm^2 (20% BF_3, 80% N_2)	—	7.5	3.65
Comparison 1	—	B, 30 kV, 1.2E13 atoms/cm^2 B, 10 kV 6.0E12 atoms/cm^2	14	4.65

Referring to Table 1, when boron is doped within the trench, the specimens according to Experiments 1 and 2 that use plasma doping have decreased dark current and lower noise than those of the specimen of Comparison 1. Experiment 2, in which N_2 is added as a dilution gas, exhibits a noise value less than that of Experiment 1. When an impurity is doped into the bottom and the sidewalls of the trench, the dark current characteristic and the random noise characteristic can be improved when using plasma doping.

When the inside of the trench is doped using plasma doping, a channel stop region completely surrounds the bottom and sidewall of the trench. Such a channel stop impurity region prevents charges which are generated from an interfacial surface of the trench involving a crystalline defect from reaching a photodiode, and the dark current and the noise may be decreased.

Doping Profile of the Bottom and Sidewall of the Trench

FIG. **6** is a photograph taking the trench device isolating region by the Experiment 2.

Referring to FIG. **6**, the thicknesses W_2 and W_3 of the channel stop impurity region **106** in both sides of the trench **100***a* are 65.74 nm and 61.07 nm, respectively. The thickness W_1 of the channel stop impurity region **106** under the trench **100***a* is 72.37 nm. Therefore, the thickness of the channel stop impurity region **106** in the side of the trench **100***a* has a ratio of 0.86 or 0.91 with respect to the channel stop impurity region **106** under the trench **100***a*.

When BF_3 is solely used as the source gas without using the dilution gas (Experiment 1), the thickness of the channel stop impurity region on the side of the trench has a ratio of roughly 0.5 with respect to that under the trench.

When the channel stop impurity region is formed using plasma doping, the thickness of the channel stop impurity region on the side of the trench has a ratio of 0.5 to 1 with respect to that under the trench. When the channel stop impurity region is formed using plasma doping, the channel stop impurity region conformally encloses the sidewall of the trench. When the dilution gas is used during plasma doping, the conformality can be improved.

Doping Profile Within the Substrate

A substrate having an epitaxial layer is prepared, and boron is doped into the substrate using plasma doping, thereby forming an impurity region. When performing plasma doping, BF_3 and N_2 are used as source gases. Also, a fluid quantity ratio of BF_3 and N_2 are 20% and 80%, respectively. A doping energy is 3 kV and a dose of BF_3 is 1.0E15atoms/cm^2.

<Experiment 4>

A specimen is manufactured in the same manner as that of the Experiment 3, except that the doping energy during plasma doping is 1 kV.

<Comparison 2>

A substrate having an epitaxial layer is prepared. Boron is ion implanted under process conditions of 30 kV and 1.2E13atoms/cm^2, and again implanted under conditions of 10 kB and 6.0E12atoms/cm^2, thereby forming a boron-doped impurity region within the substrate.

The process conditions for doping boron into the specimens according to Experiment 3, Experiment 4, and Comparison 2 are listed in Table 2.

TABLE 2

	Boron Doping Conditions within Trench	
	Plasma Doping	Ion Implantation
Experiment 3	BF_3, 3 kV, 1.0E15 atoms/cm^2 (20% BF_3, 80% N_2)	—
Experiment 4	BF3, 1 kV, 1.0E15 atoms/cm^2 (20% BF_3, 80% N_2)	—
Comparison 2	—	B, 30 kV, 1.2E13 atoms/cm^2 B, 10 kV, 6.0E12 atoms/cm^2

FIG. **5** is a graph showing the boron density in relation to the sidewall depth of the specimens resulting from Experiments 3 and 4 and Comparison 2. In FIG. **5**, a, b and c respectively denote the specimens of Experiments 3 and 4 and Comparison 2.

Referring to FIG. **5**, the specimens a and b of Experiments 3 and 4 have a considerable quantity of the impurities on the surface of the substrate, and the density of the impurity is continuously decreased with depth from the surface of the substrate. The specimen c of Comparison 2 has an impurity density that decreased until reaching a depth of 0.01 μm from the surface of the substrate.

In view of these experiments, the impurity region formed using ion implantation is thicker than that formed using plasma doping. Although ion implantation performed by tilting an ion beam is used to form a channel stop impurity region into the side of the trench, the impurity region is thickly formed and decreases the depletion region of the photodiode that is adjacent to the side of the trench. In contrast, the

channel stop impurity region formed by plasma doping does not affect the depletion region of the photodiode. Therefore, when the channel stop impurity region is formed using plasma doping, the decrease of the saturation current can be prevented.

According to an exemplary embodiment of the present invention an impurity is doped to a bottom and a sidewall of a trench to form a channel stop impurity region that completely surrounds the bottom and the sidewall of the trench, and dark current and noise may be decreased. In an exemplary embodiment of the present invention, the impurity doping is performed by plasma doping to thinly form the entire channel stop impurity region, preventing the decrease of the saturation current of a CMOS image sensor.

Although the exemplary embodiments of the present invention have been described in detail with reference to the accompanying drawings for the purpose of illustration, it is to be understood that the inventive processes and devices should not be construed as limited thereby. It will be readily apparent to those of reasonable skill in the art that various modifications to the foregoing exemplary embodiments can be made therein without departing from the scope of the invention as defined by the appended claims, with equivalents of the claims to be included therein.

What is claimed is:

1. A method of manufacturing an image sensor comprising:

forming a circuit trench within a peripheral circuit region of a substrate to define a circuit active region, and forming a pixel trench within the pixel region of the substrate to define a photodiode active region using a hard mask layer as a mask;

forming a buffer insulating layer on the hard mask layer to fill the circuit trench and the pixel trench;

patterning the buffer insulating layer to expose a bottom of the pixel trench and to cover the hard mask layer;

etching the exposed bottom of the pixel trench to form a deer pixel trench using the buffer insulating layer as an etching buffer layer covering the hard mask layer, a depth of the deep pixel trench being greater than a depth of the circuit trench;

doping an impurity into a bottom and a sidewall of the deep pixel trench to form a channel stop impurity region, wherein the channel stop impurity region surrounds the bottom and the sidewall of the deep pixel trench;

forming a gap-filling material layer into the circuit trench to form a circuit trench device isolating region;

forming a gap-filling material layer into the impurity-doped pixel trench to form a pixel trench device isolating region; and

forming a photodiode within the photodiode active region.

2. The method of claim **1**, wherein the depth of the pixel trench is about 1 μm to about 4 μm.

3. The method of claim **1**, wherein the doping step is performed using plasma doping.

4. The method of claim **3**, further comprising forming an oxide layer within the deep pixel trench before the doping step.

5. The method of claim **3**, wherein the plasma doping is performed using at least one of a dopant gas or a dilution gas.

6. The method of claim **1**, wherein the substrate comprises a base substrate and an epitaxial layer formed on the base substrate, wherein the circuit trench and the deep pixel trench are formed within the epitaxial layer.

7. The method of claim **1**, wherein forming the photodiode comprises:

forming a lower impurity region within the photodiode active region; and

forming an upper impurity region on the lower impurity region using plasma doping.

* * * * *