US006309215B1

(12) **United States Patent**
Phan et al.

(10) **Patent No.: US 6,309,215 B1**
(45) **Date of Patent: Oct. 30, 2001**

(54) **ATTACHMENT DEVICES AND METHOD FOR A DENTAL APPLICANCE**

(75) Inventors: **Loc X. Phan**, San Francisco; **Muhammad Chishti**; **Ross J. Miller**, both of Sunnyvale, all of CA (US)

(73) Assignee: **Align Technology Inc.**, Santa Clara, CA (US)

(*) Notice: Subject to any disclaimer, the term of this patent is extended or adjusted under 35 U.S.C. 154(b) by 0 days.

(21) Appl. No.: **09/454,278**

(22) Filed: **Dec. 3, 1999**

Related U.S. Application Data

(63) Continuation-in-part of application No. 09/466,353, filed on Dec. 17, 1999, which is a continuation of application No. PCT/US98/12861, filed on Jun. 19, 1998, which is a continuation-in-part of application No. 08/947,080, filed on Oct. 8, 1997, now Pat. No. 5,975,893, application No. 09/454,278, which is a continuation-in-part of application No. 09/250,962, filed on Feb. 16, 1999, now Pat. No. 6,183,248, and a continuation-in-part of application No. 09/169,034, filed on Oct. 8, 1998, which is a continuation-in-part of application No. 08/947,080, filed on Oct. 8, 1997, now Pat. No. 5,975,893.

(60) Provisional application No. 60/110,881, filed on Jun. 20, 1997, and provisional application No. 60/050,342, filed on Jun. 20, 1997.

(51) **Int. Cl.**[7] **A61C 3/00**

(52) **U.S. Cl.** **433/24**; 433/6

(58) **Field of Search** 433/6, 24, 214, 433/3

(56) **References Cited**

U.S. PATENT DOCUMENTS

3,922,786 * 12/1975 Lavin 433/24
5,011,705 * 4/1991 Lemchen 433/24
5,957,686 * 9/1999 Anthony 433/6
5,964,587 * 10/1999 Sato 433/6
5,971,754 * 10/1999 Sondhi et al. 433/24

FOREIGN PATENT DOCUMENTS

WO 98/58596 12/1998 (WO) .

OTHER PUBLICATIONS

Kesling et al., "The philosophy of the tooth positioning appliance" *American Journal of Orthodontics land Oral Surgery* (1945) 31:297–304.

(List continued on next page.)

Primary Examiner—Cary E. O'Connor
(74) *Attorney, Agent, or Firm*—Townsend and Townsend and Crew LLP

(57) **ABSTRACT**

The present invention provides improved systems and methods for removably attaching a dental positioning appliance to the dental features of a patient during orthodontic treatment. Such removable dental positioning appliances are often preferred over conventional braces for tooth repositioning due to comfort, appearance and ease of use. These appliances function by applying force to specific surfaces of the teeth or dental features to cause directed movement. However, the type of movement and level of force applied is usually dependent on the surface characteristics and positions of the dental features. In many cases, these aspects are inadequate to provide sufficient anchoring or to impart considerable force on the teeth to be repositioned. Such limitations may be diminished with the use of one or more attachment devices which may be positioned on the teeth or dental features to provide the appropriate physical features. Specific design and location of these attachment devices may provide newly achievable and/or more effective repositioning forces, anchoring ability and appliance retention. The systems and methods of the present invention provide the design, production and use of such attachment devices with removable dental positioning appliances in orthodontic treatment.

16 Claims, 14 Drawing Sheets

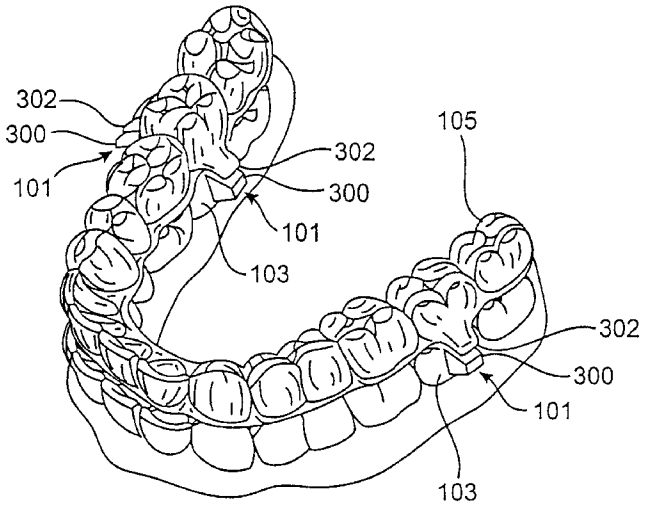

OTHER PUBLICATIONS

Kesling et al., "Coordinating the predetermined pattern and tooth positioner with conventional treatment" *American Journal of Orthodontics and Oral Surgery* (1945) 32:285–293.

Warunek et al., "Clinical use of silicone elastomer appliances" *Journal of Clinical Orthodontics* (1989) 23:694–700.

Product Brochure, Raintree Essix™, Inc. New Orleans, Louisiana 70125, 7 pages total from http://www/essix.com/magazine/default.html.

Product Brochure, Tru–tain Orthodontic & Dental Supplies, Rochester, Minnesota 55902, 16 pages total.

Kleemann et al., "The speed positioner" *Journal of Clinical Orthodontics* (1996) 30:673–680.

Cureton, "Correcting malaligned mandibular incisors with removable retainers" *Journal of Clinical Orthodontics* (1996) 30:390–395.

Chippone, "Constructing the gnathologic setup and positioner" *Journal of Clinical Orthodontics* (1980) 14:121–133.

Shilliday, "Minimizing finishing problems with the mini–positioner" *American Journal of Orthodontics* (1971) 59:596–599.

Wells, "Application of the positioner appliance in orthodontic treatment" *American Journal of Orthodontics* (1970) 58:351–366.

Cottingham, "Gnathologic clear plastic positioner" *American Journal of Orthodontics* (1969) 55:23–31.

* cited by examiner

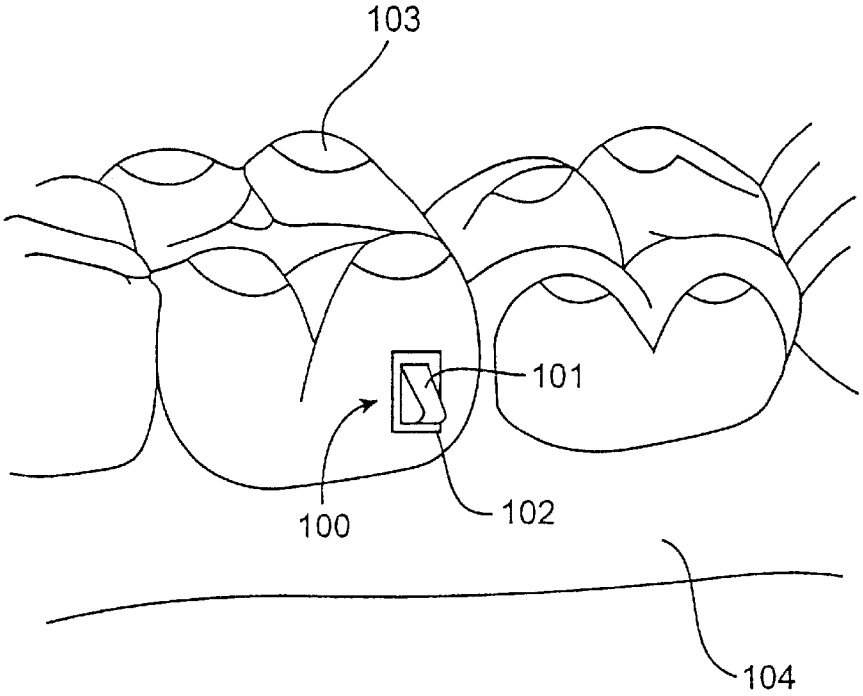

FIG. 1

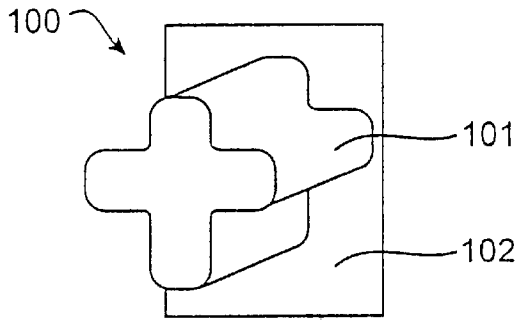

FIG. 2A

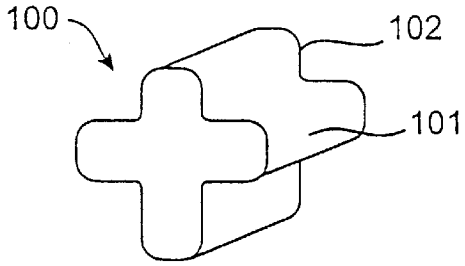

FIG. 3A

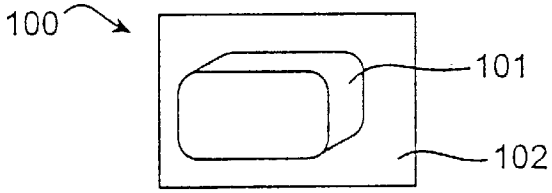

FIG. 2B

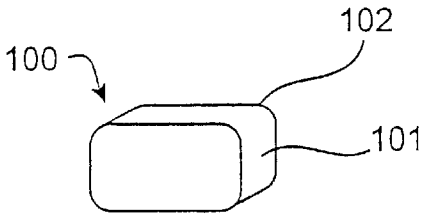

FIG. 3B

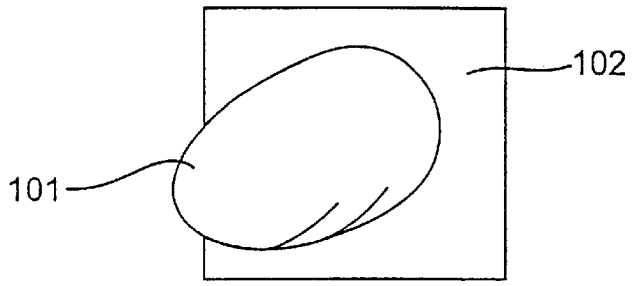

FIG. 4B

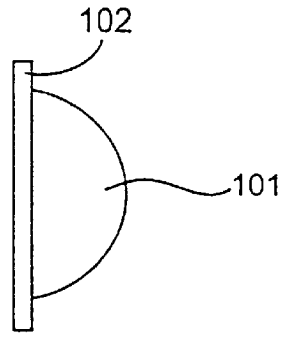

FIG. 4A

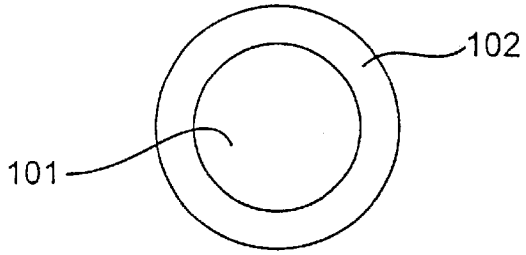

FIG. 4

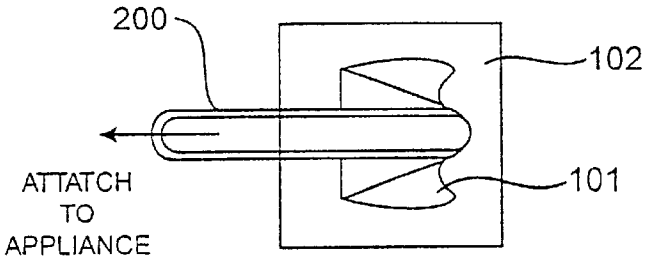

FIG. 5

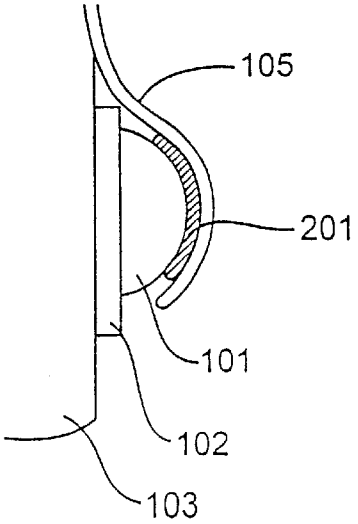

FIG. 6

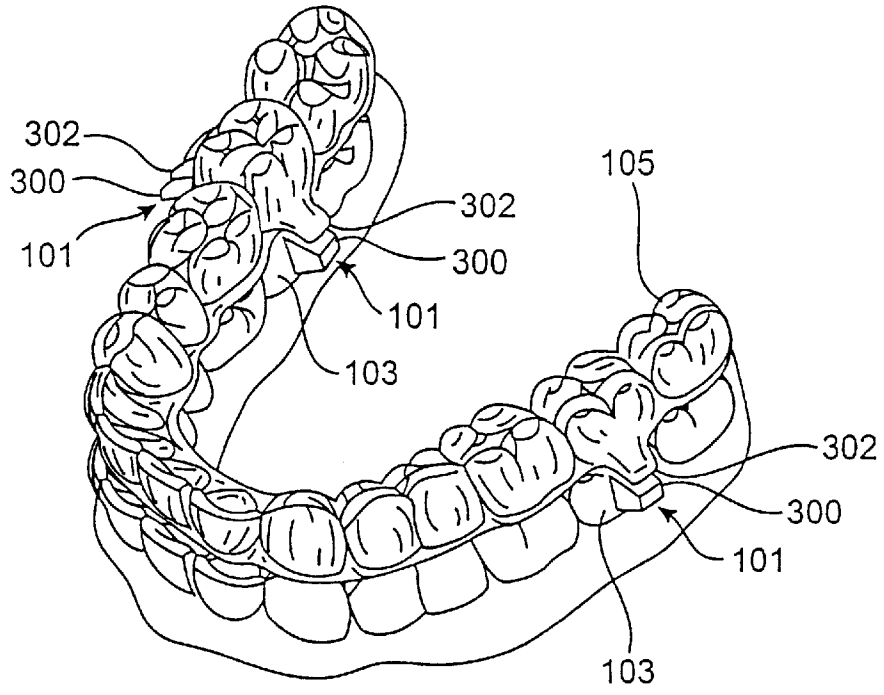

FIG. 7

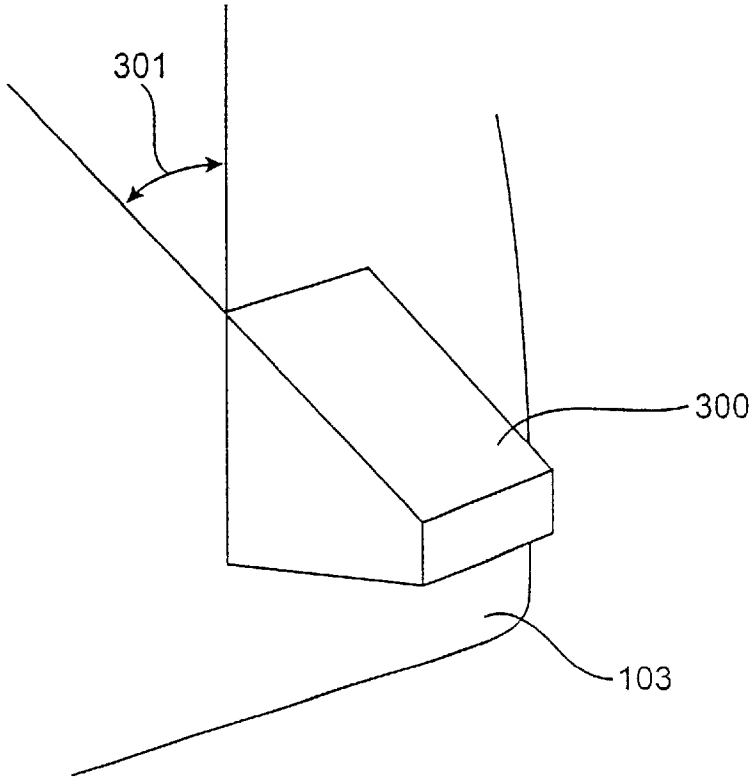

FIG. 8

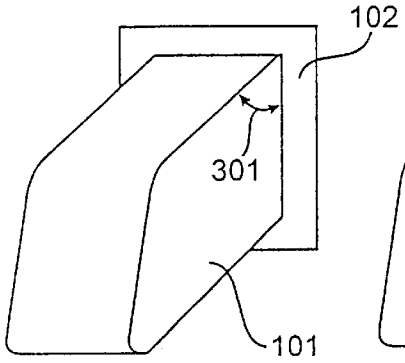

FIG. 9A

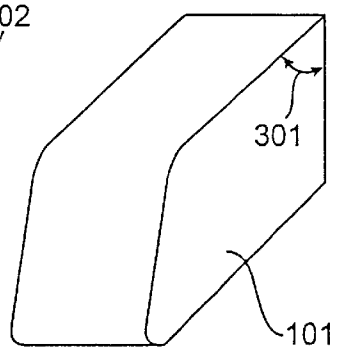

FIG. 9B

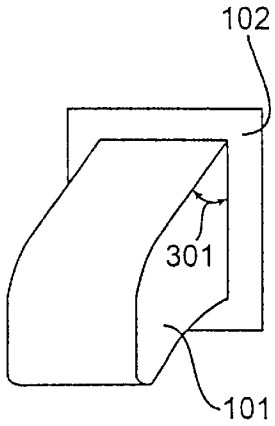

FIG. 9C

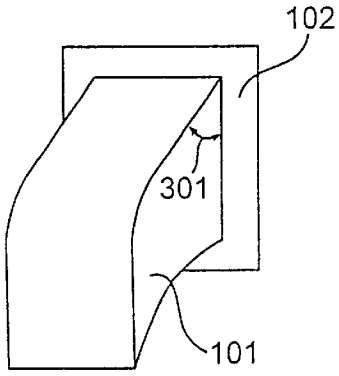

FIG. 9D

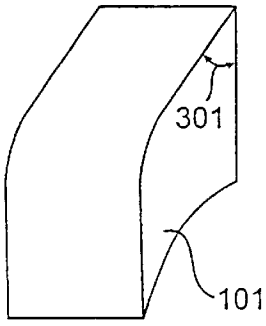

FIG. 9E

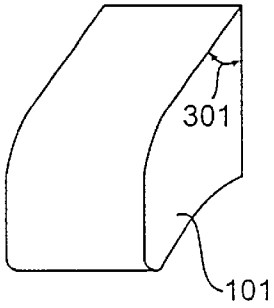

FIG. 9F

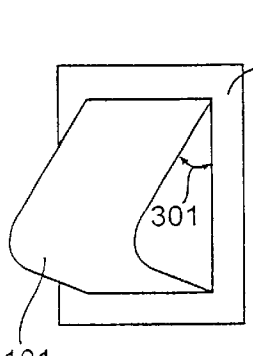

FIG. 9G

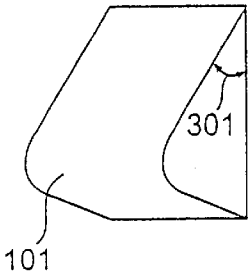

FIG. 9H

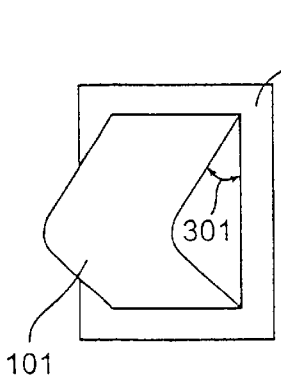

FIG. 9I

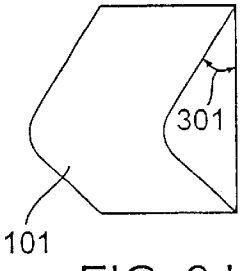

FIG. 9J

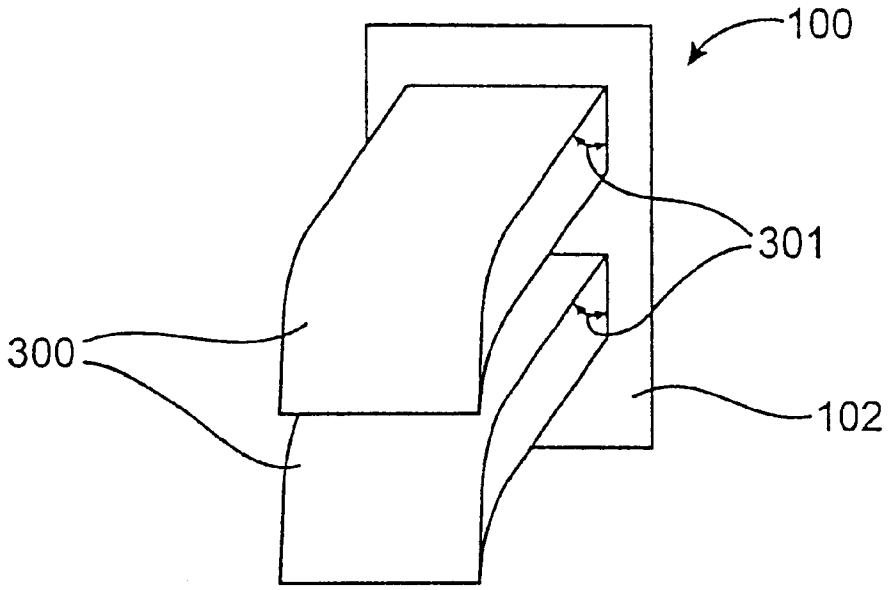

FIG 9K

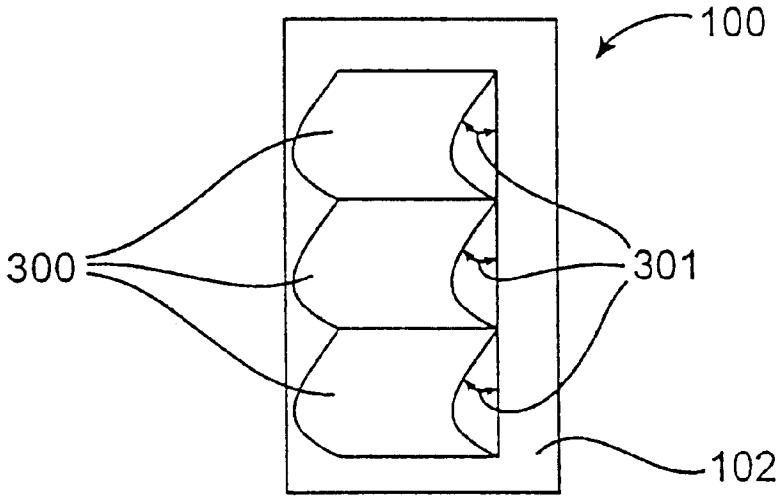

FIG 9L

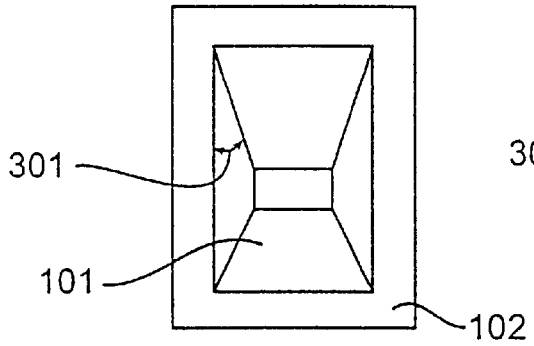

FIG. 10A

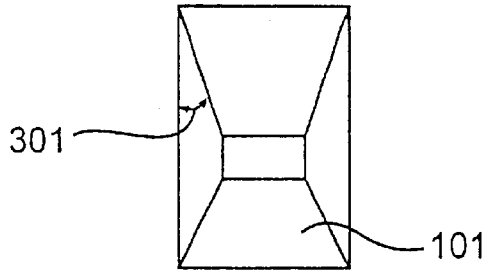

FIG. 10B

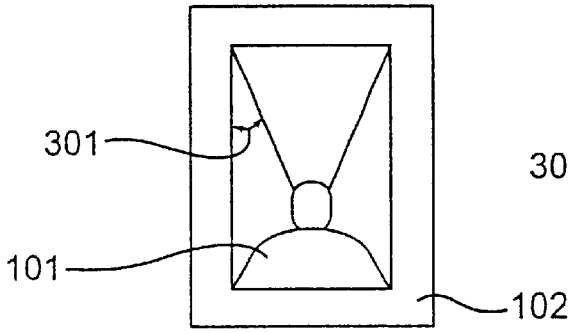

FIG. 10C

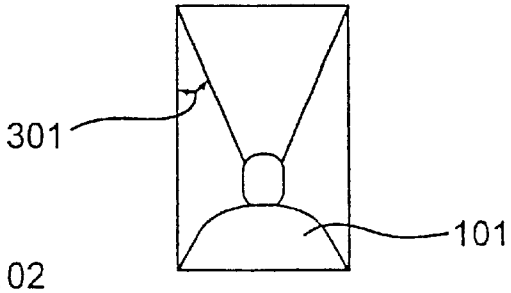

FIG. 10D

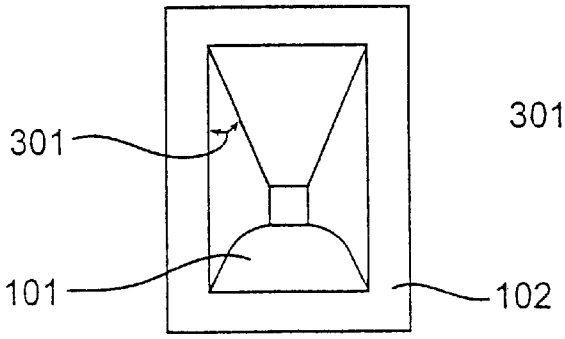

FIG. 10E

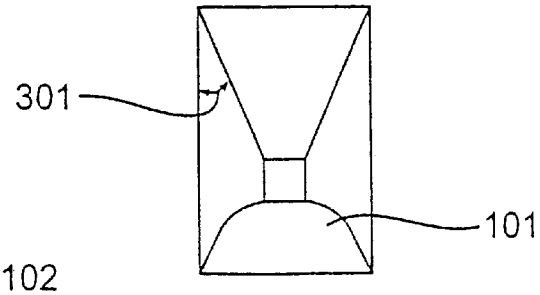

FIG. 10F

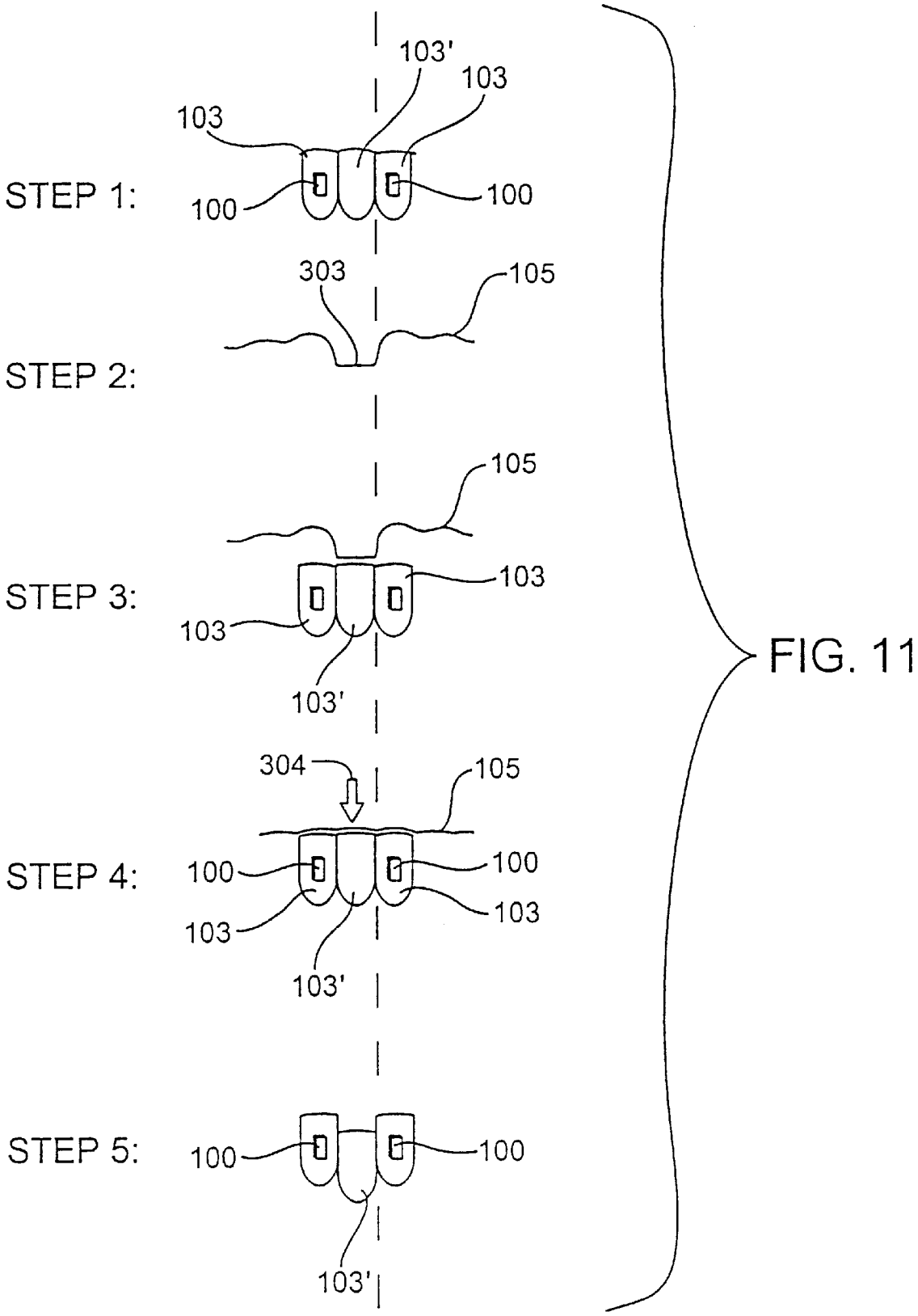
STEP 1:
103'
103
103
100
100
STEP 2:
303
105
STEP 3:
105
103
103
103'
STEP 4:
304
105
100
100
103
103
103'
STEP 5:
100
100
103'

FIG. 11

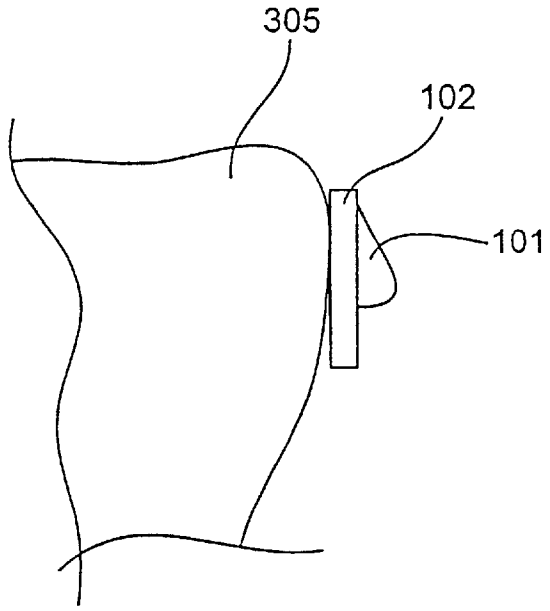

FIG. 12A

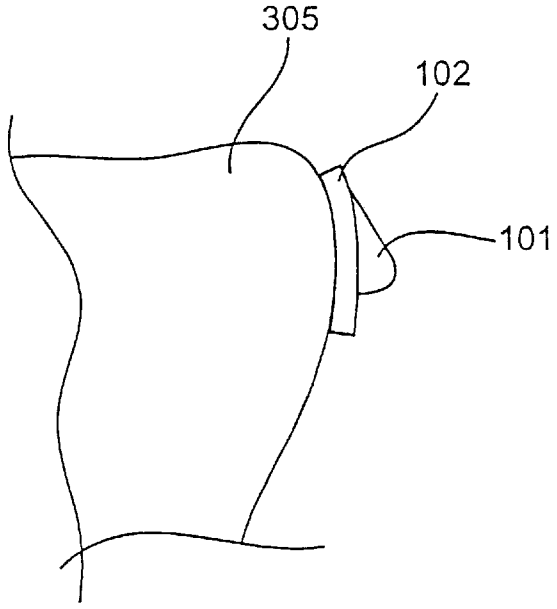

FIG. 12B

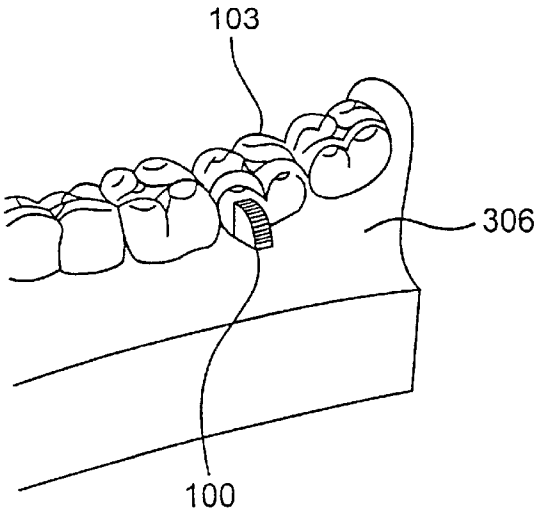

FIG. 13A

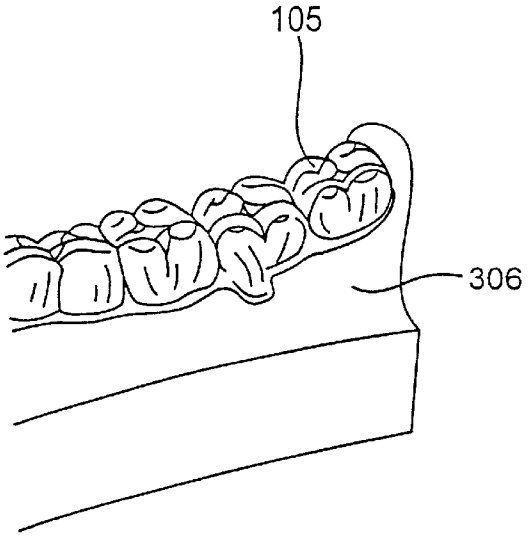

FIG. 13B

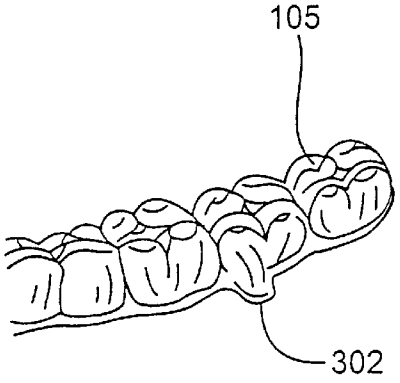

FIG. 13C

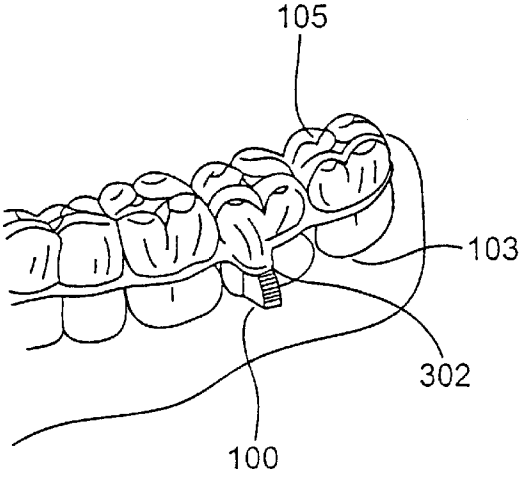

FIG. 13D

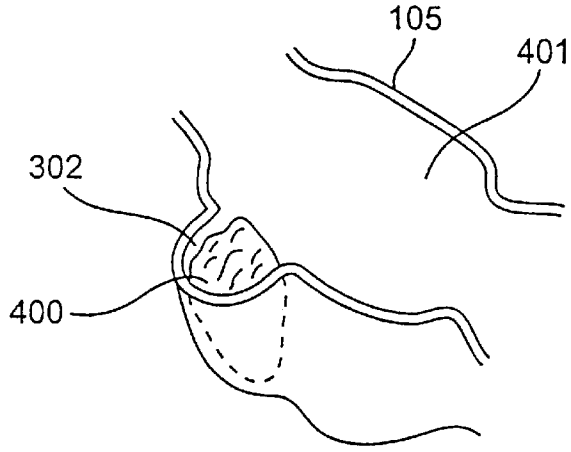

FIG. 14A

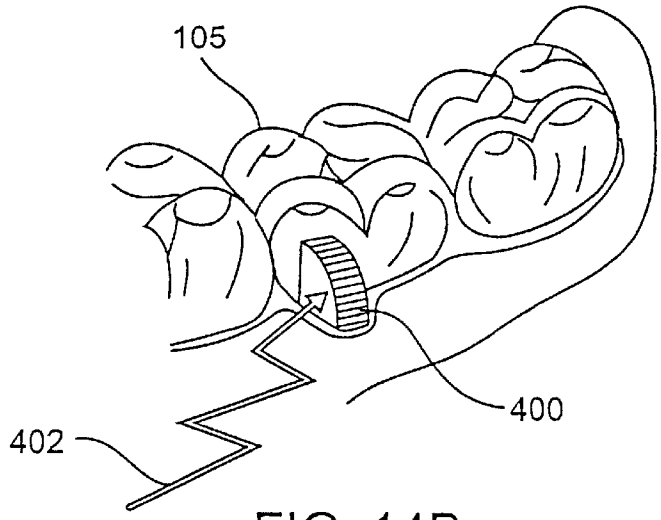

FIG. 14B

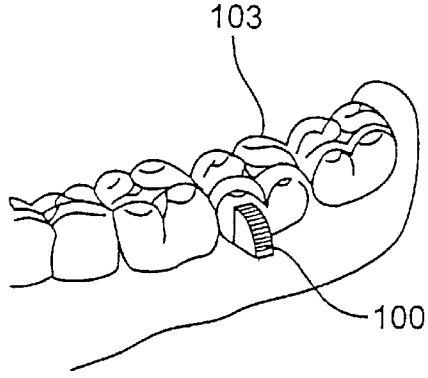

FIG. 14C

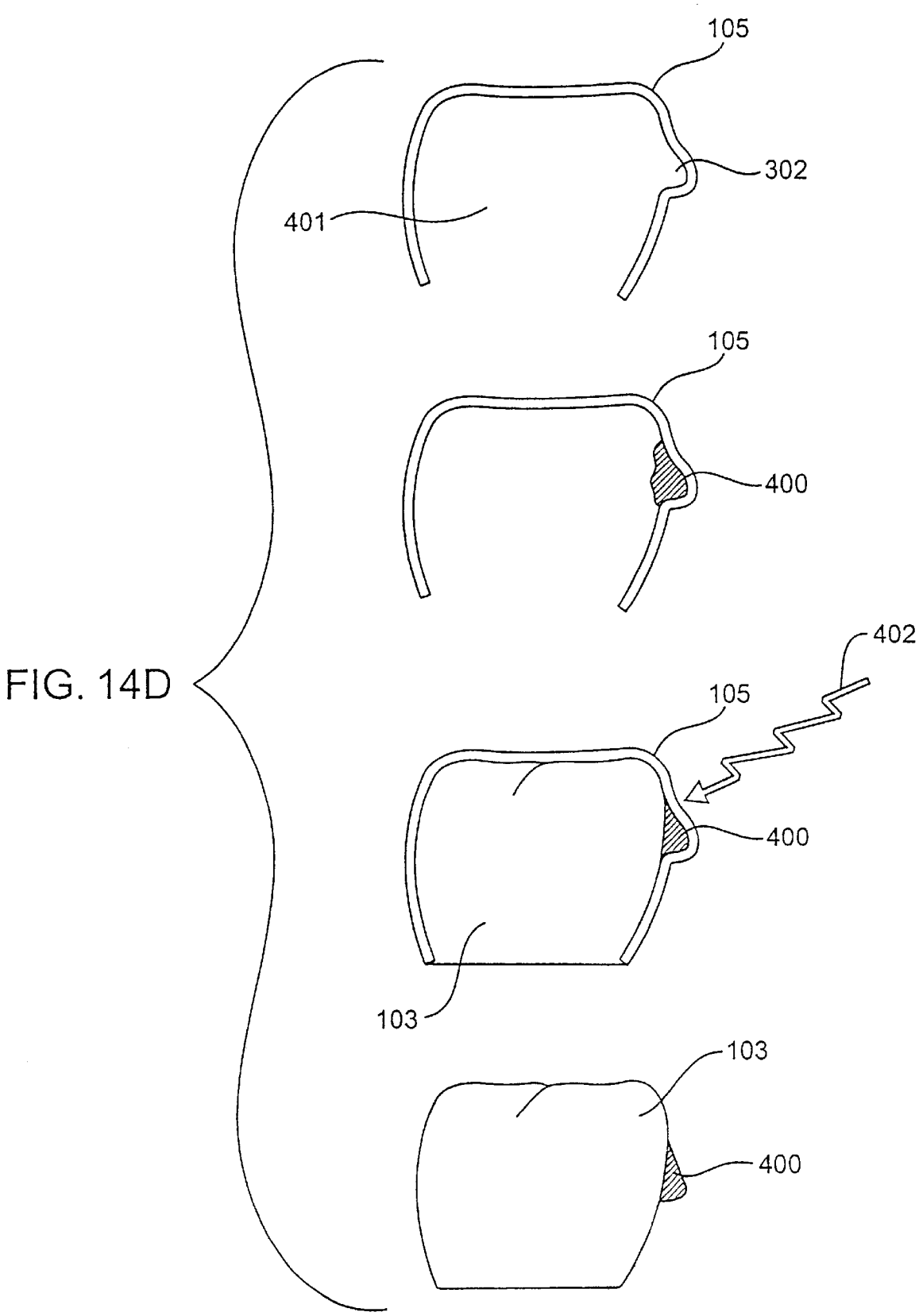

FIG. 14D

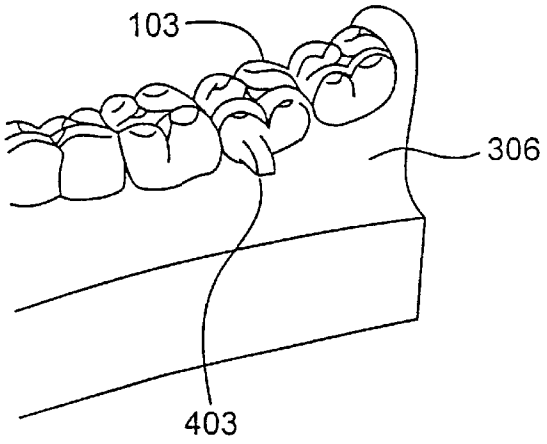

FIG. 15A

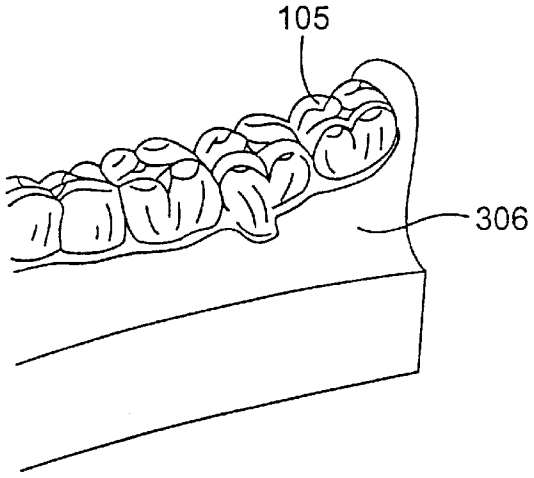

FIG. 15B

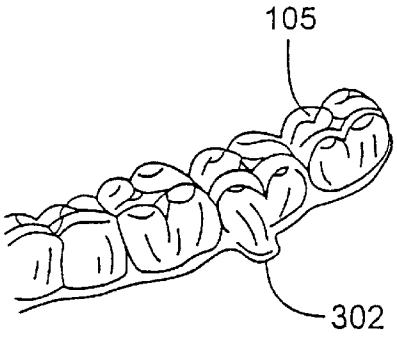

FIG. 15C

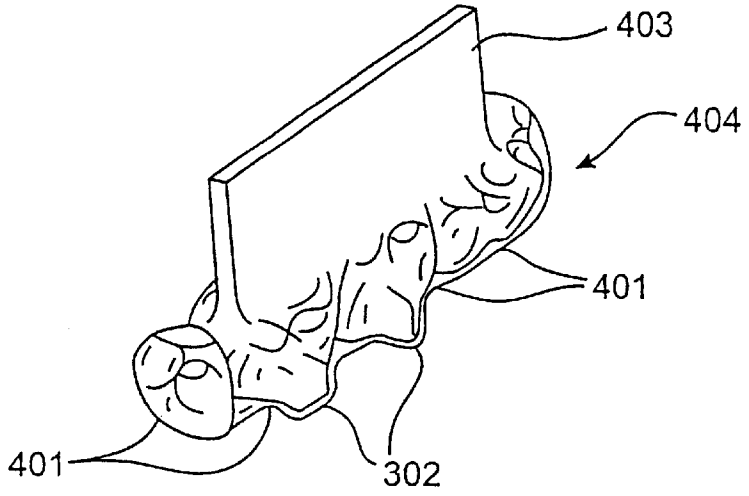

FIG. 16

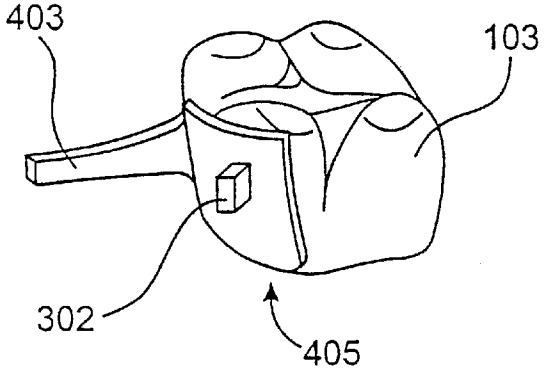

FIG. 17A

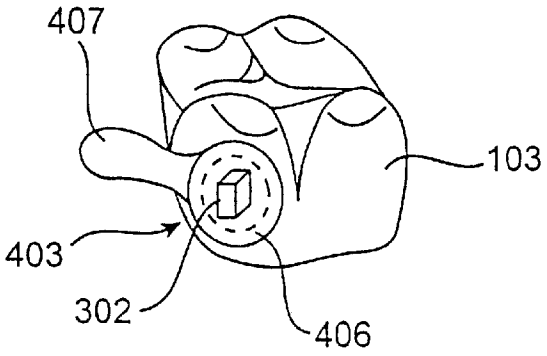

FIG. 17B

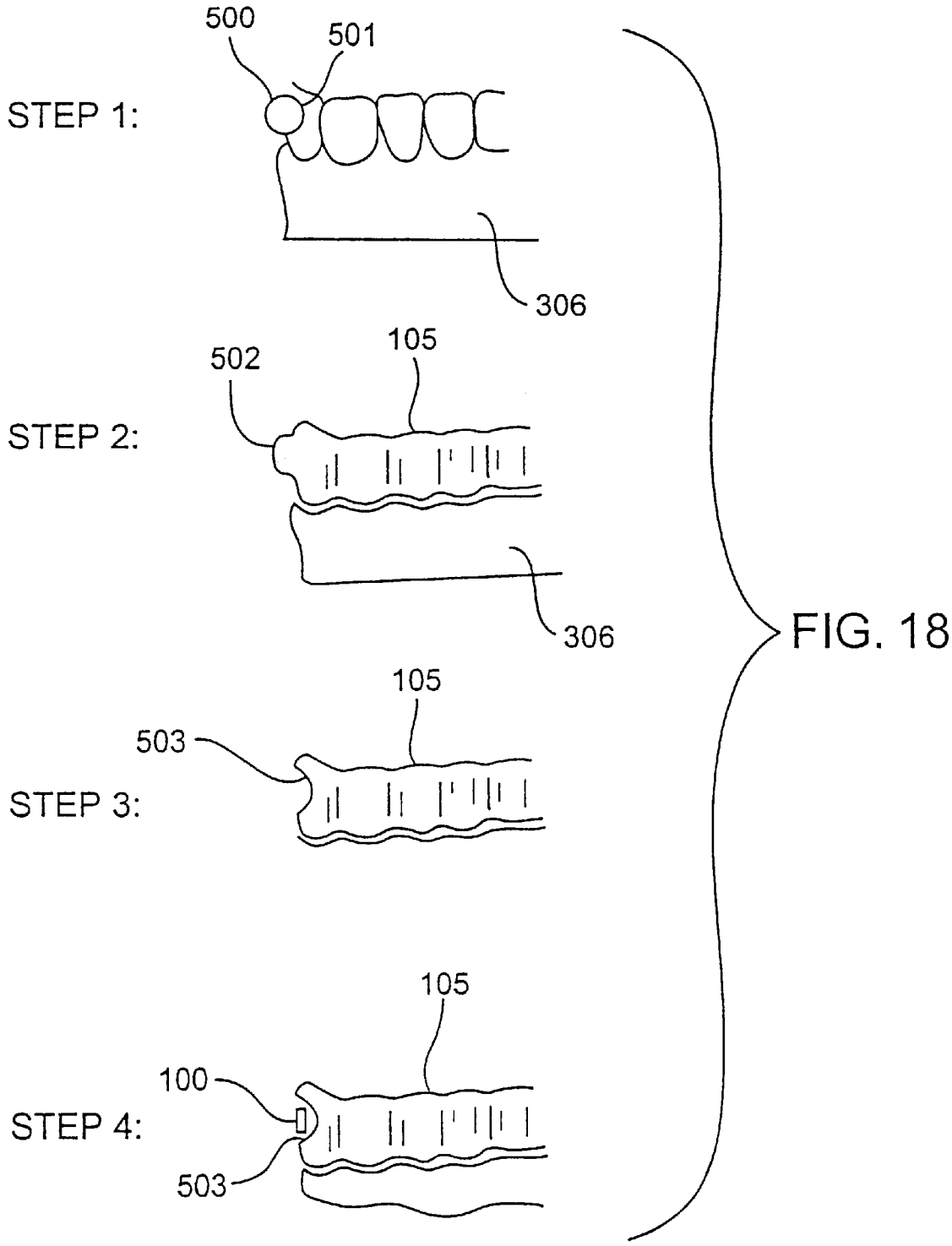
500
501
STEP 1:
306
105
502
STEP 2:
306
105
503
STEP 3:
105
100
STEP 4:
503

FIG. 18

ATTACHMENT DEVICES AND METHOD FOR A DENTAL APPLICANCE

CROSS-REFERENCES TO RELATED APPLICATIONS

This application claims the benefit of provisional application No. 60/110,881, filed Dec. 4, 1998. This application is also a continuation-in-part of application Ser. No. 09/466,353, filed Dec. 17, 1999, which was a continuation of PCT/US98/12861, filed Jun. 19, 1998, which was a continuation-in-part of application Ser. No. 08/947,080, filed on Oct. 8, 1997, now U.S. Pat. No. 5,975,893, which claimed the benefit of provisional application No. 60/050,342, filed on Jun. 20, 1997. This application is also a continuation-in-part of application No. 09/250,962, filed on Feb. 16, 1999, now U.S. Pat. No. 6,183,248, which claimed the benefit of provisional application No. 60/110,189, filed on Nov. 30, 1998. This application is also a continuation-in-part of application Ser. No. 9/169,034, pending filed on Oct. 8, 1998, which was a continuation-in-part of application Ser. No. 08/947,080, filed on Oct. 8, 1997, now U.S. Pat. No. 5,975,893, which claimed the benefit of provisional application No. 60/050,342, filed on Jun. 20, 1997. The full disclosures of each of these applications are incorporated herein by reference.

BACKGROUND OF THE INVENTION

The present invention is related generally to the field of orthodontics. More particularly, the present invention is related to improved systems and methods for removably attaching a dental positioning appliance to the dental features of a patient during orthodontic treatment.

Orthodontic treatments involve repositioning misaligned teeth and improving bite configurations for improved cosmetic appearance and dental function. Repositioning teeth is accomplished by applying controlled forces to the teeth over an extended period of time. This is conventionally accomplished by wearing what are commonly referred to as "braces." Braces comprise a variety of appliances such as brackets, bands, archwires, ligatures, and **0**-rings. The brackets and bands are bonded to the patient's teeth using a suitable material, such as dental adhesive. Once the adhesive has set, the archwire is attached to the brackets by way of slots in the brackets. The archwire links the brackets together and exerts forces on them to move the teeth over time. Twisted wires or elastomeric **0**-rings are commonly used to reinforce attachment of the archwire to the brackets. Attachment of the archwire to the brackets is known in the art of orthodontia as "ligation" and wires used in this procedure are called "ligatures." The elastomeric **0**-rings are called "plastics."

After the archwire is in place, periodic meetings with the orthodontist are required, during which the patient's braces will be adjusted. This involves installing different archwires having different force-inducing properties or by replacing or tightening existing ligatures. Between meetings, the patient may be required to wear supplementary appliances, such as elastic bands or headgear, to supply additional or extraoral forces.

Although conventional braces are effective, they are often a tedious and time consuming process requiring many visits to the orthodontists office. Moreover, from a patient's perspective, they are unsightly and uncomfortable. Moreover, the archwire and ligatures which connect the brackets in a continuous network make brushing, flossing between the teeth and other dental hygiene procedures

difficult, possibly contributing to the development of gingivitis. Consequently, alternative orthodontic treatments are needed. In particular, it would be desirable to use appliances which can be removed by the patient during daily dental hygiene routines, while participating in athletic activities, or for cosmetic purposes.

A particularly promising approach relies on the use of elastic positioning appliances for realigning teeth. Such appliances comprise a thin shell of elastic material that generally conforms to a patient's teeth but is slightly out of alignment with the initial tooth configuration. Placement of the elastic positioner over the teeth applies controlled forces in specific locations to gradually move the teeth into the new configuration. Repetition of this process with successive appliances comprising new configurations eventually move the teeth through a series of intermediate configurations to a final desired configuration. A full description of an exemplary elastic polymeric positioning appliance is described in U.S. Pat. No. 5,975,893, and in published PCT application WO 98/58596 which designates the United States and which is assigned to the assignee of the present invention. Both documents are incorporated by reference for all purposes.

In addition to their ease of use, polymeric positioning appliances are generally transparent, providing an improved cosmetic appearance, and impart substantial force on the teeth, due to stiffness of the appliance. The stiffness of an elastic positioning appliance is a result of the modulus of the thermoformable polymer materials from which it is made. The higher the modulus of the materials, the higher the stiffness of the appliance. When a patient positions such an appliance over a prescribed group of teeth, one or more of the teeth will provide a base or anchor region for holding the positioning appliance in place while the stiffness of the polymeric material will impart a resilient repositioning force against one or a portion of the remaining teeth. By designing the appliance to cover the teeth, a much larger contact surface area is afforded compared to traditional spring retainers and wire-based appliances. However, such anchoring and repositioning abilities of removable elastic positioning appliances are still dependent on the physical features and configuration of the patient's teeth, palette, and previous dental work, to name a few. For example, shell-like elastic polymeric positioning appliances have difficulty applying certain forces to individual teeth, such as extrusive force (e.g., pulling or raising a tooth relative to the jaw).

Thus, it would be desirable to provide tooth positioners, systems, and methods which apply adequate force in desired directions to selected teeth at specific times during treatment. In particular, it would be desirable to enable the fabrication and use of removable positioners and systems which can apply extrusive, rotational, and other directional forces which have heretofore been difficult to apply with removable positioners. It would also be desirable to reduce the cost of the orthodontic treatment and retain the patient benefits of a removable appliance in cases where they might not otherwise be available. At least some of these objectives will be met by the designs and methods of the present invention described hereinafter.

SUMMARY OF THE INVENTION

The present invention provides improved devices, systems and methods for removably attaching a dental positioning appliance to the dental features of a patient during orthodontic treatment. Such removable dental positioning appliances usually comprise an elastic polymeric shell having a cavity for receiving at least some of a patient's teeth

and are often preferred over conventional braces for tooth repositioning due to comfort, appearance and ease of use. These appliances function by applying force to specific surfaces of the teeth or dental features to cause directed movement. However, the type of movement and level of force applied is usually dependent on the surface characteristics and positions of the dental features. In many cases, the native tooth surface(s) and other dental features of a patient are inadequate to provide sufficient anchoring or to impart sufficient force on the teeth to be repositioned. To overcome these limitations, the present invention uses one or more attachment devices which may be attached to preselected attachment points on the teeth or dental features to provide the appropriate physical leverage. Specific design and location of these attachment devices may provide newly achievable and/or more effective repositioning forces, anchoring ability and appliance retention. The systems and methods of the present invention provide the design, production and use of such attachment devices with removable dental positioning appliances in orthodontic treatment.

The use of attachment devices in combination with removable dental positioning appliances provides the patient with the benefits of removable appliances while retaining the ability to extrude, rotate, and otherwise manipulate teeth as with conventional braces. Like conventional braces, attachment devices may be bonded to the surface of the teeth in order to provide physical features which facilitate the application of controlled force. The attachment devices of the present invention may have a very simple construction, in some instances being only a bump, bead, wedge, or other body or structure which can be fixedly attached to the surface of a tooth or other dental feature in order to transmit force generated by the dental positioning appliance to the dental feature and/or to anchor the positioning appliance to teeth in order to permit the appliance to apply forces elsewhere in the patient's teeth. In such instances, the attachment device acts simply as a handle or lever to assist in the transmission of force between the teeth and the dental positioning appliance. In other instances, the attachment device may feature a hook, similar in design to those used for mounting elastic bands. The hook may be engaged with a number of ligatures, bands, filaments, coils or other connecting members to effect repositioning of the teeth, usually in combination with the dental positioning appliance. The hook may serve as an anchor in the repositioning of other teeth, or it may serve as a point of purchase to apply directed force to the surface of the tooth to which it is bonded.

The attachment devices of the present invention, unlike conventional braces, are typically small, infrequent, (i.e., present on very few of the patient's teeth) unnoticeable to others, and do not interfere with dental hygiene practices. Usually, the attachment device will have a small base e.g., up to 4 mm across (mesial-distal) and up to 6 mm long (gingiva-crown). An attachment device body may typically protrude up to a maximum of 2.5 mm. This is significantly smaller than standard brackets or bands used in convention braces which may protrude up to 4 mm. The devices may be bonded in specific locations throughout the dentition where appropriate and this may only be required at one or a few locations. Thus, the infrequency of the device, in addition to the size, also reduces its visibility and awareness to the patient. Likewise, the attachment device may be bonded to any surface of the teeth, including lingual surfaces which would allow the devices to be largely unnoticeable to others. In these cases, shape and design considerations would prevent any irritation to the contacting tissues, such as the tongue, inner lip and inner cheek. When placed in visible areas, the attachment device may be color matched to the dental surface to further diminish its visibility. In addition, such attachment devices are typically designed to removably attach to a removable dental appliance. Thus, when the appliance is removed, routine brushing, flossing and dental care may be undertaken in the usual manner.

Brackets used with conventional braces, such as those used to support elastic bands or headgear, are limited in design and therefore application of use. Generally, these attachment devices have a large profile, protruding 2–4 mm, which is not conducive to use with elastic positioning appliances or other devices designed to be removably positioned over the attachment device. Likewise, their surface geometry is limited to a few prescribed functions which are specific to use with conventional braces. Thus, they are not adequately capable of providing functions necessary to the present invention, such as removably attaching a dental positioning appliance.

In a first aspect of the present invention, the attachment devices are comprised of an attachment body having a base. The base may simply be the portion of the attachment body which will be bonded to the surface of the dental feature. Alternatively, the base may be an enlarged portion of the body, designed to increase the surface area of the bond. Likewise, the base may be removable or permanently attached. The attachment body may feature a variety of designs, most commonly being bumps, beads, wedges, also including but not limited to hooks, clasps, bands, brackets, buttons, snaps, springs, levers, rods, tubes, coils, indents and/or other protrusions. Each design may serve one or a number of purposes in repositioning of the teeth. For example, a clasp may be used to attach a portion of a removable positioning appliance to the attachment device. This attachment device design may be desired for anchoring of the appliance or applying force to the dental feature to which the attachment device is bonded. Additional devices may be used in conjunction with the attachment body to attach the appliance to the attachment device. For example, adhesives, flexible bands or connecting ligatures may be used in conjunction with the design of the attachment body to aid in connection to the appliance. In one such case, an attachment body located on the lowerjaw may be attached to a removable appliance placed on the upperjaw by means of a flexible band. This may afford desired force vectors that are unobtainable by other means. Alternatively, the attachment body may be comprised of specific design features to aid in properly seating a removable elastic repositioning appliance, in addition to anchoring the appliance in place to apply repositioning forces. A preferred embodiment of these design features includes an attachment body with a sloping face e.g., a wedge.

The phrase "dental feature" will apply to any portion of the patient's teeth which may be contacted by a dental positioning appliance and/or engaged by an attachment device. Usually, the dental feature will be a portion of a surface of a natural tooth, but in some instances could be a portion or a surface of an artificial tooth, e.g., a dental implant, or a non-natural surface or repair of a native tooth, e.g., a filling, crown, inlay, restoration, or the like. Thus, the phrase dental feature will generally refer to all natural and non-natural teeth in a patient's dentition. In a second aspect of the present invention, the attachment device is bonded to and/or formed over a dental feature in a desired location. The attachment device may be bonded to any of these features with any suitable bonding material, typically dental restorative composites. The location in which one or more of these

attachment devices are bonded is dependent upon the desired repositioning goal. The devices may be bonded to any surface of the dental features and may be placed singly or in groups. Likewise, a given attachment device may be bonded to surfaces of more than one dental feature. In a preferred embodiment, an attachment device may placed on each of two teeth located on opposite sides of one or a contiguous group of teeth. When an elastic positioning appliance is inserted and attached to the two attachment devices, an intrusive force may be applied to the tooth or teeth in between. This is counterintuitive to the methods of conventional orthodontics in which brackets are bonded to the teeth that require repositioning.

In a third aspect of the present invention, the attachment devices may be constructed from variety of materials, including but not limited to metals, glass or silicone filled polymers, and other composite materials. Such materials are typically designed to be chip, break and shear resistant for durability. The base of the attachment device may be constructed from the same or from different materials as the attachment body. Likewise, the attachment body may be permanently or removably mounted on the base or the body and base may be constructed as one entity.

In a preferred embodiment, the attachment device may be constructed from a polymer material or combination of materials which have been formulated to be sensitive to an environmental condition or external stimulus. Upon exposure to such a condition or stimulus, the material may undergo a predetermined state change, which may be temporary or permanent. For example, upon exposure, a rigid material may become temporarily malleable, allowing changes in geometry to be made. Upon removal of the condition or stimulus, the material may return to its original rigid state and geometry or it may return to its original rigid state with the new geometry. In the former case, such stimulus may be used to facilitate coupling an attachment device to an elastic positioning appliance. The stimulus may alter the geometry of the attachment device during insertion and placement of the appliance. Removal of the stimulus may allow the device to return to its original geometry for application of repositioning forces. A full description is provided in application Ser. No. 09/250,262, the full disclosure of which is incorporated herein by reference. In the latter case, such stimulus may be used to facilitate bonding of the attachment device to the surface of the dental feature. The stimulus may alter the state and geometry of the attachment device, or simply the base, to conform it to the surface of the dental feature to which it is to be bonded. Upon removal of the stimulus, the attachment device may remain in the new geometry, providing a larger contacting surface area for bonding.

Similarly, a malleable material may be molded into a desired form and polymerized by exposure to an environmental condition or stimulus. Such polymerization may permanently hold the material in the desired form. This may be useful in both constructing the attachment device and bonding the device to a dental surface. For example, malleable material may be inserted in a mold of an attachment device. Polymerization, as described above, may result in a rigid attachment device in the molded form. In a preferred embodiment, the mold of the attachment device may be an impression in the wall of an elastic positioning appliance. This may ensure proper surface geometry for association between the attachment device and the appliance. Likewise, polymerization of the material while the appliance is in place over the dental features may simultaneously bond the attachment device to the dental feature. This may ensure proper alignment of the attachment device and the receiving impression in the appliance, and it may also preclude the need for additional bonding materials.

In a fourth aspect of the present invention, methods are provided to produce and/or bond an attachment device to a dental feature. Three preferred embodiments are applicable for use with elastic repositioning appliances or similarly fabricated devices and are as follows: 1) basic casting, 2) casting with polymerizing material and 3) computer-aided casting with polymerizing material. An example of basic casting involves producing two identical attachment devices by any means and comprised of any material(s). One attachment device may be placed in a desired location on a dental surface of the patient. The other attachment device may be placed in the identical location on a mold replicating at least the dental surface. An elastic positioning appliance or similar device may be formed over the mold containing the attachment device. Upon removal, a negative impression of the attachment device may be seen in the wall of the elastic positioning appliance. Therefore, when the appliance is inserted and seated in position by the patient, the impression in the appliance will correspond with the attachment device bonded to the dental surface. If the attachment device is to be used as a point of purchase to effect movement of the dental feature to which it is attached, the attachment device may be bonded to the dental feature in a position or orientation that differs from the mold. Therefore, when the appliance is inserted by the patient, the impression in the appliance will be slightly out of alignment with the attachment device. This will apply force to the attachment device, resulting in gradual repositioning of the device and underlying dental feature.

The method of casting with polymerizing material is similar to basic casting. Like basic casting, an attachment device of any design and material is placed in a desired location on a mold replicating at least the dental surface of interest. Again, an elastic positioning appliance or similarly fabricated device may be formed over the mold containing the attachment device, creating a negative impression of the attachment device in the wall of the appliance. At this point, a malleable polymerizing material may be placed into the negative impression in the appliance. When the appliance is inserted and seated in position in the oral cavity, the polymerizing material will be in contact with the dental surface and will be in the proper position. The material may be polymerized by any means, typically by an external stimulus or environmental condition. Polymerization may simultaneously harden the material and bond the material to the dental surface. Upon removal of the appliance, the formed attachment device may remain in place on the dental surface.

The method of computer-aided casting with polymerizing material is similar to the methods described above, yet differs in the steps of creating the appliance. Here, a 3-D computerized image of the attachment device is virtually placed in a desired location on an image of the dental surface. A mold is produced from the images using any computer-guided model fabrication system, such as stereolithography, CNC machining, and laser machining. The result is a mold of at least the dental surface of interest with a replica of the attachment device in proper position. At this point, an elastic positioning appliance or similarly fabricated device may be formed over the mold containing the attachment device, creating a negative impression of the attachment device in the wall of the appliance. Again, a malleable polymerizing material may be placed into the negative impression in the appliance. When the appliance is inserted and seated in position in the oral cavity, the material

may be polymerized, leaving a formed attachment device in place on the dental surface when the appliance is removed.

In a fifth aspect of the present invention, an additional method is provided to produce and/or bond an attachment device to a dental feature. Two preferred embodiments are applicable for use with any dental appliances. The first embodiment involves a multi-tooth template which may be used to produce and/or bond an attachment device to a dental feature. The multi-tooth template may be thin and flexible to fit over multiple dental features at once, allowing multiple attachment devices to be placed at the same time. Receptacles may be present in the template to receive a polymerizing material. When the template is inserted and seated in position in the oral cavity, the polymerizing material will be in contact with the dental surface and will be in the proper position. The material may be polymerized by any means, typically by an external stimulus or environmental condition. Polymerization may simultaneously harden the material and bond the material to the dental surface. Upon removal of the template, the formed attachment device may remain in place on the dental surface. This method may be similar or identical to casting with polymerizing material and computer-aided casting with polymerizing material, however it may differ in that the template may not be used as the repositioning appliance. This difference may afford the use of template designs that are not applicable to repositioning appliances. For example, the template may be comprised of a material that is unsuitable for a repositioning appliance, or it may contain additional design features, such as handles, that would interfere with such usage. Similarly, the template may be fabricated from a mold of the patient's present tooth configuration, rather than the tooth configuration prescribed by an elastic positioning appliance. This may facilitate the method of attachment device production and/or bonding due to the closer fit of the template to the tooth configuration.

The second embodiment involves a single-tooth template which may be used to produce and/or bond an attachment device to a dental feature. The single-tooth template may be more rigid and may fit over a single dental feature. The template may be comprised of one or more receptacles to receive polymerizing material. When applied to the target surface of the dental feature, the material may be polymerized by any means previously described. The resulting attachment device is properly shaped and bonded in place. Alternatively, the single-tooth template may be comprised of a receptacle that is rigid, to receive the polymerizing material, surrounded by a thin, film-like portion of material that conforms to the dental feature. The thin, flexible area may contain an adhesive with which to hold the template in place on the dental feature. The material may then be polymerized to form the attachment device. When the procedure is complete, the template may be peeled off and discarded.

Single-tooth and multi-tooth templates may allow the production and placement of one or more attachment devices to a dental feature independent of the geometry of certain adjacent dental features. Thus, a template may be used throughout various stages of orthodontic repositioning treatment. This may be useful to replace an attachment device which has broken off mid-treatment or to place new attachment devices throughout treatment. As described above, at least one receptacle may be present in the template to receive a polymerizing material. When the template is inserted and seated in position in the oral cavity, the polymerizing material will be in contact with the dental surface and will be in the proper position. The material may be polymerized by any means, typically by an external stimulus or environmental condition. Polymerization may simultaneously harden the material and bond the material to the dental surface. Upon removal of the template, the formed attachment device may remain in place on the dental surface. Alternatively, templates may be used to bond any attachment device to a dental feature surface. For example, a prefabricated attachment device may be bonded to a surface with the use of a template. An attachment device may be inserted in a receptacle of a template, adhesive applied to the base of the attachment device and the template applied to the dental surface. After bonding has occurred, the template may be removed. Thus, the template may provide proper positioning and orientation. Likewise, a template may be used to form an attachment device using a polymerizing material, and then used again to bond the attachment device to a dental surface.

In a sixth aspect of the present invention, a method is provided to improve the production of templates or elastic positioning appliances. In a preferred embodiment, additional structures are provided in the mold of the dental feature with desired attachment device. The structures may be of any geometry and are typically placed near the gingival surface. When a template or appliance is thermoformed over the mold and additional structures, the structures provide a protrusion which aids in drawing the template or appliance from the mold. The protrusion may then be removed before use.

In a further aspect of the present invention, a method is provided to further improve the production of templates or elastic positioning appliances. In some cases, it may be desired to alter a template or appliance after it has been removed from a mold. Such alterations may include trimming edges or removing portions to prevent interference with specific devices or dental features. For example, it may be desirable to produce an elastic appliance with a window in a particular location corresponding to the placement of an attachment device. To ensure proper location of the window, a structure may be provided in the mold at the same location to aid in the creation of the window. In a preferred embodiment, a structure of spherical geometry may be provided in the mold at the desired location. Thermoforming of the appliance may result in a spherical protrusion at the location of the structure. After removal of the appliance from the mold, the spherical protrusion may be removed by cutting, filing, sawing, or any other means of removal. Thus, a window with a shape corresponding to the cross section of the structure, in this case a circle, may remain. As a result, a template or positioning appliance may be produced to cover desired dental features or to provide windows to expose such features.

BRIEF DESCRIPTION OF THE DRAWINGS

FIG. **1** illustrates a patient's tooth having an attachment device of the present invention bonded thereon.

FIGS. **2**A and **2**B illustrate exemplary attachment devices having broad bonding bases attached thereto.

FIGS. **3**A and **3**B illustrate attachment devices similar to those illustrated in FIGS. **2**A and **2**B, except that the attachment base is integral with the attachment body.

FIGS. **4** and **4**A are top and side view, respectively, of an exemplary attachment device having a hemispherical attachment body in the form of a simple "bump."

FIG. **4**B is a perspective view of a similar attachment device with an elongated attachment body.

FIG. **5** illustrates an attachment device having an elastic band connected to a hook portion thereof.

FIG. **6** illustrates an attachment device similar to that shown in FIG. **4** which is attached to a positioning appliance via an adhesive layer.

FIG. **7** illustrates an exemplary wedge-shaped attachment device of the present invention in combination with a dental positioning appliance having cavities formed therein for removably receiving the attachment devices.

FIG. **8** is a detailed view of the attachment device of FIG. **7**.

FIGS. **9**A–**9**L are perspective views of a series of exemplary attachment devices with sloping angles constructed in accordance with the principles of the present invention.

FIGS. **10**A–**10**F are front views of a series of attachment devices having wedge-shaped structures with different front end geometries.

FIG. **11** illustrates a method according to the present invention for intruding a tooth located between a pair of teeth having attachment devices thereon.

FIGS. **12**A and **12**B illustrate the mounting of an attachment device according to the present invention to a tooth surface.

FIGS. **13**A–**13**D illustrate an embodiment of the method of basic casting.

FIGS. **14**A–**14**C illustrates features of the method of casting with a polymerizing material.

FIG. **14**D includes a series of cross-sectional views further describing the method of FIGS. **14**A–**14**C.

FIGS. **15**A–**15**C illustrates features of the method if computer-aided casting with polymerizing material.

FIG. **16** illustrates an embodiment of a multi-tooth template having a handle for use in in situ formation of attachment devices according to the methods of the present invention.

FIGS. **17**A and **17**B illustrate embodiments of single-tooth templates having handles for use in the methods of the present invention.

FIG. **18** illustrates a method according to the present invention for forming a window in a tooth positioning appliance using a feature formed in a mold according to the methods of the present invention.

DESCRIPTION OF THE SPECIFIC EMBODIMENTS

The present invention provides improved systems and methods for removably attaching a dental positioning appliance to the dental features of a patient during orthodontic treatment. Preferred embodiments involve elastic repositioning appliances or similarly fabricated devices, however the present invention is applicable to any type of removable appliance. Systems for removably attaching an appliance typically involve the use of one or more attachment devices positioned on at least one dental feature.

Referring to FIG. **1**, a preferred embodiment of an attachment device **100** is shown bonded to a tooth **103** above the gingiva **104**. The attachment device **100** may be comprised of an attachment body **101** having a base **102**, which may be integral or separate and permanently or removably joined. Additional embodiments of attachment bodies **101** are depicted in FIG. **2** and FIG. **3**. As seen in FIG. **2**, the attachment device **110** may have a base **102** which is broader than the attachment body **102** to increase bonding surface area. Alternatively, the base **102** may simply be an end of the attachment body **101** for direct bonding to the tooth **103**. Corresponding embodiments with such bases **102** are depicted in FIG. **3**. The devices **100** may be bonded to any surface of a dental feature and may be located in one or more locations.

Specific shapes and designs may be particularly useful in certain locations. For example, attachment devices **100** positioned on the lingual surfaces of the teeth would characteristically prevent irritation to contacting tissues, such as the tongue. FIG. **4** depicts preferred embodiments of round-shaped attachment bodies **101** for such a purpose. A side view of such an attachment device **100** is shown in FIG. **4**A. Bases **102** may be of any shape, thickness and orientation in relation to an attachment body **101**. Likewise, a base **102** may have more than one discrete attachment body **101**.

Additional devices may be used in conjunction with an attachment body **101** to attach an appliance to an attachment device **100**. For example, adhesives, flexible bands or connecting ligatures may be used in conjunction with the design of the attachment body **101** to aid in connection to the appliance. FIG. **5** depicts an attachment body **101** with a flexible band **200** to attach the body **101** to an appliance (not shown). The body **101** is shaped so as to receive the band **200** and hold it in place, for example in a hook shape. FIG. **6** is side view illustrating an attachment body **101** with an adhesive **201** to aid in attachment to an appliance **105**. Such an adhesive **201** may be any type of biocompatible material which may be applied by the patient, provided by the attachment device **100** or provided by the appliance **105**. Likewise, the adhesive **201** may provide adhesive qualities over variable lengths of time.

Referring now to FIG. **7**, a preferred embodiment of an attachment body **101** design is illustrated for use in aiding the proper seating of a removable elastic repositioning appliance **105** and anchoring the appliance **105** in place to apply repositioning forces. Such attachment bodies **101** may be located on any surface of a dental feature and may be placed singly or in groups. The design of the attachment body **101** may include a structure **300** which protrudes perpendicularly from the surface of the tooth **103**. As shown in FIG. **8**, the structure **300** may contain a sloping angle **301**, from the surface of the tooth **103** to the opposing end of the structure **300**, which is preferably less than 90 degrees. FIG. **9**A presents a perspective view of a variety of attachment devices **100** having sloping angles **301** as described. FIG. **9**B presents a perspective view of attachment devices **100** having a series protruding structures **300** with sloping angles **301**. These designs may provide a means for a type of ratcheting action that would allow an appliance to be seated or positioned at differing levels. It may be appreciated that such designs may serve the same function without sloping angles **301** and with differing geometries. Similarly, FIG. **10** presents a front view of a variety of attachment devices **100** having sloping angles **301**.

Referring back to FIG. **7**, when the elastic positioning appliance **105** is inserted for placement, the protruding structure **300** may grossly align with a matching negative impression **302** of the structure **300** formed into the appliance **105**. As the appliance **105** is seated, the slope of the protruding structure **300** may guide the appliance **105** into the proper position. Once in position, the attachment device **100** may serve as an anchor for the appliance **105** to apply repositioning forces. Additionally, the elastic appliance **105** and/or the attachment device **100** may change in shape, stiffness or orientation to implement such anchoring. These changes may be the result of state changes of one or more layers of the material when subjected to a certain environmental condition, such as non-physiologic pH, temperature, ionic strength or external stimulus.

Repositioning forces as a result of anchoring may take many forms. In a preferred embodiment illustrated in FIG. **11**, attachment devices **100** may be placed to serve as anchors to apply directed intrusive repositioning forces. As shown in Step **1**, two attachment devices **100** may be placed on each of two teeth **103** located on opposites sides of one or a contiguous group of between teeth **103'**. In Step **2**, an elastic repositioning appliance **105** is produce with an inset profile **303** at the location in which intrusive force is to be applied. In Step **3**, the appliance **105** is inserted for placement over the teeth **103**,**103'**. In Step **4**, the appliance **105** is attached to the attachment devices **100** which serve to anchor the appliance **105**. As a result, intrusive forces, depicted by a downward arrow **304**, are applied to the between teeth **103'**. Over time, the intrusive forces will affect intrusion of the between teeth **103'**, as shown in Step **5**. It may be appreciated that the profile of the appliance **105** may take a variety of forms to create intrusive forces, depending on the overall configuration of the teeth **103** and the between teeth **103'**. For example, in the case where the between teeth **103'** are initially more extruded than the adjacent teeth **103**, the appliance **105** may have a profile that is generally flat, with no inset profile **303**. Thus, when the appliance **105** is attached to the attachment devices **100**, intrusive forces will again be applied to the between teeth **103'**. The use of bonded devices, such as attachment devices **100**, to apply repositioning forces to a tooth without bonded devices is distinct in that it is counterintuitive to the methods of conventional orthodontics in which brackets are bonded to the teeth that require repositioning.

As previously described, the attachment devices **100** may be constructed from a variety of materials, including materials which have been formulated to be sensitive to an environmental condition or external stimulus. For example, upon exposure, a rigid material may become temporarily malleable, allowing changes in geometry to be made. Upon removal of the condition or stimulus, the material may return to its original rigid state with the new geometry. This may be particularly useful in conforming the geometry of an attachment device **100** to better interface an uneven or curved surface. As shown in FIG. **12**A, an attachment device **100** may be originally constructed to have an attachment base **102** which does not conform to the dental surface **305** to which it is to be bonded. In this case, the material may be exposed to a stimulus to which it is sensitive, initiating a state change in the material. Such a stimulus may be a change in the oral environment to a non-physiologic pH, temperature, ionic strength or liquid absorption. Likewise, the stimulus may be of an external source such as light, magnetism, electricity, radiowaves, or chemicals. Such a state change may allow the material to become flexible so the attachment base **102** may conform to the dental surface **305**, as shown in FIG. **12**B.

Similarly, a permanent state change in the material may occur as a result of applying a stimulus. Thus, the material may be malleable in its initial state, allowing it to be molded into a desired shape. The material may then be polymerized due to application of a stimulus. Likewise, polymerization may occur over time from the point of initial formulation, as in the case of an air or moisture cure. Polymerization may simultaneously harden the material and form a bond between the material and any interfacing surface.

A series of methods are provided based on these polymerization characteristics to produce and/or bond an attachment device **100** to a dental feature, such as a tooth **103**. Three preferred embodiments are applicable for use with elastic positioning appliances and are as follows: 1) basic casting, 2) casting with polymerizing material and 3) computer-aided casting with polymerizing material.

FIGS. **13**A–D characterize an embodiment of the method of basic casting. Basic casting involves first producing two identical attachment devices **100** by any means. As shown in FIG. **13**A, one attachment device **100** may be placed in a desired location on a mold **306** which replicates the dental feature of interest, in this case a tooth **103**. As shown in FIG. **13**B, an elastic positioning appliance **105** may be formed over a mold **306** containing the attachment device **100**. This is typically accomplished by heating a thermoformable polymer material and applying vacuum or pressure to form the polymer to the mold. Alternatively, reaction casting may be used to produce such an appliance. Upon removal, FIG. **13**C, a negative impression **302** of the attachment device may be seen in the wall of the appliance **105**. The other attachment device **100** is placed in the identical location and orientation on the dental feature of the patient corresponding to the mold **306**. When the appliance **105** is inserted and seated in position, the impression **302** in the appliance **105** will correspond with the attachment device **100** bonded to the tooth **103**, as illustrated in FIG. **13**D.

The method of casting with a polymerizing material is similar to the method of basic casting. In one embodiment, an elastic positioning appliance **105** is formed over a mold **306** containing an attachment device **100**, as previously depicted in FIGS. **13**A–C. At this point, a malleable polymerizing material **400** may be placed into the negative impression **302** in the appliance **105**. FIG. **14**A is an enlarged view of the underside of a portion of the appliance **105**, revealing a receiving cavity **401** for a tooth **103** and the negative impression **302** of an attachment device **100** filled with a polymerizing material **400**. When the appliance **105** is seated in position in the oral cavity, FIG. **14**B, the polymerizing material **400** will be in contact with the desired dental surface, in this case a tooth **103**, and will be positioned in the proper location. The material **400** may be polymerized (depicted by jagged arrow **402**) by any means, such as an external stimulus. Upon removal of the appliance **105**, the formed attachment device **100** may remain in place on the tooth **103**, as shown in FIG. **14**C. Cross-sectional views of this method or presented in FIG. **14**D.

The method of computer-aided casting with polymerizing material **400** is similar to the methods described above, yet differs in the steps of creating the appliance **105**. In one embodiment, a computerized image of the attachment device **100** is virtually placed in a desired location on an image of the dental surface. From these images, a mold **306** is produced comprising the dental surface of interest, in this case a tooth **103**, with an attachment device replica **403** in proper position. At this point, an elastic positioning appliance **105** may be formed over the mold **306**, as seen in FIG. **15**A. Upon removal, FIG. **15**B, a negative impression **302** of the attachment device **100** may be seen in the wall of the appliance **105**. At this point, the attachment device **100** may be formed and bonded to the dental feature by methods previously depicted in FIGS. **14**A–C.

Two additional methods are provided to produce and/or bond an attachment device **100** to a dental feature, such as a tooth **103**. These embodiments are applicable for use with any dental appliance. The first embodiment involves a multi-tooth template. The multi-tooth template may be similar or identical to an elastic repositioning appliance, and it may be used for casting with polymerizing material and computer-aided casting with polymerizing material, as described above. However, it may differ in that the template may not be used as the repositioning appliance. Therefore,

multi-tooth template designs may include features that are not applicable to such use. For example, in FIG. **16**, one embodiment depicts a type of handle **403** with which to easily place and remove the multi-tooth template **404**. As shown, the template **404** may contain receiving cavities **401** for only a select portion of teeth and it may include negative impressions **302** for attachment devices **100** on more than one tooth **103**.

The second embodiment involves a single-tooth template. The single-tooth template is similar to the multi-tooth template **404**, however it may be more rigid as it is designed to fit over a single dental feature. As shown in FIG. **17**A, one embodiment may contain a portion of a receiving cavity **401** which conforms to a portion of the surface of the target tooth **103**. It may also contain a type of handle **403** to aid in placement of the single-tooth template **405**. Production and bonding of an attachment device **100** to the tooth **103** may be accomplished by casting with polymerizing material or computer-aided casting with polymerizing material. Similarly, an additional embodiment of a single-tooth template **405** may be seen in FIG. **17**B. Here the template **405** may be thin and flexible to conform to a portion of a dental feature. It may contain adhesive ring **406** around the negative impression **302** of the attachment device **100**. The adhesive ring **406** will hold the template **405** in place on the dental feature, in this case a tooth **103**, throughout the casting with polymerizing material or computer-aided casting with polymerizing material to produce and bond the attachment device **100**. A pull-tab **407** may be present to facilitate a peeling removal of the template **405**.

A method to further aid in production of templates or elastic positioning appliances in depicted in FIG. **18**. Here, an embodiment of an improved method for producing a window of particular shape and location in an elastic appliance is presented to prevent interference with specific devices or dental features. As shown in Step **1**, a mold **306** is created with an added structure **500** in the location where the window is desired. The shape of the structure **500** should provide a cross-section (dashed line **501**) that will form the shape of the window. In this example, the structure **500** is a sphere having a circular cross-section **501**. In Step **2**, a polymer sheet is thermoformed over the mold **306**, and an elastic appliance **105** is produced with a spherical protrusion **502** in the location of the structure **500**. After removal of the appliance **105** from the mold **306**, the spherical protrusion **502** may be removed, as shown in Step **3**, leaving a window **503** with the same shape as the cross-section **501** of the structure **500**. In Step **4**, the appliance **105** may be positioned on the dental features of the patient, allowing an attachment device **100** to be accessible through a window **503**.

What is claimed is:

1. A method for producing a dental positioning appliance which is removably attachable to at least one dental feature to effect or enhance dental positioning, said method comprising:

providing a mold of dental features wherein the mold has at least one attachment device mounted or formed on a surface of the mold;

forming the dental appliance over the mold with the attachment device; and

removing the dental appliance from the mold, wherein the appliance has a receptacle corresponding to the attachment device and tooth receiving cavities corresponding to the dental features of the mold;

providing additional structures in the mold of dental features, wherein the structures provide a guide to demarcate a portion of the appliance in a desired location; and

altering a portion of the appliance demarcated by the structure.

2. A method as in claim **1**, wherein the method further comprises:

providing additional structures on the mold of dental features, wherein the appliance has protrusions corresponding to the structures; and

removing the appliance from the mold utilizing the protrusions, whereby removal is aided.

3. A method as in claim **1**, wherein the altering step comprises cutting out the portion of the appliance demarcated by the structure, whereby a window is created to expose the underlying dental feature.

4. A method for producing a digital model, said method comprising:

providing a digital model of at least one dental feature;

providing a digital model of at least one attachment device; and

positioning the digital model of the attachment device on the digital model of the dental feature to produce a combined computerized model.

5. A method for producing a dental positioning appliance which is removably attachable to at least one dental feature to effect or enhance dental positioning, said method comprising:

providing a combined digital model of at least one dental feature having at least one attachment device;

producing a mold from the combined digital model, wherein the mold has the attachment device on a surface thereof;

forming a dental positioning appliance over the mold; and

removing the appliance from the mold, wherein the appliance has a receptacle corresponding to the attachment device and cavities corresponding to the dental features.

6. A method as in claim **5**, wherein the method further comprises:

providing a digital model of an additional structure;

positioning the digital model of the additional structure on the digital model of dental features, wherein the appliance has protrusions corresponding to the structures; and

removing the appliance from the mold utilizing the protrusions, whereby removal is aided.

7. A method as in claim **5**, wherein the method further comprises:

providing a digital model of an additional structure;

positioning the digital model of the additional structure on the digital model of dental features, wherein the structures provide a guide to demarcate a portion of the appliance in a desired location; and

altering a portion of the appliance demarcated by the structure.

8. A method as in claim **7**, wherein the altering step comprises cutting out the portion of the appliance demarcated by the structure, whereby a window is created to expose the underlying dental feature.

9. A method for moving teeth, said method comprising:

securing an attachment device on a dental feature;

removably positioning a first dental positioning appliance over the dental feature wherein the appliance comprises an elastic polymeric shell having a cavity which receives the dental feature and a receptacle which receives the attachment device; and

removably positioning at least a second dental positioning appliance over the dental feature, wherein the second dental positioning appliance comprises an elastomeric shell having a cavity which receives the dental feature and a receptacle which receives the attachment device, wherein at least one of the receptacle and the cavity has a different configuration than that of the first dental positioning appliance.

10. A method as in claim **9**, wherein the appliances apply repositioning force to the attachment device.

11. A method as in claim **10**, wherein the appliances are anchored with the attachment device and apply a repositioning force to another dental feature.

12. A method as in claim **9**, further comprising removably positioning at least a third dental positioning appliance over the dental feature, wherein the third dental positioning appliance comprises an elastomeric shell having a cavity which receives the dental feature and a receptacle which receives the attachment device, wherein at least one of the receptacle and the cavity has a different configuration than that of the first and second dental positioning appliances.

13. A method as in claim **12**, wherein at least five dental positioning appliances having receptacles are successively placed over the dental feature.

14. A method as in claim **12**, wherein at least ten dental positioning appliances having receptacles are successively placed over the dental feature.

15. A method as in claim **9**, wherein the dental positioning appliances apply an extrusive force to the attachment device.

16. A method as in claim **9**, wherein the dental positioning appliances apply a rotational force to the attachment device.

* * * * *

UNITED STATES PATENT AND TRADEMARK OFFICE

CERTIFICATE OF CORRECTION

PATENT NO. : 6,309,215 B1
APPLICATION NO. : 09/454278
DATED : October 30, 2001
INVENTOR(S) : Phan et al.

It is certified that error appears in the above-identified patent and that said Letters Patent is hereby corrected as shown below:

Title Page

Item (63), please delete "Continuation-in-part of application No. 09/466,353, filed on Dec. 17, 1999, which is a continuation of application No. PCT/US98/12861," and insert -- Continuation-in-part of application No. PCT/US98/12861 --.

Signed and Sealed this

Second Day of January, 2007

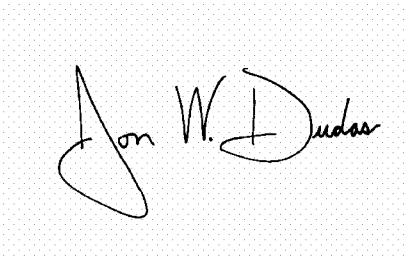

JON W. DUDAS
Director of the United States Patent and Trademark Office

US006309215C1

(12) EX PARTE REEXAMINATION CERTIFICATE (5717th)

United States Patent
Phan et al.

(10) **Number: US 6,309,215 C1**
(45) **Certificate Issued: Mar. 20, 2007**

(54) **ATTACHMENT DEVICES AND METHOD FOR A DENTAL APPLIANCE**

(75) Inventors: **Loc X. Phan**, San Francisco, CA (US); **Muhammad Chishti**, Sunnyvale, CA (US); **Ross J. Miller**, Sunnyvale, CA (US)

(73) Assignee: **Align Technology, Inc.**, Sunnyvale, CA (US)

Reexamination Request:
No. 90/007,534, May 6, 2005

Reexamination Certificate for:

Patent No.:	**6,309,215**
Issued:	**Oct. 30, 2001**
Appl. No.:	**09/454,278**
Filed:	**Dec. 3, 1999**

Related U.S. Application Data

(63) Continuation-in-part of application No. 09/466,353, filed on Dec. 17, 1999, which is a continuation of application No. PCT/US98/12861, filed on Jun. 19, 1998, which is a continuation-in-part of application No. 08/947,080, filed on Oct. 8, 1997, now Pat. No. 5,975,893, application No. 09/454,278, which is a continuation-in-part of application No. 09/250,962, filed on Feb. 16, 1999, now Pat. No. 6,183,248, and a continuation-in-part of application No. 09/169,034, filed on Oct. 8, 1998, which is a continuation-in-part of application No. 08/947,080, filed on Oct. 8, 1997, now Pat. No. 5,975,893.

(60) Provisional application No. 60/110,881, filed on Dec. 4, 1998, provisional application No. 60/050,342, filed on Jun. 20, 1997, and provisional application No. 60/110,189, filed on Nov. 30, 1998.

(51) **Int. Cl.**
A61C 3/00 (2006.01)

(52) **U.S. Cl.** **433/24**; 433/6
(58) **Field of Classification Search** 433/24, 433/6
See application file for complete search history.

(56) **References Cited**

U.S. PATENT DOCUMENTS

2,467,432	A	4/1949	Kesling
3,407,500	A	10/1968	Kesling
3,600,808	A	8/1971	Reeve
3,683,502	A	8/1972	Wallshein

(Continued)

FOREIGN PATENT DOCUMENTS

AU	3031677	5/1979
AU	5598894	6/1994

(Continued)

OTHER PUBLICATIONS

Declaration of Richard Ridgley, Mar. 16, 2005, total pages 5.

(Continued)

Primary Examiner—Michael O'Neill

(57) **ABSTRACT**

The present invention provides improved systems and methods for removably attaching a dental positioning appliance to the dental features of a patient during orthodontic treatment. Such removable dental positioning appliances are often preferred over conventional braces for tooth repositioning due to comfort, appearance and ease of use. These appliances function by applying force to specific surfaces of the teeth or dental features to cause directed movement. However, the type of movement and level of force applied is usually dependent on the surface characteristics and positions of the dental features. In many cases, these aspects are inadequate to provide sufficient anchoring or to impart considerable force on the teeth to be repositioned. Such limitations may be diminished with the use of one or more attachment devices which may be positioned on the teeth or dental features to provide the appropriate physical features. Specific design and location of these attachment devices may provide newly achievable and/or more effective repositioning forces, anchoring ability and appliance retention. The systems and methods of the present invention provide the design, production and use of such attachment devices with removable dental positioning appliances in orthodontic treatment.

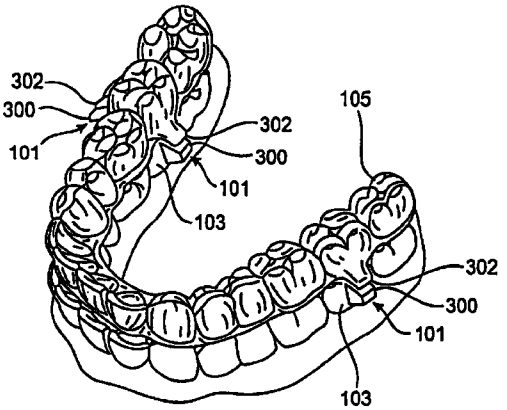

U.S. PATENT DOCUMENTS

3,738,005	A	6/1973	Cohen et al.
3,916,526	A	11/1975	Schudy
3,922,786	A	12/1975	Lavin
3,950,851	A	4/1976	Bergersen
3,983,628	A	10/1976	Acevedo
4,014,096	A	3/1977	Deltinger
4,195,046	A	3/1980	Kesling
4,253,828	A	3/1981	Coles et al.
4,324,546	A	4/1982	Heitlinger et al.
4,324,547	A	4/1982	Arcan et al.
4,348,178	A	9/1982	Kurz
4,478,580	A	10/1984	Barrut
4,500,294	A	2/1985	Lewis
4,504,225	A	3/1985	Yoshii
4,526,540	A	7/1985	Dellinger
4,575,330	A	3/1986	Hull
4,575,805	A	3/1986	Moermann et al.
4,591,341	A	5/1986	Andrews
4,609,349	A	9/1986	Cain
4,611,288	A	9/1986	Duret et al.
4,656,860	A	4/1987	Orthuber et al.
4,663,720	A	5/1987	Duret et al.
4,664,626	A	5/1987	Kesling
4,676,747	A	6/1987	Kesling
4,742,464	A	5/1988	Duret et al.
4,763,791	A	8/1988	Halverson et al.
4,793,803	A	12/1988	Martz
4,836,778	A	6/1989	Baumrind et al.
4,837,732	A	6/1989	Brandestini et al.
4,850,864	A	7/1989	Diamond
4,850,865	A	7/1989	Napolitano
4,877,398	A	10/1989	Kesling
4,880,380	A	11/1989	Martz
4,889,238	A	12/1989	Batchelor
4,890,608	A	1/1990	Steer
4,935,635	A	6/1990	O'Harra
4,937,928	A	7/1990	van der Zel
4,941,826	A	7/1990	Loran et al.
4,964,770	A	10/1990	Steinbichler et al.
4,975,052	A	12/1990	Spencer et al.
4,983,334	A	1/1991	Adell
5,027,281	A	6/1991	Rekow et al.
5,055,039	A	10/1991	Abatte et al.
5,100,316	A	3/1992	Wildman
5,121,333	A	6/1992	Riley et al.
5,125,832	A	6/1992	Kesling
5,128,870	A	7/1992	Erdman et al.
5,130,064	A	7/1992	Smalley
5,131,843	A	7/1992	Hilgers et al.
5,131,844	A	7/1992	Marinaccio et al.
5,139,419	A	8/1992	Andreiko et al.
5,145,364	A	9/1992	Martz et al.
5,176,517	A	1/1993	Truax
5,184,306	A	2/1993	Erdman et al.
5,257,203	A	10/1993	Riley et al.
5,278,756	A	1/1994	Lemchen et al.
5,368,478	A	11/1994	Andreiko et al.
5,440,326	A	8/1995	Quinn
5,440,496	A	8/1995	Andersson et al.
RE35,169	E	3/1996	Lemchen et al.
5,518,397	A	5/1996	Andreiko et al.
5,528,735	A	6/1996	Strasnick et al.
5,562,448	A	10/1996	Mhabac
5,614,075	A	3/1997	Andre
5,621,648	A	4/1997	Crump
5,645,420	A	7/1997	Bergersen
5,655,653	A	8/1997	Chester
5,692,894	A	12/1997	Schwartz et al.
5,725,376	A	3/1998	Poirier
5,725,378	A	3/1998	Wang
5,733,126	A	3/1998	Andersson et al.
5,740,267	A	4/1998	Echerer et al.
5,742,700	A	4/1998	Yoon et al.
5,799,100	A	8/1998	Clarke et al.
5,800,174	A	9/1998	Andersson
5,823,778	A	10/1998	Schmitt et al.
5,848,115	A	12/1998	Little et al.
5,857,853	A	1/1999	Van Nifterick et al.
5,866,058	A	2/1999	Batchelder et al.
5,879,158	A	3/1999	Doyle et al.
5,880,961	A	3/1999	Crump
5,880,962	A	3/1999	Andersson et al.
5,934,288	A	8/1999	Avila et al.
5,957,686	A	9/1999	Anthony
5,964,587	A	10/1999	Sato
5,971,754	A	10/1999	Sondhi et al.
5,975,893	A	11/1999	Chishti et al.
6,015,289	A	1/2000	Andreiko et al.
6,044,309	A	3/2000	Honda
6,049,743	A	4/2000	Baba
6,062,861	A	5/2000	Andersson
6,068,482	A	5/2000	Snow
6,099,314	A	8/2000	Kopelman et al.
6,123,544	A	9/2000	Cleary
6,152,731	A	11/2000	Jordan et al.
6,183,248	B1	2/2001	Chishti et al.
6,190,165	B1	2/2001	Andreiko et al.
6,217,325	B1	4/2001	Chishti et al.
6,217,334	B1	4/2001	Hultgren
6,244,861	B1	6/2001	Andreiko et al.
6,309,215	B1	10/2001	Phan et al.
6,315,553	B1	11/2001	Sachdeva et al.
6,322,359	B1	11/2001	Jordan et al.
6,350,120	B1	2/2002	Sachdeva et al.
6,382,975	B1	5/2002	Poirier
6,398,548	B1	6/2002	Muhammad et al.
6,524,101	B1	2/2003	Phan et al.
6,554,611	B2	4/2003	Chishti et al.
6,629,840	B2	10/2003	Chishti et al.
6,705,863	B2	3/2004	Phan
2002/0006597	A1	1/2002	Andreiko et al.

FOREIGN PATENT DOCUMENTS

CA	1121955		4/1982
DE	2749802		5/1978
DE	69327661		7/2000
EP	0091876	A1	10/1983
EP	0299490	A2	1/1989
EP	0376873	A2	7/1990
EP	0490848	A2	6/1992
EP	0667753		8/1995
EP	0774933	B1	5/1997
EP	0541500	A1	6/1998
EP	0731673	B1	9/1998
ES	0463897		1/1980
FR	2652256	A1	3/1991
GB	1550777		8/1979
JP	53-058191		5/1978
JP	0428359		1/1992
JP	08-508174		9/1996
WO	WO 90/08512	A1	8/1990
WO	WO 91/04713	A1	4/1991
WO	WO 98/32394		7/1998
WO	WO 98/44865	A1	10/1998
WO	WO 98/58596	A1	12/1998

OTHER PUBLICATIONS

Deposition Transcript of Lloyd Truax, D.D.S., Case No. SACV:03–16 GLT(ANX), *Ormco Corporation* v. *Align Technology, Inc.*, (Dec. 3, 2004), total pages 51.

Deposition Transcript of Kevin L. Truax, Case No. SACV:03–16 GLT(ANX), *Ormco Corporation* v. *Align Technology, Inc.*, (Dec. 3, 2004), total pages 57.
Documents produced by Lloyd and Kevin Truax, Case No. SACV:03–16 GLT(ANX), *Ormco Corporation* v. *Align Technology, Inc.*, total pages 63.
Deposition Transcript of Michael David Rains, D.D.S., Case No. SACV:03–16 GLT(ANX), *Ormco Corporation* v. *Align Technology, Inc.*, (Nov. 15, 2004) total pp. 57.
Deposition Transcript of Michael David Rains, D.D.S., Case No. SACV:03–16 GLT(ANX), *Ormco Corporation* v *Align Technology, Inc.*, (Nov. 15, 2004) total pp. 14.
Documents produced by Guadalupe Nieto, Case No. SACV:03–16 GLT(ANX), *Ormco Corporation* v *Align Technology, Inc.*, total pages 33.
Alcaniz, et al., "An Advanced System for the Stimulation and Planning of Orthodontic Treatments," Visualization in Biomedical Computing, Eds. Hohne and Kikinis, Springer–Verlag (Sep. 1996), pp. 511–520.
Andrews, "Straight Wire, The Concept and Appliance," The Six Keys to Optimal Occlusion, Chapter 3, pp. 13–24.
Bartels, et al., An Introduction to Splines for Use in Computer Graphics and Geometric Modeling, Morgan Kaufmann Publishers (1987), 422–425.
Biggerstaff, "Computerized Diagnostic Setups and Simulations," The Angle Orthodontist, vol. 40, No. 1 (Jan. 1970), pp. 28–36.
Blu, et al., "Linear Interpolation Revitalized", IEEE Transactions on Image Processing (May 2004), vol., No. 13(5), pp. 710–719.
Cardinal Industrial Finishes, Powder Coatings Information posted at http://www.cardinalpaint.com on Aug. 25, 2000, 6 pages total.
Curry et al., "Integrated Three–Dimensional Craniofacial Mapping at the Craniofacial Research Instrumentaion Laboratory/University of the Pacific," Seminars in Orthodontics, vol. 7, No. 4 (Dec. 2001), pp. 258–265.
Defranco et al., "Three–Dimensional Large Displacement Analysis of Orthodontic Appliances," J. Biomechanics, vol. 9 (1976), pp. 793–801.
Dentrac Corporation, Dentrac document, pp. 4–13.
DENT–X posted at http://www.dent–x.com/DentSim.htm, Sep. 24, 1998, 6 pages total.
Doyle, "Digital Dentistry," Computer Graphics World (Oct. 2000), pp. 50–52, 54.
Duret et al., "CAD–CAM in Dentistry," Journal of the American Dental Association, vol. 117, No. 6 (Nov. 1988), pp. 715–720.
Fütterling et al., "Automated Finite Element Modeling of a Human Mandible with Dental Implants," WSCG '98 –Conference Program, retrieved from the Internet: <<http://wscg.zcu.cz/wscg98/Strasser_98.pdf.>>, 8 pages total.
Hikage, "Integrated Orthodontic Management System for Virtual Three–Dimensional Computer Graphic Simulation and Optical Video Image Database for Diagnosis and Treatment Planning", Journal of Japan Orthodontic Society (Feb. 1987), English translation, pp. 1–34, Japanese version, vol. 46, pp. 248–269 (56 pages total).
Hojjatie et al., "Three–Dimensional Finite Element Analysis of Glass–Ceramic Dental Crowns," J. Biomech. (1990), vol. 23, No. 11, pp. 1157–1166.
Kochanek et al., "Interpolating Splines with Local Tension, Continuity, and Bias Control", Computer Graphics (Jul. 1984), vol. 18(3), pp. 33–41.
Kunii et al., "Articulation Simulation for an Intelligent Dental Care System," Displays, vol. 15, No. 3 (1994), pp. 181–188.
Procera Research Projects, Procera Research Projects 1993—Abstract Collection (1993), pp. 3–24.
Proffit et al., Contemporary Orthodontics (Second Ed.), Chapter 15, The First Stage of Comprehension Treatment: Alignment and Leveling, Mosby Inc. (Oct. 1992), pp. 470–533.
Redmond et al., "Clinical Implications of Digital Orthodontics," Am. J. Orthodont. and Dentofacial Orthopedics, vol. 117, No. 2 (2000), pp. 240–242.
Rekow et al., "CAD/CAM for Dental Restorations—Some of the Curious Challenges," IEEE Transactions on Biomedicl Engineering (Apr. 1991), vol. 38, No. 4, pp. 314–318.
Rekow et al., "Comparison of Three Data Acquisition Techniques for 3–D Tooth Surface Mapping," Annual International Conference of the IEEE Engineering in Medicine and Biology Society (1991), vol. 13, No. 1, pp. 344–345.
Rekow, "Feasibility of an Automated System for Production of Dental Restorations," PhD Thesis, Univ. of Minnesota, Nov. 1988, 250 pages total.
Richmond et al., "The Development of the PAR Index (Peer Assessment Rating): Reliability and Validity," European Journal of Orthodontics (1992), vol. 14, pp. 125–139.
Schroeder et al., Eds. Chapters 6, 8, 9, The Visual Toolkit (1996), pp. 153–209, 309–353, and 355–427, respectively.
Sturman, "Interactive Keyframe Animation of 3–D Articulated Models," Proceedings Graphics Interface '84 (May–Jun. 1984), pp. 35–40.
Tru–Tain Orthodontic & Dental Supplies, Product Brochure, Rochester, Minnesota 55902, 16 pages total.
Van Der Zel, "Ceramic–Fused–to–Metal Restorations With a New CAD/CAM System," Quintessence International, vol. 24:11, (Nov. 1993), pp. 769–778.
Alexander et al., "The DigiGraph Work Station Part 2, Clinical Management," JCO (Jul. 1990), pp. 402–407.
Altschuler et al., "Measuring Surfaces Space–Coded by a Laser–Projected Dot Matrix," SPIE: Imaging Applications for Automated Industrial Inspection and Assembly, vol. 182 (1979), p. 187–191.
Altschuler et al., "Analysis of 3–D Data for Comparative 3–D Serial Growth Pattern Studies of Oral–Facial Structures," IADR Abstracts #510, Program and Abstracts of Papers, 57th General Session, IADR Annual Session, Mar. 29, 1979–Apr. 1, 1979, New Orleans Marriot, Journal of Dental Research, vol. 58, Jan. 1979, Special Issue A, p. 221.
Altschuler et al., "Laser Electro–Optic System for Rapid Three–Dimensional (3D) Topographic Mapping of Surfaces," Optical Engineering, vol. 20(8) (1981), pp. 953–961.
Altschuler, "3D Mapping of Maxilio–Facial Prosthesis," AADR Abstracts #607 (1980), 1 page total.
American Association for Dental Research, Summary of Activities, Mar. 20–23, 1980, Los Angeles, CA, p. 195.
Andersson et al., "Clinical Results with Titanium Crowns Fabricated with Machine Duplication and Spark Erosion," Acta Odontological Scandinavia, vol. 47 (1989), pp. 279–286.
Baumrind et al., "A Stereophotogrammetric System for the Detection of Prosthesis Loosening in Total Hip Arthroplasty," NATO Symposium on Applications of Human Biostereometrics (Jul. 9–13, 1978), SPIE, vol. 168, pp. 112–123.

Baumrind et al., "Mapping the Skull in 3–D," Reprinted from The Journal, California Dental Association, vol. 48, No. 2 (1972 Fall Issue), 11 pages total.

Baumrind, "A System for Craniofacial Mapping Through the Integration of Data from Stereo X–Ray Films and Stereo Photographs," An invited paper submitted to the 1975 American Society of Photogram. Symposium on Close–Range Photogram Systems, University of Il. (Aug. 26–30, 1975), pp. 142–166.

Baumrind, "Integrated Three–Dimensional Craniofacial Mapping: Background, Principles, and Perspectives," Seminars in Orthodontics, vol. 7, No. 4 (Dec. 2001), pp. 223–232.

Begole et al., "A Computer System for the Analysis of Dental Casts," The Angle Orthodontist, vol. 51, No. 3 (Jul. 1981), pp. 252–258.

Bernard et al., "Computerized Diagnosis in Orthodontics for Epidermiological Studies: A Progress Report," Abstracts of Papers #449, Journal of Dental Research; vol. 67, Special Issue Mar. 9–13, 1988, J3. p. 169.

Bhatia et al., "A Computer–Aided Design for Orthognathic Surgery," British Journal of Oral and Maxillofacial Surgery, vol. 22 (1984), pp. 237–253.

Biggerstaff et al., "Computerized Analysis of Occlusion in the Postcanine Dentition, American Journal of Orthodontics," vol. 61, No. 3 (Mar. 1972), pp. 245–254.

Boyd et al., "Three Dimensional Diagnosis and Orthodontic Treatment of Complex Malocclusions With the Invisalign Appliance," Seminars in Orthodontics, vol. 7, No. 4 (Dec. 2001), pp. 274–293.

Brandestini et al., "Computer Machined Ceramic Inlays: In Vitro Marginal Adaptation," Journal of Dental Research, vol. 64/Special Issue/Abstracts, IADR/AADR Abstracts #305 (1985), p. 208.

Brook et al., "An Image Analysis System for the Determination of Tooth Dimensions from Study Casts: Comparison with Manual Measurements of Mesio–distal Diameter," J Dent Res., vol. 65, No. 3 (Mar. 1986), pp. 428–431.

Burstone (Interview), "Dr. Charles J. Burstone on The Uses of the Computer in Orthodontic Practive (Parts 1 and 2)," Journal of Clinical Orthodontics,(Part 1) vol. 13, No. 7, pp. 442–453, Jul. 1979; (Part 2) vol. 13, No. 8 pp. 539–551, Aug. 1979.

Burstone et al., "Precision adjustment of the transpaiatal lingual arch: Computer arch from predetermination," Am. Journal of Orthodontics, vol. 79, No. 2 (Feb. 1981), pp. 115–133.

Chaconas et al., "The DigiGraph Work Station, Part 1, Basic Concepts," JCO (Jun. 1990), pp. 360–367.

Chafetz et al., "Subsidence of the Femoral Prosthesis, A Stereophotogrammetric Evaluation," Clinical Orthopaedics and Related Research, No. 201 (Dec. 1985), pp. 60–67.

Crawford, "CAD/CAM in the Dental Office: Does it Work?" Canadian Dental Journal, vol. 57, No. 2 (Feb. 1991), pp. 121–123.

Crawford, "Computers in Dentistry: Part 1: CAD/CAM: The Computer Moves Chairside," "Part 2: F. Duret—A Man With A Vision," "Part 3: The Computer Gives New Vision—Literally," "Part 4: Bytes 'N Bites" The Computer Moves From The Front Desk To The Operatory, Canadian Dental Journal, vol. 54(9), (1988), pp. 661–666.

Crooks, "CAD/CAM Comes to USC," USC Dentistry (Spring 1990), pp. 14–17.

Cutting et al., "Three–Dimensional Computer–Assisted Design of Craniofacial Surgical Procedures: Optimization and Interaction with Cephalometric and CT–Based Models," Plastic and Reconstructive Surgery, vol. 77, No. 6 (Jun. 1988), pp. 877–885.

DCS Dental AG, "The CAD/CAM 'DCS Titan System' for Production of Crowns/Bridges" DSC Production AG (Jan. 1992), pp. 1–7.

Dental Institute University of Zurich Switzerland, Program for International Symposium on Computer Restorations: State of the Art of the CEREC–Method, May 1991, 2 pages total.

Duret et al., "CAD–CAM in Dentistry," Journal of the American Dental Association, vol. 117 (Nov. 1988), pp. 715–720.

Duret et al., "CAD/CAM Imaging in Dentistry," Current Opinion in Dentistry, vol. 1 (1991), pp. 150–154.

Duret, "The Dental CAD/CAM, General Description of the Project," Hennson International Product Brochure (Jan. 1986), 16 pages total.

Duret, "Vers Une Prosthese Informatisee," (English translation also attached), Tonus, vol. 73, (Nov. 15, 1985), pp. 55–57.

Economides, "The Microcomputer in the Orthodontic Office," JCO (Nov. 1979), pp. 767–772.

Faber et al., "Computerized interactive orthodontic treatment planning," Am. J. Orthod., vol. 73, No. 1 (Jan. 1978), pp. 36–46.

Felton et al., "A Computerized Analysis of the Shape and Stability of Mandibular Arch Form," Am. Journal of Orthodontics and Dentofacial Orthopedics, vol. 92, No. 6 (Dec. 1987), pp. 478–483.

Friede et al., "Accuracy of Cephalometric Prediction in Orthognathic Surgery," Abstract of Papers, Journal of Dental Research, vol. 70 (1987), pp. 754–760.

Gim–Alldent Deutschland, "Das DUX System: Die Technik," 2 pages total.

Grayson, "New Methods for Three Dimensional Analysis of Craniofacial Deformity," Symposium: Computerized Facial Imaging in Oral and Maxillofacial Surgery, Presented on Sep. 13, 1990, AAOMS 72nd Annual Meeting and Scientific Sessions, Sep. 13, 1990, New Orleans, Journal of Oral and Maxillofacial Surgery, vol. 48, No. 8, Supp. 1, Aug. 1990, pp. 5–6.

Guess et al., "Computer Treatment Estimates in Orthodontics and Orthognathic Surgery," JCO (Apr. 1989), pp. 262–268.

Heaven et al., "Computer–based image Analysis of Artificial Root Surface Caries" "Automated Identification of Landmarks in Cephalometric Radiographs," Abstracts of Papers #2094, Journal of Dental Research, vol. 67 (Mar. 9–13), 1 page total.

Hoffmann et al., "Role of Cephalometry for Planning of Jaw Orthopedics and Jaw Surgery Procedures," (Article Summary in English, article in German), Informationen (Mar. 1991), pp. 375–396.

Huckins, "CAD–CAM Generated Mandibular Model Prototype from MRI Data," AAOMS 1999, p. 96.

JCO Interviews, "Craig Andreiko, DDS, MS on the Elan and Orthos Systems," JCO (Aug. 1994), pp. 459–466.

JCO Interviews, "Dr. Homer W. Phillips on Computers in Orthodontic Practice, Part 2," JCO (Dec. 1983), pp. 819–831.

Jerrold, "The Problem, Electronic Data Transmission and the Law," AJO–DO (Apr. 1988), pp. 476–479.
Jones et al., "An Assessment of the Fit of a Parabolic Curve to Pre– and Post–Treatment Dental Arches," British Journal of Orthodontics, vol. 16 (1989), pp. 85–93.
Kanazawa et al., "Three–Dimensional Measurements of the Occlusal Surfaces of Upper Molars in a Dutch Popoulation," J Dent Res, vol. 63, No. 11 (Nov. 1984), pp. 1298–1301.
Laurendeau et al., "A Computer–Vision Technique for the Acquisition and Processing of 3–D Profiles of Dental Imprints: An Application in Orthodontics," IEEE Transactions on Medical Imaging, vol. 10, No. 3 (Sep. 1991), pp. 453–461.
Leinfelder et al., "A New Method for Generating Ceramic Restorations: A CAD–CAM System," Journal Of The American Dental Assoc., vol. 118, No. 6 (Jun. 1989), pp. 703–707.
Manetti et al., "Computer–aided Cefalometry and New Mechanics In Orthodontics," (Article Summary in English, article in German), Fortsch . Kieferorthop. 44, 370–376 (Nr. 5), 1983.
McCann, Inside the ADA, Journal Of The American Dental Assoc., vol. 118 (Mar. 1989) pp. 286–294.
McNamara et al., "Invisible Retainers," J. Clinical Orthodontics (Aug. 1985), pp. 570–578.
McNamara et al., Chapter 19: Invisible Retainers. Orthodontic and Orthopedic Treatment in the Mixed Dentition, Needham Press, Jan. 1993, pp. 347–353.
Moermann et al., "Computer Machined Adhesive Porcelain Inlays: Margin Adaptation after Fatigue Stress," IADR Abstract #339, Journal of Dental Research, vol., No. 66(a) (1987), p. 763.
Mormann et al., "Marginal Adaptation Von Adhesive Porzellaninlays in Vitro," *Schwizerische Monatsshrift fur Zahnmedizin*, vol. 95 (1985), pp. 1118–1129.
Nash, "Cerec CAD/CAM Inlays: Aesthetics and Durability in a Single Appointment," Dentistry Today (Oct. 1990), pp. 20, 22–23, 54.
Pinkham, "Foolish' Concept Propels Technology," Dentist, Jan./Feb. 1989, 3 pages total.
Pinkham, "Inventor's CAD/CAM May Transform Dentist," Dentistry (Sep. 1990), 3 pages total.
Rekow, "A Review of the Developments In Dental CAD/CAM Systems," (contains references to Japanese efforts and content of the papers of particular interest to the clinician are indicated with a one–line summary of their content in the bibliography), Dental Clinics: Prosthodontics and Endodontics, pp. 25–33, 1992.
Rekow, "CAD/CAM in Dentistry: A Historical Perspective and View of the Future," Journal, vol. 58, No. 4 (Apr. 1992), pp. 283, 287–288.
Rekow, "Computer–Aided Design and Manufacturing in Dentistry: A Review of the State of the Art," The Journal of Prosthetic Dentistry, vol. 58, No. 4 (Oct. 1987), pp. 512–516.
Rekow, "Dental CAD–CAM Systems: What is the State of the Art?" Journal of the American Dental Assoc., vol. 122 (1991), pp. 43–48.
Richmond et al., Research Reports, "The Development of a 3D Cast Analysis System," British Journal of Orthodontics, vol. 13, No. 1, (Jan. 1986), pp. 53–54.
Richmond, "Recording the Dental Cast in Three Dimensions," Am. J. Orthod. Dentofac. Orthop., vol. 92, No. 3 (Sep. 1987), pp. 199–206.
Rudge, "Dental Arch Analysis: Arch Form, A Review of the Literature," European Journal of Orthodonics, vol. 3, No. 4 (1981), pp. 279–284.
Sakuda et al., "Integrated Information–Processing System In Clinical Orthodontics: An Approach With Use of a Computer Network System," Am. J. Orthod. Dentofac. Orthop., vol. 101, No. 3 (Mar. 1992), pp. 210–220.
Schellhas et al., "Three–Dimensional Computed Tomography in Maxillofacial Surgical Planning," Arch Otolarmgol Head Neck Surg. vol. 114 (Apr. 1988), pp. 438–442.
Siemens, "CEREC—Computer–Reconstruction, High Tech in der Zahnmedizin," 14 page total.
Sirona Dental Systems GmbH, CEREC 3D, Manuel Utilisateur, Version 2.0X (in French), 2003, 114 pages total.
Stoll et al., "Computer–aided Technologies in Dentistry," (Article Summary in English, article in German), Disch Zahnärzil Z 45, 314–322, 1990.
U.S. Department of Commerce, National Technical Information Service, "Automated Crown Replication Using Solid Photography SM," Solid Photography Inc. Melville NY, Oct. 1977, 19 pages total.
U.S. Department of Commerce, National Technical Information Service, "Holodontography: An Introduction to Dental Laser Holography," School of Aerospace Medicine Brooks AFB Tex, Mar. 1973, 37 pages total.
U.S. Appl. No. 60/050,342, filed on Jun. 20, 1997, 27 pages total.
Van Der Linden et al., "Three–Dimensional Analysis of Dental Casts by Means of the Optocom," J Dent Res, Jul.–Aug. 1972, p. 1100.
Van Der Linden, "A New Method of Determine Tooth Positions and Dental Arch Dimensions," Jul.–Aug. 1972, p. 1104.
Varady et al., "Reverse Engineering of Geometric Models—An Introduction, Computer–Aided Design," 29 (4):255–268, 1997, (May 1996), pp. 1–28.
Williams, "Dentistry and CAD/CAM: Another French Revolution," Journal of Dental Practice Admin. (Jan./Mar. 1987), pp. 2–5.
Williams, "The Switzerland and Minnesota Developments in CAD/CAM," Journal of Dental Practice Admin. (Apr./Jun. 1987), pp. 50–55.
Wishan, "New Advances in Personal Computer Applications for Cephalometric Analysis, Growth Prediction, Surgical Treatment Planning and Imaging Processing," Symposium: Computerized Facial Imaging in Oral and Maxillofacial Surgery, Presented on Sep. 13, 1990, AAOMS 72nd Annual Meeting and Scientific Sessions, Sep. 13, 1990, New Orleans, Journal of Oral and Maxillofacial Surgery, vol. 48, No. 8, Supp. 1, Aug. 1990, p. 5.
Yamamoto et al., "Optical Measurement of Dental Cast Profile and Application to Analysis of Three–Dimensional Tooth Movement in Orthodontics," Frontiers in Med. and Biol. Eng'g, vol.1 , No. 2 (1988), pp. 119–130.
Yamamoto et al., "Three–Dimensional Measurement of Dental Cast Profiles and Its Applications to Orthodontics," Proceedings of the Twelfth Annual Int'l Conf. of IEEE Engineerng in Medicine and Biology Society, vol. 12, No. 5 (1990), pp. 2051–2053.
Nahoum, H. I. (Nov. 1964). "The vacuum formed dental contour appliance," *The New York State Dental Journal* 30(9): 385–390.

EX PARTE REEXAMINATION CERTIFICATE ISSUED UNDER 35 U.S.C. 307

THE PATENT IS HEREBY AMENDED AS INDICATED BELOW.

Matter enclosed in heavy brackets [ ] appeared in the patent, but has been deleted and is no longer a part of the patent; matter printed in italics indicates additions made to the patent.

AS A RESULT OF REEXAMINATION, IT HAS BEEN DETERMINED THAT:

The patentability of claims **4**–**8** is confirmed.

Claims **10** and **11** are cancelled.

Claims **1**, **3**, **9** and **12**–**16** are determined to be patentable as amended.

Claim **2**, dependent on an amended claim, is determined to be patentable.

New claims **17**–**44** are added and determined to be patentable.

1. A method for producing a dental positioning appliance which is removably attachable to at least one dental feature to effect or enhance dental positioning, said method comprising:

providing a mold of dental features *wherein the mold has at least one attachment device mounted or formed on a surface of the mold, and wherein each attachment device or an approximate copy thereof is designed and intended to be attached to a patient's tooth while the patient is wearing an appliance made from the mold;*

providing additional structures on the mold of dental features, wherein the structures provide a guide to demarcate a portion of the appliance in a desired location, and wherein none of the additional structures is designed or intended to be attached to a patient's tooth while the patient is wearing an appliance made from the mold;

forming the dental appliance over the mold with the attachment device(*s*) *and the additional structures*; [and]

removing the dental appliance from the mold, wherein the appliance has a receptacle corresponding to [the] *each* attachment device [and], tooth receiving cavities corresponding to the dental features of the mold, *and demarcations corresponding to the additional structures of the mold*;

[providing additional structures in the mold of dental features, wherein the structures provide a guide to demarcate a portion of the appliance in a desired location;] and

altering a portion of the appliance demarcated by the [structure] *additional structures by removing a portion of the appliance*.

3. A method as in claim **1**, wherein the altering step comprises cutting out the portion of the appliance demarcated by the structure, whereby a window is created to expose [the] *an* underlying dental feature.

9. A method for moving teeth, *including applying an intrusive force to at least one tooth*, said method comprising:

securing [an] *a first* attachment device on a dental feature *of a first tooth;*

securing a second attachment device on a dental feature of a second tooth;

removably positioning a first dental positioning appliance over the dental [feature] *features,* wherein the appliance comprises an elastic polymeric shell having [a cavity] *cavities* which [receives] *receive* the dental [feature] *features* and [a receptacle] *receptacles* which [receives] *receive* the attachment [device] *devices*;

removing the first dental positioning appliance from the dental features; and

removably positioning at least a second dental positioning appliance over the dental[feature] *features*, wherein the second dental positioning appliance comprises an elastomeric shell having [a cavity] *cavities* which [receives] *receive* the dental [feature] *features* and [a receptacle] *receptacles* which [receives] *receive* the attachment [device] *devices*, wherein at least one of the [receptacle] *receptacles* and the [cavity] *cavities* has a different configuration than that of the first dental positioning appliance*, and*

wherein at least one of the first and second dental positioning appliances is anchored with the first and second attachment devices and applies an intrusive repositioning force to a dental feature of a third tooth.

12. A method as in claim **9**, further comprising removably positioning at least a third dental positioning appliance over the dental [feature] *features,* wherein the third dental positioning appliance comprises an elastomeric shell having [a cavity] *cavities* which [receives] *receive* the dental [feature] *features* and [a receptacle] *receptacles* which [receives] *receive* the attachment [device] *devices*, wherein at least one of the [receptacle] *receptacles* and the [cavity] *cavities* has a different configuration than that of the first and second dental positioning appliances.

13. A method as in claim **12**, wherein at least five dental positioning appliances having receptacles are successively placed over the dental [feature] *features*.

14. A method as in claim **12**, wherein at least ten dental positioning appliances having receptacles are successively placed over the dental [feature] *features*.

15. A method as in claim **9**, wherein the dental positioning appliances apply an extrusive force to [the] *at least one* attachment device *secured to a fourth tooth*.

16. A method as in claim **9**, wherein the dental positioning appliances *further* apply a rotational force to the [attachment device] *dental feature of the third tooth*.

17. A method as in claim 9, further comprising intruding at least the third tooth, using at least one of the first and second appliances.

18. A method as in claim 9, wherein a shape of at least one of the first and second appliances comprises an inset profile at the location at which intrusive force is to be applied to the third tooth.

19. A method as in claim 18, wherein the shape further comprises at least one receptacle for receiving an attachment device attached to the third tooth.

20. A method as in claim 18, wherein the inset profile is configured to exert an intrusive force on a bite surface of the third tooth.

21. A method as in claim 9, wherein a cavity corresponding to the third tooth in at least one of the first and second appliances is displaced in an intrusive direction from its position in a previous appliance.

22. A method as in claim 9, wherein a cavity corresponding to the third tooth in at least one of the first and second

appliances has a surface displaced in an intrusive direction to apply an intrusive force to the third tooth.

23. A method as in claim 9, further comprising securing at least one additional attachment device to dental feature(s) of at least one of the first and second teeth.

24. A method as in claim 9, wherein the first tooth and second teeth are immediately adjacent the third tooth.

25. A method as in claim 9, wherein the third tooth is immediately adjacent at least a fourth tooth, wherein the third and fourth teeth are located between the first and second teeth, and wherein intrusive force is applied to the third and fourth teeth.

26. A method as in claim 25, wherein the fourth tooth is immediately adjacent at least a fifth tooth, wherein the third, fourth and fifth teeth are located between the first and second teeth, and wherein intrusive force is applied to the third, fourth and fifth teeth.

27. A method for moving teeth, said method comprising:

securing a first attachment device on a first dental feature;

removably positioning a first dental positioning appliance over the first dental feature wherein the appliance comprises an elastic polymeric shell having a first cavity which receives the first dental feature and a first receptacle which receives the first attachment device;

removing the first dental positioning appliance;

securing at least a second attachment device on a second dental feature after the first appliance is removed; and

removably positioning at least a second dental positioning appliance over the first and second dental features after the second attachment device is secured, wherein the second dental positioning appliance comprises an elastomeric shell having first and second cavities which receive the first and second dental features and a second receptacle which receives the second attachment device, and wherein at least one of the receptacles and the cavities of the second dental positioning appliance has a different configuration than that of the first dental positioning appliance.

28. A method as in claim 27, wherein the second attachment device is positioned on the second dental feature using a template.

29. A method as in claim 27, further comprising removing the first attachment device before removably positioning the second dental positioning appliance.

30. A method as in claim 27, further comprising replacing the first attachment device before removably positioning the second dental positioning appliance.

31. A method as in claim 27, further comprising moving the first attachment device to a new location on the first dental feature before removably positioning the second dental positioning appliance.

32. A method as in claim 27, further comprising:

removing the second appliance;

securing at least a third attachment device on a third dental feature after the second appliance is removed; and

removably positioning at least a third dental positioning appliance over at least the third dental feature after the third attachment device is secured, wherein the third dental positioning appliance comprises an elastomeric shell having cavities which receive the first, second and third dental features and at least one receptacle which receives at least the third attachment device.

33. A method as in claim 32, further comprising removing at least one of the first and second attachment devices before positioning the third dental positioning appliance.

34. A method as in claim 32, further comprising replacing at least one of the first and second attachment devices before positioning the third dental positioning appliance.

35. A method as in claim 32, further comprising moving at least one of the first and second attachment devices to a new location on the first or second dental feature before positioning the third dental positioning appliance.

36. A method for moving teeth, including applying an intrusive force to at least one tooth, said method comprising:

securing an attachment device on a dental feature of at least a first tooth;

removably positioning a first dental positioning appliance over the dental feature wherein the appliance comprises an elastic polymeric shell having a cavity which receives the dental feature and a receptacle which receives the attachment device; and

removably positioning at least a second dental positioning appliance over the dental feature, wherein the second dental positioning appliance comprises an elastomeric shell having a cavity which receives the dental feature and a receptacle which receives the attachment device, wherein at least one of the receptacle and the cavity has a different configuration than that of the first dental positioning appliance,

wherein at least one of the first and the second dental positioning appliances is anchored with the attachment device and applies an intrusive repositioning force to a dental feature of a second tooth.

37. A method as in claim 36, further comprising intruding the second tooth, using at least one of the first and second appliances.

38. A method as in claim 36, wherein intruding force is applied to the second tooth via a cavity shape of the appliance, and wherein no force is applied to any attachment device on the second tooth.

39. A method as in claim 36, wherein intruding force is applied to the second tooth via a cavity shape of the appliance and an attachment device on the second tooth.

40. A method as in claim 36, wherein the first tooth is immediately adjacent the second tooth.

41. A method as in claim 36, further comprising securing a second attachment device on a dental feature of a third tooth, wherein the first and third teeth are on opposite sides of the second tooth.

42. A method as in claim 41, further comprising securing at least two attachment devices on dental features of each of the first and third teeth.

43. A method as in claim 36, wherein a cavity of at least one of the appliances corresponding to the second tooth is formed to create an intrusive force directly on the second tooth.

44. A method as in claim 36, wherein two or more teeth are to be intruded.

* * * * *