US006702575B2

(12) **United States Patent**
Hilliard

(10) **Patent No.: US 6,702,575 B2**
(45) **Date of Patent: Mar. 9, 2004**

(54) **ORTHODONTIC ALIGNER AUXILIARY SYSTEM**

(76) Inventor: **Jack Keith Hilliard**, 330 E. Highlands Dr., Lakeland, FL (US) 33813

(*) Notice: Subject to any disclaimer, the term of this patent is extended or adjusted under 35 U.S.C. 154(b) by 22 days.

(21) Appl. No.: **10/115,413**

(22) Filed: **Apr. 3, 2002**

(65) **Prior Publication Data**

US 2003/0190575 A1 Oct. 9, 2003

(51) **Int. Cl.**[7] **A61C 3/00**
(52) **U.S. Cl.** **433/6**; 433/18
(58) **Field of Search** 433/2, 6, 18, 24

(56) **References Cited**

U.S. PATENT DOCUMENTS

1,463,968	A		8/1923	Petry
2,257,709	A		9/1941	Anderson
2,467,432	A		4/1949	Kesling
2,479,780	A	*	8/1949	Remensnyder
3,178,820	A	*	4/1965	Kesling
3,407,500	A	*	10/1968	Kesling
3,510,946	A		5/1970	Kesling
3,574,941	A	*	4/1971	Ritter
3,724,075	A	*	4/1973	Kesling
3,950,851	A		4/1976	Bergersen
3,991,471	A		11/1976	Hoops
4,055,895	A	*	11/1977	Huge
4,505,672	A	*	3/1985	Kurz 433/6
4,591,341	A		5/1986	Andrews
4,755,139	A		7/1988	Abbatte et al.
4,793,803	A	*	12/1988	Martz 433/6
5,242,304	A		9/1993	Truax et al.
5,536,168	A		7/1996	Bourke
5,683,244	A		11/1997	Truax
5,692,894	A		12/1997	Schwartz et al.
6,217,325	B1		4/2001	Chishti et al.
6,293,790	B1		9/2001	Hilliard
6,299,440	B1		10/2001	Phan et al.
6,309,215	B1		10/2001	Phan et al.

FOREIGN PATENT DOCUMENTS

WO	WO 99/42055	*	8/1999

* cited by examiner

Primary Examiner—Ralph A. Lewis
(74) *Attorney, Agent, or Firm*—Dorr, Carson, Sloan, Birney & Kramer, P.C.

(57) **ABSTRACT**

A method and apparatus for orthodontic treatment employs a removable orthodontic aligner having a polymeric shell with a plurality of cavities shaped to receive teeth. A number of openings are formed that extend through the shell of the orthodontic aligner into a cavity. An orthodontic aligner auxiliary can then be secured to the opening in the shell of the orthodontic aligner to exert a therapeutic force on a tooth.

30 Claims, 7 Drawing Sheets

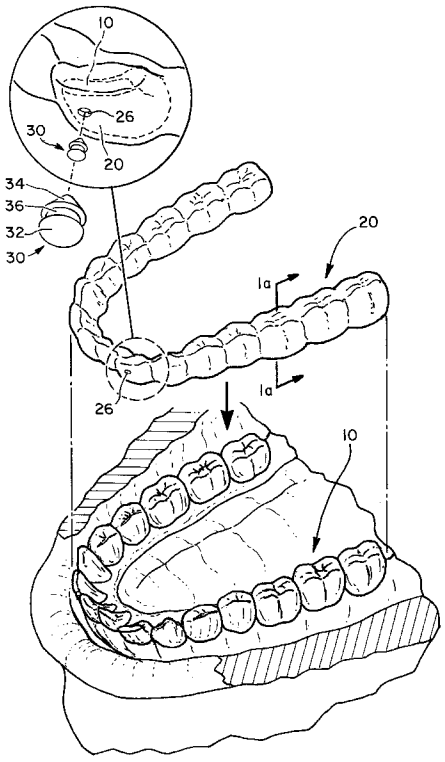

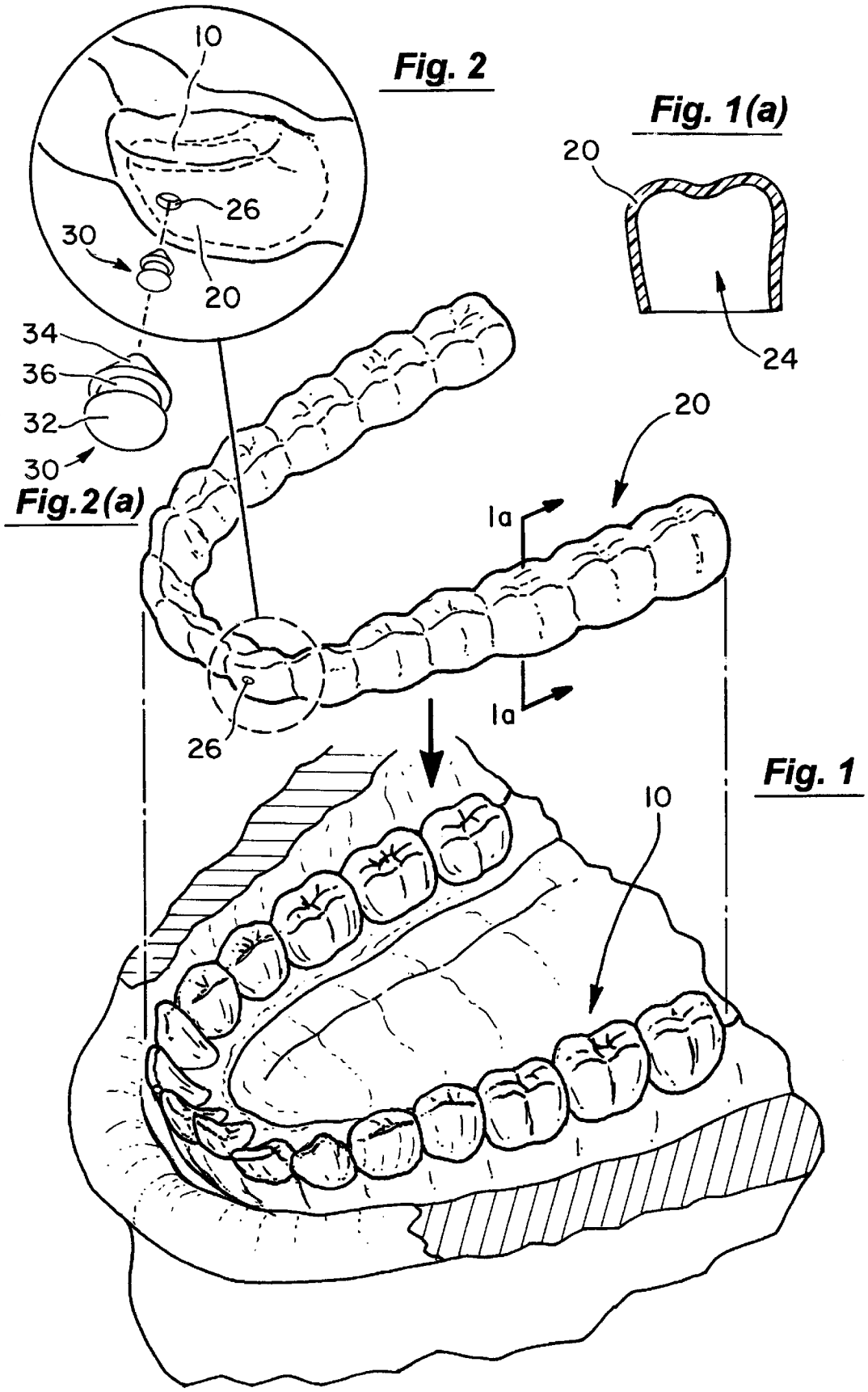
10
Fig. 2
Fig. 1(a)
20
26
30
20
24
34
36
32
30
Fig.2(a)
20
1a
1a
26
Fig. 1
10

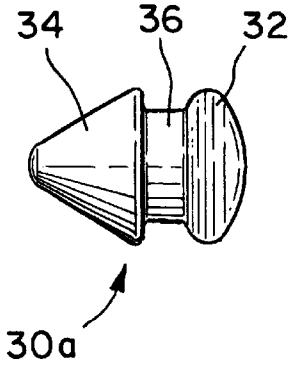

Fig. 3(a)

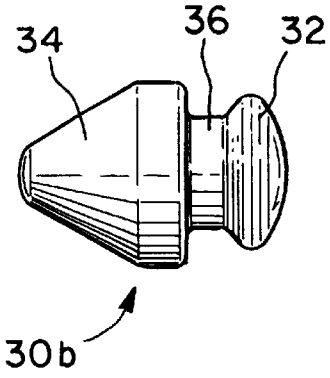

Fig. 3(b)

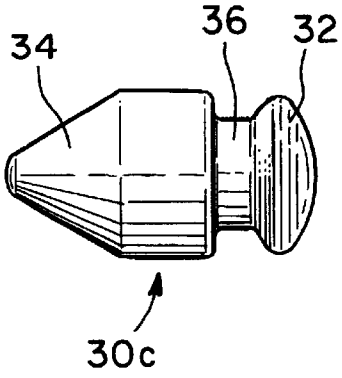

Fig. 3(c)

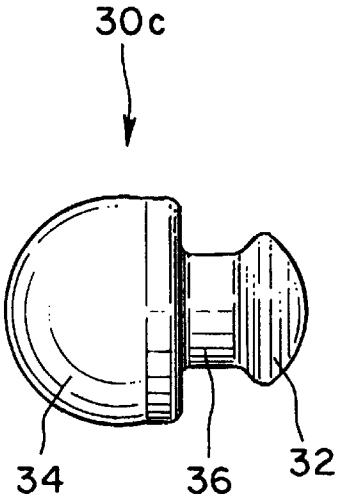

Fig. 4(c)

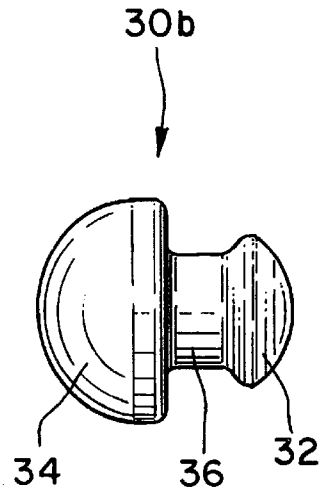

Fig. 4(b)

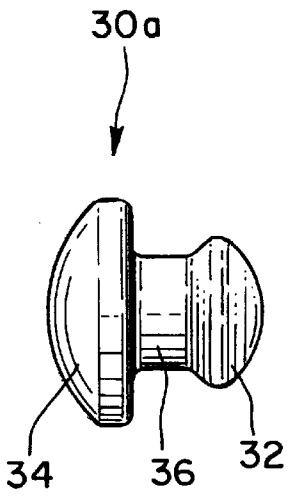

Fig. 4(a)

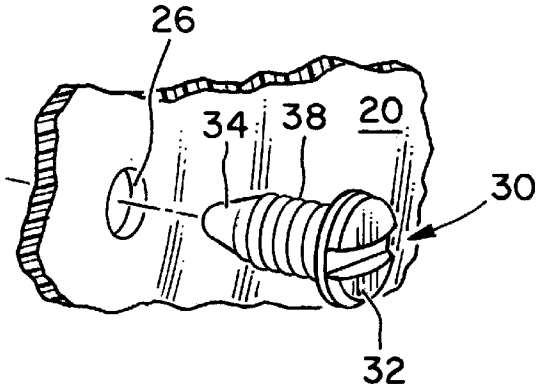

Fig. 5

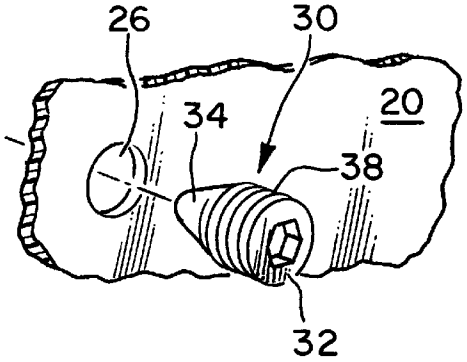

Fig. 6

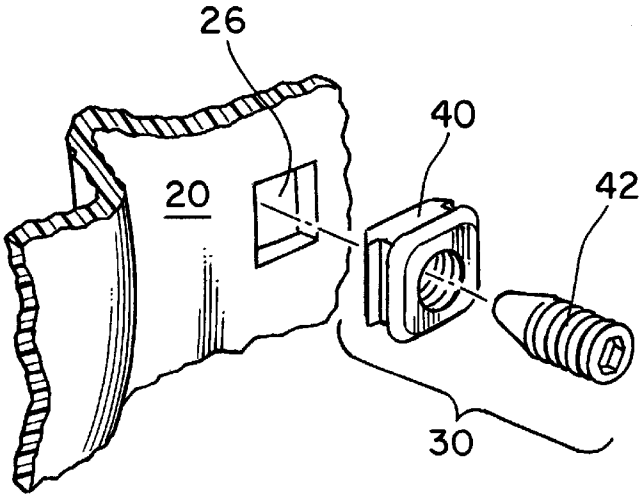

Fig. 7

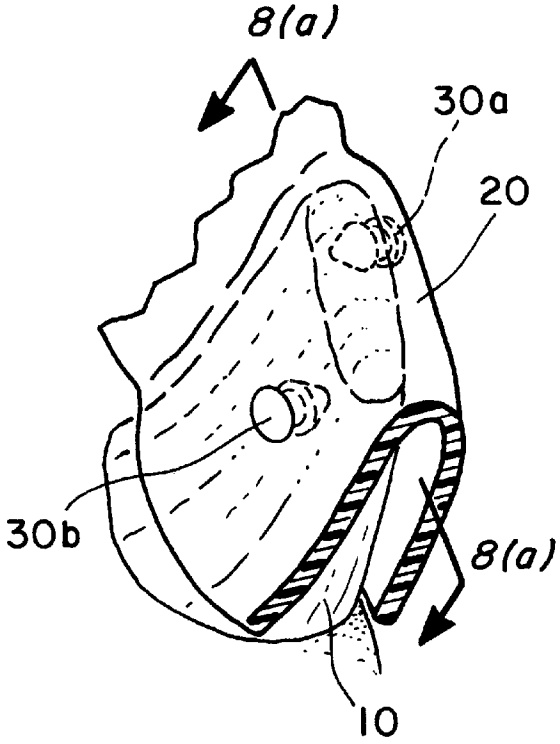

Fig. 8

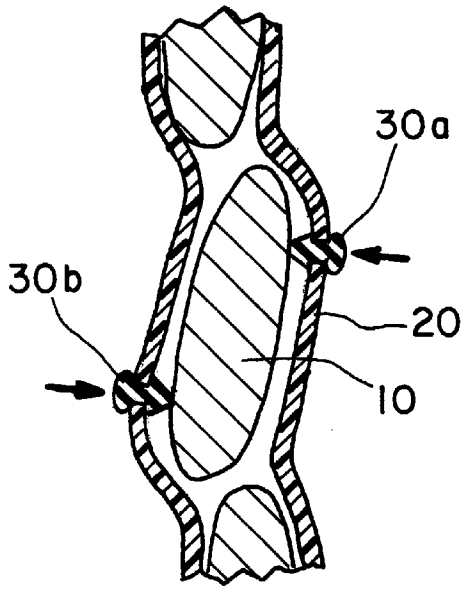

Fig. 8(a)

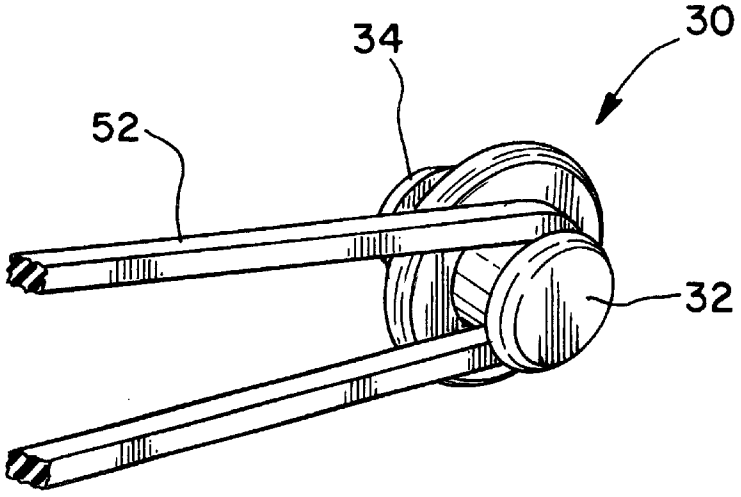

Fig. 9

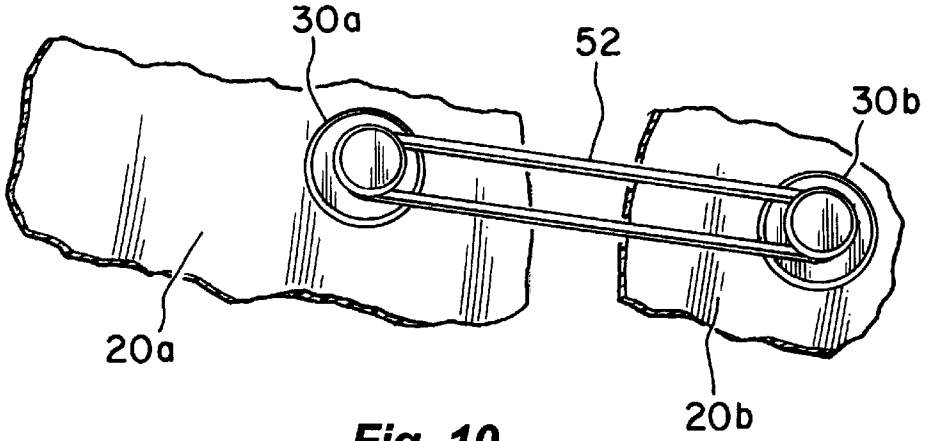

Fig. 10

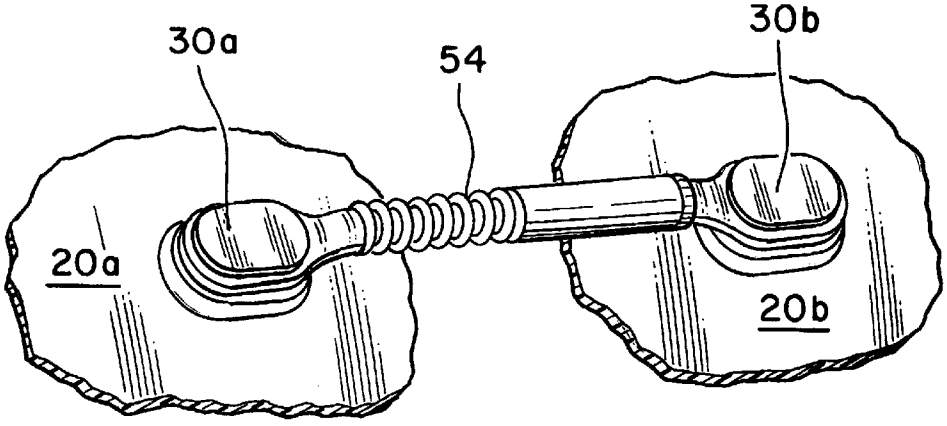

Fig. 11

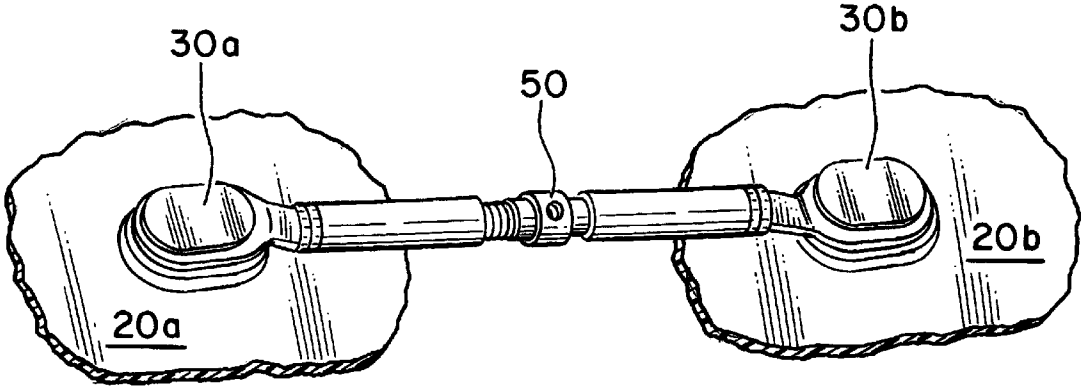

Fig. 12

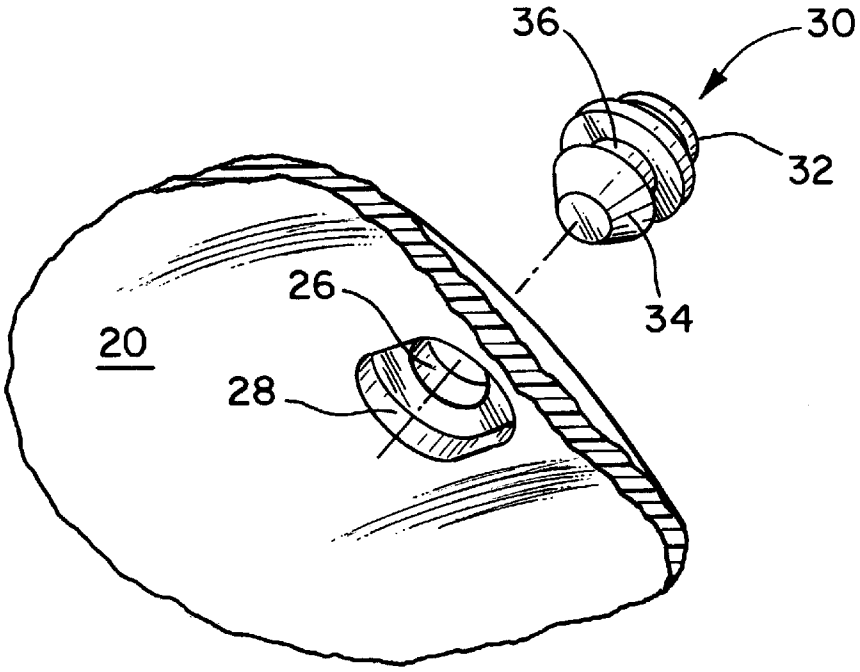

Fig. 13(a)

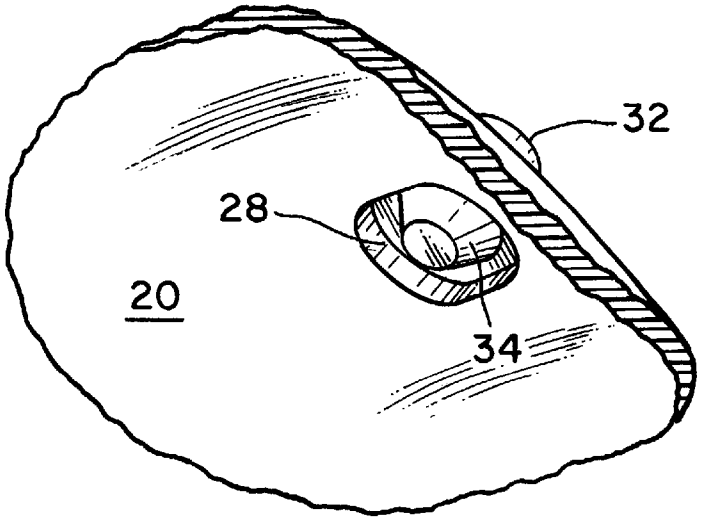

Fig. 13(b)

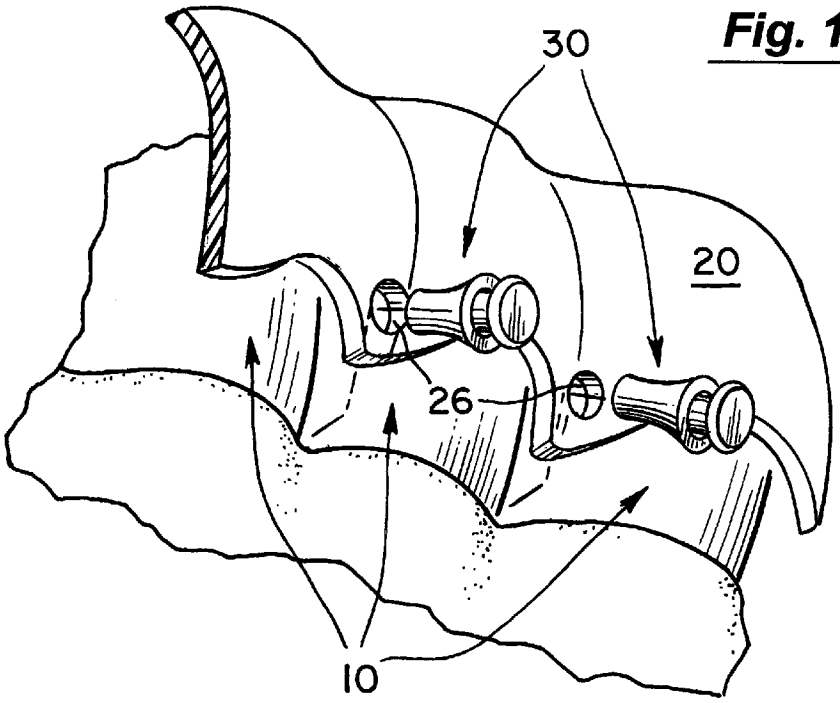

Fig. 14

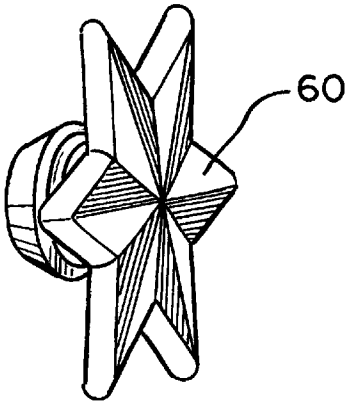

Fig. 15(a)

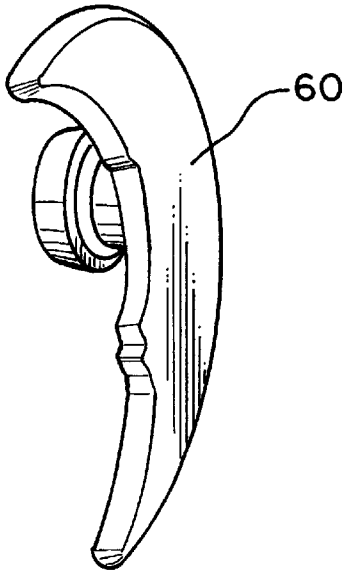

Fig. 15(b)

ORTHODONTIC ALIGNER AUXILIARY SYSTEM

BACKGROUND OF THE INVENTION

1. Field of the Invention

The present invention relates generally to the field of orthodontic appliances. More specifically, the present invention discloses a method and apparatus of orthodontic treatment in which any of a variety of orthodontic aligner auxiliaries can be used in conjunction with a removable aligner for orthodontic treatment.

2. Statement of the Problem

In the field of orthodontics, treatment is currently accomplished through the use of a wide range of hardware options available to the practitioner. Taken to a simplest form, these options can be categorized into two groups. The first group is conventional braces, which are based on tooth-mounted mechanical systems intended to reposition a patient's teeth. The other group includes various types of orthopedic appliances that act to elicit a more physiological or skeletal response. The orthopedic approach is directed not only to repositioning of an orthodontic patient's teeth, but also to attaining a corrected and stable balance between the jaws, the facial musculature and the bony structures of the face. In practice, orthodontic correction is typically accomplished through a combination of these two approaches where first a patient's skeletal relationships will be brought into a more harmonious and corrected balance, and once corrected in that manner, the teeth will then be moved into desired final aesthetic positions and desired relationships using conventional braces.

Many auxiliary treatment systems have been developed that generally serve to augment or support the two basic approaches described above. Such auxiliary systems include devices known as retainers, face bows, holding arches, reverse-pull headgear, transpalatal arches, rapid palatal expanders, lingual arch developers, mandibular advancers, lip bumpers and the like. In most cases, such auxiliary treatment devices serve progressively during specific subphases of treatment and serve to expedite one treatment objective that must be accomplished before another can begin.

As the science of orthodontic treatment and the related armamentarium has matured, some particularly skilled orthodontists have become so adept at using such auxiliary support systems that their use has been expanded to become a central means of a complete treatment methodology. Many such auxiliary support systems have been commercialized and thus provide the orthodontic profession with many treatment tools, methods and options usefully bolstering treatment methods using conventional "braces" and the orthopedic approaches.

One such orthodontic auxiliary support system to which the present invention is directed is broadly known in orthodontics as the orthodontic tooth positioner. Orthodontic tooth positioners can be characterized as being generally U-shaped, conforming to the shape of the dental arches and formed of a soft, flexible or resilient material. A trough is formed along the generally U-shaped configuration of a tooth positioner, which consists of multiple depressions, each depression being negatively formed to intimately contact and positively accept a corresponding tooth. When placed in the patient's mouth, a tooth positioner typically spans and intimately accepts all of the teeth of an upper or lower arch of a patient and in doing so typically covers the

entire crown of the teeth. Tooth positioners usually do not extend beyond the gingival margin of the teeth and therefore do not typically contact the adjacent soft tissue or the gums.

Generally speaking, positioners used in the past tended to be integral, i.e. formed from a single mass of natural vulcanized rubber material containing two troughs; one of which is upwardly facing for engaging the upper teeth and the other oriented downward for engaging the lower teeth. More recently, tooth positioners are more commonly formed as a set of two separate positioners, with one of a set being adapted to the upper arch and the other independently adapted to the lower arch. Other types of special-purpose positioners are sometimes formed to engage just on side or one quadrant of an arch.

The orthodontic tooth positioner, and methods for forming them were first disclosed in the orthodontic literature in 1946 by H. D. Kesling, a well-known and influential orthodontist of that day. Based on the work of Kesling, positioner-based therapy methods were developed and commercial support for those doctors using positioners was provided by orthodontic laboratories. Kesling published a number of articles extolling the virtues of tooth positioners, describing them as providing effective functional tooth-moving forces without any interference from bands, brackets or wires.

As stated above, both today and in the past, orthodontists choosing to treat patients with tooth positioners typically rely on the services of an orthodontic laboratory to form positioners for their patients. Orthodontic laboratories provide service for the custom-fabrication of a tooth positioner for an individual patient according to a treatment plan and a prescription provided by the attending orthodontist or dentist. For this process, a poured and cured stone replica of a patient's initial malocclusion is provided by the doctor for the laboratory's use.

The dental technicians within a laboratory first modify the stone model by cutting the mal-positioned teeth free of the model and the adjacent teeth. Next, a technician repositions the teeth on the model semi-rigidly into desired, ideal positions as specified by the doctor and as determined by the doctor's diagnosis and subsequent treatment plan. After the stone model has been modified or "corrected" in this manner, the model will be positioned within a tooth positioner-forming machine where through the simultaneous use of air pressure, vacuum and heat, a sheet of thermo-formable vinyl or other rubber-like or thermo-formable elastomeric material is "sucked-down" over the stone model (s). After forming the positioner in this manner, excess material is trimmed from the positioner, and it is sent back to the orthodontist's practice and an appointment is scheduled to seat the positioner in the mouth of the patient.

In the past, the process of forming a tooth positioner has been much more labor intensive. Rather than "sucking down" a sheet of thermo-formable material, it was necessary to first create a mold and then cast thermosetting materials or other materials that required heat, pressure and time to cure.

As can be appreciated, a completed laboratory-produced tooth positioner reflects the teeth in improved positions and orientations compared to the actual positions and orientations of the teeth at the beginning of a patient's treatment. When a new positioner is first placed on the patient's mal-occluded teeth, each tooth will tend to distort and load the elastomeric material adjacent to each tooth impression formed in the positioner. With the positioner fully seated on the patient's arches, the material adjacent to each tooth will

become elastically loaded, and within the elastomeric material of the positioner, energy will have been stored. Essentially, it is the slow dissipation of that stored energy, over time, that provides the gentle, continuous biologically effective force to which the bone underlying the tooth will respond, and the tooth will move into positions according to the gentle urging of the positioner.

As described, positioner-based treatment as first introduced by Kesling in the late 1940's. The positioners as taught by Kesling were based on relatively inelastic and relatively hard natural rubber materials of the day and therefore such positioners exhibited insufficient elasticity to accomplish primary tooth moving objectives. Such appliances were generally limited to effecting minor tooth movement near the end of treatment and for a period of time they could also be used as a post-treatment retainer of sorts. In order for the tooth positioners used by Kesling to serve as the primary tooth moving treatment modality, the laboratory step involving the physical repositioning of the "stone" teeth by the technician had to done in multiple, incremental steps, and multiple, incremental positioners were required. Each incremental step represented only partial movement toward ideal tooth positions. In addition to the constraints of requiring extensive coordination between the doctor and the laboratory, laboratory processing of the early positioners required a time consuming sequence of casting and heat curing. The total cost involved with such a complex process was acknowledged by Kesling as being prohibitive. As Kesling understood, the degree or extent to which a single tooth positioner can be used as the primary method for orthodontic treatment is dependent on the mechanical properties of the material from which the positioner is formed. Kesling lamented the limitations of his positioners but predicted that in the future, through use of then undeveloped materials, tooth positioner based therapy would hold great potential for serving as a primary treatment means.

Driven by both the potential and the limitations of tooth positioners, various substitutes for hard natural rubber were investigated by research groups as well as clinicians wishing to advance the tooth positioner-based treatment philosophy. In the United States, during the 1970's Cottingham, Warunek, Strychalski and Cunat all investigated medical grade polydimethyl silicate, a material known generically as silicone rubber or silicone elastomer. In Japan, Nishiyama, Kamada, and Horiuchi investigated dimethylvinyl siloxy polydimethylsiloane with a chloroplatinic acid catalyst, generically known as LTV vinyl silicone. Another Japanese researcher; Osama Yoshii developed a tooth positioner treatment methodology using the controlled variable durometer characteristic of LTV vinyl silicone and thus formed progressive positioners based on incremental increases in hardness of a series. Being generally transparent, non-staining, and hygroscopic, the engineered elastomers developed by these investigators solved some of the problems associated with Kesling's original tooth positioner. To a greater degree, tooth positioners formed from these new materials could be counted on as a dependable means for correcting orthodontic malocclusions. These softer, more resilient materials served in the mouth without discomfort, but still required extensive laboratory casting processes to form them. Nonetheless, as a result of the research described above, a group of elastomeric material systems are currently available for use in forming clear, highly elastic tooth positioners as well as a number of other common orthodontic appliances.

Generally, tooth positioners are popular with young, and perhaps self-conscious orthodontic patients in that they have attributes that reduce social or self-image concerns associated with their appearance during treatment. One fundamental attribute of tooth positioners is that they are removable by the patient, and since in some cases orthodontists prescribe that positioners be worn only after school and during sleep, teenage orthodontic patients have the option of removing their appliances. This allows teenage, as well as adults to avoid speech problems and personal appearance concerns that are commonly associated with conventional braces.

Beginning generally in the early 1980's, a general increased awareness of the advantages of tooth positioners by orthodontists again drove increased interest. The orthodontic community also noted the commercial success of both the laboratories that produced tooth positioners and the manufacturers and distributors who provided the catalyzable materials as well as the popularity of such appliances with patients. In particular, orthodontists realized that the original vision of Kesling, who first articulated the many potential advantages of positioner therapy, had been to a degree realized through the use of the more resilient modern materials.

Tooth positioners and tooth positioner-based orthodontic therapy evolved into its current status through the use of yet other new materials and new, simpler and less labor-intensive means of forming tooth positioners. As described above, the use of thin sheets of various thermo-formable plastics including vinyl and olefin-type materials has been adopted for current tooth positioners. This, along with an efficient forming process involving the rapid use of pressure, vacuum and heat, has replaced the prior molding and casting processes. Polypropylene in particular exhibits an ideal combination of properties. Particularly in its higher molecular density ranges, polypropylene exhibits desirable mechanical properties in that it is nearly transparent, and in the mouth it is non-reactive chemically and thoroughly biocompatible. One commercial source for the new positioner material is Raintree Essix, New Orleans, La. The use of these materials, including polypropylene in sheet form and in thicknesses of about 1 mm (before thermoforming), eliminates the time-consuming steps of mixing, catalyzing and curing (in some cases heat-curing in a pressure flask) as was required by the outmoded natural rubber, medical-grade urethane, silicone and vinyl silicone series materials. Being thermo-formable, positioners can be easily "sucked down" over the patient's reset stone model using heat, pressure and vacuum simultaneously. Since the processing of the new type of thin positioner is so markedly simplified, some orthodontists have even found it practical to form them directly in the orthodontic office, thus avoiding the cost, time and administrative tasks required by laboratory processing. To distinguish between the older types of positioners formed from medical-grade urethane, silicone or vinyl silicone materials, current thin, thermo-formed positioners are generally referred to as "aligners."

Once formed, aligners are typically trimmed to closely match the gingival margins of the teeth. When in position in a patient's mouth, current aligners are virtually invisible, and unnoticeable. Being thin, they do not appreciably interfere with speech as the older, much more bulky urethane, silicone and vinyl silicone-formed versions tended to do. Because of the combined advantages sited previously for tooth positioners combined with the thin, non-bulky, low profile afforded by aligners, aligners are even more readily tolerated by patients and are currently popular with orthodontists.

To demonstrate the general integration and importance of aligner-based treatment methods in the orthodontic field, a combination of current aligner-based therapy philosophies

and digital imaging/computer-driven rapid prototyping methods have resulted in the emergence of a significant commercial development described by U.S. Pat. No. 5,975,893 (Chishti et al.). A methodology is taught by Chishti et al. in which multiple aligners are formed for a patient and each upper and lower set of aligners is worn for a set period of time (e.g., about two weeks). Progressive sets of aligners are provided in which each set more aggressively biases a patient's teeth toward an ideal occlusion. Orthodontic patients undergoing such progressive treatment may typically wear from between 15 to 25 sets of progressive aligners. Over a period of time, the sequential and progressively biased positioners move teeth from their initial malocluded positions to a near finished and corrected state. This progressive aligner-based program is commercially offered to the orthodontic professional and is also marketed directly to the public by Align Technologies of Sunnyvale Calif. under the name "Invisalign." The Invisalign® program is promoted as "invisible braces" and as being a clear alternative to conventional braces.

Aligners, and the commercial fabrication of them is not limited to Align Technologies. Most orthodontic laboratories routinely form aligners according to prescriptions provided by orthodontists. Aligners also continue to be formed within the orthodontic offices. Even though not part of a progressive system such as the Invisalign® program, such laboratory or in-office-produced aligners perform a wide range of useful treatment functions including correction and retention. For those doctors opting to form their own aligners, methodologies taught by U.S. Pat. No. 5,692,894 (Schwartz et al.) provide one chair-side means of modifying previously formed aligners as may be required by the needs of any one patient.

U.S. Pat. No. 6,293,790, by the present inventor likewise provides a chair-side system of heated pliers useful for activating aligners as required as a patient's treatment progresses. The heated pliers exploit the thermoformable characteristic of the aligner material and permit them to be locally modified or activated.

Aligner-based therapy is an important and popular treatment modality used in orthodontics today. However, even though commercially successful, aligners still fall somewhat short of Kesling's original vision of being capable of fully treating the majority of patients presenting for orthodontic treatment. These remaining limitations can be seen for example in the fact that cases acceptable for the Invisalign® program must fall within the minor to moderate category in terms of severity of the malocclusion in order for aligners of the Invisalign® program to be effective. Patients exhibiting significant crowding, deep or open bites or excessively narrow occlusions present problems that are beyond the correction capabilities of present aligners. Because of this, for the majority of cases, aligners are still used in conjunction with conventional braces, or used at the end of treatment to accomplish a final aesthetic positioning of the teeth.

As can be appreciated, an individual tooth received within an intimately contacting, but desirably-biased recess or cavity formed within the polymeric shell of an aligner is urged to move in an orthodontically desirable net-vector direction by the slight positional biasing of the cavity. As previously described, as the aligner is positioned on any particular tooth, the difference between the position of the actual tooth, and the repositioned cavity of the aligner tends to load the polymeric shell material in regions just adjacent to the cavity. The stored energy thus imparted into the elastomeric material of the aligner slowly dissipates over time as the bone underlying the tooth physiologically responds to such therapeutic forces. The various corrective, therapeutic forces that are translated to the tooth in this manner can be characterized as: tipping the tooth in terms of torque; tipping the tooth in terms of angulation; rotating the tooth about its central axis; as well as subtle intrusive and in some cases, extrusive forces. Depending on the objectives of the treatment, some teeth may be expected to move bodily through the underlying bone and the gums into completely new locations along a patient's arches.

When treating a patient's teeth using an aligner, the effectiveness or intensity of these therapeutic forces decreases as treatment progresses. For instance, as treatment progresses the teeth will comply with the aligner and move as directed. After a tooth has moved to any significant degree toward its desired position, the energy stored within the resilient elastomeric shell of a conventional aligner will be correspondingly reduced and partially spent. Stated differently, as the aligner accomplishes its function of moving the teeth, the forces that it is capable of exerting on the teeth may drop off rapidly. During conventional aligner therapy, when treatment progresses to the point at which the aligner can no longer generate a sufficient level of therapeutic force that is above a minimum physiological threshold needed for tooth movement, the teeth will simply stop moving. For several reasons, such a situation is very undesirable. Traditionally, at such a point in treatment, a practitioner must arrange to have a new aligner formed, either within his office or by a support laboratory. In either case, the forming of a new aligner requires that impressions of the patient's teeth be taken again, and a new stone model made from the impressions, all of which involve attendant delay and expense. From the patient's point of view, this typically involves the inconvenience and expense of a separate appointment.

3. Solution to the Problem

In contrast to the prior art discussed above, the present invention employs orthodontic aligner auxiliaries that can be secured to openings in an aligner or other removable appliance to exert therapeutic forces on selected teeth. This enables aligners to used in treatment a much wider range of orthodontic cases and in treatment of orthodontic cases that are more severe. In addition, the orthodontic aligner auxiliaries can be removable or adjustable. This enables the therapeutic forces to be maintained, progressively changed, or reactivated over the course of treatment to significantly expand the capabilities of current aligner-based therapy and address the limitations discussed above.

SUMMARY OF THE INVENTION

This invention provides a method and apparatus for orthodontic treatment employing a removable aligner having a polymeric shell with a plurality of cavities shaped to receive teeth. A number of openings are formed that extend through the shell of the aligner into a cavity. An orthodontic aligner auxiliary can then be secured to the opening in the shell of the aligner to exert a therapeutic force on a tooth.

These and other advantages, features, and objects of the present invention will be more readily understood in view of the following detailed description and the drawings.

BRIEF DESCRIPTION OF THE DRAWINGS

The present invention can be more readily understood in conjunction with the accompanying drawings, in which:

FIG. **1** is an exploded perspective view of a patient's lower teeth **10** and a removable orthodontic aligner **20** with an opening **26**.

FIG. **1**(*a*) is a cross-sectional view of the orthodontic aligner **20** taken through one of its cavities **24**,

FIG. **2** is an exploded detail perspective view of the opening **26** in the orthodontic aligner **20** and an orthodontic aligner auxiliary **30**.

FIG. **2**(*a*) is a front perspective view of the orthodontic aligner auxiliary **30** in FIG. **2**.

FIGS. **3**(*a*) through **3**(*c*) are side elevational views of a progressive series of orthodontic aligner auxiliaries **30***a*–**30***c* with tapered tips **34**.

FIGS. **4**(*a*) through **4**(*c*) are side elevational views of a progressive series of orthodontic aligner auxiliaries **30***a*–**30***c* with rounded tips **34**.

FIG. **5** is a detail perspective view of a threaded orthodontic aligner auxiliary **30** having a slotted head **32**.

FIG. **6** is a detail perspective view of a threaded orthodontic aligner auxiliary **30** having a head **32** with a recess to accommodate an Allen wrench.

FIG. **7** is an exploded detail perspective of an orthodontic aligner auxiliary **30** having a nut **40** that snaps into an opening **26** of an aligner **20**, and a screw **42** that threads into the nut **40**.

FIG. **8** is a detail perspective view of a portion of an aligner **20** with two orthodontic aligner auxiliaries **30***a* and **30***b* that exert a couple on a tooth **10**.

FIG. **8**(*a*) is a horizontal cross-sectional view of an aligner **20** with two orthodontic aligner auxiliaries **30***a* and **30***b* that exert a couple on a tooth **10**, corresponding to the FIG. **8**.

FIG. **9** is a detail perspective view of an aligner auxiliary **30** used to anchor an end of a rubber band **52**.

FIG. **10** is a detail perspective view of a rubber band **52** exerting a retractive force between two orthodontic aligner auxiliaries **30***a* and **30***b*.

FIG. **11** is a detail perspective view of a spring **54** exerting an expanding force between two orthodontic aligner auxiliaries **30***a* and **30***b*.

FIG. **12** is a detail perspective view of a connecting device **50** that can be used to exert either an expanding force or a retractive force between two orthodontic aligner auxiliaries **30***a* and **30***b*.

FIGS. **13**(*a*) and **13**(*b*) are detail perspective views of the interior surface of one of the cavities of the aligner **20** showing a recessed land **28** surrounding the opening **26** in the aligner **20**, before and after insertion of an orthodontic aligner auxiliary **30**.

FIG. **14** is an exploded detail perspective view of an embodiment of the present invention in which orthodontic aligner auxiliaries **30** extend into the interproximal spaces between teeth **10** to exert a retentive force holding the aligner **20** in place.

FIGS. **15**(*a*) and **15**(*b*) are front perspective views of embodiments in which the orthodontic aligner auxiliaries include ornamental or decorative designs.

DETAILED DESCRIPTION OF THE INVENTION

Turning to FIG. **1**, an exploded perspective view is shown of a patient's lower teeth **10** and a removable orthodontic aligner **20**. For the purposes of this discussion, a removable aligner of the type marketed under the Invisalign® brand is depicted in FIG. **1**. However, it should be understood that other types of removable orthodontic aligners and positioners could be substituted. In particular, the removable aligner **20** has a polymeric shell with a plurality of cavities **24** to receive the patient's teeth **10**, as illustrated in FIG. **1**(*a*). The aligner **20** can be used to engage the patient's upper teeth, lower teeth, or a subset of either of these.

A number of openings **26** extend into the shell of the aligner **20** from selected cavities **24**. These openings **26** can be formed during the molding process for the aligner **20** or subsequently created by the practitioner. In the preferred embodiment of the present invention, the practitioner creates openings at desired locations in selected cavities **24** using a hand-held instrument to pierce the shell of the aligner **20**. An opening **26** can either extend completely through the shell or extend only partially into the shell from its interior surface depending on the type of orthodontic aligner auxiliary **30** to be inserted into the opening **26**, as will be discussed below.

FIG. **2** is an exploded detail perspective view of an orthodontic aligner auxiliary **30** being inserted into an opening **26** in an aligner **20**. The embodiment of the orthodontic aligner auxiliary **30** shown in FIG. **2**(*a*) is a "tack" having a head **32**, an opposing tapered tip **34**, and recessed circumferential groove **36** between the head **32** and tip **34**. The dimensions of the tip **34** and groove **36** are selected so that the tip **34** can be pushed through the opening **26** in the aligner **20** by application of a nominal axial force. The tack **30** can be made of a resilient polymer so that the tip **34** re-expands to its normal size after passing through the opening **26** in the aligner **20**. In contrast, the dimensions of the head **32** of the tack **30** are selected so that it will not readily fit through the opening **26**. Thus, after insertion of the tip **34** through the opening **26**, the head **23** and tip **34** are on opposing sides of the aligner **20** and thereby secure the orthodontic aligner auxiliary **30** to the opening **26**. For example, depending on the designer's choice of materials and dimensions, the tack **30** can be secured by a snap fit or a friction fit with the opening **26**. The direction of insertion of the tack **30** is also a matter of design choice. The tip **34** of the tack **30** can be inserted from the outside of the aligner **20** so that the head **32** will be located on the exterior of the polymeric shell and the tip **34** will contact the tooth **10** to exert a therapeutic force on the tooth when the aligner **20** is in placed in the patient's mouth. Alternatively, the tip **34** can be inserted from the inside of the aligner **20** so that the head **32** will be located on the interior of the shell and will contact the tooth **10**.

The practitioner can activate an aligner **30** by performing the following steps: With the aligner **30** seated on the patient's teeth, the configuration of the aligner will be visually assessed by the doctor on a tooth-by-tooth basis to identify the most mechanically-advantageous points at which to impinge additional corrective forces. Temporary marks will be placed on the polymeric shell corresponding to those identified points and the aligner **20** is then removed from the patient's mouth. The doctor will then pierce the aligner **20** at the identified and marked points using a pliers-mounted punch die. The pliers will create openings **26** of precise dimensions through the polymeric shell of the aligner **20**. An orthodontic aligner auxiliary **30** can then be secured in the opening **26** of the aligner **20**, in a snap-fit fashion, for example, and thus will be securely retained in the opening **26**. For example, retention of the orthodontic aligner auxiliary **30** in the aligner **20** can be achieved by means of a precise sizing relationship of a circumferential groove **36** in the shank of the orthodontic aligner auxiliary **30** and the opening **26** formed through the polymeric shell. With the orthodontic aligner auxiliary **30** positioned thusly, the tooth-contacting tip **34** of the orthodontic aligner auxiliary **30** will then extend into the interior of a cavity **24** in the polymeric shell of the aligner **20**. Multiple orthodontic

aligner auxiliaries **30** can be retained in the polymeric shell of the aligner **20** and each cavity **24** of the aligner **20** may have one or more such devices **30** projecting into it, if necessary.

Other embodiments of the orthodontic aligner auxiliary **30** employ other means of retention as described below but each of these can be also accomplished solely, or augmented by adhesive bonding. Bonding of the orthodontic aligner auxiliary **30** onto or into the polymeric shell of a removable aligner **20** requires the use of an orthodontic adhesive system and requires both the polymeric shell and the orthodontic aligner auxiliary **30** be formed of a material capable of cross-linking or polymerizing with the adhesive system. For example, orthodontic aligner auxiliaries **30** may be formed from FDA-sanctioned food grade polycarbonate (Lexan) and the polymeric shell may also be thermo-formed from polycarbonate. An acrylic monomer adhesive system based on liquid and powder components, where the liquid contains a borane catalyst would provide the needed bonding characteristics. Adhesive systems based on a liquid/paste system consisting of styrene monomers and diglycedal methacrylate would likewise function but may require that the polycarbonate bonding surfaces be pre-treated with a conditioner consisting of the clear liquid component of such a system. Urethane dimethacrylate systems based on a photo-initiator (light cure) would also provide suitable bonding characteristics. Other well-known thermoformable dental materials other than polycarbonate may likewise provide adequate bonding characteristics and other adhesive systems used in dentistry and orthodontics may likewise serve the intended bonding function.

Whether activating an aligner to exert extra force on specific teeth, or reactivating an aligner, the aligner **20** with its orthodontic aligner auxiliaries **30** are first installed in the patient's mouth. In doing so, the aligner **20** is pushed down to its fully seated position on the patient's arches. The tooth-contacting tips **34** of the orthodontic aligner auxiliaries **30** contact the various mal-positioned teeth **10** at pre-identified points. Since the tip **34** of each orthodontic aligner auxiliary **30** extends into the interior of a cavity **24** of the aligner **20**, and since those tips **34** first contact the teeth **10** as the aligner **20** is seated, they positively hold the adjacent material of the aligner **20** back from contact with the tooth **10** and thereby create space between the inner walls of a cavity **24** and the surface of a particular tooth **10**. The region of the aligner **20** adjacent to the orthodontic aligner auxiliary **30** must distort and stretch to accommodate the space created. In doing so, the polymeric material of the aligner **20** is loaded so that energy is stored within the shell material. In the case of a reactivated appliance, the original aligner **20** is then in a reactivated condition and once again capable of imparting physiologically effective forces on the teeth **10** to move them in intended directions according to a treatment plan. In the case of a new aligner **20**, it is in a modified condition, capable of delivering higher and more effective forces than it would be capable of alone.

Orthodontists have investigated the relationship between the interval between patient visits and the amount of corrective response that patients typically demonstrate during any set interval of time. Based on this investigation, orthodontists generally establish an interval of about six to eight weeks between a patient's appointments. In the case of a patient being treated with aligner-based therapy, it is possible for aligners to accomplish sufficient correction in less than this time interval. In such a case it is therefore probable that an aligner may undesirably dissipate its force-generating capabilities in less than a six to eight week interval. To avoid having to schedule more frequent appointments and the fabrication of additional aligners, a series of orthodontic aligner auxiliaries **30** (or tacks) may be given to the patient along with the orthodontist's instructions on how to remove and install them in an aligner **20** unassisted, at home. The tapered features of the heads **32** of the orthodontic aligner auxiliaries **30** allow their removal from an aligner **20** using a household fingernail trimmer. Therefore, it is not unreasonable to expect a patient to successfully use such a trimmer to cut off the externally-extending head **32** of an orthodontic aligner auxiliary **30**, thereby permitting it to be removed from the aligner **20** and replaced with another.

In cases where the aligner **20** has been previously activated through use of the present invention, a patient may be instructed to install a series of tacks **30***a*–**30***c* of progressive lengths, as shown in FIGS. **3**(*a*) through **3**(*c*), thus enabling the exertion a progression of therapeutic forces on a patient's teeth.

Another means of exerting a progression of corrective therapeutic forces on a tooth is achieved by using a progression of tack elasticities. As attributed above to Osama Yoshii, and based on the controlled variable durometer characteristic of LTV vinyl silicone for example, such a patient-activated methodology is possible. For this, a series of tacks can be produced in a material capable of exhibiting a range of durometer hardnesses such as 45, 60 and 80 Shore B hardnesses, referred to as "soft", "medium" and "hard". Since such devices could inherently have larger, more spherically shaped tooth contacting features, as shown in FIGS. **4**(*a*) through **4**(*c*), a practitioner or patient would insert the orthodontic aligner auxiliary **30** from inside a cavity **24**.

As described, one aspect of the present invention involves a series of lengths such as short, medium and long, and another involves a progression of hardnesses. Both of these progressions can usefully be combined in one series. For convenience, different stages of any such progression could include orthodontic aligner auxiliaries **30** that are formed from a color-coded material for easy coordination of their use as the patient progresses from one to the next.

Alternatively, a tack **30** could be formed with a series of circumferential grooves or ribs spaced along its longitudinal axis. The force exerted by the tack **30** on a tooth **10** can be adjusted by varying the pushing or pulling the tack **30** so that a different groove and/or ribs engage the shell of the aligner **20**.

Other embodiments of the orthodontic aligner auxiliary are possible. For example, a tack having an enlarged head and a short shaft (not shown) could be inserted into an opening from the inside of the aligner. The shaft of the orthodontic aligner auxiliary could be bonded to the opening or held in place by friction. The head protrudes into a cavity of the aligner and exerts a therapeutic force on a tooth when the aligner is installed in the patient's mouth. In this embodiment, the opening need not necessarily extend completely through the shell of the aligner. As previously discussed, a progression of forces can be exerted on a tooth by means of a series of tacks of varying length or elasticity.

Another embodiment of the present invention that facilitates both at-home patient activation and chair-side activation can be seen in the following. First, an opening **26** is created in the polymeric shell extending into a cavity **24**, as previously discussed. An orthodontic aligner auxiliary **30** having a threaded shaft **38** is then screwed into the opening **26** in the shell, so that it engages the inside surface of the opening **26** in a secure, self-threading and adjustable

manner, as illustrated in FIGS. **5** and **6**. For example, FIG. **5** shows a threaded orthodontic aligner auxiliary **30** having a slotted head **32** adapted for receiving a conventional screw driver. FIG. **6** shows a threaded orthodontic aligner auxiliary **30** having a head **32** with a recess to receive accommodate an Allen wrench. Other types of hand-held activation instruments could be readily substituted.

Yet another embodiment involving an adjustable two-part orthodontic aligner auxiliary **30** that facilitates both at-home patient activation and chair-side activation can be seen in FIG. **7**. First a generally rectangular opening of predetermined dimensions is created through the polymeric shell of the aligner **20**. A "nut" component **40** is inserted to engage the opening. A tapered portion of the nut **40** extends through the opening **26** in the shell and the nut **40** is retained in the square groove located around the periphery of the nut **40** between the tapered section and the head or flange of the nut **40**. The nut **40** has a threaded hole. A screw **42** is then threaded into the nut **40**, as shown in FIG. **7**, so that the tip of the screw **42** extends into the cavity **24** of the aligner **20** and contacts a tooth **10**. The degree of force exerted by the screw **42** can be periodically adjusted by rotating the screw **42** relative to the nut **40** by means of a hand-held activation instrument such as a screwdriver or Allen wrench.

Certain teeth will naturally be positioned farther from their desired positions than other teeth, or stated differently, certain teeth will require greater correction than others. In such cases, a doctor may first identify those teeth requiring the greatest degree of correction. In the instance of a severely distal-lingually rotated maxillary lateral right for example, one orthodontic aligner auxiliary **30***a* may be installed in the cavity of a polymeric shell so as to be located near the incisal edge of the crown of the tooth **10**, and near the mesial edge of the tooth **10**. This tack **30***a* would pass through the aligner **20** from the labial side of the generally trough-shaped polymeric shell. A second orthodontic aligner auxiliary **30***b* may be inserted through the lingual side of the same cavity, as shown in FIGS. **8** and **8**(*a*). Such a lingually-positioned tack **30***b* may also be located near the incisal edge of the tooth **10**, but near its distal edge. In this way, the aligner, when seated, creates a rotational coupling of two forces created by the two tacks **30***a* and **30***b* working in concert, which can very aggressively impart a significantly higher rotational force than can be achieved by one tack acting alone. Further, through the availability of a system of progressive lengths or progressive elasticities, such couple-based progressive therapeutic forces can be part of a patient-activated modality between appointments. In treatment, combinations of orthodontic aligner auxiliaries can generate various types of therapeutic forces that can be directed to individual mal-positioned teeth in a manner where rotational correction can be accomplished with a mesially-directed or lingually-directed emphasis or bias, thus providing the practitioner with a comprehensive means of differentially repositioning the teeth. For example, the mesial labial device described in the example of couple-type forces may be a "short"; whereas the lingual distal device may be a "long". In this manner, the practitioner may be able to emphasize the labial repositioning of a tooth, while simultaneously accomplishing aggressive rotational correction through coupled labial-lingual forces. In this manner, specific and aggressive repositioning of the worst positioned teeth can be accomplished while overall, the removable aligner **20** is generally correcting the positions of the rest of the moderately mal-positioned teeth.

In terms of morphology or anatomy of the human teeth, teeth can be broadly categorized as falling into one of two groups. One group includes paddle-shaped teeth and the other group includes conically-shaped teeth. Anterior tooth can be considered as falling into the paddle-shaped category, and cuspids and bicuspids may be considered as falling into the conically shaped category. The molar teeth may be considered as falling somewhere in between these two classifications. Generally, the cavities formed in the polymeric shell of a conventional aligner can translate corrective forces much more readily to paddle-shaped teeth compared to conically shaped teeth. A conventional aligner tends to lack the ability to establish a foothold on such teeth, particularly if the aligner is formed to transmit a rotational force. To describe this more clearly, in the example above, a couple was created to aggressively correct a maxillary lateral tooth (a paddle-shaped tooth) in terms of rotation. A conical or round, tapered tooth on the other hand does not provide the relatively flat lateral surfaces present in a maxillary lateral tooth. To improve on this limitation, a practitioner may place an orthodontic aligner auxiliary **20** into an opening **26** in the polymeric shell at an optimal point on a generally round tooth to provide the foothold needed by an aligner **20** to better accomplish a difficult rotational correction. For example, even if a tooth is generally conically shaped, the teeth will generally exhibit anatomical features such as notches, fissures and developmental grooves allowing an orthodontic aligner auxiliary **30** to gain rotational contact.

In addition to direct tooth contact to deliver therapeutic forces, on any one single tooth, other embodiments of the present invention perform other useful and treatment-enhancing functions that involve movements of two or more teeth or groups of teeth. For example, one embodiment of the present invention may be used in the following manner. As before, the polymeric shell is first pierced, creating an opening into a cavity, typically accomplished by hand-held pliers or other means of creating an opening **26** into a cavity **24** of predetermined dimensions to positively retain an orthodontic aligner auxiliary **30**. The opening **26** may be round, for example, and of a specific diameter. Other embodiments of the orthodontic aligner auxiliary **30** may require that the opening **26** be oval, "race-track"-shaped, rectangular, square and so on. In any case, an orthodontic aligner auxiliary **30** with a shape corresponding to the opening **26** can be retained in the opening **26**, thereby producing a positive, stable and dependable retention. Once retained on the polymeric shell in this manner, the orthodontic aligner auxiliary **30** can perform the function of a hook for engaging elastomeric traction, as shown for example in FIG. **9**. Sometimes called "rubber bands", such combinations of hooks and elastomeric traction units are very common to all types of orthodontic treatment.

The latitude to position such an elastic hook virtually anywhere on an aligner **20** has great utility to the orthodontist in resolving both minor corrections, as well as basic corrections such as closing or creating spaces. In order to allow a tooth to be moved by an aligner-mounted elastomeric traction hook, an orthodontist typically may cut away a small area of the polymeric shell corresponding to the area in which the tooth is to be pulled and a conventional steel hook may be attached to the tooth to be moved. Without the restrictions of the shell and its tight-fitting cavity, a tooth pulled by such a device along with a rubber band will respond and move into a more desirable position. Once accomplished, the hook can be very easily removed from the shell. Normally, installing and then removing a hook from conventional metallic armamentarium would inevitably require either destroying a component upon removal, or the

mechanical bonding of a hook with an orthodontic adhesive and then de-bonding, both of which are time consuming and comparatively expensive. So, one embodiment of the present invention allows a simple and flexible installation of a hook on an aligner.

Yet other embodiments of the present invention useful for the corrective movement of multiple teeth require that the polymeric shell be modified. For some treatment objectives, groups of teeth **10** must be moved relative to each other. To accomplish this, the aligner **20** may be trimmed so that very little material connects one segment of the shell from another. For some patients, treatment requires that the aligner **20** actually be cut into two separate, disconnected sections **20***a* and **20***b*. In both cases, one section of the shell contains cavities engaging one or more teeth to be moved, as does the other section. Orthodontic aligner auxiliaries **30***a* and **30***b* are retained in both of the two sections of the aligner **20***a* and **20***b*, allowing them to be moved relative to each other. One type of relative movement of the sectioned shells involves retractive forces that draw two sets of teeth together, as shown for example in FIG. **10** using a rubber band **52**. Such forces can also be generated using a wide variety of other types of retractive devices, such as flat springs, tension coil springs, threaded systems, magnets, elastomeric units and the like. Expansive forces that move two teeth or two groups of teeth apart can be exerted by means of an expanding device, such as an expansion springs **54** (depicted in FIG. **11**), flat springs, drive screws **50** (depicted in FIG. **12**), magnets and the like.

As can be appreciated, current orthodontic practice involves several common means for achieving tractive forces as well as expansive forces as described and anyone familiar with those methods and devices will readily understand ways in which such means can be adapted to sectioned aligner-based treatment via attachment methods based on the present invention.

To differentiate the various functions of the present invention, some of the shell-mounted devices of the present invention are described as functioning in a direct, tooth-contacting, tooth-moving manner whereas others such as the hook embodiment described above serve in a non-tooth contacting/tooth-moving function. Since the non-tooth contacting embodiments of the present invention are nonetheless retained in the polymeric shell via a snap fit and extend at least in part through openings in the shell, certain features of the device must be prevented from inadvertent and undesirable tooth contact. To avoid this, hand-held pliers with appropriate dies can be heated and brought into compressive contact with the polymeric shell. Such instruments take advantage of the thermoformable characteristic of the shell polymeric material to form a recessed land **28** locally in the shell, as illustrated in FIGS. **13**(*a*) and **13**(*b*). Another means of producing such recessed lands **28** involve installing patterns on the original stone models so that the lands **28** are automatically pre-formed in the polymeric shell of the aligner **20** as it is originally thermoformed. Such lands **28** can be located at pre-determined ideal positions to receive a non-tooth contacting embodiment of the orthodontic aligner auxiliary **30** as selected by the orthodontist. By creating a small raised land **28**, and by placing the opening **26** into a cavity **24** on the land **28**, an orthodontic aligner auxiliary **30** can be retained in the shell with the tip portions **34** of the orthodontic aligner auxiliary **30** held clear of the tooth surface. This prevents any inadvertent and undesirable tooth movement from occurring. The orthodontic aligner auxiliaries **30** used in this embodiment may have inwardly projecting tips that are blunted to reduce the required height of the land **28**.

In the case of a device being retained in an opening **26** located on an outwardly projecting land **28**, the physical, outside dimension of the land **28** itself may be capable of providing additional stability and retention beyond that achievable just by the groove-based retention within the opening **26** as described above. In such an embodiment, the inwardly-facing side of the orthodontic aligner auxiliary **30** would have land-accommodating features in addition to the tapered features and the groove-type retention in the opening. The additional support and stability imparted to the orthodontic aligner auxiliary **30** would dissipate forces and hold the device in a more stable orientation on the outer surface of the aligner **20**. Additional support may be necessary in the case of an orthodontic aligner auxiliary **30** serving in the role of a hook, where a stout, high-pull elastic is engaged to it. Such a device/land inter-fit would also be further structurally enhanced via the use of bonding, where adhesive is positioned and cured in the interface between the outside surfaces of a formed land **28** and the inwardly facing concave and accommodating features of the orthodontic aligner auxiliary **30**.

In the foregoing, the descriptions of the various embodiments and functions of the present invention have been generally described as accomplishing correction of an individual tooth and corrections involving multiple teeth. A third broad category of applications for which the present invention is directed involves improving aligner-based treatment modality in general. In order to be effective, aligners **20** must at all times remain fully seated on a patient's arches. Since the biasing of the cavities **24** tends to cause an aligner **20** to lift off of the teeth **10**, an embodiment of the present invention functions to insure that the entire aligner **20** is retained on the teeth **10** in the desired, fully-seated position at all times. For this purpose, a number of orthodontic aligner auxiliaries **30** can may be placed at positions around an upper or lower aligner **20** at points best suited for appliance retention. The orthodontic aligner auxiliaries **30** are positioned on the aligner **20** closer to its gingival edge and at locations where the orthodontic aligner auxiliaries **30** will project inwardly into the interproximal spaces between teeth **10**, as illustrated in FIG. **14**. Since teeth **10** are generally bell-shaped, and particularly since the spaces between teeth **10** provide a mechanical undercut, the inwardly-projecting tips of the orthodontic aligner auxiliaries **30** can find a positive, retentive foothold. With the orthodontic aligner auxiliaries **30** located as described, the aligner **20** is first partially seated on the teeth **10** and due to tooth contact, the retentive points first cause the labial or lingual sides of the shell of the aligner **20** to flex outward. As the aligner **20** becomes fully seated, the retentive tips of the orthodontic aligner auxiliaries **30** find their intended positions closer to the gum between the teeth **10**, allowing the sides of the aligner **20** to return to their passive configuration, thus positively forcing the retentive tips of the orthodontic aligner auxiliaries **30** to wedge into their intended retentive undercut positions.

Another useful application of the present invention involves the use of orthodontic aligner auxiliaries **30** as x-ray markers. At several points during orthodontic treatment as well as for pre-treatment planning, it is useful for an orthodontist to take lateral x-rays of the patient's head. Sometimes called "head plates," such x-rays allow the orthodontist to analyze the positions of the roots relative to each other and relative to the supporting alveolar bone. Sometimes difficulty is encountered associating structure seen on an x-ray with the actual oral anatomy. In such cases, one or more of the orthodontic aligner auxiliaries **30** can be

formed from a plastic that is blended with a radio-opaque filler such as magnesium dioxide in a ratio of about 35 parts per million. Such an addition allows the orthodontic aligner auxiliary **30** to serve as a convenient marker. An orthodontist in this case would install a marker device on an aligner **20** in the general region of scrutiny. Such markers then would provide a physical reference from which to ascertain the exact location of features seen on an x-ray image.

In addition, radio-opacity is useful as a safety feature in general. For example, the polymeric shell of an aligner **20** can be cut into two pieces, as previously discussed. Sometimes aligners **20** are formed to conform only to the front teeth and these too can be trimmer smaller. As a result, aligners **20** can become sufficiently small to be aspirated by a patient. If an aligner **20** is aspirated and it becomes necessary to surgically remove the aligner **20**, its position within the patient's airway or lungs can first be ascertained by x-ray imaging if the aligner **20** has been formed with a radio-opaque additive or radio-opaque marker.

The present invention can also be useful in other fields that are not directly related to tooth movement. Orthodontists historically have rated the factor of patient cooperation as one of the most important factors in determining the quality of the finished result of orthodontic treatment. If patients do not follow the orthodontist's instructions for hygiene, replacement of rubber bands, activation of an appliance mechanism, or even basic use of an appliance, the treatment assumptions regarding response and progress of treatment can be negated. Orthodontists have resorted to all sorts of means to get patients positively involved in their treatment and therefore more likely to be cooperative. One successful tactic has been to provide means for the patient's treatment to serve as a vehicle for self-expression. For example, many of the urethane elastomeric materials common in treatment are available in a wide variety of colors, including glow-in-the-dark versions. These modalities have been very successful in adding fun to otherwise aversive aspects of treatment, and therefore the essential element of patient cooperation. As described above, embodiments of the present invention can be offered in the same, currently available series of colors. Additionally, the orthodontic aligner auxiliaries can be produced in ornamental or decorative shapes and profiles **60**, as shown for example in FIGS. **15***a* and **15***b*, so that when retained by the aligner **20** display such things as astrological signs and other symbols that again could be offered in both a series of colors and glow-in-the-dark variations.

Another similar embodiment that may serve as a vehicle for self-expression by the patient are devices that contain a micro-sized sealed battery and a light-emitting diode or other light source. One can only marvel at the excitement that a young orthodontic patient would enjoy through showing various colored or flashing lights on his braces to his or her friends. Orthodontists make no exceptions in using any tools at their disposal to gain a cooperative attitude from their patients and a cooperative attitude can positively impact treatment results as much as any functional device or innovative treatment method.

The above disclosure sets forth a number of embodiments of the present invention. Other arrangements or embodiments, not precisely set forth, could be practiced under the teachings of the present invention and as set forth in the following claims.

I claim:

1. An apparatus for orthodontic treatment comprising:

a removable orthodontic aligner having a polymeric shell with a plurality of cavities shaped to receive teeth, said shell having at least one opening extending through the shell from a cavity; and

an orthodontic aligner auxiliary inserted through and retained by the opening in the shell of the orthodontic aligner by a snap fit to exert a therapeutic force on a tooth.

2. The apparatus of claim **1** wherein the orthodontic aligner auxiliary further comprises:

a nut securable by a snap fit to the opening in the shell of the orthodontic aligner and having a threaded hole; and

a screw having a threaded portion to adjustably engage the nut.

3. The apparatus of claim **1** wherein the orthodontic aligner auxiliary is bonded to the opening in the shell.

4. The apparatus of claim **1** wherein the orthodontic aligner auxiliary comprises a protrusion extending through the opening and into the cavity of the shell to contact and exert a therapeutic force on a tooth.

5. The apparatus of claim **1** wherein the orthodontic aligner auxiliary comprises a plurality of removable tacks of progressive length, wherein each tack can be secured to and removed from the opening in the shell in a predetermined sequence over time, thereby exerting a progression of therapeutic forces on a tooth.

6. The apparatus of claim **1** wherein the orthodontic aligner auxiliary comprises a plurality of removable tacks having progressive elasticities, wherein each tack can be secured to and removed from the opening in the shell in a predetermined sequence over time, thereby exerting a progression of therapeutic forces on a tooth.

7. The apparatus of claim **1** wherein the opening extends through the shell, and wherein the orthodontic aligner auxiliary comprises:

a head larger than the opening in the shell;

a circumferential groove to engage the opening in the shell; and

a tip insertable through the opening in the shell so that the circumferential groove engages the opening.

8. The apparatus of claim **7** wherein the tip is tapered.

9. The apparatus of claim **1** further comprising an ornamental attachment securable to the opening in the shell.

10. The apparatus of claim **1** wherein the orthodontic aligner auxiliary further comprises a radio-opaque marker.

11. The apparatus of claim **1** wherein the shell has a plurality of openings extending from a tooth, with orthodontic aligner auxiliaries secured to each opening to exert a couple on the tooth.

12. The apparatus of claim **1** wherein the orthodontic aligner auxiliary further comprises a protrusion extending into the interproximal space between adjacent teeth and exerting a retentive force to hold the shell fully seated on the teeth.

13. An apparatus for orthodontic treatment comprising:

a removable orthodontic aligner having a polymeric shell with a plurality of cavities shaped to receive teeth, said orthodontic aligner having:

(a) a first segment for engaging a first set of teeth having at least one opening;

(b) a second segment movable relative to the first segment for engaging a second set of teeth and having at least one opening;

a first orthodontic aligner auxiliary securable to the opening in the first segment;

a second orthodontic aligner auxiliary securable to the opening in the second segment; and

a connecting member extending between the first orthodontic aligner auxiliary and the second orthodontic aligner auxiliary to exert a therapeutic force on the first and second sets of teeth.

14. The apparatus of claim **13** wherein said connecting member comprises a retractive device.

15. The apparatus of claim **13** wherein said connecting member comprises an expanding device.

16. A method of orthodontic treatment comprising:

forming a removable orthodontic aligner having a polymeric shell with a plurality of cavities shaped to receive teeth

creating at least one opening extending through the shell of the orthodontic aligner from a cavity; and

inserting an orthodontic aligner auxiliary through the opening in the shell of the orthodontic aligner so that the orthodontic aligner auxiliary is retained in the opening by a snap fit and exerts a therapeutic force on a tooth.

17. The method of claim **16** wherein the orthodontic aligner auxiliary is bonded to the opening in the shell.

18. The method of claim **16** further comprising the step of plastically deforming the shell adjacent to the opening.

19. A method of orthodontic treatment comprising:

providing a removable orthodontic aligner having a polymeric shell with a plurality of cavities shaped to receive teeth, said orthodontic aligner having a first segment for engaging a first set of teeth and a second segment for engaging a second set of teeth; said first and second segments being movable relative to one another;

creating a first opening in the first segment of the orthodontic aligner;

creating a second opening in the second segment of the orthodontic aligner;

securing a first orthodontic aligner auxiliary to the first opening;

securing a second orthodontic aligner auxiliary to the second opening; and

attaching a connecting member between the first orthodontic aligner auxiliary and the second orthodontic aligner auxiliary to exert a therapeutic force on the first and second sets of teeth.

20. The method of claim **19** wherein the connecting member comprises a retractive device.

21. The method of claim **19** wherein the connecting member comprises an expanding device.

22. A method of orthodontic treatment comprising:

forming a removable orthodontic aligner having a polymeric shell with a plurality of cavities shaped to receive teeth

creating at least one opening extending into the shell of the orthodontic aligner from a cavity; and

removably securing each of a plurality of orthodontic aligner auxiliaries to the opening in the shell of the orthodontic aligner in a predetermined sequence over time, whereby said orthodontic aligner auxiliaries exert a progression of therapeutic forces on a tooth.

23. The method of claim **22** wherein the orthodontic aligner auxiliaries comprise a plurality of removable tacks of progressive length.

24. The method of claim **22** wherein the orthodontic aligner auxiliaries comprise a plurality of removable tacks having progressive elasticities.

25. An apparatus for orthodontic treatment comprising:

a removable orthodontic aligner having a polymeric shell with a plurality of cavities shaped to receive teeth, said shell having at least one opening extending through the shell into a cavity; and

a tack removably insertable through and being retained by the opening in the shell by a snap fit to exert a therapeutic force on a tooth, said tack having:

(a) a tip larger than the opening in the shell, but insertable through the opening by exertion of an external force to temporarily distend the opening; and

(b) a head larger than the opening in the shell, thereby engaging the shell between the tip and head of the tack after insertion of the tip through the opening.

26. The apparatus of claim **25** wherein the tack is comprised of a resilient polymer.

27. The apparatus of claim **25** wherein the tack is inserted from the cavity through the opening in the shell with the head remaining in the cavity to exert a therapeutic force on a tooth.

28. The apparatus of claim **25** wherein the tip of the tack is inserted through the opening in the shell into the cavity to exert a therapeutic force on a tooth.

29. The apparatus of claim **25** wherein the tack further comprises a circumferential groove between the tip and head to engage the opening in the shell.

30. The apparatus of claim **25** wherein the tip of the tack is tapered.

* * * * *