US 20050250075A1

(19) United States

(12) Patent Application Publication

(10) Pub. No.: US 2005/0250075 A1

(43) Pub. Date: Nov. 10, 2005

Taub et al.

(54) METHOD FOR PREPARING A PHYSICAL PLASTER MODEL

(76) Inventors: **Eldad Taub**, Reut (IL); **Avi Kopelman**, Ramat Chen (IL)

Correspondence Address:
NATH & ASSOCIATES
1030 15th STREET, NW
6TH FLOOR
WASHINGTON, DC 20005 (US)

(21) Appl. No.: 10/676,257

(22) Filed: Oct. 2, 2003

Related U.S. Application Data

(60) Provisional application No. 60/415,931, filed on Oct. 3, 2002. Provisional application No. 60/422,782, filed on Oct. 31, 2002.

Publication Classification

(51) Int. Cl.[7] A61C 11/00

(52) U.S. Cl. 433/213

(57) ABSTRACT

The invention provides a method for creating a physical teeth model. The method comprises the following steps: providing a virtual three dimensional (3D) representation of a patient's dentition that comprises at least a region of the teeth that includes a tooth stump on which a crown is to be fitted or a region on to which a bridge is to be fitted; and preparing a physical model of the jaws of a subject from a blank, based on information from said virtual 3D image.

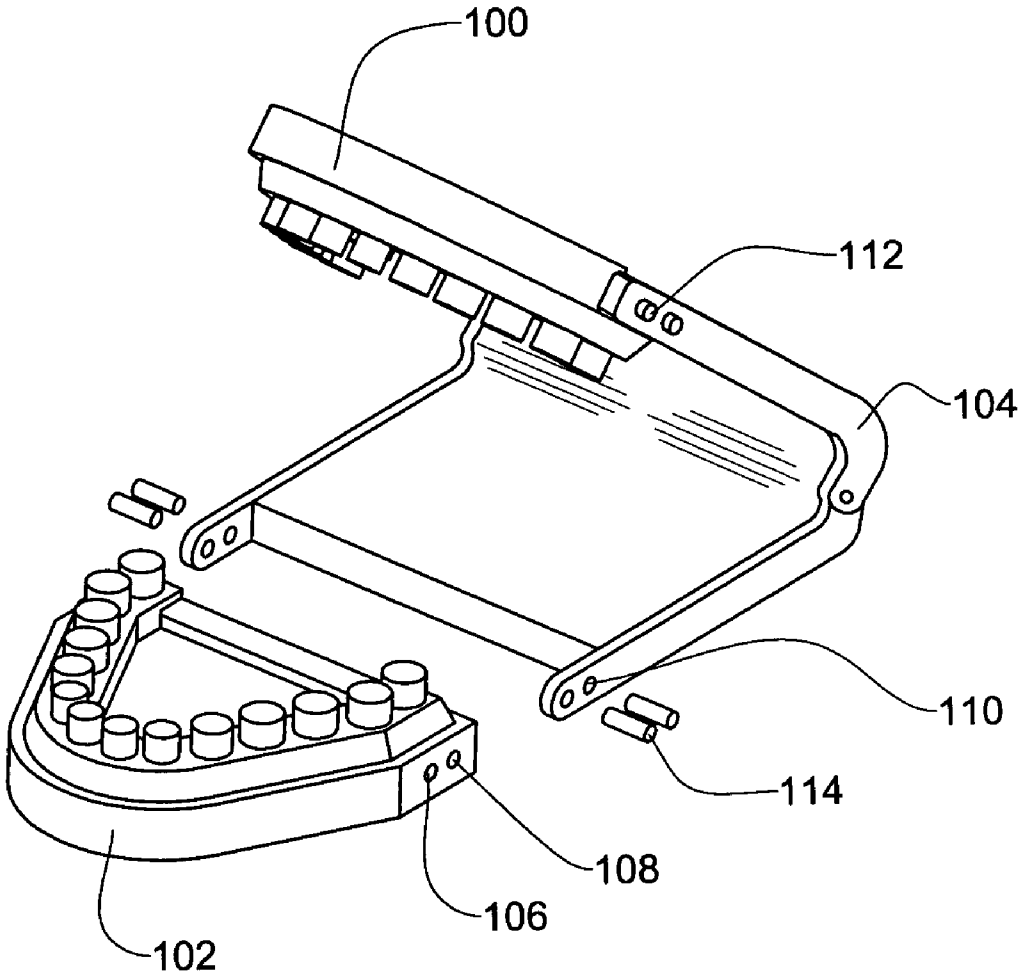

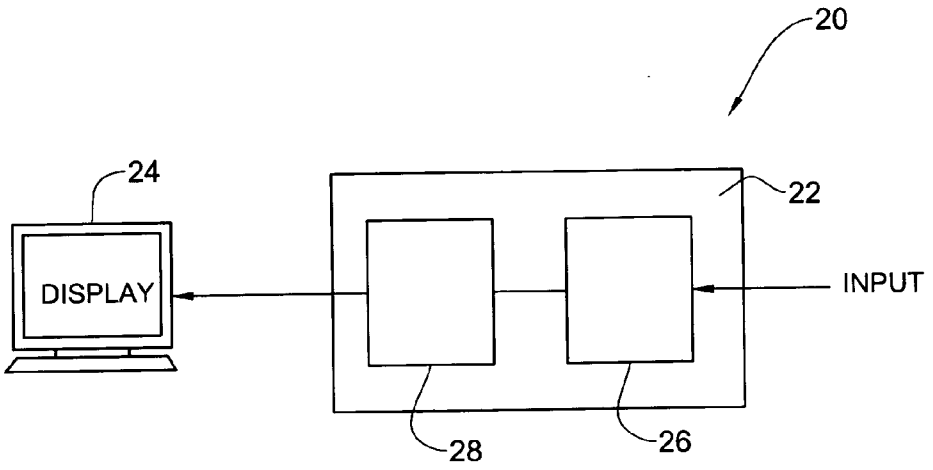

FIG. 1

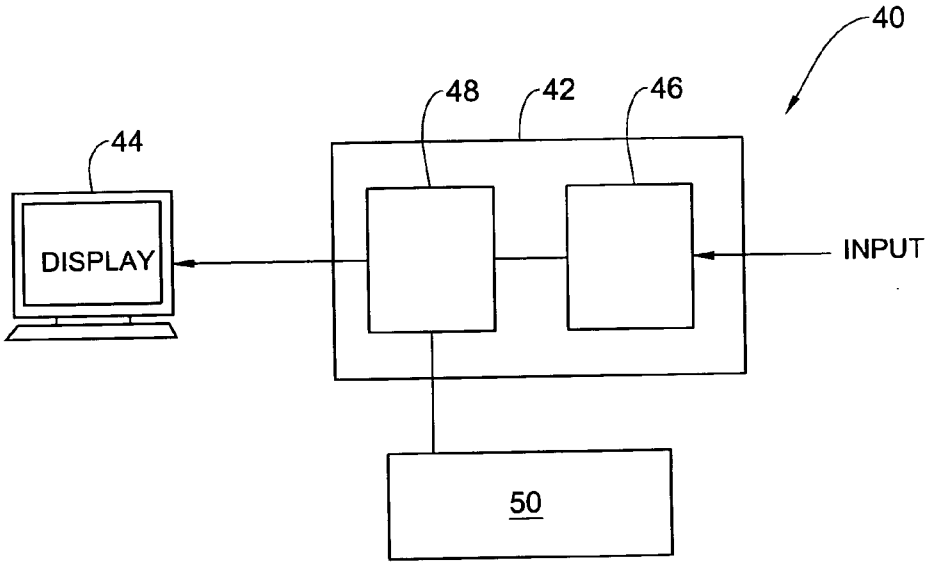

FIG. 2

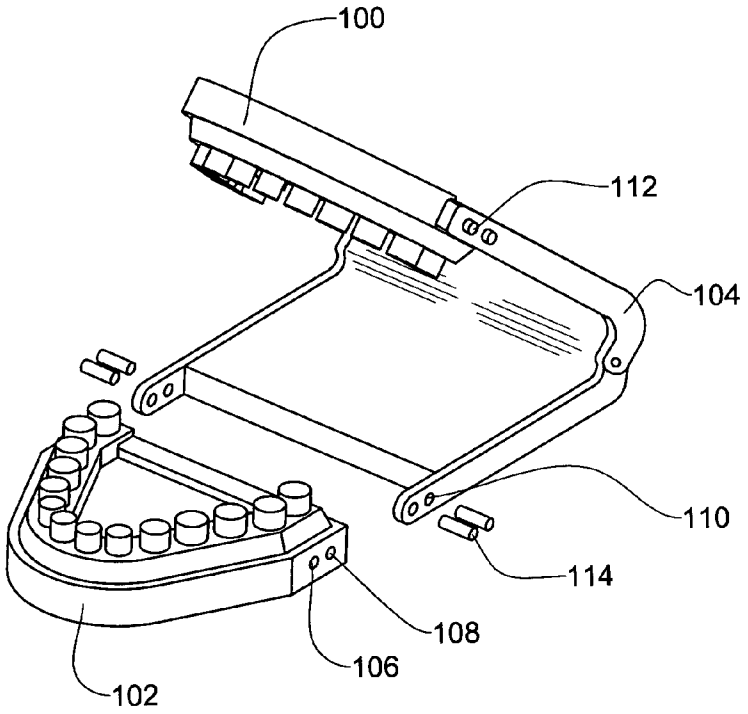

FIG. 3

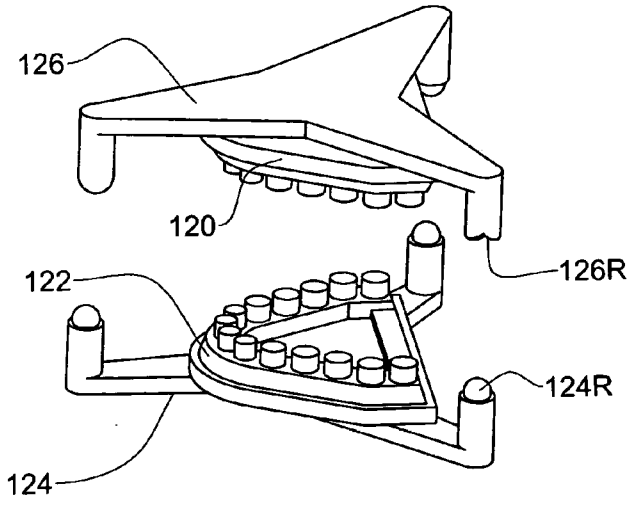

FIG. 4

METHOD FOR PREPARING A PHYSICAL PLASTER MODEL

FIELD OF THE INVENTION

[0001] This invention relates to the field of dentistry and in particular to a method of preparing plaster models for use in orthodontics, prosthodontics and other aspects of dental medicine.

BACKGROUND OF THE INVENTION

[0002] For a dentist or a dental technician, one of the main difficulties in making a working physical model of the teeth, including the inter-occlusal relationship between the jaws (also known by the term "master cast" or "working cast"), lies in respecting the position of a patient's artificial jaws when the teeth are in Centric Occlusion position. Separate molding of the upper and the lower teeth followed by the manual articulation of the two parts is a constant source of error. The precision of the cast depends on several factors, including, inter alia, the accuracy of the impressions and wax bites, the material from which the cast is constructed, and the identification of the anatomic. In addition, traditional methods using pins do not prevent linear expansion of the cast. This can result in the deformation of the new teeth that do not correspond perfectly to the original. Thus, the more precisely the working cast reproduces the anatomy of the mouth, the more accurate will be the spatial position, and the static and dynamic relationships. This provides a better possibility of producing a biomechanically acceptable restoration.

[0003] In order to reproduce with high precision the mechanical equivalent of functional and non-functional movements within the mouth, articulators (also known by the term "occluding devices") have been and still are under development. The articulators are used to precisely hold models of a patient's upper and lower teeth, so a dentist can study their bite or make a restoration.

[0004] Articulators are primarily used when a crown needs to be prepared. According to current practice, after diagnosing in a patient the need for a crown or a bridge, the dentist cuts the tooth to be reconstructed by the crown or bridge and prepares two impressions and a wax bite of the patient's jaws. One impression is of the area prepared for the crown and the surrounding area. The other impression is of the opposite jaw. A wax bite is used to record the spatial relation between the jaws at occlusion. Based on the impressions, wax bite and written instructions of the dentist, a technician prepares in a lab the corresponding plaster jaws which are trimmed and mounted on an articulator. Using the wax bites, the spatial relation between the jaws is determined. At this stage, the tooth within the preparation to be reconstructed is temporarily separated from the plaster so that the area with the anatomic information (the area defining the anatomic contour) and the finish line are exposed. The finish line is typically marked manually by the lab technician in ink on the preparation and a crown is built based on the resulting preparation. The quality of the crown prepared is examined by placing the crown on the preparation in the articulator and verifying that there is a good occlusion of the crown with the opposite teeth. If in the affirmative, the crown is sent to the dentist for placement on the preparation in the patient's mouth.

SUMMARY OF THE INVENTION

[0005] The present invention concerns a unique method of preparing a physical working teeth model of teeth, e.g. a model made of hard plaster, used for the fabrication of orthodontics and prosthodontics Crown or Bridges. The method utilizes a three dimensional (3D) virtual image of the patient's dentition or parts of it. Based on digital data representing said 3D image, a physical 3D teeth model is constructed.

[0006] The term "teeth model" will be used to denote a physical, three-dimensional representation of teeth in a solid matrix having a surface relief corresponding to the teeth arrangement of the individual. Such a model may be a "positive teeth model", comprising a teeth replica, namely, a model where each tooth is represented by a projection or bulge having contours identical in size and shape to the corresponding tooth; or a "negative teeth model", where each tooth is represented by a cavity or recess with contours identical in size, but opposite in shape to the contours of the corresponding tooth.

[0007] Thus, according to one embodiment, the invention provides a method for preparing a physical positive working model of a patient's dentition. According to another embodiment, the invention provides a method for preparing a physical negative model from which a positive working model can be fabricated, according to known dentistry procedures.

[0008] The method of the invention is of particular use in the construction of crowns or bridges. Thus, according to the invention, the 3D virtual image comprises at least the region of the teeth that includes a tooth stump on which a crown is to be fitted or a region on to which a bridge is to be fitted. Based on the virtual image of the dentition, a physical model of the two jaws is prepared. Thereafter, the resulting model, being positive or negative, as the case may be, is used for a variety of purposes, for example to prepare a crown, a bridge or other dental appliance; to analyze the relationship between the upper and lower jaws; to show the patient the crown or bridge; etc.

[0009] Alternatively, the virtual image may be further manipulated and based on the digital data representing the image, a virtual crown or bridge is constructed. Based on the virtual image of the crown or bridge, a physical model of the crown or bridge is prepared.

[0010] A virtual three-dimensional (3D) image is obtained e.g. in the manner as described in PCT publication No. WO97/03622 or PCT publication No. WO00/08415.

[0011] The dentist (or the technician, as the case may be) may construct a virtual image of the patient's dentition either with or without the virtual image of the crown or bridge, and then may send such data to the lab technician. There, a physical model may be prepared, e.g. by milling, 3D lithography or by any other appropriate means, according to said data. The physical model prepared by the technician can be sent to the dentist, for his approval (the physical model can also be fabricated at the dentist's office).

[0012] The physical model has typically one member that represents the upper jaw and another that represents the lower jaw. It order to render it easy to match these two members to one another, they may be produced with mark-

ings or appropriate physical alignment arrangement for aligning the jaws to represent the alignment of the jaws of the patient. Said data that includes the virtual image thus preferably includes also data bits for producing such markings or arrangement.

[0013] Markings may be in the form of depressions or protrusions on the face of the members that are made such so as to provide the technician with a tool for the proper alignment of the two members. A physical alignment arrangement may include a mounting arrangement for mounting the two members to an articulator to yield a proper occlusion alignment. By another example, the physical alignment arrangement may include one or more alignment reference components in one member that once fitted with one or more corresponding components in the other member, ensure proper alignment of the two members.

[0014] Thus, the present invention provides a dental articulator that precisely simulates the occlusion relationship of the jaws as well as the three-dimensional movement of a human jaw.

BRIEF DESCRIPTION OF THE DRAWINGS

[0015] In order to understand the invention and to see how it may be carried out in practice, a preferred embodiment will now be described, by way of non-limiting example only, with reference to the accompanying drawings, in which:

[0016] **FIG. 1** shows, by way of a block diagram, a computerized device for constructing a virtual impression of the patient's dentition.

[0017] **FIG. 2** shows, by way of a block diagram, a computerized device for milling a plaster model, based on the information from the virtual impression, in accordance with an embodiment of the invention.

[0018] **FIG. 3** shows a perspective view of the plaster model arranged on an articulator.

[0019] **FIG. 4** shows a perspective view of the plaster model with references for aligning the jaws;

[0020] **FIG. 5** shows, by way of a flow chart, a method for fabricating a physical teeth model, in accordance with an embodiment of the invention;

[0021] **FIG. 6** and **FIG. 7** illustrate two specific examples, respectively, of the method of **FIG. 5**.

DETAILED DESCRIPTION OF THE INVENTION

[0022] As is true in any method of making a physical model, e.g. a plaster model of a patient's dentition, it is most important to start with an accurate representation of the jaws and teeth and the inter-occlusal relationship between the jaws. For this purpose, the instant invention relies on a virtual model of the patient's dentition.

[0023] Digital data representing a virtual teeth model may be obtained by a variety of methods, such as that described in PCT Application No. PCT/IL96/00036 (publication No. WO97/03622) and in PCT Application No. PCT/IL99/00431 (publication No. WO00/08415). The virtual three-dimensional image may be manipulated, for example, in a manner described in PCT Application No. PCT/IL99/00577 (publication No. WO00/25677). In particular, the virtual three-dimensional (3D) image is obtained by utilizing a physical negative teeth model, e.g. a negative teeth model that comprises the teeth impression by means of an impression matrix. The physical negative teeth model may be used as such, thus providing digital negative representation of the patient's dentition, from which a digital positive representation of the patient's dentition may be digitally obtained. Alternatively, the physical negative teeth model may be used to prepare a physical positive teeth model, from which a digital positive teeth representation is provided.

[0024] After the virtual image is generated, the display is typically a computerized display, provided with software permitting the technician to visualize the virtual image from different angles. As will be appreciated, the invention is not limited to any specific display means and any means for presenting the image such as, for example, in a printed format, on a computer display screen, etc., may be employed in accordance with the invention.

[0025] In most situations, the dentist will take three virtual impressions. One impression is of the preparation area for the crown, bridge or other dental appliances, along with the surrounding teeth. Another impression is of the teeth on the opposite jaw. The third impression records the spatial relationship between and the spacing of the two jaws in a centric occlusion. This information from the virtual impressions is placed in a 3D file that contains the two jaws and the spatial relationship between them in occlusion. Thereafter, the 3D file may be transferred to the laboratory.

[0026] Reference is made to **FIG. 1** showing a computerized device generally designated **20** including a processor **22** and a display unit **24**. Running in the processor **22** is a first software utility **26** that receives an input of a three dimensional virtual teeth model and then processes, automatically or through the user, manipulable software utility **28**, to construct a three dimensional virtual teeth model that includes the region that is to be treated, which can then be fed for display to display unit **24**. By this means, the virtual impression of the dentition is made and the information may then be stored. The technician may then simulate any treatment area on the computer. For example, the cutout in the tooth for the crown can be simulated, along with fitting of the crown.

[0027] Reference is now being made to **FIG. 2** showing a system generally designated **40**. In **FIG. 2**, like components to those shown in **FIG. 1**, are given the same reference numerals shifted by **20** (namely component **42**, for example, is functionally identical to component **22** in **FIG. 1**). System **40** of **FIG. 2** includes an apparatus **50** that is used to construct a physical model utilizing digital data received from software utility **48**. For this purpose, a Computer Numerical Control (CNC) milling machine **50** may be used. However, the invention is not limited to the use of a CNC machine and any other CAM (Computer Aided Manufacturing) technology that can produce a physical model out of virtual data may be used.

[0028] To manufacture a crown, a bridge, or any dental appliance, the lab technician requires two physical jaws models mounted on an articulator or placed in the correct spatial orientation one against the other. According to this method, the information for the two jaws and their spatial relationship in occlusion is in a digital 3D file. Alternatively, or in addition, the proper occlusion may be determined in a

manner disclosed in WO 98/52493. The computer guided milling (or other technology) machine is connected to the computer with the 3D file of the virtual impression, and then a physical model of each one of the jaws is milled from a blank made of plaster, or other appropriate material taking into consideration also the spatial relation between the two jaws and their occlusion. At this point, the technician has his necessary physical model and can proceed with making the crown or the bridge.

[**0029**] Based on information from the virtual 3D image, the dentist or a technician may generate a 3D model of a crown to be fitted on a tooth stump or of a bridge to be fitted on the tooth surface, to generate a digital file on which basis the lab technician, through the use of a computer driven milling machine, may generate a physical crown, bridge or other dental appliances.

[**0030**] It should be noted that the physical model generated by device **40** might be a positive model or alternatively, a negative model. **FIG. 3** shows plaster cast members **100** and **102** fabricated according to the invention and representing the upper and lower jaws, respectively. The members **100** and **102** can be mounted on an articulator **104** to simulate the proper occlusion relation. For that both members have articulator engagement portions **106** with reference holes **108** that can be registered with holes **110** engagement bit **112** of articulator **104**, which engagement is through pins **114**. The engagement portion **106** with the reference holes **108**, are initially defined in the virtual 3D image. In this model the proper inter-jaw occlusion are first defined, as explained above, and after the proper inter-jaw occlusion is determined, the virtual 3D model may be virtually combined with an articulator to define the articulator-engagement portion with its reference holes. This is then included in the digital file used to produce the plaster model. The reference holes may be produced automatically by the milling machine. However, the reference holes may be difficult to produce by the milling machine and may need to be produced after milling, as a separate step, for example, based on markings produced automatically during the milling procedure.

[**0031**] Reference is now made to **FIG. 4** that shows another embodiment of a manner for proper alignment of the two cast members. The two cast members **120** and **122** are produced each with a corresponding aligning structures **124** and **126**. Each of these aligning structures includes positioning reference components **124**R and **126**R, respectively, the former having an end abutment, that fits into a matching recess in the latter. This alignment structure is first produced virtually after virtual alignment of the two jaw members and thereafter structures **124** and **126** may then be added. The data file prepared from the virtual model and that is utilized for manufacture of the physical members **120** and **122**, this includes, according to this embodiment, also data for integral production of said structures.

[**0032**] As may be appreciated, the lab technician has to build a crown, a bridge, or other dental appliances, that will have a good fit on the prepared area of the tooth. Contact with the surrounding teeth must be good, and such as in the case of crowns, there must also be correct contact with teeth on the opposing jaw. If the crown does not fit correctly, the bite will be affected and the crown will not fit comfortably in the mouth. The articulator is used to mount the model, so the crown and be formed and properly fitted. This is why the model must be highly accurate, or the crown will not fit correctly in the patient's mouth. It is from this information that an accurate 3D file of the dentition is created, and the milling of the plaster physical mold is based on the information in this 3D file. Due to the enhanced accuracy of the information about the dentition, the physical model can be made more accurately, thereby leading to a more accurate manufacture of the crown.

[**0033**] Reference is now being made to **FIG. 5**, and the reader is referred to **FIG. 2** for a complete understanding of their function. Illustrated in **FIG. 5** are the main steps **100** in a method of the invention for the fabrication of a physical teeth model utilizing the device **40** and a CAM machine (CNC milling machine **50**, in this example) connectable to the device **40**, as shown in **FIG. 2**.

[**0034**] At step **125**, the device **40** receives an input of a 3D virtual teeth model (constituting a 3D representation of a patient's dentition), and based on which, generates, at **140**, digital information for the fabrication of a physical teeth model. Then at step **160**, the machine **50** fabricates the physical teeth model.

[**0035**] It should be noted that additional steps might be needed and carried out manually or automatically, e.g., for the generation of additional digital information, which can be displayed by the display utility **24**, as previously explained. It should also be noted that the machine **50** does not need to be part of the device **40** and can be a separate utility. In the later case, the digital information generated by the device **40** is transmitted to the machine **50** via a direct connection (through wires or wireless communication means) or via a communication network (e.g. the Internet).

[**0036**] According to the common CAD techniques, soft materials such as wax may be used for the fabrication of the physical model. However, the fabricated physical model made of such relative soft materials is easily deformable by mechanical stresses. This outcome is highly undesirable in the context of dentistry, in which a positive working model is used, for example for the creation of orthodontic or prosthodontics appliances. Any deformation in the fabricated positive model degrades the precision of the appliance based on the positive model, as well as degrades the quality of the orthodontics and prosthodontics treatment.

[**0037**] The present invention, by one of its embodiment, solves the above problem by providing a method for the fabrication of a precise negative model, from which a positive working model can then be produced, for example from a hard plaster, by utilizing traditional dentistry procedures.

[**0038**] **FIG. 6** and **FIG. 7** more specifically illustrate flow diagrams **200** and **300** (respectively) for the fabrication of a negative teeth model utilizing the method of **FIG. 5**. In the example of **FIG. 6**, the device **40** receives an input of a 3D virtual positive teeth model (step **220**), and generates digital information for the fabrication of a physical negative teeth model (step **240**). The machine **50**, being a part of or connectable to the device **40**, operates to fabricate the physical negative teeth model (step **260**). At a later stage (not shown), the fabricated physical negative teeth model is used for the fabrication of a positive working model, according to known procedures, e.g. by filling the negative cast with a hard plaster and removing the negative cast.

[0039] In the example of **FIG. 7**, the device **40** receives an input of a 3D virtual negative teeth model (step **320**). The processing of this data for the generation of the digital information for the fabrication of the physical negative teeth model (at step **340**) might not need the generation of a digital positive model. However, an additional step (not shown) can be carried out between steps **320** and **340**, in which a digital positive model, from which the information is derived, is generated.

[0040] As mentioned above, the fabricated physical model can bear marking or articulator engagement portions, for proper relations. When a negative model is fabricated, it bears a negative marking and/or engagement portions (e.g. depressions), thus providing the positive working model with positive marking and/or engagement portions (e.g. corresponding protrusions).

[0041] It should be noted that a dedicated device could implement the procedures **100**, **200** and **300**. Alternatively, these procedures can be integrated with other computerized dentistry methods, e.g. virtual treatment plan and the like.

[0042] While some preferred embodiments have been shown and illustrated, it is to be understood by a skilled person that it is not intended thereby to limit the disclosure, but rather it is intended to cover all modifications and arrangements falling within the spirit and scope of the present invention.

1. A method for creating a physical teeth model comprising: providing a virtual three dimensional (3D) representation of a patient's dentition that comprises at least a region of the teeth that includes a tooth stump on which a crown is to be fitted or a region on to which a bridge is to be fitted; and preparing a physical model of the jaws of a subject from a blank, based on information from said virtual 3D image.

2. A method according to claim 1, wherein a computer driven machine prepares said physical model.

3. A method according to claim 1, wherein said model is a plaster model.

4. A method according to claim 1, comprising, based on information from said virtual 3D image, generating a 3D model of a crown to be fitted on said tooth stump.

5. A method according to claim 4, wherein a computer driven milling machine prepares a physical crown based on the 3D image of the crown.

6. A method according to claim 3, wherein said model is a positive teeth model.

7. A method according to claim 3, wherein said model is a negative teeth model.

8. A method for making a model for fabricating a dental crown, a dental brigdeor the like, comprising the steps of: making a virtual 3D model of a patient's dentition; creating a 3D data file of said patient's jaws and of the spatial relationship between said jaws in occlusion, based on information from said virtual 3D model; and making said model of said patient's dentition, based on information in said 3D data file.

9. A method for making a model according to claim 8, wherein a computer driven milling machine makes said model from a plaster blank.

10. A method for making a model according to claim 8 or 9, further comprising: locating the jaws of the model in proper occlusion relation; milling an area on the model corresponding to an area where said dental crown is to be mounted; fabricating said dental crown; and fitting said dental crown on said model.

11. A method for making a model according to any one of claim 8, further comprising, based on said 3D data file, generating a digital data representing the three dimensional structure of the virtual crown; and employing said digital data to construct a virtual crown for fitting on a tooth stump.

12. A method for making a model according to claim 10, wherein a computer driven milling machine makes a physical model of at least a region of the teeth that includes a tooth stump on which a crown is to be fitted and a physical model of the crown to be fitted on said tooth stump.

13. A method according to claim 1, wherein said physical model is a positive model comprises two members, one representing the upper jaw and the other the lower jaw, both members are produced with markings to provide the technician with clues for proper alignment of the two members.

14. A method according to claim 1, wherein said physical model is a negative model from which a positive working model can be produce, said negative model comprises two members, one representing the upper jaw and the other the lower jaw, both members are produced with markings to provide the technician with clues for proper alignment of the corresponding two members of said positive working model.

15. A method according to claim 1, wherein said physical model is a positive model comprises two members, one representing the upper jaw and the other the lower jaw, both members are produced with an alignment arrangement to permit proper occlusion alignment of the two members.

16. A method according to claim 15, wherein the alignment arrangement includes a mounting arrangement for mounting said members on an articulator.

17. A method according to claim 15, wherein the alignment arrangement includes one or more alignment reference components in each of said members, said components in the two members corresponding to one another with each component in one of said members fits with the corresponding component in the other of said members to yield proper alignment of the two members.

18. A method according to claim 1, wherein said physical model is a negative model from which a positive working model can be produce, said negative model comprises two members, one representing the upper jaw and the other the lower jaw, both members are produced with an alignment arrangement to permit proper occlusion alignment of the two members of said positive working model.

19. A method according to claim 18, wherein the alignment arrangement of the negative model includes a mounting arrangement for mounting said members of the positive working model on an articulator.

20. A method according to claim 18, wherein the alignment arrangement of said negative model includes one or more alignment reference components for the creation of respective alignment reference components in each of the members of the positive working model, the components in the two members of the positive model corresponding to one another such that each component in one of said members fits with the corresponding component in the other of said members to yield proper alignment of the two members.

21. A method for creating a physical teeth model comprising: providing a virtual three dimensional (3D) representation of a patient's dentition that comprises at least a region of the teeth that includes a tooth stump on which a crown is to be fitted or a region on to which a bridge is to be fitted; generating a digital information for the fabrication of a physical teeth model; and preparing a physical model of the jaws of a subject from a blank, based on information from said virtual 3D image.

22. A method according to claim 21, wherein said physical teeth model is a positive model.

23. A method according to claim 21, wherein said physical teeth model is a negative model from which a positive working model can be fabricated.

24. A method according to claim 23, wherein said virtual three dimensional (3D) representation of a patient's dentition is a positive representation.

25. A method according to claim 23, wherein said virtual three dimensional (3D) representation of a patient's dentition is a negative representation.

26. A method according to claim 5, wherein said model is a positive teeth model.

27. A method according to claim 5, wherein said model is a negative teeth model.

* * * * *