US010219875B1

(12) **United States Patent**
Kopelman et al.

(10) **Patent No.: US 10,219,875 B1**
(45) **Date of Patent: Mar. 5, 2019**

(54) **SELECTION AND LOCKING OF INTRAORAL IMAGES**

(71) Applicant: **Align Technology, Inc.**, San Jose, CA (US)

(72) Inventors: **Avi Kopelman**, Palo Alto, CA (US); **Michael Sabina**, Campbell, CA (US)

(73) Assignee: **Align Technology, Inc.**, San Jose, CA (US)

(*) Notice: Subject to any disclaimer, the term of this patent is extended or adjusted under 35 U.S.C. 154(b) by 0 days.

(21) Appl. No.: **16/204,632**

(22) Filed: **Nov. 29, 2018**

Related U.S. Application Data

(63) Continuation of application No. 15/993,504, filed on May 30, 2018, which is a continuation of application
(Continued)

(51) **Int. Cl.**

A61B 6/00	(2006.01)
A61C 5/77	(2017.01)
G06T 7/13	(2017.01)
G06T 17/00	(2006.01)
A61B 1/00	(2006.01)

(Continued)

(52) **U.S. Cl.**
CPC ***A61C 5/77*** (2017.02); ***A61B 1/0002*** (2013.01); ***A61B 1/00009*** (2013.01); ***A61B 1/00039*** (2013.01); ***A61B 1/00045*** (2013.01); ***A61B 1/24*** (2013.01); ***A61C 9/0053*** (2013.01); ***G06T 1/0007*** (2013.01); ***G06T 7/13*** (2017.01);
(Continued)

(58) **Field of Classification Search**
CPC A61B 6/00; A61C 13/00
USPC 382/154
See application file for complete search history.

(56) **References Cited**

U.S. PATENT DOCUMENTS

6,075,905 A	6/2000	Herman et al.
6,263,234 B1	7/2001	Engelhardt et al.

(Continued)

FOREIGN PATENT DOCUMENTS

CN	103079494	5/2013
JP	2014-521163	5/2014

(Continued)

OTHER PUBLICATIONS

Gao, J. et al. "3D finite element mesh generation of complicated tooth model based on CT slices,"Computer Methods and Programs in Biomedicine, Feb. 9, 2060, pp. 97-105, Elsevier.

(Continued)

Primary Examiner — Abolfazl Tabatabai
(74) *Attorney, Agent, or Firm* — Lowenstein Sandler LLP

(57) **ABSTRACT**

A method includes receiving first scan data of an intraoral site and generating a three-dimensional (3D) model comprising the intraoral site. A user selection of a portion of the 3D model is received, and the portion of the 3D model is locked. After locking the portion of the 3D model, second scan data of the intraoral site is received. The 3D model is then updated with the second scan data, wherein a first portion of the second scan data that also depicts the locked portion of the 3D model is not used for updating the 3D model, and wherein a second portion of the second scan data is used for updating the 3D model, the second portion of the second scan data being combined with the first scan data to account for discrepancies of overlapping data between the first scan data and the second scan data.

20 Claims, 11 Drawing Sheets

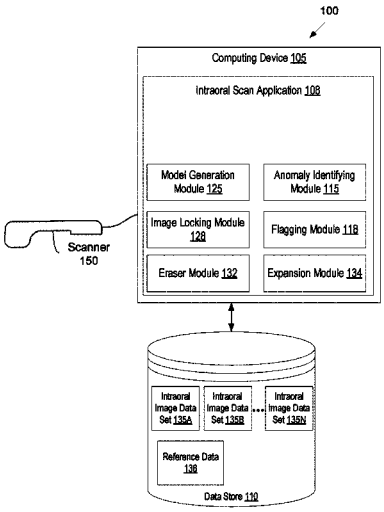

Related U.S. Application Data

No. 15/222,525, filed on Jul. 28, 2016, now Pat. No. 10,004,572, which is a continuation of application No. 14/640,909, filed on Mar. 6, 2015, now Pat. No. 9,451,873.

(51) **Int. Cl.**

A61C 9/00	(2006.01)
G06T 15/20	(2011.01)
G06T 1/00	(2006.01)
A61B 1/24	(2006.01)
A61C 13/00	(2006.01)

(52) **U.S. Cl.**

CPC ***G06T 15/205*** (2013.01); ***G06T 17/00*** (2013.01); *G06T 2207/30036* (2013.01)

(56) **References Cited**

U.S. PATENT DOCUMENTS

6,882,894	B2	4/2005	Durbin et al.	
7,098,435	B2	8/2006	Mueller et al.	
7,112,065	B2 *	9/2006	Kopelman	A61C 13/0004 433/213
7,488,174	B2	2/2009	Kopelman et al.	
7,555,403	B2	6/2009	Kopelman et al.	
7,590,462	B2	9/2009	Rubbert et al.	
7,600,999	B2 *	10/2009	Knopp	A61C 7/146 433/24
7,658,610	B2	2/2010	Knopp	
7,695,278	B2	4/2010	Sporbert et al.	
7,796,811	B2	9/2010	Orth et al.	
7,844,092	B2	11/2010	Crucs	
7,865,259	B2	1/2011	Kuo et al.	
7,912,257	B2	3/2011	Paley et al.	
7,916,911	B2	3/2011	Kaza et al.	
8,275,180	B2	9/2012	Kuo	
8,334,894	B2	12/2012	Pfeiffer et al.	
8,454,365	B2	6/2013	Boerjes et al.	
8,520,925	B2	8/2013	Duret	
9,336,336	B2	5/2016	Deichmann et al.	
9,451,873	B1	9/2016	Kopelman et al.	
9,629,551	B2	4/2017	Fisker et al.	
10,004,572	B2	6/2018	Kopelman et al.	
2006/0275737	A1	12/2006	Kopelman et al.	
2007/0015111	A1	1/2007	Kopelman et al.	
2007/0172112	A1	7/2007	Paley et al.	
2007/0236494	A1	10/2007	Kriveshko	
2008/0206705	A1	8/2008	Kaza et al.	
2009/0068617	A1	3/2009	Lauren	
2010/0303341	A1	12/2010	Hausler	
2012/0015316	A1	1/2012	Sachdeva et al.	
2013/0110469	A1	5/2013	Kopelman	
2014/0227655	A1	8/2014	Andreiko et al.	
2014/0247260	A1	9/2014	Ghoneima et al.	
2014/0272774	A1	9/2014	Dillon et al.	
2014/0335470	A1	11/2014	Fisker et al.	
2015/0017598	A1	1/2015	Wu et al.	

FOREIGN PATENT DOCUMENTS

WO	97/03622	2/1997
WO	2012/011101	1/2012

OTHER PUBLICATIONS

Rengier, F. et al. "3D printing based on imaging data: review of medical applications," International Journal of Computer Assisted Radiology and Surgery. May 15, 2010, pp. 335-341, Springer.

Hassan, B. et al. "Influence of scanning and reconstruction parameters on quality of three-dimensional surface models of the dental arches from cone beam computed tomography." Clinical Oral Investigations, Jun. 9, 2009, pp. 303-310, vol. 14:3, Springer.

Rad, A. et al. "Evaluation of Current Dental Radiographs Segmentation Approaches in Computer-aided Application," ETE Technical Review, May-Jun. 2013, pp. 210-222, vol. 30, issue 3.

Gao, H. et al. "Automatic Tooth Region Separation for Dental CT Images," Third 2008 International Conference on Convergence and Hybrid Information Technology, Nov. 2008, pp. 897-901, IEEE.

Jianxin, et al., "3D finite element mesh generation of complicated tooth model based on CT slices," Computer methods and programs in biomedicine vol. 82.2 (2006).

"Using shade measurement with your TRIOS intraoral scanner," 3Shape A/S, Denmark, 5 pages, downloaded from htpps://www.3shape.com/knowledge-center/news-and-press/news/2014/using-shade-measurement on Nov. 29, 2017.

"3Shape Trios® User Manual" 3Shape A/S, 77 pages, downloaded from www.3shape.com/knowledge-center/user-manuals on May 12, 2016.

International Search Report and Written Opinon of the International Searching Authority for PCT Application No. PCT/IB2016/051226 dated Jul. 5, 2016.

European Patent Office Communication Pursuant to Article 94(3) for European Patent Application No. 16709152.9 dated Jul. 26, 2018, 9 pages.

Japan Office Action for Japanese Patent Application No. JP 2017-546765 dated Aug. 14, 2018, with English translation, 7 pages.

Korean Intellectual Property Office Notice of Preliminary Rejection for Korean Patnet Application No. 10-2017-7027851 dated Sep. 17, 2018, with English translation, 30 pgs.

Chinese Patent Office, 1st Office Action for Chineese Patent Application No. 201680014230 dated Oct. 29, 2018, 9 pages.

Chinese Patent Office, Search Report for Chineese Patent Application No. 201680014230 dated Oct. 19, 2018, 1 page.

Canadian Intellectual Property Office, Office Action for Canadian Patent Application No. 2978681 dated Oct. 3, 2018, 4 pages.

* cited by examiner

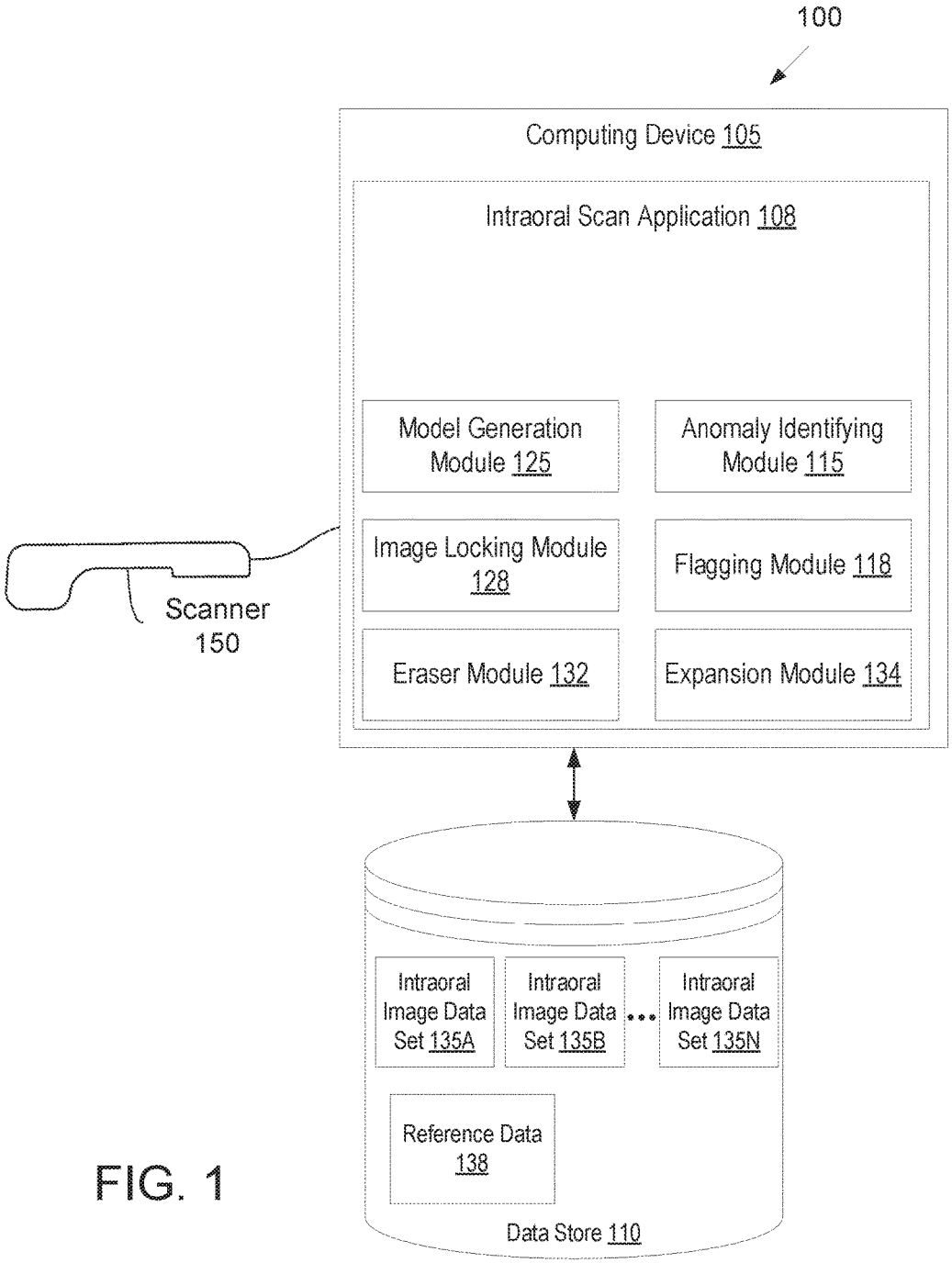
100
Computing Device 105
Intraoral Scan Application 108
Model Generation Module 125
Anomaly Identifying Module 115
Image Locking Module 128
Flagging Module 118
Eraser Module 132
Expansion Module 134
Scanner 150
Intraoral Image Data Set 135A
Intraoral Image Data Set 135B
...
Intraoral Image Data Set 135N
Reference Data 138
Data Store 110

FIG. 1

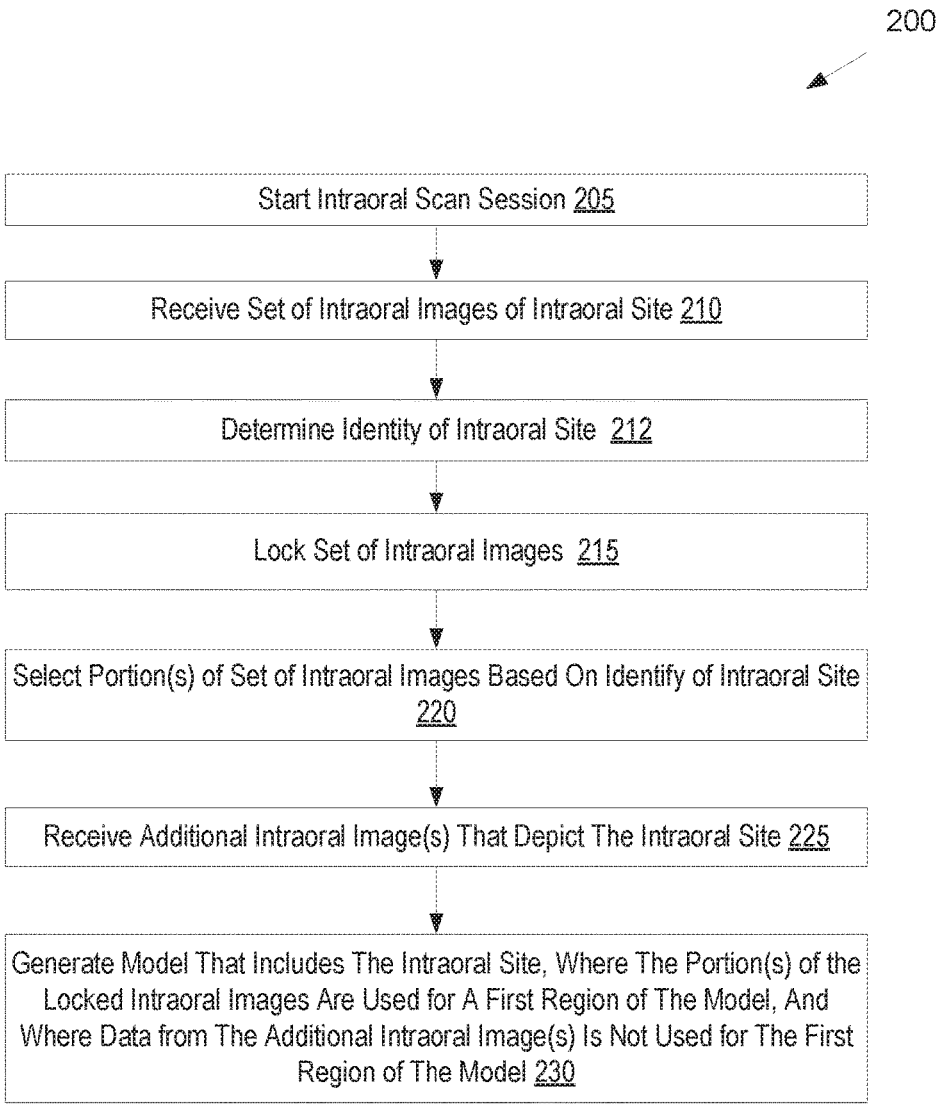
200
Start Intraoral Scan Session 205
Receive Set of Intraoral Images of Intraoral Site 210
Determine Identity of Intraoral Site 212
Lock Set of Intraoral Images 215
Select Portion(s) of Set of Intraoral Images Based On Identify of Intraoral Site 220
Receive Additional Intraoral Image(s) That Depict The Intraoral Site 225
Generate Model That Includes The Intraoral Site, Where The Portion(s) of the Locked Intraoral Images Are Used for A First Region of The Model, And Where Data from The Additional Intraoral Image(s) Is Not Used for The First Region of The Model 230

FIG. 2

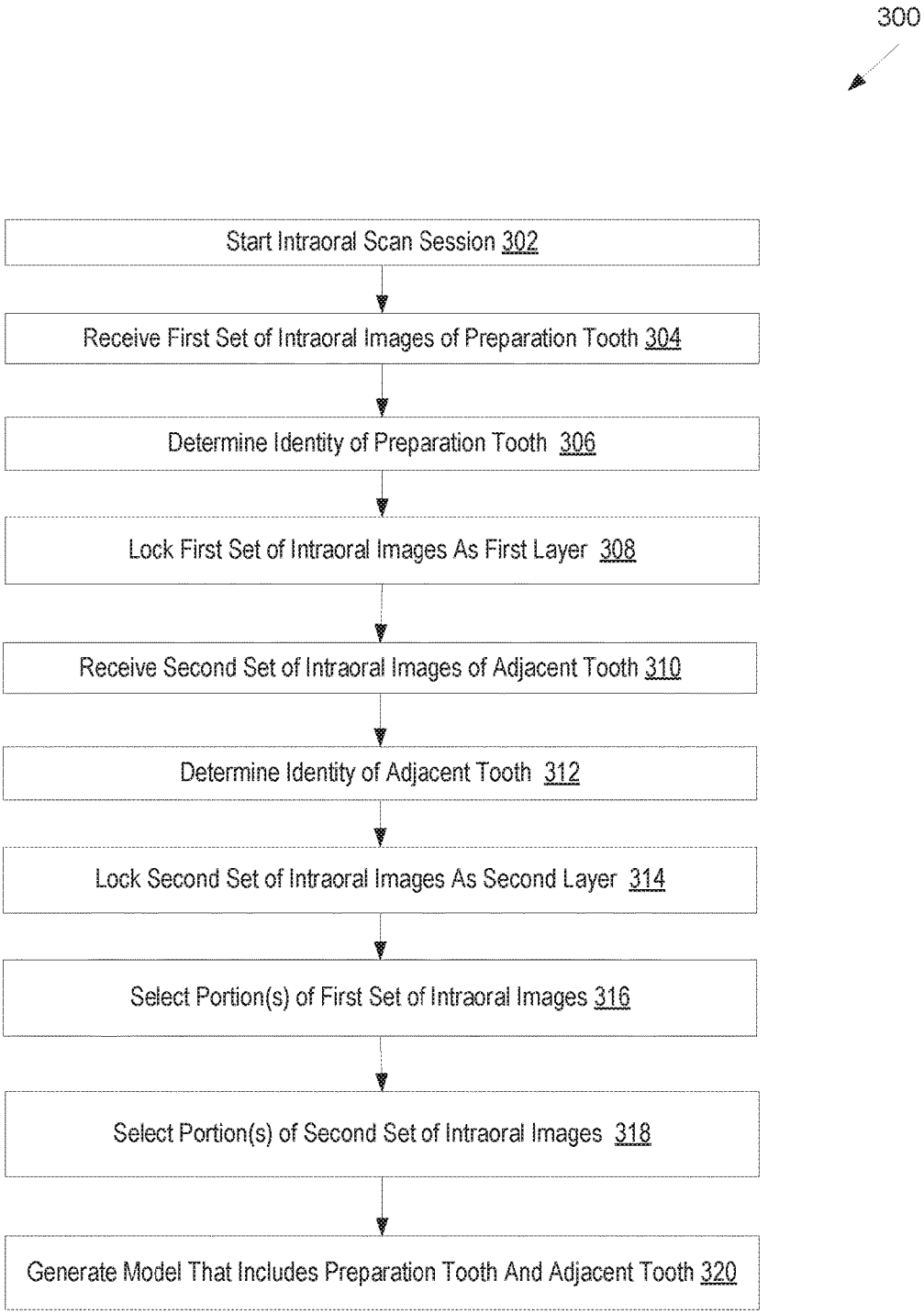
300
Start Intraoral Scan Session 302
Receive First Set of Intraoral Images of Preparation Tooth 304
Determine Identity of Preparation Tooth 306
Lock First Set of Intraoral Images As First Layer 308
Receive Second Set of Intraoral Images of Adjacent Tooth 310
Determine Identity of Adjacent Tooth 312
Lock Second Set of Intraoral Images As Second Layer 314
Select Portion(s) of First Set of Intraoral Images 316
Select Portion(s) of Second Set of Intraoral Images 318
Generate Model That Includes Preparation Tooth And Adjacent Tooth 320

FIG. 3

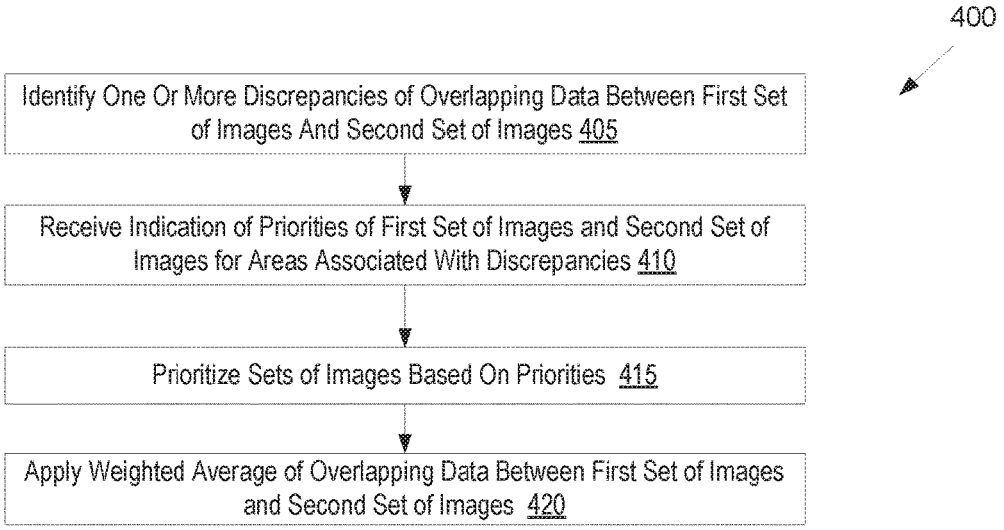
400
Identify One Or More Discrepancies of Overlapping Data Between First Set of Images And Second Set of Images 405
Receive Indication of Priorities of First Set of Images and Second Set of Images for Areas Associated With Discrepancies 410
Prioritize Sets of Images Based On Priorities 415
Apply Weighted Average of Overlapping Data Between First Set of Images and Second Set of Images 420

FIG. 4

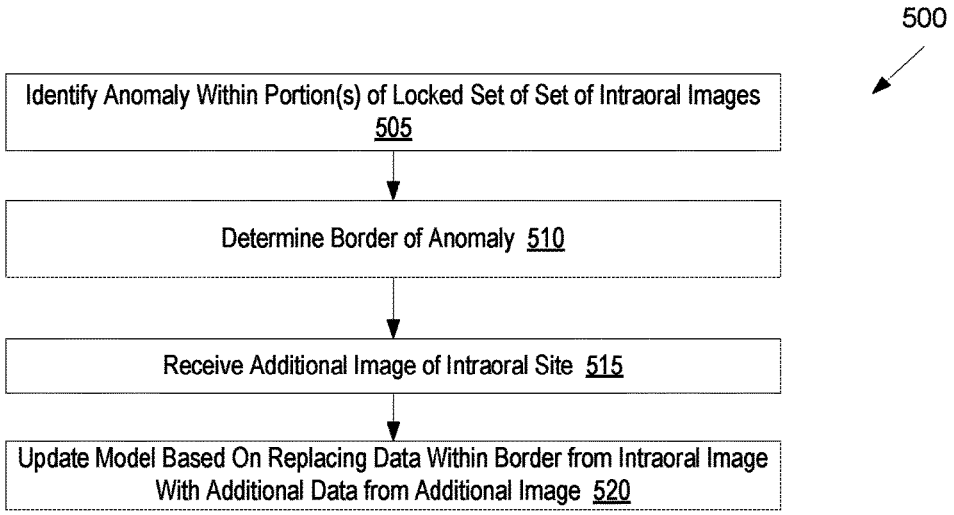
500
Identify Anomaly Within Portion(s) of Locked Set of Set of Intraoral Images 505
Determine Border of Anomaly 510
Receive Additional Image of Intraoral Site 515
Update Model Based On Replacing Data Within Border from Intraoral Image With Additional Data from Additional Image 520

FIG. 5

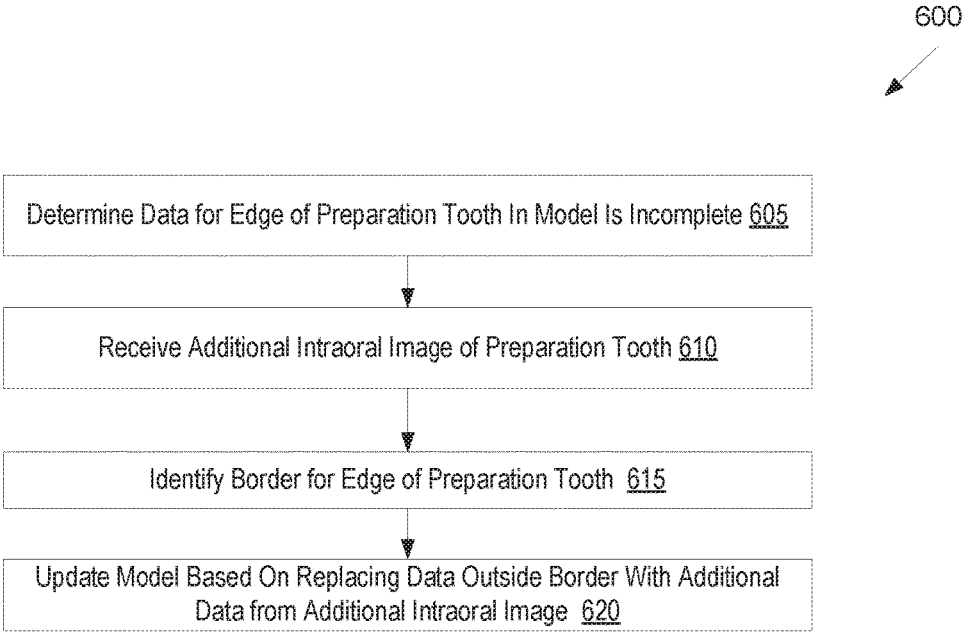
600
Determine Data for Edge of Preparation Tooth In Model Is Incomplete 605
Receive Additional Intraoral Image of Preparation Tooth 610
Identify Border for Edge of Preparation Tooth 615
Update Model Based On Replacing Data Outside Border With Additional Data from Additional Intraoral Image 620

FIG. 6

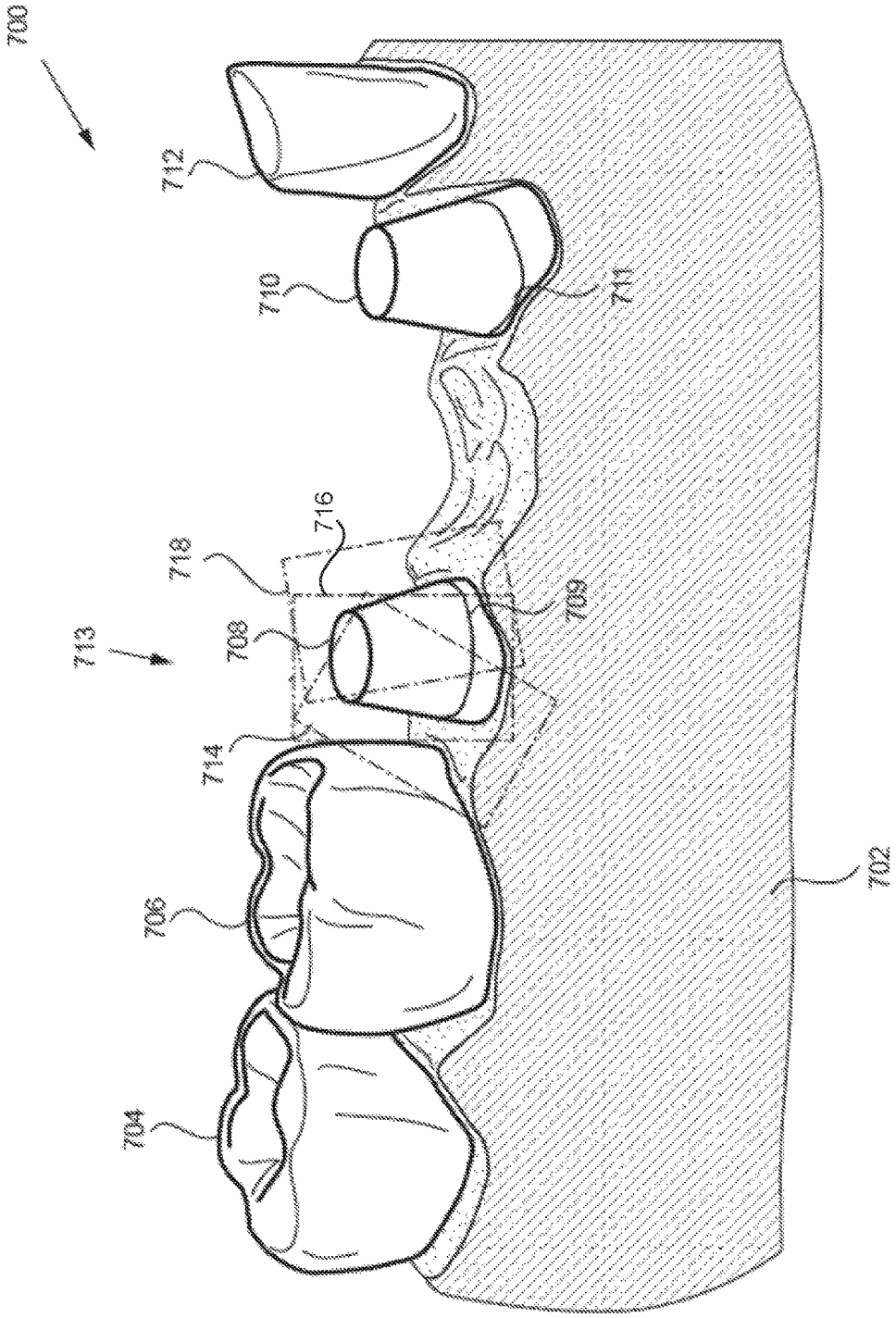

FIG. 7A

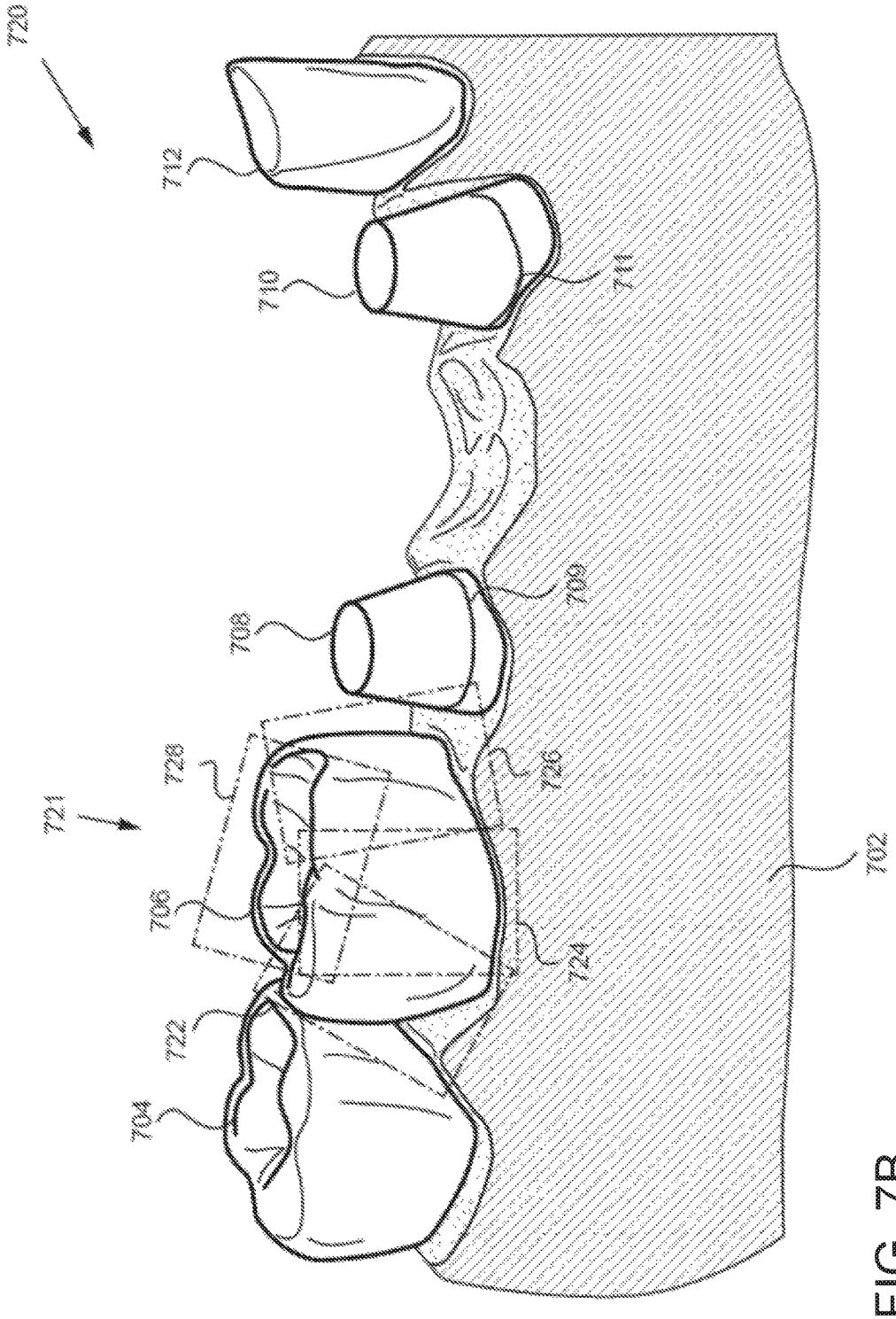

FIG. 7B

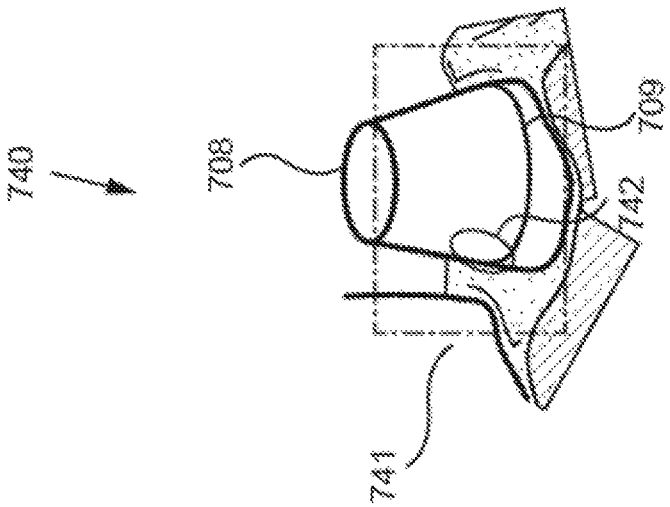

FIG. 7D

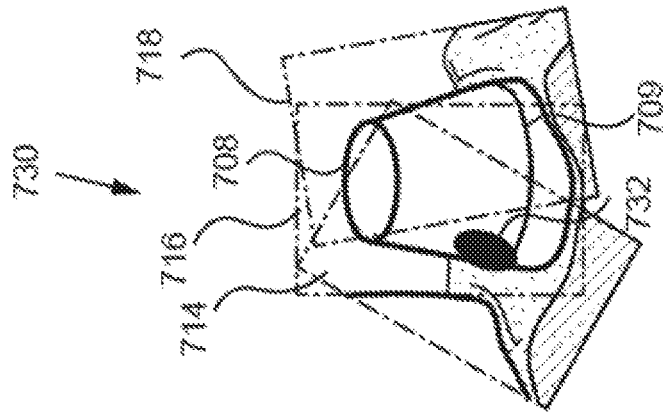

FIG. 7C

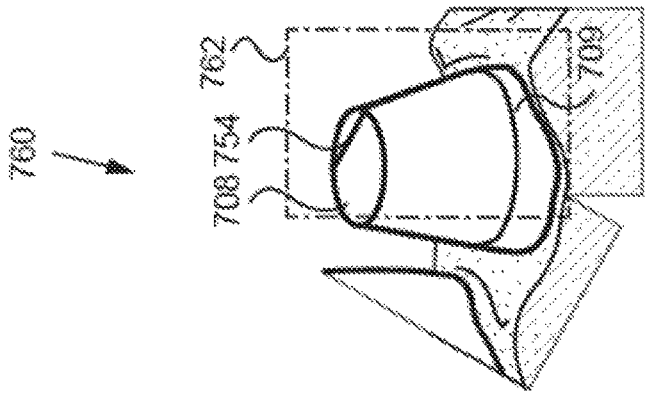

FIG. 7F

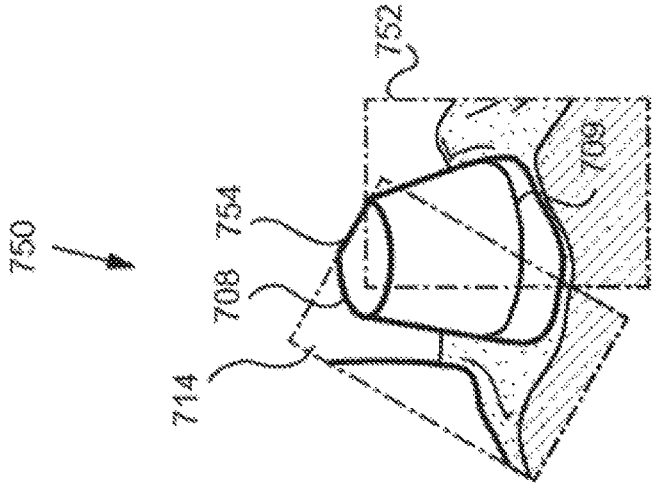

FIG. 7E

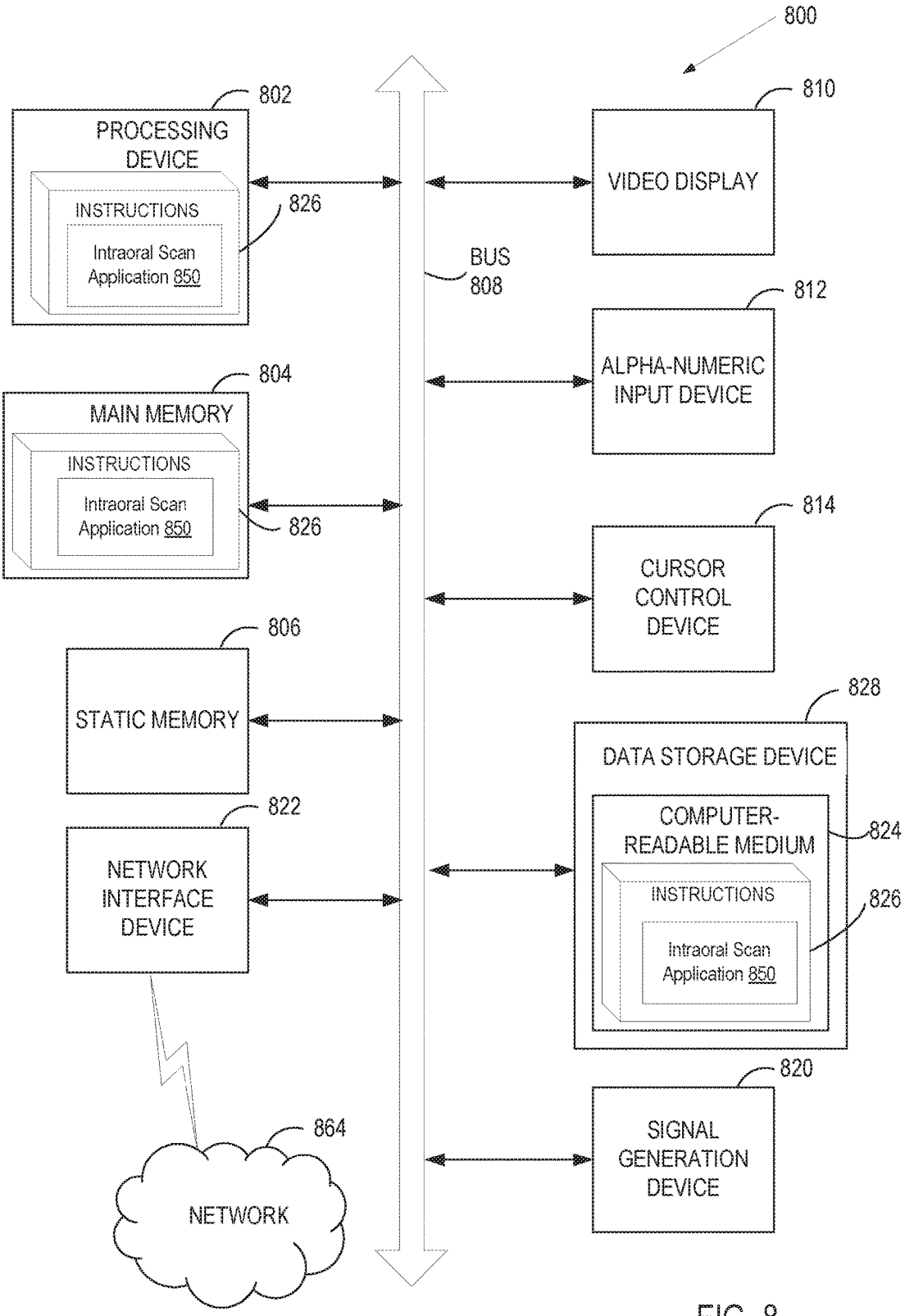
800
802
PROCESSING DEVICE
INSTRUCTIONS
Intraoral Scan Application 850
826
BUS 808
810
VIDEO DISPLAY
812
ALPHA-NUMERIC INPUT DEVICE
804
MAIN MEMORY
INSTRUCTIONS
Intraoral Scan Application 850
826
814
CURSOR CONTROL DEVICE
806
STATIC MEMORY
828
DATA STORAGE DEVICE
COMPUTER-READABLE MEDIUM
824
INSTRUCTIONS
826
Intraoral Scan Application 850
822
NETWORK INTERFACE DEVICE
820
SIGNAL GENERATION DEVICE
864
NETWORK

FIG. 8

SELECTION AND LOCKING OF INTRAORAL IMAGES

RELATED APPLICATIONS

The present application is a continuation of U.S. patent application Ser. No. 15/993,504, filed May 30, 2018, which in turn is a continuation of U.S. patent application Ser. No. 15/222,525, filed Jul. 28, 2016, now U.S. Pat. No. 10,004,572 issued Jun. 26, 2018, which is in turn a continuation of U.S. patent application Ser. No. 14/640,909, filed Mar. 6, 2015, now U.S. Pat. No. 9,451,873 issued Sep. 27, 2016, all of which are incorporated by reference herein.

TECHNICAL FIELD

Embodiments of the present invention relate to the field of intraoral scanning and, in particular, to a system and method for improving the results of intraoral scanning.

BACKGROUND

In prosthodontic procedures designed to implant a dental prosthesis in the oral cavity, the intraoral site at which the prosthesis is to be implanted in many cases should be measured accurately and studied carefully, so that a prosthesis such as a crown, denture or bridge, for example, can be properly designed and dimensioned to fit in place. A good fit enables mechanical stresses to be properly transmitted between the prosthesis and the jaw, and can prevent infection of the gums and tooth decay via the interface between the prosthesis and the intraoral site, for example. The intraoral site may be scanned to provide three-dimensional (3D) data of the intraoral site. However, if the area of a preparation tooth containing a finish line lacks definition, it may not be possible to properly determine the finish line, and thus the margin of a restoration may not be properly designed.

BRIEF DESCRIPTION OF THE DRAWINGS

The present invention is illustrated by way of example, and not by way of limitation, in the figures of the accompanying drawings.

FIG. **1** illustrates one embodiment of a system for performing intraoral scanning and generating a virtual three-dimensional model of an intraoral site.

FIG. **2** illustrates a flow diagram for a method of automatically locking an image set of an intraoral site, in accordance with embodiments of the present invention.

FIG. **3** illustrates a flow diagram for a method of locking multiple image sets of one or more intraoral sites, in accordance with embodiments of the present invention.

FIG. **4** illustrates a flow diagram for a method of stitching together multiple image sets of one or more intraoral sites, in accordance with embodiments of the present invention.

FIG. **5** illustrates a flow diagram for a method of detecting an anomaly in an image set of an intraoral site and replacing the anomaly with data from an additional intraoral image, in accordance with embodiments of the present invention.

FIG. **6** illustrates a flow diagram for a method of extending a model of an intraoral site where an incomplete edge is detected, in accordance with embodiments of the present invention.

FIG. **7**A illustrates a portion of an example dental arch during an intraoral scan session after a first set of intraoral images of a preparation tooth have been generated.

FIG. **7**B illustrates the example dental arch of FIG. **7**A during the intraoral scan session after a second set of intraoral images of a tooth adjacent to the preparation tooth have been generated.

FIG. **7**C illustrates the first set of intraoral images of FIG. **7**A, wherein the first set of intraoral images includes an anomaly.

FIG. **7**D illustrates a model created from the first set of intraoral images of FIG. **7**C with data from an additional intraoral image.

FIG. **7**E illustrates a set intraoral images of a preparation tooth, wherein the set of intraoral images fails to capture all of the preparation tooth.

FIG. **7**F illustrates a model created from the first set of intraoral images of FIG. **7**E with data from an additional intraoral image.

FIG. **8** illustrates a block diagram of an example computing device, in accordance with embodiments of the present invention.

DETAILED DESCRIPTION

Described herein are a method and apparatus for improving the quality of scans, such as intraoral scans taken of intraoral sites (e.g., dental sites) for patients. During a scan session, a user (e.g., a dental practitioner) of a scanner may generate multiple different images (also referred to as scans) of an intraoral site, model of an intraoral site, or other object. The images may be discrete images (e.g., point-and-shoot images) or frames from a video (e.g., a continuous scan). The practitioner may take a first set of intraoral images of a first tooth after readying the first tooth for scanning. For example, if the first tooth is a preparation tooth (also referred to as a preparation), then one or more operations may be performed prior to generating the first set of intraoral images to ensure that a quality of the first set of intraoral images is high. In one example, these operations briefly expose a finish line of the preparation tooth to ensure that the finish line will show up in the first set of intraoral images.

After completing the first set of intraoral images, the practitioner may take additional sets of intraoral images of one or more adjacent teeth. The additional sets of intraoral images may include data for portions of the first tooth that was the focus of the first set of intraoral images. In some instances during creation of a 3D model using the intraoral images, the data from the additional sets of intraoral images combines with (e.g., is averaged with) the data for the first tooth from the first set of intraoral images to degrade a quality of that first tooth in the 3D model.

In embodiments, to prevent the data from the additional sets of intraoral images from degrading a quality of the first tooth in the 3D model, the first set of images is automatically locked after the first set of intraoral images is created. Additionally, portions of the first set of intraoral images that depict the first tooth may be exclusively used for the generation of the 3D model of that first tooth. Thus, the additional sets of intraoral images do not alter or add noise to a region of the 3D model depicting the first tooth as a result of the first set of intraoral image being locked. In one embodiment, an identity of the first tooth is determined, and the first portions of the first set of intraoral images are selected based at least in part on the identity of the first tooth. Thus, the lower quality data from the additional sets of intraoral images that depict the first tooth may not be applied when generating the 3D model of the first tooth. This may improve an image quality of the first tooth in the 3D model of an intraoral site (e.g., of a portion of a jaw).

Embodiments described herein are discussed with reference to intraoral scanners, intraoral images, intraoral scan sessions, and so forth. However, it should be understood that embodiments also apply to other types of scanners than intraoral scanners. Embodiments may apply to any type of scanner that takes multiple images and stitches these images together to form a combined image or virtual model. For example, embodiments may apply to desktop model scanners, computed tomography (CT) scanners, and so forth. Additionally, it should be understood that the intraoral scanners or other scanners may be used to scan objects other than intraoral sites in an oral cavity. For example, embodiments may apply to scans performed on physical models of an intraoral site or any other object. Accordingly, embodiments describing intraoral images should be understood as being generally applicable to any types of images generated by a scanner, embodiments describing intraoral scan sessions should be understood as being applicable to scan sessions for any type of object, and embodiments describing intraoral scanners should be understood as being generally applicable to many types of scanners.

FIG. **1** illustrates one embodiment of a system **100** for performing intraoral scanning and/or generating a virtual three-dimensional model of an intraoral site. In one embodiment, system **100** carries out one or more operations described below with reference to FIGS. **2-6**.

System **100** includes a computing device **105** that may be coupled to a scanner **150** and/or a data store **110**. Computing device **105** may include a processing device, memory, secondary storage, one or more input devices (e.g., such as a keyboard, mouse, tablet, and so on), one or more output devices (e.g., a display, a printer, etc.), and/or other hardware components. The computing device **105** may be integrated into the scanner **150** in some embodiments to improve performance and/or mobility.

Computing device **105** may be connected to data store **110** either directly or via a network. The network may be a local area network (LAN), a public wide area network (WAN) (e.g., the Internet), a private WAN (e.g., an intranet), or a combination thereof. Alternatively, data store **110** may be an internal data store. Examples of network data stores include a storage area network (SAN), a network attached storage (NAS), and a storage service provided by a cloud computing service provider. Data store **110** may include a file system, a database, or other data storage arrangement.

In some embodiments, a scanner **150** for obtaining three-dimensional (3D) data of an intraoral site in a patient's oral cavity is operatively connected to the computing device **105**. Scanner **150** may include a probe (e.g., a hand held probe) for optically capturing three-dimensional structures (e.g., by confocal focusing of an array of light beams). One example of such a scanner **150** is the iTero® intraoral digital scanner manufactured by Align Technology, Inc. Other examples of intraoral scanners include the 3M™ True Definition Scanner and the Apollo DI intraoral scanner and CEREC AC intraoral scanner manufactured by Sirona®.

The scanner **150** may be used to perform an intraoral scan of a patient's oral cavity. An intraoral scan application **108** running on computing device **105** may communicate with the scanner **150** to effectuate the intraoral scan. A result of the intraoral scan may be one or more sets of intraoral images that have been discretely generated (e.g., by pressing on a "generate image" button of the scanner for each image). Alternatively, a result of the intraoral scan may be one or more videos of the patient's oral cavity. An operator may start recording the video with the scanner **150** at a first position in the oral cavity, move the scanner **150** within the oral cavity to a second position while the video is being taken, and then stop recording the video. The scanner **150** may transmit the discrete intraoral images or intraoral video (referred to collectively as intraoral image data sets **135**A-**135**N) to the computing device **105**. Computing device **105** may store the intraoral image data sets **135**A-**135**N in data store **110**. Alternatively, scanner **150** may be connected to another system that stores the intraoral image data sets **135**A-**135**N in data store **110**. In such an embodiment, scanner **150** may not be connected to computing device **105**.

In one embodiment, intraoral scan application **108** includes an anomaly identifying module **115**, a flagging module **118**, a model generation module **125**, an image locking module **128**, an eraser module **132** and an expansion module **134**. Alternatively, the operations of one or more of the anomaly identifying module **115**, flagging module **118**, model generation module **125**, image locking module **128**, eraser module **132** and/or expansion module **134** may be combined into a single module or separated into further modules.

According to an example, a user (e.g., a practitioner) may subject a patient to intraoral scanning. In doing so, the user may apply scanner **150** to one or more patient intraoral locations. The scanning may be divided into one or more segments. As an example, the segments may include a lower buccal region of the patient, a lower lingual region of the patient, a upper buccal region of the patient, an upper lingual region of the patient, one or more preparation teeth of the patient (e.g., teeth of the patient to which a dental device such as a crown or other dental prosthetic will be applied), one or more teeth which are contacts of preparation teeth (e.g., teeth not themselves subject to a dental device but which are located next to one or more such teeth or which interface with one or more such teeth upon mouth closure), and/or patient bite (e.g., scanning performed with closure of the patient's mouth with the scan being directed towards an interface area of the patient's upper and lower teeth). Via such scanner application, the scanner **150** may provide image data (also referred to as scan data) to computing device **105**. The image data may be provided in the form of intraoral image data sets **135**A-**135**N, each of which may include 2D intraoral images and/or 3D intraoral images of particular teeth and/or regions of an intraoral site. In one embodiment, separate image data sets are created for the maxillary arch, for the mandibular arch, for a patient bite, and for each preparation tooth. Such images may be provided from the scanner to the computing device **105** in the form of one or more points (e.g., one or more pixels and/or groups of pixels). For instance, the scanner **150** may provide such a 3D image as one or more point clouds.

The manner in which the oral cavity of a patient is to be scanned may depend on the procedure to be applied thereto. For example, if an upper or lower denture is to be created, then a full scan of the mandibular or maxillary edentulous arches may be performed. In contrast, if a bridge is to be created, then just a portion of a total arch may be scanned which includes an edentulous region, the neighboring preparation teeth (e.g., abutment teeth) and the opposing arch and dentition. Thus, the dental practitioner may input the identity of a procedure to be performed into intraoral scan application **108**. For this purpose, the dental practitioner may choose the procedure from a number of preset options on a drop-down menu or the like, from icons or via any other suitable graphical user interface. Alternatively, the identity of the procedure may be input in any other suitable way, for example by means of preset code, notation or any other

suitable manner, intraoral scan application **108** having been suitably programmed to recognize the choice made by the user.

By way of non-limiting example, dental procedures may be broadly divided into prosthodontic (restorative) and orthodontic procedures, and then further subdivided into specific forms of these procedures. Additionally, dental procedures may include identification and treatment of gum disease, steep apnea, and intraoral conditions. The term prosthodontic procedure refers, inter alia, to any procedure involving the oral cavity and directed to the design, manufacture or installation of a dental prosthesis at a dental site within the oral cavity (intraoral site), or a real or virtual model thereof, or directed to the design and preparation of the intraoral site to receive such a prosthesis. A prosthesis may include any restoration such as crowns, veneers, inlays, onlays, implants and bridges, for example, and any other artificial partial or complete denture. The term orthodontic procedure refers, inter alia, to any procedure involving the oral cavity and directed to the design, manufacture or installation of orthodontic elements at a intraoral site within the oral cavity, or a real or virtual model thereof, or directed to the design and preparation of the intraoral site to receive such orthodontic elements. These elements may be appliances including but not limited to brackets and wires, retainers, clear aligners, or functional appliances.

For many prosthodontic procedures (e.g., to create a crown, bridge, veneer, etc.), an existing tooth of a patient is ground down to a stump. The ground tooth is referred to herein as a preparation tooth, or simply a preparation. The preparation tooth has a finish line (also referred to as a margin line), which is a border between a natural (unground) portion of the preparation tooth and the prepared (ground) portion of the preparation tooth. The preparation tooth is typically created so that a crown or other prosthesis can be mounted or seated on the preparation tooth. In many instances, the finish line of the preparation tooth is below the gum line. While the term preparation typically refers to the stump of a preparation tooth, including the finish line and shoulder that remains of the tooth, the term preparation herein also includes artificial stumps, pivots, cores and posts, or other devices that may be implanted in the intraoral cavity so as to receive a crown or other prosthesis. Embodiments described herein with reference to a preparation tooth also apply to other types of preparations, such as the aforementioned artificial stumps, pivots, and so on.

After the preparation tooth is created, a practitioner performs operations to ready that preparation tooth for scanning. Readying the preparation tooth for scanning may include wiping blood, saliva, etc. off of the preparation tooth and/or separating a patient's gum from the preparation tooth to expose the finish line. In some instances, a practitioner will insert a cord around the preparation tooth between the preparation tooth and the patient's gum. The practitioner will then remove the cord before generating a set of intraoral scans of the preparation tooth. The soft tissue of the gum will then revert back to its natural position, and in many cases collapses back over the finish line, after a brief time period. Accordingly, the practitioner uses the scanner **150** to scan the readied preparation tooth and generate a set of intraoral images (e.g., intraoral image data set **135**A) of the preparation tooth before the soft tissue reverts back to its natural position.

After generating the set of intraoral images for the preparation tooth, the practitioner may preview the set of intraoral images (or a 3D model crated therefrom) to determine if the set of intraoral images have satisfactory quality. The practitioner may then either rescan the preparation tooth (or a portion thereof) if the quality is not satisfactory, or may proceed to generate additional sets of intraoral images (e.g., intraoral image sets **135**B-**135**N) for adjacent teeth and other areas around the preparation tooth if the quality is satisfactory. These additional sets of intraoral images for the adjacent areas may be taken, for example, to ensure that a dental prosthesis will fit in the patient's mouth. The additional sets of intraoral images may also capture portions of the preparation tooth after the gum has collapsed back over the finish line and/or after blood and/or saliva has accumulated on the preparation tooth.

Accordingly, in one embodiment after a first set of intraoral images (e.g., intraoral image data set **135**A) is taken (e.g., of a preparation tooth), image locking module **128** automatically locks that first set of intraoral images. The locked first set of intraoral images may be associated with a preparation tooth of a patient. In one embodiment, image locking module **128** automatically locks image data sets associated with preparation teeth, but does not automatically lock other image data sets. Accordingly, image locking module **128** may determine whether a new image data set is associated with a preparation tooth, and if so lock that image data set.

The identity of the preparation tooth may be used by image locking module **128** to automatically select portions of the locked first set of intraoral images that will be applied for the preparation tooth in a 3D model. Alternatively, a practitioner may use a graphical user interface (GUI) to mark the portions of the locked set of intraoral images that will be applied for the preparation tooth in the 3D model. In either case, the image locking module **128** may update the locked image data set so that only portions of the locked image data set that depict the preparation tooth are locked, while the portions of the image data set that depict gums, other teeth, etc. are unlocked. In one embodiment, image locking module **128** performs image processing to determine a contour of the preparation tooth as well as the finish line. All data representing the preparation tooth inside of the finish line may be locked, while all data representing other intraoral features outside of the finish line may be unlocked. In one embodiment, a buffer is applied, and all data within the finish line plus the buffer is locked. The buffer may be, for example, a 1-3 mm offset from the finish line. Thus, image locking module **128** may algorithmically determine what data to keep in the locked image data set. Alternatively, a user may manually determine what data to keep in the locked image data set. For example, the user may outline the area that he or she wishes to keep via the graphical user interface. This locked image data set can later be unlocked at any time by a user.

The data from additional sets of intraoral images, which may also include lower quality depictions of the preparation tooth, may be ignored by model generation module **125** during creation of the preparation tooth in the 3D model. Thus, the finish line captured in the first image data set is not degraded by further image data.

In a further embodiment, additional intraoral image data sets may be generated for additional preparation teeth and/or other teeth, such as teeth that are adjacent to a scanned preparation tooth. Image locking module **128** may automatically (e.g., algorithmically and/or without user input) lock some or all image data sets after the image data sets have been created and before additional intraoral images are taken. Image locking module **128** may assign each locked intraoral image data set **135**A-**135**N a separate layer or group identifier. These layers may be used to refer to entire

image data sets, and may be used to display or hide image data sets and/or to prioritize data from image data sets for stitching together such image data sets.

In an example, a first image data set may be associated with a first tooth and a second image data set may be associated with an adjacent second tooth. Data from the first image data set may overlap data from the second image data set, and may diverge from the data from the second image data set. To stitch together the image data sets, the discrepancies between overlapping regions of an intraoral site depicted in these two image data sets should be remedied. One technique of remedying the discrepancies is to average the data of the first image data set with the data of the second image data set for the overlapping regions. With the use of layers, a weight may be assigned to each image data set, and the averaging of the image data sets may be a weighted average. For example, if a user knows that data for a particular overlapping region from a first image data set is superior in quality to data for the particular overlapping region of the second image data set, the user may select the first image data set as having a higher priority. Model generation module **125** may then weight the first image data set more heavily than the second image data set when averaging the differences between the image data sets.

Image locking module **128** may associate each intraoral image data set **135**A-**135**N with a particular tooth and/or may otherwise identify an intraoral site associated with each intraoral image data set **135**A-**135**N. In one embodiment, a user indicates which tooth he or she is scanning before generating an image data set. Alternatively, a user may first take an image data set, and may subsequently indicate a tooth imaged in the image data set. In another implementation, intraoral scan application **108** may instruct the user to scan a particular tooth, and may associate an identity of that particular tooth with the image data set. Thus, each locked intraoral image data set **135**A-**135**N may be associated with a particular tooth, which may or may not be a preparation tooth.

When a scan session is complete (e.g., all images for an intraoral site have been captured), model generation module **125** may generate a virtual 3D model of the scanned intraoral site. To generate the virtual 3D model, model generation module **125** may register (i.e., "stitch" together) the intraoral images generated from the intraoral scan session. In one embodiment, performing image registration includes capturing 3D data of various points of a surface in multiple images (views from a camera), and registering the images by computing transformations between the images. The images may then be integrated into a common reference frame by applying appropriate transformations to points of each registered image.

In one embodiment, image registration is performed for each pair of adjacent or overlapping intraoral images (e.g., each successive frame of an intraoral video). Image registration algorithms are carried out to register two adjacent intraoral images, which essentially involves determination of the transformations which align one image with the other. Image registration may involve identifying multiple points in each image (e.g., point clouds) of an image pair, surface fitting to the points of each image, and using local searches around points to match points of the two adjacent images. For example, model generation module **125** may match points of one image with the closest points interpolated on the surface of the other image, and iteratively minimize the distance between matched points. Model generation module **125** may also find the best match of curvature features at points of one image with curvature features at points interpolated on the surface of the other image, without iteration. Model generation module **125** may also find the best match of spin-image point features at points of one image with spin-image point features at points interpolated on the surface of the other image, without iteration. Other techniques that may be used for image registration include those based on determining point-to-point correspondences using other features and minimization of point-to-surface distances, for example. Other image registration techniques may also be used.

Many image registration algorithms perform the fitting of a surface to the points in adjacent images, which can be done in numerous ways. Parametric surfaces such as Bezier and B-Spline surfaces are most common, although others may be used. A single surface patch may be fit to all points of an image, or alternatively, separate surface patches may be fit to any number of a subset of points of the image. Separate surface patches may be fit to have common boundaries or they may be fit to overlap. Surfaces or surface patches may be fit to interpolate multiple points by using a control-point net having the same number of points as a grid of points being fit, or the surface may approximate the points by using a control-point net which has fewer number of control points than the grid of points being fit. Various matching techniques may also be employed by the image registration algorithms.

In one embodiment, model generation module **125** may determine a point match between images, which may take the form of a two dimensional (2D) curvature array. A local search for a matching point feature in a corresponding surface patch of an adjacent image may be carried out by computing features at points sampled in a region surrounding the parametrically similar point. Once corresponding point sets are determined between surface patches of the two images, determination of the transformation between the two sets of corresponding points in two coordinate frames can be solved. Essentially, an image registration algorithm may compute a transformation between two adjacent images that will minimize the distances between points on one surface, and the closest to them found in the interpolated region on the other image surface used as a reference.

Model generation module **125** repeats image registration for adjacent image pairs of a sequence of intraoral images to obtain a transformation between each pair of images, to register each image with the previous one. Model generation module **125** then integrates all images into a single virtual 3D model by applying the appropriate determined transformations to each of the images. Each transformation may include rotations about one to three axes and translations within one to three planes.

In many instances, data from one set of intraoral images does not perfectly correspond to data from another set of intraoral images. For each intraoral image data set **135**A-**135**N, image locking module **128** may use the identity of the associated tooth to determine what portions of that image data set will be used exclusively for creation of a particular region of a 3D model (e.g., for creation of the associated tooth in the 3D model). The image locking module **128** may analyze the image data in each intraoral image data set. For each image data set, the image locking module **128** may use stored information about an associated tooth to determine from the analysis which portions or areas of that image data set represent that tooth and which portions or areas of that image data set represent other intraoral objects such as gums and other teeth. The selection module **130** may then generate a contour of that tooth in the image data set. The generated contour may act as a border. Data from the image data set that is within the contour may be exclusively used by model

generation module **125** to generate the specific associated tooth in a 3D model. Data from the image data set that is outside of the contour may or may not be used to generate additional features or objects in the 3D model. Additionally, data outside the contour may be combined with data from other image data sets to generate the additional features or objects in the 3D model.

In one embodiment, the operation of contouring the tooth in a locked image data set is performed by image locking module (as described above). Image locking module **128** may then update the locked image data set to lock portions of the image data set inside of the contour and unlock portions of the image data set outside of the contour.

Anomaly identifying module **115** is responsible for identifying anomalies and/or other areas of interest (AOIs) from intraoral scan data (e.g., intraoral images in an intraoral image data set) and/or virtual 3D models generated from intraoral scan data. Such anomalies may include voids (e.g., areas for which scan data is missing), areas of conflict or flawed scan data (e.g., areas for which overlapping surfaces of multiple intraoral images fail to match), areas indicative of foreign objects (e.g., studs, bridges, etc.), unclear margin line (e.g., margin line of one or more preparation teeth), noisy information, and so forth. An identified void may be a void in a surface of an image. Examples of surface conflict include double incisor edge and/or other physiologically unlikely tooth edge, bite line shift, inclusion or lack of blood, saliva and/or foreign objects, differences in depictions of a margin line, and so on. The anomaly identifying module **115** may, in identifying an anomaly, analyze patient image data (e.g., 3D image point clouds) and/or one or more virtual 3D models of the patient alone and/or relative to reference data **138**. The analysis may involve direct analysis (e.g., pixel-based and/or other point-based analysis), the application of machine learning, and/or the application of image recognition. Such reference data **138** may include past data regarding the at-hand patient (e.g., intraoral images and/or virtual 3D models), pooled patient data, and/or pedagogical patient data, some or all of which may be stored in data store **110**.

Anomaly identifying module **115** to identify anomalies by performing image processing to identify an unexpected shape, a region with low clarity, a region missing data, color discrepancies, and so forth. Different criteria may be used to identify different classes of anomalies. In one embodiment, an area of missing image data is used to identify anomalies that might be voids. For example, voxels at areas that were not captured by the intraoral images may be identified. In one embodiment, anomaly identifying module interpolates a shape for the anomaly based on geometric features surrounding the anomaly and/or based on geometric features of the anomaly (if such features exist). Such geometric features may be determined by using edge detection, corner detection, blob detection, ridge detection, Hough transformations, structure tensors, and/or other image processing techniques.

The data regarding the at-hand patient may include X-rays, 2D intraoral images, 3D intraoral images, 2D models, and/or virtual 3D models corresponding to the patient visit during which the scanning occurs. The data regarding the at-hand patient may additionally include past X-rays, 2D intraoral images, 3D intraoral images, 2D models, and/or virtual 3D models of the patient (e.g., corresponding to past visits of the patient and/or to dental records of the patient).

The pooled patient data may include X-rays, 2D intraoral images, 3D intraoral images, 2D models, and/or virtual 3D models regarding a multitude of patients. Such a multitude of patients may or may not include the at-hand patient. The pooled patient data may be anonymized and/or employed in compliance with regional medical record privacy regulations (e.g., the Health Insurance Portability and Accountability Act (HIPAA)). The pooled patient data may include data corresponding to scanning of the sort discussed herein and/or other data. The pedagogical patient data may include X-rays, 2D intraoral images, 3D intraoral images, 2D models, virtual 3D models, and/or medical illustrations (e.g., medical illustration drawings and/or other images) employed in educational contexts. The pedagogical patient data may include volunteer data and/or cadaveric data.

Anomaly identifying module **115** may analyze patient scan data from later in a patient visit during which the scanning occurs (e.g., one or more later-in-the-visit 3D image point clouds and/or one or more later-in-the-visit virtual 3D models of the patient) relative to additional patient scan data in the form of data from earlier in that patient visit (e.g., one or more earlier-in-the-visit 3D image point clouds and/or one or more earlier-in-the-visit virtual 3D models of the patient). Anomaly identifying module **115** may additionally or alternatively analyze patient scan data relative to reference data in the form of dental record data of the patient and/or data of the patient from prior to the patient visit (e.g., one or more prior-to-the-visit 3D image point clouds and/or one or more prior-to-the-visit virtual 3D models of the patient). Anomaly identifying module **115** may additionally or alternatively analyze patient scan data relative to pooled patient data and/or pedagogical patient data.

Identifying of anomalies concerning missing and/or flawed scan data may involve the anomaly identifying module **115** performing direct analysis, for instance determining one or more pixels or other points to be missing from patient scan data and/or one or more virtual 3D models of the patient. Identification of anomalies concerning missing and/or flawed scan data may additionally or alternatively involve employing pooled patient data and/or pedagogical patient data to ascertain patient scan data and/or virtual 3D models as being incomplete (e.g., possessing discontinuities) relative to that which is indicated by the pooled patient data and/or pedagogical patient data.

Flagging module **118** is responsible for determining how to present and/or call out the identified anomalies. Flagging module **118** may provide indications or indicators of anomalies. The indications may be presented (e.g., via a user interface) to a user (e.g., a practitioner) in connection with and/or apart from one or more depictions of teeth and/or gingivae of a patient (e.g., in connection with one or more X-rays, 2D intraoral images, 3D intraoral images, 2D models, and/or virtual 3D models of the patient). Indication presentation in connection with depictions of patient teeth and/or gingivae may involve the indications being placed so as to correlate an indication with the corresponding portion of the teeth and/or gingivae.

The indications may be provided in the form of flags, markings, contours, text, images, and/or sounds (e.g., in the form of speech). Such a contour may be placed (e.g., via contour fitting) so as to follow an extant tooth contour and/or gingival contour (e.g., as a border). As an illustration, a contour corresponding to a void may be placed so as to follow a contour of the missing data. Such a contour may be placed (e.g., via contour extrapolation) with respect to a missing tooth contour and/or gingival contour so as to follow a projected path of the missing contour. As an illustration, a contour corresponding to missing tooth scan data may be placed so as to follow the projected path of the tooth portion which is missing, or a contour corresponding

to missing gingival scan data may be placed so as to follow the projected path of the gingival portion which is missing.

Data for portions of the intraoral image data set that is within the contoured anomaly may be unlocked or removed from the locked intraoral image data set. The anomaly may be identified to a user, and the user may then generate a new intraoral image that captures the area of the anomaly in the intraoral site. The portion of the new intraoral image that corresponds to an inside of the contour of the anomaly is then used to replace the original data from the intraoral image data set for the anomaly. This data may then be added to the locked image data set. Thus, anomalies may be automatically detected in a set of intraoral images, and an additional intraoral image may be taken to overwrite the anomaly without affecting the rest of the intraoral image data set.

In one embodiment, after anomaly identifying module **115** identifies an anomaly, anomaly identifying module **115** may then determine whether there are any additional image data sets that include data covering the area at which the anomaly was identified. Anomaly identifying module **115** may compare this area from the one or more additional image data sets to the data of the locked image data set. Based on this comparison, anomaly identifying module **115** may determine that the data of the locked image data set covering the contour is to be replaced by data from another image data set. The portion of the other image data set that corresponds to an inside of the contour of the anomaly may then be used to replace the original data from the intraoral image data set for the anomaly. This data may then be added to the locked image data set.

In one embodiment, a different replacement option is presented to a user for each additional image data set. Thus, for each additional image data set, anomaly identifying module **115** may replace the anomaly with image data covering the contour of the anomaly from that additional image data set. Each of the replacement options may be presented to the user, who may then select which of the replacement options to apply. Once a user selection has been received, the data from the additional image data set associated with the user selection may be used to replace the anomaly in the locked image data set.

A 3D model created by model generation module **125** may be displayed to a user via a user interface of intraoral scan application. The 3D model can then be checked visually by the user. The user can virtually manipulate the 3D model via the user interface with respect to up to six degrees of freedom (i.e., translated and/or rotated with respect to one or more of three mutually orthogonal axes) using suitable user controls (hardware and/or virtual) to enable viewing of the 3D model from any desired direction. In addition to anomaly identifying module **115** algorithmically identifying anomalies for rescan, a user may review (e.g., visually inspect) the generated 3D model of an intraoral site and determine that one or more areas of the 3D model are unacceptable.

Based on the inspection, the user may determine that part of the 3D model is unsuitable or undesired, and that a remainder of the 3D model is acceptable. The unacceptable portion of the 3D model can correspond, for example, to a part of a real dental surface of a scanned intraoral site that was not sufficiently clearly defined in the 3D model. For example, during the initial 3D data collection step, for example via scanning, that resulted in the first 3D virtual model being generated, the corresponding part of the physical dental surface may have been covered with foreign material, such as for example saliva, blood, or debris. The corresponding part of the physical dental surface may also have been obscured by another element such as for example part of the gums, cheek, tongue, dental instruments, artifacts, etc. Alternatively, for example, during the initial 3D data collection step (e.g., via scanning) that resulted in the first 3D virtual model being generated, the unacceptable portion may be distorted or otherwise defective and may not properly correspond to a physical dental surface (e.g., due to some detect in the actual scanning process).

Via the user interface, a user may mark or otherwise demarcate the unacceptable portion of the 3D model. Eraser module **132** may then delete or otherwise remove the marked portion from the 3D model (and the associated portions of a locked image data set and/or other image data set used to create the unacceptable portion). For example, the dental procedure of interest may be providing a dental prosthesis, and the deleted or removed part of the 3D model may be part of a finish line of a tooth preparation that exists in a real dental surface, but was not clearly represented in the 3D model (or in the intraoral image data sets **135**A-**135**N used to create the 3D model).

Intraoral scan application **108** may direct a user to generate one or more additional intraoral images of the dental site corresponding to the portion of the 3D model (and corresponding set or sets of intraoral images) that was deleted or removed. The user may then use the scanner **150** to generate the one or more additional intraoral images, which at least partially overlaps with previously generated intraoral images. The one or more additional intraoral images may be registered with the 3D model (and/or with the intraoral image data sets used to create the 3D model) to provide a composite of the 3D model and the one or more additional intraoral images. In the composite, the part of the 3D model that was previously deleted/removed is at least partially replaced with a corresponding part of the one or more additional intraoral images. However, the portions of the one or more additional images that are outside of the deleted or removed part of the 3D model are not applied to the composite or updated 3D model. In one embodiment, the portion of the new intraoral image that corresponds to the erased portion of a locked image data set is added to the locked image data set.

Expansion module **134** may perform operations similar to those of anomaly identifying module **115** and/or eraser module **132**. However, rather than identifying and correcting anomalies or unacceptable portions within a 3D model, expansion module **134** may identify and/or correct portions of the 3D model at an edge of the 3D model. For example, an intraoral image data set **135**A may have missed a portion of a tooth such that the tooth is cut off in the 3D model (e.g., a portion of the tooth is not shown in the 3D model). Expansion module **134** may algorithmically detect an edge of the 3D model where a tooth appears to be clipped. Alternatively, a user may indicate via the user interface that a portion of the tooth is not represented in the 3D model. The user may or may not mark a portion of edge of the 3D model where the model is incomplete.

A user may then use scanner **150** to generate one or more additional intraoral images of the intraoral site (e.g., tooth) corresponding to the area of the 3D model where data was missing. The one or more additional intraoral images may be registered to the 3D model. Expansion module **134** may then determine that a portion of the one or more additional intraoral images represents a region of the intraoral site (e.g., tooth) that was missing from the initial 3D model. This portion of the one or more additional intraoral images may then be added to the 3D model to expand the 3D model for

the intraoral site (e.g., tooth). Additionally, the portion of the one or more additional intraoral images may be appended to a locked image data set.

In one embodiment, a practitioner may have generated a full or partial scan of one or more dental arches of a patient. At some time after the scan was completed, the patient may experience a change in dental health, and may require a bridge or other prosthodontic to be applied where there used to be a health tooth. In such an instance, the dental practitioner may leverage the previously completed scan. In particular, the practitioner may generate a preparation tooth, and may then scan that preparation tooth to generate a locked intraoral image data set of the preparation tooth. This locked intraoral image data set may then be combined with the previously generated scan data to create a new 3D model of the patient's dental arch. Most of the arch in the new 3D model will be based on data from the original scan, while the data for the preparation tooth will be based on the locked image data set.

FIGS. **2-6** illustrate flow diagrams for methods of processing sets of intraoral images and generating virtual 3D models therefrom. These methods may be performed by processing logic that comprises hardware (e.g., circuitry, dedicated logic, programmable logic, microcode, etc.), software (such as instructions run on a processing device), or a combination thereof. In one embodiment, processing logic corresponds to computing device **105** of FIG. **1** (e.g., to a computing device **105** executing an intraoral scan application **108**).

FIG. **2** illustrates a flow diagram for a method **200** of automatically locking an image set of an intraoral site, in accordance with embodiments of the present invention. At block **205** of method **200** an intraoral scan session is started. During the intraoral scan session, a dental practitioner uses an intraoral scanner to create a set of intraoral images focused on a particular intraoral site (e.g., focused on a particular tooth). Processing logic may direct the dental practitioner as to which intraoral site (e.g., which tooth) is to be scanned or the dental practitioner may indicate which intraoral site is to be scanned or has been scanned. Alternatively, processing logic may automatically (e.g., algorithmically) identify the intraoral site based on data from the set of intraoral images and/or based on one or more additional sets of intraoral images (e.g., that focus on other intraoral sites). At block **210**, processing logic receives a set of intraoral images of the intraoral site. At block **215**, processing logic locks the intraoral image data set. This ensures that portions of the intraoral image data set that depict particular areas of the intraoral site (e.g., that depict a particular preparation tooth, including its margin line) will not later be modified or degraded by additional intraoral images.

Referring to FIG. **7**A, a portion of an example dental arch **700** is illustrated during an intraoral scan session. The dental arch includes two preparation teeth **708**, **710** and adjacent teeth **704**, **706**, **712** as well as a patient's gums **702**. As shown, preparation teeth **708**, **710** have been ground down to stumps so as to act as abutments and receive a bridge. Preparation tooth **708** includes a finish line **709** and preparation tooth **710** includes a finish line **711**. The illustrated finish lines **709**, **711** are above the gum line to improve visibility for this example. However, in many instances the finish lines are below the gum line. In one example, cord may have been packed between the preparation tooth **708** and surrounding gums and then removed to cause the finish line **709** to be briefly exposed for scanning.

An intraoral image data set **713** including intraoral image **714**, intraoral image **716** and intraoral image **718** is shown. Each of the intraoral images **714-718** may have been generated by an intraoral scanner having a particular distance from the dental surface being imaged. At the particular distance, the intraoral images **714-718** have a particular scan area and scan depth. The shape and size of the scan area will generally depend on the scanner, and is herein represented by a rectangle. Each image may have its own reference coordinate system and origin. Each intraoral image may be generated by a scanner at a particular position (scanning station). The location and orientation of scanning stations may be selected such that together the intraoral images adequately cover an entire target zone. Preferably, scanning stations are selected such that there is overlap between the intraoral images **714-718** as shown. Typically, the selected scanning stations will differ when different scanners are used for the same target area, depending on the capture characteristics of the scanner used. Thus, a scanner capable of scanning a larger dental area with each scan (e.g., having a larger field of view) will use fewer scanning stations than a scanner that is only capable of capturing 3D data of a relatively smaller dental surface. Similarly, the number and disposition of scanning stations for a scanner having a rectangular scanning grid (and thus providing projected scanning areas in the form of corresponding rectangles) will typically be different from those for a scanner having a circular or triangular scanning grid (which would provide projected scanning areas in the form of corresponding circles or triangles, respectively). The intraoral image data set **713** is locked automatically, and may be assigned to a first layer.

Referring back to FIG. **2**, at block **220** of method **200** portions of the first set of intraoral images are selected algorithmically by processing logic. The selected portions may correspond to a contour of a tooth or other feature of the intraoral site. The selected portions may be determined based on performing image analysis and applying object recognition techniques, such as edge detection, edge matching, greyscale matching, gradient matching, bag of words models, and so on. Reference data may be used to train processing logic to detect particular objects such as teeth. In one embodiment, the known identity of the tooth or intraoral site is used to assist the object detection process and to select the portions of the intraoral images.

For example, in the example intraoral image data set **713** of FIG. **7**A, a contour of the preparation tooth **708** may be generated. All portions of the intraoral images **714-718** of the intraoral image data set **713** that are inside of the contour may be secured from further alteration. In one embodiment, the locked image data set is updated so that the area inside of the contour is locked in the image data set and the area outside of the contour is unlocked.

At block **225** of method **200**, processing logic receives one or more additional intraoral images that depict the intraoral site (e.g., that depict a tooth that was the focus of the locked set of intraoral images). These additional intraoral images may be part of one or more additional intraoral image data sets for one or more additional teeth, for example. At block **230**, processing logic generates a virtual 3D model that includes the intraoral site. The selected portions of the locked intraoral image (e.g., that are inside of the determined contour) are used to create a first region of the model. For example, the selected portions may be used to create a particular preparation tooth in the 3D model. Data from the additional intraoral images are not used to create the region of the 3D model.

Referring now to FIG. **7**B, the example dental arch of FIG. **7**A during the intraoral scan session is shown after a

second intraoral image data set **721** has been generated for a tooth **706** adjacent to the preparation tooth **708**. Intraoral image data set **721** includes intraoral images **722-728**, which focus on adjacent tooth **706**. However, as illustrated an area of intraoral image **726** in the second intraoral image data set **721** also depicts preparation tooth **708** and finish line **709**. However, since the first intraoral image data set **713** has been locked, data from the second intraoral image data set **721** will not be used when creating a virtual representation of preparation tooth **708** in a 3D model.

FIG. **3** illustrates a flow diagram for a method **300** of locking multiple image sets of one or more intraoral sites, in accordance with embodiments of the present invention. At block **302** of method **300** processing logic starts an intraoral scan session. At block **304**, processing logic receives a first set of intraoral images of a preparation tooth. At block **306**, processing logic determines an identity of the preparation tooth. At block **308**, processing logic locks the first set of intraoral images as a first layer.

At block **310**, processing logic receives a second set of intraoral images of another tooth that is adjacent to the preparation tooth. The adjacent tooth may or may not be another preparation tooth. At block **312**, processing logic determines an identity of the adjacent tooth. At block **314**, processing logic locks the second set of intraoral images as a second layer.

At block **316**, processing logic selects portions of the first set of intraoral images. This selection may be made based at least in part on the identity of the preparation tooth. Selecting the portions may include contouring the preparation tooth in the first set of intraoral images and selecting those portions that are within the contour. At block **318**, processing logic selects portions of the second set of intraoral images. This selection may be made based at least in part on the identity of the adjacent tooth. Selecting the portions may include contouring the adjacent tooth in the second set of intraoral images and selecting those portions that are within the contour.

At block **320**, processing logic generates a virtual 3D model of an intraoral site that includes the preparation tooth, the adjacent tooth and surrounding tissue.

Referring back to FIGS. **7A-7B**, intraoral image data set **713** may correspond to the first set of intraoral images of the preparation tooth in method **300**. Similarly, intraoral image data set **721** may correspond to the second set of intraoral images of the adjacent tooth in method **300**. Accordingly, those portions of intraoral image data set **713** that depict adjacent tooth **706** would not be used to recreate the adjacent tooth in the 3D model and those portions of intraoral image data set **721** that depict preparation tooth **708** would not be used to recreate the preparation tooth in the 3D model.

FIG. **4** illustrates a flow diagram for a method **400** of stitching together multiple image sets of one or more intraoral sites, in accordance with embodiments of the present invention. Processing logic may receive a first set if intraoral images (e.g., that focus on a preparation tooth) and a second set of intraoral images (e.g., that focus on an adjacent tooth or a full or partial arch). At block **405** of method **400**, processing logic identifies one or more discrepancies of overlapping data between the first set of intraoral images and the second set of intraoral images. For example, the first set of intraoral images and second set of intraoral images may each depict the gums between the preparation tooth and the adjacent tooth. However, the depictions of the gums in these intraoral image data sets may not line up perfectly. For example, blood and/or saliva may have accumulated on the gums between generation of the first intraoral image data set and the second intraoral image data set, or the positioning of the gums may be slightly different in the two intraoral image data sets. To create a 3D model that includes both the preparation tooth and the adjacent tooth, the data from the two intraoral image data sets should be merged, and the conflicts in the data remedied.

At block **410**, processing logic receives an indication of priorities of the first set of images and the second set of images. For example, the first set of images may be known to have a higher quality or be more important, and so a higher priority may be assigned to the first set of images. At block **415**, processing logic uses the received indications of priority to prioritize the image data sets. At block **420**, processing logic applies a weighted average of the overlapping data between the first set of images and the second set of images to merge the overlapping data. The weights that are applied to the image data sets may be based on their priority. For example, the first image data set assigned the higher priority may be assigned a weight of 70% and the second set of intraoral images may be assigned a weight of 30%. Thus, when the data is averaged, the merged result will look more like the depiction from the first image data set and less like the depiction from the second image data set.

In one embodiment, processing logic may render different versions of the 3D model, each version showing a different prioritization and/or different weightings of the intraoral image data sets. The user may visually inspect the different renderings and select which rendering looks the most accurate. Processing logic may then prioritize the image data sets accordingly and then apply the appropriate weighted average associated with the user selection to create the 3D model.

FIG. **5** illustrates a flow diagram for a method **500** of correcting an anomaly in an intraoral image data set and/or in a 3D virtual model generated from such an intraoral image data set, in accordance with embodiments of the present invention. The intraoral image data set may be a set of discrete images (e.g., taken from a point-and-shoot mode) or multiple frames of an intraoral video (e.g., taken in a continuous scanning or video mode). The intraoral image data set may have been for a particular dental site (e.g., tooth) of a patient, and may be locked to preserve the intraoral image data set.

At block **505** of method **500**, processing logic identifies an anomaly within the locked set of intraoral images and/or in a 3D model generated from the locked set of intraoral images. The anomaly may be identified by performing image processing on the intraoral image data set and applying a set of criteria thereto. In one embodiment, processing logic determines if any voxels or sets of voxels in the intraoral images or 3D model satisfy the one or more criteria. Different criteria may be used to identify different classes of anomalies. In one embodiment, missing image data is used to identify anomalies that might be voids. For example, voxels at areas that were not captured by the intraoral images may be identified.

At block **510**, processing logic determines a border of the anomaly, such as by generating a contour of the anomaly. In one embodiment, processing logic interpolates a shape for the anomaly based on geometric features surrounding the anomaly and/or based on geometric features of the anomaly (if such features exist). For example, if the anomaly is a void, then the regions around the void may be used to interpolate a surface shape of the void. The shape of the anomaly may then be used to create the contour. All data

outside of the contour may remain locked and unchangeable, while data inside of the contour may be replaced with data from new intraoral images.

Processing logic may provide an indication of the anomaly via a user interface. The contour of the anomaly may be displayed in manner to contrast the anomaly from surrounding imagery. For example, teeth may be shown in white, while the anomaly may be shown in red, black, blue, green, or another color. Additionally or alternatively, an indicator such as a flag may be used as an indication of the anomaly. The indicator may be remote from the anomaly but include a pointer to the anomaly. The anomaly may be hidden or occluded in many views of the intraoral site. However, the indicator may be visible in all or many such views.

Referring to FIG. **7**C, a set of intraoral images **730** is shown that includes a preparation tooth **708** having a finish line **709** and an anomaly **732**. As shown, the anomaly **732** has been contoured and has a particular shape (of an oval in this instance). The set of intraoral images **730** includes intraoral images **714**-**718**.

Referring back to FIG. **5**, at block **515**, processing logic receives an additional image of the intraoral site. The additional image may include data for the region of the 3D model or initial set of intraoral images where the anomaly was detected. At block **520**, processing logic updates the virtual 3D model based on replacing the data of the original set of intraoral images within the border or contour with additional data from the additional image of the intraoral site. Thus, the anomaly may be corrected without affecting a remainder of the virtual 3D model.

Referring FIG. **7**D, a virtual 3D model **740** created from the set of intraoral images **730** and data from an additional intraoral image **709** is shown. The rendering of the preparation tooth **708** outside of the contour of the anomaly **742** is unaffected by image data from the additional intraoral image **741**. However, the portion of the preparation tooth **708** that is inside the contour of the anomaly **742** is rendered based on data from the additional intraoral image **709**.

FIG. **6** illustrates a flow diagram for a method **600** of extending a model of an intraoral site where an incomplete tooth or other object is detected, in accordance with embodiments of the present invention. At block **605** of method **600**, processing logic determines that data for a preparation tooth (or other intraoral site) in a 3D model is incomplete. For example, processing logic may determine that an edge of the preparation tooth has been cut off. This determination may be made, for example, based on comparing an expected contour of the preparation tooth or other tooth with a contour of the preparation tooth or other tooth in a computed 3D model. If the computed contour varies from the expected contour by more than a threshold amount, processing logic may determine that the preparation tooth or other tooth is cut off in the model. In one embodiment, such a determination is made responsive to a user indication that the preparation tooth or other tooth in the 3D model is incomplete. For example, a user may review the 3D model, determine that a portion of a tooth is cut off, and manually enter an expansion mode to add data for the area that was cut off. Alternatively, such a determination may be made algorithmically without first receiving user input (e.g., based on performing image processing).

Referring to FIG. **7**E, a set of intraoral images **750** includes intraoral images **714** and **752**. The set of intraoral images **750** depicts a preparation tooth **708** having a finish line **709**. However, an edge **754** of the preparation tooth **708** is cut off.

At block **610**, processing logic receives an additional intraoral image of the preparation tooth (or other tooth). At block **615**, processing logic may identify a border for the edge of the preparation tooth. In one embodiment, this includes generating a contour of the edge of the preparation tooth at the border. In some instances this may already have been performed at block **605**. The shape of the edge may be used to create the contour or border. All data inside of the contour may remain locked and unchangeable.

At block **620**, processing logic updates the model based on replacing data outside the border with additional data from the additional intraoral image. Processing logic determines what portion of the additional intraoral image of the preparation tooth depicts the portion of the preparation tooth that was cut off in the initial set of intraoral images (e.g., outside the border of the edge where data was cut off). The identified portion of the additional intraoral image may then be appended to the initial set of intraoral image and used to extend the preparation tooth (or other tooth) in the model.

Referring to FIG. **7**F, a virtual 3D model **760** created from the set of intraoral images **750** of FIG. **7**E with data from an additional intraoral image **762** is shown. The rendering of the preparation tooth **708** inside of a contour of the preparation tooth **708** is unaffected by image data from the additional intraoral image **762**. However, a portion of the intraoral image **762** showing the cut off region outside of the edge **754** is used to extend the preparation tooth **708** in the 3D model **760**.

FIG. **8** illustrates a diagrammatic representation of a machine in the example form of a computing device **800** within which a set of instructions, for causing the machine to perform any one or more of the methodologies discussed herein, may be executed. In alternative embodiments, the machine may be connected (e.g., networked) to other machines in a Local Area Network (LAN), an intranet, an extranet, or the Internet. The machine may operate in the capacity of a server or a client machine in a client-server network environment, or as a peer machine in a peer-to-peer (or distributed) network environment. The machine may be a personal computer (PC), a tablet computer, a set-top box (STB), a Personal Digital Assistant (PDA), a cellular telephone, a web appliance, a server, a network router, switch or bridge, or any machine capable of executing a set of instructions (sequential or otherwise) that specify actions to be taken by that machine. Further, while only a single machine is illustrated, the term "machine" shall also be taken to include any collection of machines (e.g., computers) that individually or jointly execute a set (or multiple sets) of instructions to perform any one or more of the methodologies discussed herein. The term machine shall also refer to an integrated all-in-one device that includes an intraoral scanner and a computing device (e.g., scanner **150** and computing device **105** of FIG. **1**).

The example computing device **800** includes a processing device **802**, a main memory **804** (e.g., read-only memory (ROM), flash memory, dynamic random access memory (DRAM) such as synchronous DRAM (SDRAM), etc.), a static memory **806** (e.g., flash memory, static random access memory (SRAM), etc.), and a secondary memory (e.g., a data storage device **828**), which communicate with each other via a bus **808**.

Processing device **802** represents one or more general-purpose processors such as a microprocessor, central processing unit, or the like. More particularly, the processing device **802** may be a complex instruction set computing (CISC) microprocessor, reduced instruction set computing (RISC) microprocessor, very long instruction word (VLIW)

microprocessor, processor implementing other instruction sets, or processors implementing a combination of instruction sets. Processing device **802** may also be one or more special-purpose processing devices such as an application specific integrated circuit (ASIC), a field programmable gate array (FPGA), a digital signal processor (DSP), network processor, or the like. Processing device **802** is configured to execute the processing logic (instructions **826**) for performing operations and steps discussed herein.

The computing device **800** may further include a network interface device **822** for communicating with a network **864**. The computing device **800** also may include a video display unit **810** (e.g., a liquid crystal display (LCD) or a cathode ray tube (CRT)), an alphanumeric input device **812** (e.g., a keyboard), a cursor control device **814** (e.g., a mouse), and a signal generation device **820** (e.g., a speaker).

The data storage device **828** may include a machine-readable storage medium (or more specifically a non-transitory computer-readable storage medium) **824** on which is stored one or more sets of instructions **826** embodying any one or more of the methodologies or functions described herein. A non-transitory storage medium refers to a storage medium other than a carrier wave. The instructions **826** may also reside, completely or at least partially, within the main memory **804** and/or within the processing device **802** during execution thereof by the computer device **800**, the main memory **804** and the processing device **802** also constituting computer-readable storage media.

The computer-readable storage medium **824** may also be used to store an intraoral scan application **850**, which may correspond to the similarly named component of FIG. **1**. The computer readable storage medium **824** may also store a software library containing methods for an intraoral scan application **850**. While the computer-readable storage medium **824** is shown in an example embodiment to be a single medium, the term "computer-readable storage medium" should be taken to include a single medium or multiple media (e.g., a centralized or distributed database, and/or associated caches and servers) that store the one or more sets of instructions. The term "computer-readable storage medium" shall also be taken to include any medium other than a carrier wave that is capable of storing or encoding a set of instructions for execution by the machine and that cause the machine to perform any one or more of the methodologies of the present invention. The term "computer-readable storage medium" shall accordingly be taken to include, but not be limited to, solid-state memories, and optical and magnetic media.

It is to be understood that the above description is intended to be illustrative, and not restrictive. Many other embodiments will be apparent upon reading and understanding the above description. Although embodiments of the present invention have been described with reference to specific example embodiments, it will be recognized that the invention is not limited to the embodiments described, but can be practiced with modification and alteration within the spirit and scope of the appended claims. Accordingly, the specification and drawings are to be regarded in an illustrative sense rather than a restrictive sense. The scope of the invention should, therefore, be determined with reference to the appended claims, along with the full scope of equivalents to which such claims are entitled.

What is claimed is:

1. A method, comprising:

receiving first intraoral scan data of an intraoral site;

generating a digital three-dimensional model comprising the intraoral site based on the first intraoral scan data of the intraoral site;

receiving a user selection of a portion of the generated digital three-dimensional model;

locking the user selected portion of the generated digital three-dimensional model;

after locking the user selected portion of the generated digital three-dimensional model, receiving second intraoral scan data of the intraoral site, the second intraoral scan data overlapping with the first intraoral scan data; and

updating the generated digital three-dimensional model of the intraoral site with the second intraoral scan data, wherein a first portion of the second intraoral scan data that also depicts the locked portion of the generated digital three-dimensional model is not used for updating the generated digital three-dimensional model, and wherein a second portion of the second intraoral scan data is used for updating the generated digital three-dimensional model, the second portion of the second intraoral scan data being combined with the first intraoral scan data to account for discrepancies of overlapping data between the first intraoral scan data and the second intraoral scan data.

2. The method of claim **1**, wherein the second intraoral scan data is combined with the first intraoral scan data by applying a weighted average to overlapping data between the first intraoral scan data and the second intraoral scan data.

3. The method of claim **2**, wherein the first intraoral scan data has a higher weight than the second intraoral scan data.

4. The method of claim **1**, further comprising:

determining portions of the first intraoral scan data that depict the user selected portion of the generated digital three-dimensional model; and

locking the determined portions of the first intraoral scan data.

5. The method of claim **1**, further comprising:

identifying a preparation tooth in the generated digital three-dimensional model;

performing image processing on at least one of the generated digital three-dimensional model or the first intraoral scan data to determine a finish line for the preparation tooth; and

generating a contour based on the finish line, wherein the contour is a contour for the portion of the generated three-dimensional model, and wherein the user selected portion comprises data representing the preparation tooth within the finish line.

6. The method of claim **1**, further comprising:

analyzing the generated digital three-dimensional model relative to reference data;

identifying an anomaly in the generated digital three-dimensional model based on a result of the analyzing; and

providing an indication of the anomaly, wherein a border of the anomaly corresponds to a border of the portion of the generated digital three-dimensional model.

7. The method of claim **1**, further comprising:

determining an identity of a tooth represented by the generated digital three-dimensional model;

determining stored information associated with the identified tooth;

determining, based on the stored information, the portion of the generated digital three-dimensional model that represents the tooth; and

generating a contour for the portion of the generated digital three-dimensional model.

8. The method of claim **1**, wherein the user selected portion of the generated three-dimensional model surrounds an additional portion of the three-dimensional model that is not locked.

9. A non-transitory storage medium having instructions that, when executed by a processing device, cause the processing device to perform operations comprising:

receiving a first intraoral image data set that is associated with a first intraoral site;

determining that the first intraoral image data set is associated with the first intraoral site;

algorithmically performing the following by the processing device:

selecting, based at least in part on an identity of the first intraoral site, portions of intraoral images in the first intraoral image data set that depict the first intraoral site; and

locking at least the portions of the intraoral images in the first intraoral image data set;

receiving a second intraoral image data set that is not associated with the first intraoral site, wherein one or more intraoral images in the second intraoral image data set depict a second intraoral site and at least a portion of the first intraoral site; and

generating a model comprising the first intraoral site and the second intraoral site based on the first intraoral image data set and the second intraoral image data set, wherein generating the model comprises:

combining data from the intraoral images of the first intraoral image data set and data from the intraoral images of the second intraoral image data set;

wherein the locked portions of the intraoral images in the first intraoral image data set are used for a first region of the model, and wherein data from the second intraoral image data set that also depicts the first intraoral site is not used for the first region of the model.

10. The non-transitory storage medium of claim **9**, wherein one or more intraoral images in the first intraoral image data set depict at least a portion of the second intraoral site, the operations further comprising:

combining the data from the intraoral images in the first intraoral image data set with the data from the intraoral images in the second intraoral image data set in a manner that accounts for discrepancies of overlapping data for the second intraoral site between the intraoral images in the first intraoral image data set and the intraoral images in the second intraoral image data set.

11. The non-transitory storage medium of claim **9**, the operations further comprising:

assigning a first layer to the intraoral images in the first intraoral image data set;

assigning a second layer to the intraoral images in the second intraoral image data set;

assigning a first weight to the first layer; and

assigning a second weight to the second layer, wherein the first weight is higher than the second weight;

wherein the data from the intraoral images in the first intraoral image data set is combined with the data for the intraoral images of the second intraoral image data set by applying a weighted average to overlapping data between the intraoral images in the first intraoral image data set and the intraoral images of the second intraoral image data set, wherein the first weight assigned to the first layer and the second weight assigned to the second layer are used to apply the weighted average.

12. The non-transitory storage medium of claim **9**, wherein the first intraoral site comprises a preparation tooth, and wherein the first intraoral image data set comprises an identifier that identifies the first intraoral image data set as being associated with the preparation tooth, the operations further comprising performing the following responsive to determining that the first intraoral image data set is associated with the preparation tooth:

performing image processing on the intraoral images in the first intraoral image data set to determine, for the intraoral images in the first intraoral image data set, a finish line for the preparation tooth depicted in those intraoral images; and

determining portions of the intraoral images in the first intraoral image data set that are within the finish line, wherein the locked portions of the intraoral images in the first intraoral image data set that depict the first intraoral site correspond to the portions of the intraoral images that are within the finish line.

13. The non-transitory storage medium of claim **12**, the operations further comprising:

generating an offset of the finish line; and

determining portions of the intraoral images in the first intraoral image data set that are within the offset of the finish line, wherein the locked portions of the intraoral images in the first intraoral image data set that depict the first intraoral site correspond to the portions of the intraoral images that are within the offset of the finish line.

14. The non-transitory storage medium of claim **9**, the operations further comprising:

determining that the first intraoral site is associated with stored information;

analyzing the intraoral images in the first intraoral image data set in view of the stored information about the first intraoral site;

determining the portions of intraoral images in the first intraoral image data set that depict the first intraoral site based on a result of the analyzing; and

generating a contour of the first intraoral site in the intraoral images of the first intraoral image data set, wherein the contour is used to select the portions of the intraoral images in the first intraoral image data set that depict the first intraoral site.

15. A scanner system comprising:

a handheld scanner to generate first intraoral scan data of an intraoral site at a first time and to generate second intraoral scan data of the intraoral site at a later second time; and

a non-transitory storage medium having instructions that, when executed by a processor, cause the processor to:

receive the first intraoral scan data of the intraoral site;

generate a digital three-dimensional model comprising the intraoral site based on the first intraoral scan data of the intraoral site;

receive a user selection of a portion of the generated digital three-dimensional model;

lock the user selected portion of the generated digital three-dimensional model;

after locking the user selected portion of the generated digital three-dimensional model, receive the second intraoral scan data of the intraoral site, the second intraoral scan data overlapping with the first intraoral scan data; and

update the generated digital three-dimensional model of the intraoral site with the second intraoral scan data, wherein a first portion of the second intraoral scan data that also depicts the locked portion of the generated digital three-dimensional model is not used for updating the generated digital three-dimensional model, and wherein a second portion of the second intraoral scan data is used for updating the generated digital three-dimensional model, the second portion of the second intraoral scan data being combined with the first intraoral scan data to account for discrepancies of overlapping data between the first intraoral scan data and the second intraoral scan data.

16. The scanner system of claim **15**, wherein the second intraoral scan data is combined with the first intraoral scan data by applying a weighted average to overlapping data between the first intraoral scan data and the second intraoral scan data.

17. The scanner system of claim **16**, wherein the first intraoral scan data has a higher weight than the second intraoral scan data.

18. The scanner system of claim **15**, wherein the user selected portion of the generated three-dimensional model is surrounded by one or more additional portions of the generated three-dimensional model that are not locked.

19. The scanner system of claim **15**, wherein the instructions further cause the processor to:

identify a preparation tooth in the generated digital three-dimensional model;

perform image processing on at least one of the generated digital three-dimensional model or the first intraoral scan data to determine a finish line for the preparation tooth; and

generate a contour based on the finish line, wherein the contour is a contour for the portion of the generated three-dimensional model, and wherein the user selected portion comprises data representing the preparation tooth within the finish line.

20. The scanner system of claim **15**, wherein the instructions further cause the processor to:

determine an identity of a tooth represented by the generated digital three-dimensional model;

determine stored information associated with the identified tooth;

determine, based on the stored information, the portion of the generated digital three-dimensional model that represents the tooth; and

generate a contour for the portion of the generated digital three-dimensional model.

* * * * *