This international standard was developed in accordance with internationally recognized principles on standardization established in the Decision on Principles for the Development of International Standards, Guides and Recommendations issued by the World Trade Organization Technical Barriers to Trade (TBT) Committee.

Designation: D2240 – 15

Standard Test Method for Rubber Property—Durometer Hardness[1]

This standard is issued under the fixed designation D2240; the number immediately following the designation indicates the year of original adoption or, in the case of revision, the year of last revision. A number in parentheses indicates the year of last reapproval. A superscript epsilon (ε) indicates an editorial change since the last revision or reapproval.

This standard has been approved for use by agencies of the U.S. Department of Defense.

1. Scope

1.1 This test method covers twelve types of rubber hardness measurement devices known as durometers: Types A, B, C, D, DO, E, M, O, OO, OOO, OOO-S, and R. The procedure for determining indentation hardness of substances classified as thermoplastic elastomers, vulcanized (thermoset) rubber, elastomeric materials, cellular materials, gel-like materials, and some plastics is also described.

1.2 This test method is not equivalent to other indentation hardness methods and instrument types, specifically those described in Test Method D1415.

1.3 This test method is not applicable to the testing of coated fabrics.

1.4 All materials, instruments, or equipment used for the determination of mass, force, or dimension shall have traceability to the National Institute for Standards and Technology, or other internationally recognized organizations parallel in nature.

1.5 The values stated in SI units are to be regarded as standard. The values given in parentheses are for information only. Many of the stated dimensions in SI are direct conversions from the U. S. Customary System to accommodate the instrumentation, practices, and procedures that existed prior to the Metric Conversion Act of 1975.

1.6 *This standard does not purport to address all of the safety concerns, if any, associated with its use. It is the responsibility of the user of this standard to establish appropriate safety and health practices and determine the applicability of regulatory limitations prior to use.*

2. Referenced Documents

2.1 *ASTM Standards:*[2]

D374 Test Methods for Thickness of Solid Electrical Insulation (Withdrawn 2013)[3]
D618 Practice for Conditioning Plastics for Testing
D785 Test Method for Rockwell Hardness of Plastics and Electrical Insulating Materials
D1349 Practice for Rubber—Standard Conditions for Testing
D1415 Test Method for Rubber Property—International Hardness
D4483 Practice for Evaluating Precision for Test Method Standards in the Rubber and Carbon Black Manufacturing Industries
F1957 Test Method for Composite Foam Hardness-Durometer Hardness

2.2 *ISO Standard:*[4]

ISO/IEC 17025: 1999 General Requirements for the Competence of Testing and Calibration Laboratories

3. Summary of Test Method

3.1 This test method permits hardness measurements based on either initial indentation or indentation after a specified period of time, or both. Durometers with maximum reading indicators used to determine maximum hardness values of a material may yield lower hardness when the maximum indicator is used.

3.2 The procedures for Type M, or micro hardness durometers, accommodate specimens that are, by their dimensions or configuration, ordinarily unable to have their durometer hardness determined by the other durometer types described. Type M durometers are intended for the testing of specimens having a thickness or cross-sectional diameter of 1.25 mm (0.050 in.) or greater, although specimens of lesser dimensions may be successfully accommodated under the conditions specified in Section 6, and have a Type M durometer hardness range between 20 and 90. Those specimens which have a durometer hardness range other than specified shall use another suitable procedure for determining durometer hardness.

[1] This test method is under the jurisdiction of ASTM Committee D11 on Rubber and is the direct responsibility of Subcommittee D11.10 on Physical Testing.

Current edition approved Aug. 1, 2015. Published January 2016. Originally approved in 1964. Last previous edition approved in 2010 as D2240 – 05 (2010). DOI: 10.1520/D2240-15.

[2] For referenced ASTM standards, visit the ASTM website, www.astm.org, or contact ASTM Customer Service at service@astm.org. For *Annual Book of ASTM Standards* volume information, refer to the standard's Document Summary page on the ASTM website.

[3] The last approved version of this historical standard is referenced on www.astm.org.

[4] Available from International Organization for Standardization (ISO), 1 rue de Varembé, Case postale 56, CH-1211, Geneva 20, Switzerland.

Copyright © ASTM International, 100 Barr Harbor Drive, PO Box C700, West Conshohocken, PA 19428-2959. United States

Copyright by ASTM Int'l (all rights reserved); Tue May 9 13:08:59 EDT 2017
Downloaded/printed by
Bill Bouchard (Plan Tech Inc) pursuant to License Agreement. No further reproductions authorized.

ClearCorrect Exhibit 1059, Page 1 of 13

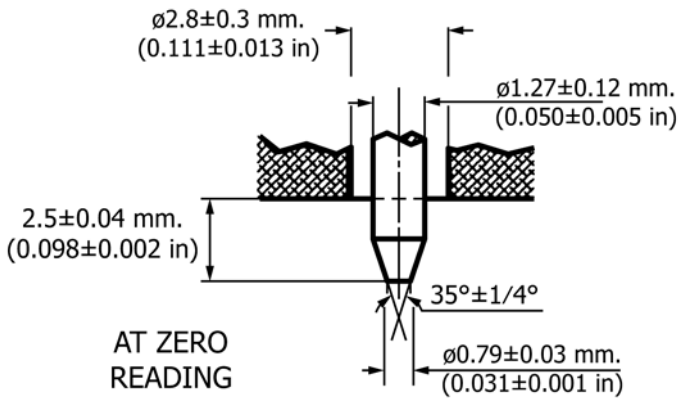

FIG. 1 (a) Type A and C Indentor

4. Significance and Use

4.1 This test method is based on the penetration of a specific type of indentor when forced into the material under specified conditions. The indentation hardness is inversely related to the penetration and is dependent on the elastic modulus and viscoelastic behavior of the material. *The geometry of the indentor and the applied force influence the measurements such that no simple relationship exists between the measurements obtained with one type of durometer and those obtained with another type of durometer or other instruments used for measuring hardness*. This test method is an empirical test intended primarily for control purposes. No simple relationship exists between indentation hardness determined by this test method and any fundamental property of the material tested. For specification purposes, it is recommended that Test Method D785 be used for materials other than those described in 1.1.

5. Apparatus

5.1 *Hardness Measuring Apparatus, or Durometer, and an Operating Stand*, Type 1, Type 2, or Type 3 (see 5.1.2) consisting of the following components:

5.1.1 *Durometer:*

5.1.1.1 *Presser Foot*, the configuration and the total area of a durometer presser foot may produce varying results when there are significant differences between them. It is recommended that when comparing durometer hardness determinations of the same type (see 4.1), that the comparisons be between durometers of similar presser foot configurations and total area, and that the presser foot configuration and size be noted in the Hardness Measurement Report (see 10.2.4 and 5.1.1.3).

5.1.1.2 *Presser Foot*, Types A, B, C, D, DO, E, O, OO, OOO, and OOO-S, with an orifice (to allow for the protrusion of the indentor) having a diameter as specified in Fig. 1 (a, b, c, d, e, f, and g), with the center a minimum of 6.0 mm (0.24 in.) from any edge of the foot. When the presser foot is not of a flat circular design, the area shall not be less than 500 mm^2 (19.7 $in.^2$).

NOTE 1—The Type OOO and the Type OOO-S, designated herein, differ in their indentor configuration, spring force, and the results obtained. See Table 1 and Fig. 1 (e and g).

5.1.1.3 *Presser Foot*—flat circular designs designated as Type *xR*, where *x* is the standard durometer designation and *R* indicates the flat circular press foot described herein, for example, Type *aR*, *dR*, and the like. The presser foot, having a centrally located orifice (to allow for the protrusion of the indentor) of a diameter as specified in Fig. 1 (a through g). The flat circular presser foot shall be 18 ± 0.5 mm (0.71 ± 0.02 in.) in diameter. These durometer types shall be used in an operating stand (see 5.1.2).

(a) Durometers having a presser foot configuration other than that indicated in 5.1.1.3 shall not use the Type *xR* designation, and it is recommended that their presser foot configuration and size be stated in the Hardness Measurement Report (see 10.2.4).

5.1.1.4 *Presser Foot, Type M*, with a centrally located orifice (to allow for the protrusion of the indentor), having a diameter as specified in Fig. 1 (d), with the center a minimum of 1.60 mm (0.063 in.) from any edge of the flat circular presser foot. The Type M durometer shall be used in a Type 3 operating stand (see 5.1.2.4).

5.1.1.5 *Indentor*, formed from steel rod and hardened to 500 HV10 and shaped in accordance with Fig. 1 (a, b, c, d, e, or g), polished over the contact area so that no flaws are visible under 20× magnification, with an indentor extension of 2.50 ± 0.04 mm (0.098 ± 0.002 in.).

5.1.1.6 *Indentor, Type OOO-S*, formed from steel rod and hardened to 500 HV10, shaped in accordance with Fig. 1 (f), polished over the contact area so that no flaws are visible under 20× magnification, with an indentor extension of 5.00 ± 0.04 mm (0.198 ± 0.002 in.).

5.1.1.7 *Indentor, Type M*, formed from steel rod and hardened to 500 HV10 and shaped in accordance with Fig. 1 (d), polished over the contact area so that no flaws are visible under 50× magnification, with an indentor extension of 1.25 ± 0.02 mm (0.049 ± 0.001 in.).

5.1.1.8 *Indentor Extension Indicator*, analog or digital electronic, having a display that is an inverse function of the indentor extension so that:

Copyright by ASTM Int'l (all rights reserved); Tue May 9 13:08:59 EDT 2017
Downloaded/printed by
Bill Bouchard (Plan Tech Inc) pursuant to License Agreement. No further reproductions authorized.

ClearCorrect Exhibit 1059, Page 2 of 13

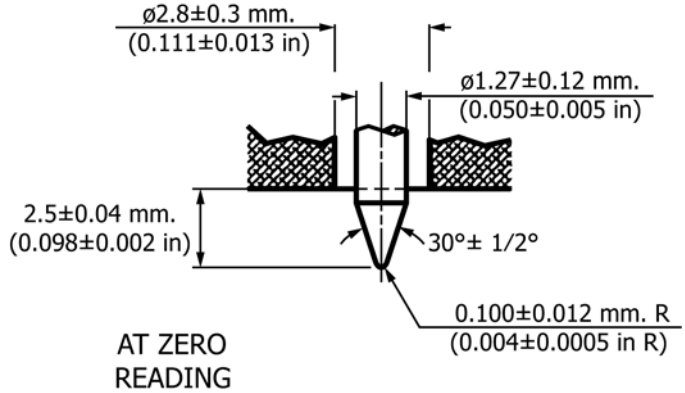

FIG. 1 (b) Type B and D Indentor *(continued)*

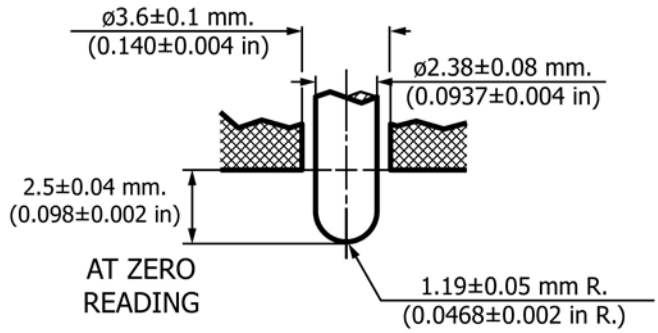

FIG. 1 (c) Type O, DO, and OO Indentor *(continued)*

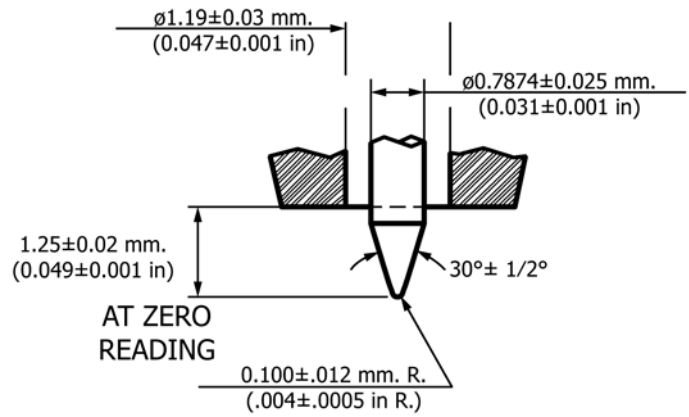

FIG. 1 (d) Type M Indentor *(continued)*

(1) The display shall indicate from 0 to 100 with no less than 100 equal divisions throughout the range at a rate of one hardness point for each 0.025 mm (0.001 in.) of indentor movement,

(2) The display for Type OOO-S durometers shall indicate from 0 to 100 with no less than 100 equal divisions throughout the range at a rate of one hardness point for each 0.050 mm (0.002 in.) of indentor movement,

(3) The display for Type M durometers shall indicate from 0 to 100 with no less than 100 equal divisions at a rate of one hardness point for each 0.0125 mm (0.0005 in.) of indentor movement, and

(4) In the case of analog dial indicators having a display of 360°, the points indicating 0 and 100 may be at the same point on the dial and indicate 0, 100, or both.

5.1.1.9 *Timing Device (optional)*, capable of being set to a desired elapsed time, signaling the operator or holding the hardness reading when the desired elapsed time has been reached. The timer shall be automatically activated when the presser foot is in contact with the specimen being tested, for example, the initial indentor travel has ceased. Digital electronic durometers may be equipped with electronic timing

Copyright by ASTM Int'l (all rights reserved); Tue May 9 13:08:59 EDT 2017
Downloaded/printed by
Bill Bouchard (Plan Tech Inc) pursuant to License Agreement. No further reproductions authorized.

ClearCorrect Exhibit 1059, Page 3 of 13

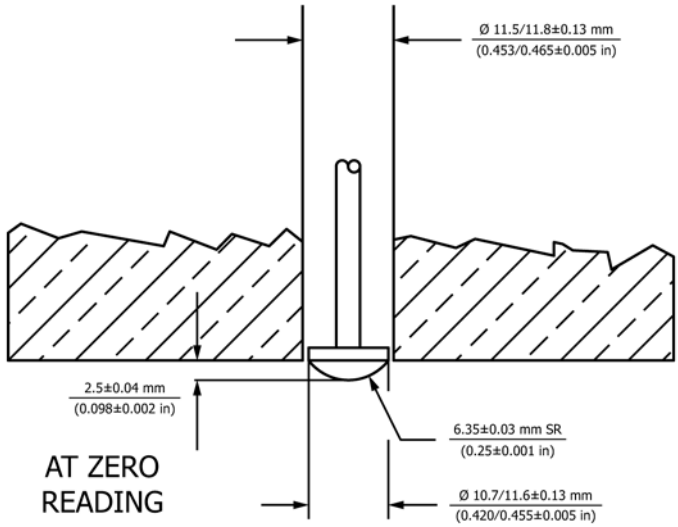

FIG. 1 (e) Type OOO Indentor *(continued)*

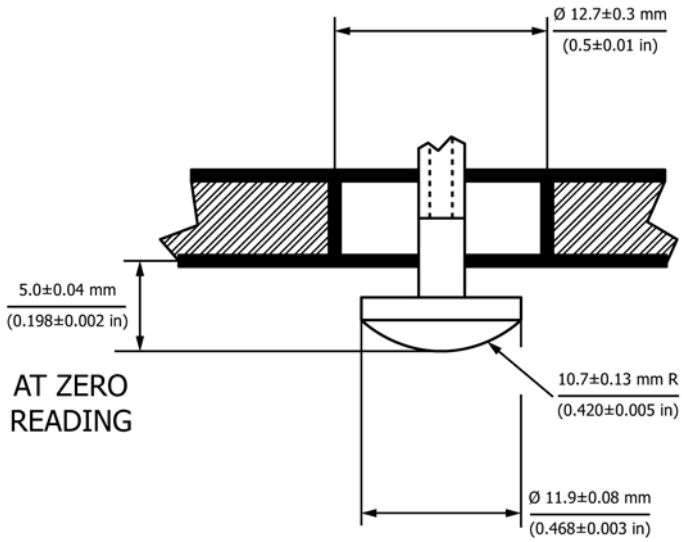

FIG. 1 (f) Type OOO-S Indentor *(continued)*

devices that shall not affect the indicated reading or determinations attained by more than one-half of the calibration tolerance stated in Table 1.

5.1.1.10 *Maximum Indicators (optional)*, maximum indicating pointers are auxiliary analog indicating hands designed to remain at the maximum hardness value attained until reset by the operator. Electronic maximum indicators are digital displays electronically indicating and maintaining the maximum value hardness valued achieved until reset by the operator.

5.1.1.11 Analog maximum indicating pointers have been shown to have a nominal effect on the values attained, however, this effect is greater on durometers of lesser total mainspring loads; for example, the effect of a maximum indicating pointer on Type D durometer determinations will be less than those determinations achieved using a Type A durometer. Analog style durometers may be equipped with maximum indicating pointers. The effect of a maximum indicating pointer shall be noted at the time of calibration in the calibration report (see 10.1.5), and when reporting hardness determinations (see 10.2.4). Analog Type M, OO, OOO, and Type OOO-S durometers shall not be equipped with maximum indicating pointers.

5.1.1.12 Digital electronic durometers may be equipped with electronic maximum indicators that shall not affect the indicated reading or determinations attained by more than one half of the spring calibration tolerance stated in Table 1.

5.1.1.13 *Calibrated Spring*, for applying force to the indentor, in accordance with Fig. 1 (a through g) and capable of applying the forces as specified in Table 1.

5.1.2 *Operating Stand (Fig. 2):*

5.1.2.1 Type 1, Type 2, and Type 3 shall be capable of supporting the durometer presser foot surface parallel to the specimen support table (Fig. 3) throughout the travel of each. The durometer presser foot to specimen support table parallelism shall be verified each time the test specimen support table is adjusted to accommodate specimens of varying dimensions. This may be accomplished by applying the durometer presser foot to the point of contact with the specimen support table and

Copyright by ASTM Int'l (all rights reserved); Tue May 9 13:08:59 EDT 2017
Downloaded/printed by
Bill Bouchard (Plan Tech Inc) pursuant to License Agreement. No further reproductions authorized.

ClearCorrect Exhibit 1059, Page 4 of 13

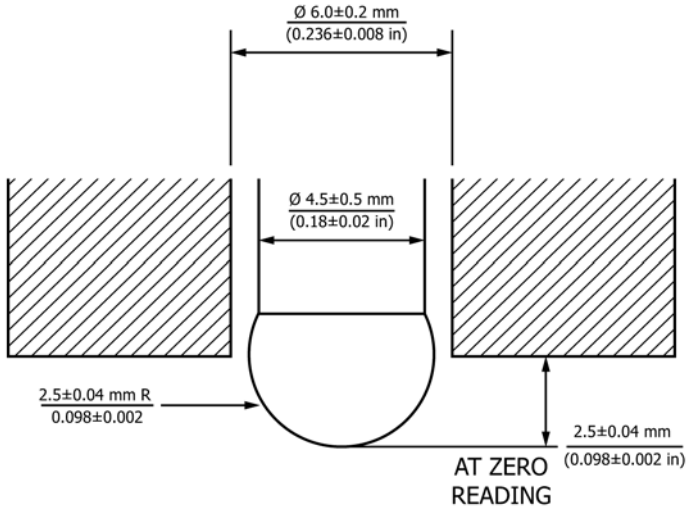

FIG. 1 (g) Type E Indentor *(continued)*

TABLE 1 Durometer Spring Force Calibration[A]
All Values are in N

Indicated Value	Type A, B, E, O	Type C, D, DO	Type M	Type OO, OOO	Type OOO-S
0	0.55	0	0.324	0.203	0.167
10	1.3	4.445	0.368	0.294	0.343
20	2.05	8.89	0.412	0.385	0.520
30	2.8	13.335	0.456	0.476	0.696
40	3.55	17.78	0.5	0.566	0.873
50	4.3	22.225	0.544	0.657	1.049
60	5.05	26.67	0.589	0.748	1.226
70	5.8	31.115	0.633	0.839	1.402
80	6.55	35.56	0.677	0.93	1.579
90	7.3	40.005	0.721	1.02	1.755
100	8.05	44.45	0.765	1.111	1.932
N/durometer unit	0.075	0.4445	0.0044	0.00908	0.01765
Spring Calibration Tolerance	± 0.075 N	± 0.4445 N	± 0.0176 N	± 0.0182 N	± 0.0353 N

[A] Refer to 5.1.1.3 for the Type *xR* designation.

making adjustments by way of the durometer mounting assembly or as specified by the manufacturer.

5.1.2.2 *Operating Stand, Type 1* (specimen to indentor type), shall be capable of applying the specimen to the indentor in a manner that minimizes shock.

5.1.2.3 *Operating Stand, Type 2* (indentor to specimen type), shall be capable of applying the indentor to the specimen in a manner that minimizes shock.

5.1.2.4 *Operating Stand, Type 3* (indentor to specimen type), hydraulic dampening, pneumatic dampening, or electromechanical (required for the operation of Type M durometers) shall be capable of controlling the rate of descent of the indentor to the specimen at a maximum of 3.2 mm/s (0.125 in./s) and applying a force sufficient to overcome the calibrated spring force as shown in Table 1. Manual application, Type 1 or Type 2 operating stands are not acceptable for Type M durometer operation.

5.1.2.5 The entire instrument should be plumb and level, and resting on a surface that will minimize vibration. Operating the instrument under adverse conditions will negatively affect the determinations attained.

5.1.2.6 *Specimen Support Table*, (Fig. 3) integral to the operating stand, and having a solid flat surface. The specimen support platform may have orifices designed to accept various inserts or support fixtures (Fig. 3) to provide for the support of irregularly configured specimens. When inserts are used to support test specimens, care must be taken to align the indentor to the center of the insert, or the point at which the indentor is to contact the specimen. Care should be exercised to assure that the indentor does not abruptly contact the specimen support table as damage to the indentor may result.

6. Test Specimen

6.1 The test specimen, herein referred to as "specimen" or "test specimen" interchangeably, shall be at least 6.0 mm (0.24 in.) in thickness unless it is known that results equivalent to the 6.0-mm (0.24-in.) values are obtained with a thinner specimen.

6.1.1 A specimen may be composed of plied pieces to obtain the necessary thickness, but determinations made on such specimens may not agree with those made on solid specimens, as the surfaces of the plied specimens may not be in complete contact. The lateral dimensions of the specimen shall be sufficient to permit measurements at least 12.0 mm (0.48 in.) from any edge, unless it is known that identical results are obtained when measurements are made at a lesser distance from an edge.

Copyright by ASTM Int'l (all rights reserved); Tue May 9 13:08:59 EDT 2017
Downloaded/printed by
Bill Bouchard (Plan Tech Inc) pursuant to License Agreement. No further reproductions authorized.

ClearCorrect Exhibit 1059, Page 5 of 13

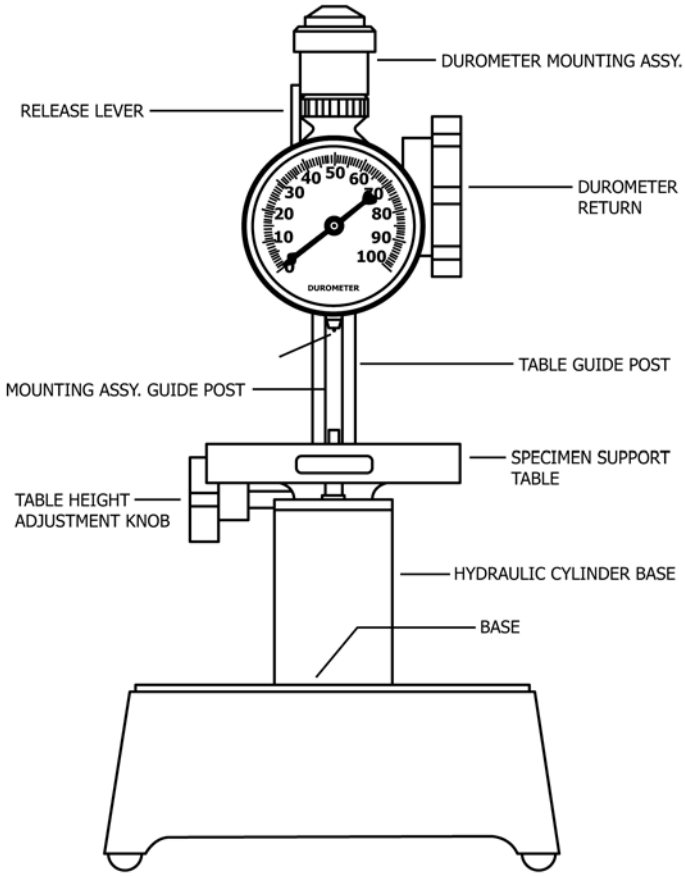

FIG. 2 Durometer Operating Stand

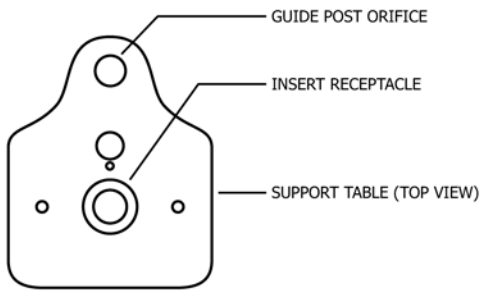

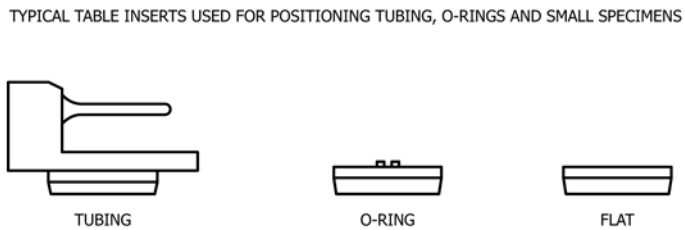

FIG. 3 Small Specimen Support Table

6.1.2 The surfaces of the specimen shall be flat and parallel over an area to permit the presser foot to contact the specimen over an area having a radius of at least 6.0 mm (0.24 in.) from the indentor point. The specimen shall be suitably supported to

Copyright by ASTM Int'l (all rights reserved); Tue May 9 13:08:59 EDT 2017
Downloaded/printed by
Bill Bouchard (Plan Tech Inc) pursuant to License Agreement. No further reproductions authorized.

ClearCorrect Exhibit 1059, Page 6 of 13

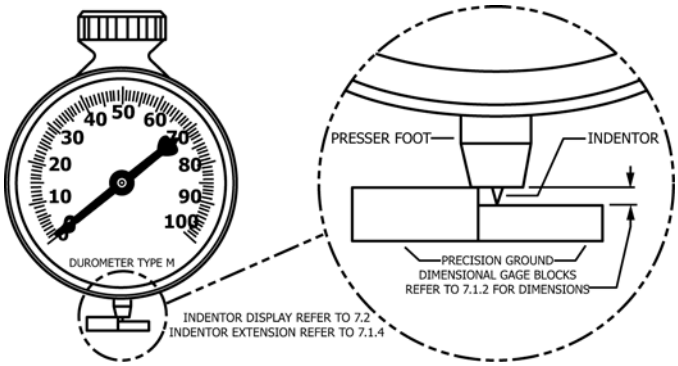

FIG. 4 Detail of Indentor Extension and Display Adjustment

provide for positioning and stability. *A suitable hardness determination cannot be made on an uneven or rough point of contact with the indentor.*

6.2 Type OOO, OOO-S, and M test specimens should be at least 1.25 mm (0.05 in.) in thickness, unless it is known that results equivalent to the 1.25-mm (0.05-in.) values are obtained with a thinner specimen.

6.2.1 A Type M specimen that is not of a configuration described in 6.2.2 may be composed of plied pieces to obtain the necessary thickness, but determinations made on such specimens may not agree with those made on solid specimens because the surfaces of the plied specimens may not be in complete contact. The lateral dimensions of the specimen should be sufficient to permit measurements at least 2.50 mm (0.10 in.) from any edge unless it is known that identical results are obtained when measurements are made at lesser distance from an edge. *A suitable hardness determination cannot be made on an uneven or rough point of contact with the indentor.*

6.2.2 The Type M specimen, when configured as an o-ring, circular band, or other irregular shape shall be at least 1.25 mm (0.05 in.) in cross-sectional diameter, unless it is known that results equivalent to the 1.25-mm (0.05-in.) values are obtained with a thinner specimen. The specimen shall be suitably supported in a fixture (Fig. 3) to provide for positioning and stability.

6.3 The minimum requirement for the thickness of the specimen is dependent on the extent of penetration of the indentor into the specimen; for example, thinner specimens may be used for materials having higher hardness values. The minimum distance from the edge at which measurements may be made likewise decreases as the hardness increases.

7. Calibration

7.1 *Indentor Extension Adjustment Procedure:*

7.1.1 Place precision ground dimensional blocks (Grade B or better) on the support table and beneath the durometer presser foot and indentor. Arrange the blocks so that the durometer presser foot contacts the larger block(s) and the indentor tip just contacts the smaller block (Fig. 4). It is necessary to observe the arrangement of the blocks and the presser foot/indentor under a minimum of 20× magnification to assure proper alignment.

7.1.2 Indentor extension and shape shall be in accordance with 5.1.1.5, 5.1.1.6, or 5.1.1.7, respective to durometer type. See Fig. 1 (a through g). Examination of the indentor under 20× magnification, 50× for Type M indentors, is required to examine the indentor condition. Misshapen or damaged indentors shall be replaced.

7.1.3 A combination of dimensional gage blocks shall be used to achieve a difference of 2.54 + 0.00/–0.0254 mm (0.100 + 0.00/–0.001 in.) between them. For Type OOO-S durometers, the gage block dimensions are 5.08 + 0.00/–0.0508 mm (0.200 + 0.00/–0.002 in.). For Type M durometers, the gage block dimensions are 1.27 + 0.0/–0.0127 mm (0.050 + 0.00/–0.0005 in.) between them (Fig. 4).

7.1.4 Carefully lower the durometer presser foot until it contacts the largest dimensional block(s), the indentor tip should just contact the smaller block, verifying full indentor extension.

7.1.5 Adjust the indentor extension to 2.50 ± 0.04 mm (0.098 ± 0.002 in.). For Type OOO-S durometers, adjust the indentor extension to 5.0 ± 0.04 mm (0.198 ± 0.002 in.). For Type M durometers, adjust the indentor extension to 1.25 ± 0.02 mm (0.049 ± 0.001 in.), following the manufacturer's recommended procedure.

7.1.5.1 When performing the procedures in 7.1, care should be used so as not to cause damage to the indentor tip. Fig. 4 depicts a suitable arrangement for gaging indentor extension.

7.1.6 Parallelism of the durometer presser foot to the support surface, and hence the dimensional gage blocks, at the time of instrument calibration, may be in accordance with Test Methods D374, Machinist's Micrometers, or otherwise accomplished in accordance with the procedures specified by the manufacturer.

7.2 *Indentor Display Adjustment:*

7.2.1 After adjusting the indentor extension as indicated in 7.1, use a similar arrangement of dimensional gage blocks to verify the linear relationship between indentor travel and indicated display at two points: 0 and 100. Following the manufacturer's recommendations, make adjustments so that:

7.2.2 The indicator displays a value equal to the indentor travel measured to within:

–0.0 +1.0 durometer units measured at 0;

±0.50 durometer units measured at 100;

±1 durometer units at all other points delineated in 7.4.

7.2.3 Each durometer point indicated is equal to 0.025 mm (0.001 in.) of indentor travel, except for:

7.2.3.1 Type M Durometers, each indicated point is equal to 0.0125 mm (0.0005 in.) of indentor travel;

7.2.3.2 Type OOO-S Durometers, each indicated point is equal to 0.050 mm (0.002 in.) of indentor travel.

7.2.4 The indicator shall not display a value greater than 100 or less than 0 at the time of calibration.

7.2.5 Other means of determining indentor extension or indentor travel, such as optical or laser measurement methods, are acceptable. The instrumentation used shall have traceability as described in 1.4.

7.2.6 The durometer shall be supported in a suitable fashion when performing the procedures described in 7.1 and 7.2.

7.3 *Calibration Device:*

Copyright by ASTM Int'l (all rights reserved); Tue May 9 13:08:59 EDT 2017
Downloaded/printed by
Bill Bouchard (Plan Tech Inc) pursuant to License Agreement. No further reproductions authorized.

ClearCorrect Exhibit 1059, Page 7 of 13

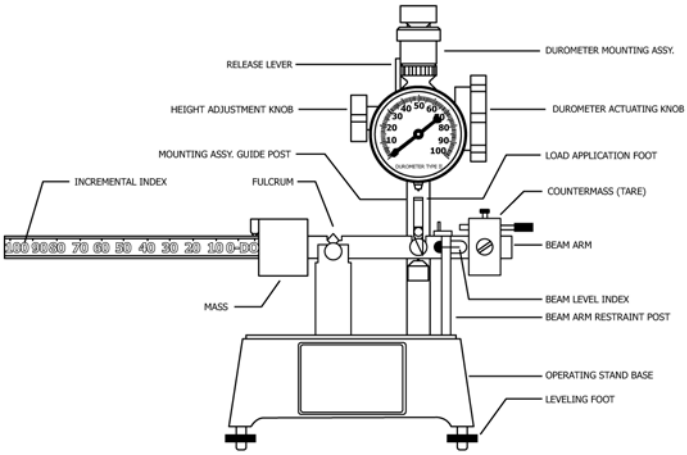

FIG. 5 Example of Durometer Calibration Apparatus

7.3.1 The durometer spring shall be calibrated by supporting the durometer in a calibrating device, see Fig. 5, in a vertical position and applying a measurable force to the indentor tip. The force may be measured by means of a balance as depicted in Fig. 5, or an electronic force cell. The calibrating device shall be capable of measuring applied force to within 0.5 % of the maximum spring force necessary to achieve 100 durometer units.

7.3.2 Care should be taken to ensure that the force is applied vertically to the indentor tip, as lateral force will cause errors in calibration. See 7.1.5.1 and 7.1.6.

7.4 *Spring Calibration*—The durometer spring shall be calibrated at displayed readings of 10, 20, 30, 40, 50, 60, 70, 80, and 90. The measured force (9.8× mass in kilograms) shall be within the spring calibration tolerance specified in Table 1. Table 1 identifies the measured force applied to the indentor for the entire range of the instrument, although it is necessary only to verify the spring calibration at points listed herein.

7.5 *Spring Calibration Procedure:*

7.5.1 Ensure that the indentor extension has been adjusted in accordance with 7.1, and the linear relationship between indentor travel and display is as specified in 7.2.

7.5.2 Place the durometer in the calibration device as depicted in Fig. 5. Apply the forces indicated in Table 1 so that forces applied are aligned with the centerline of the indentor in a fashion that eliminates shock or vibration and adjust the durometer according to manufacturers' recommendations so that:

7.5.3 At the points enumerated in 7.4, the display shall indicate a value equal to 0.025 mm (0.001 in.) of indentor travel. For Type OOO-S durometers, the display shall indicate a value equal to 0.05 mm (0.002 in.) of indentor travel. For Type M durometers, the display shall indicate a value equal to 0.0125 mm (0.0005 in.) of indentor travel within the spring calibration tolerances specified in 7.6.

7.6 Spring calibration tolerances are ±1.0 durometer units for Types A, B, C, D, E, O, and DO, ±2.0 durometer units for Types OO, OOO, and OOO-S, and ±4.0 durometer units for Type M, while not indicating below 0 or above 100 at the time of calibration (see Table 1).

7.7 *Spring Force Combinations:*

7.7.1 For Type A, B, E, and O durometers:
Force, N = 0.55 + 0.075 HA
Where HA = hardness reading on Type A, B, E, and O durometers.

7.7.2 For Type C, D, and DO durometers:
Force, N = 0.4445 HD
Where HD = hardness reading on Type C, D, and DO durometers.

7.7.3 For Type M durometers:
Force, N = 0.324 + 0.0044 HM
Where HM = hardness reading on Type M durometers.

7.7.4 For Type OO and OOO durometers:
Force, N = 0.203 + 0.00908 HOO
Where HOO = hardness reading on Type OO durometers.

7.7.5 For Type OOO-S durometers:
Force, N = 0.167 + 0.01765 HOOO-S
Where HOOO-S = hardness reading on Type OOO-S durometers.

7.8 The rubber reference block(s) provided for verifying durometer operation and state of calibration are not to be relied upon as calibration standards. The calibration procedures outlined in Section 7 are the only valid calibration procedures.

7.8.1 The use of metal reference blocks is no longer recommended (see Note 2).

7.9 Verifying the state of durometer calibration, *during routine use*, may be accomplished by:

7.9.1 Verifying that the zero reading is no more than 1 indicated point above zero, and not below zero (on durometers so equipped), when the durometer is positioned so that no external force is placed upon the indentor.

7.9.2 Verifying that the 100 reading is no more than 100 and no less than 99 when the durometer is positioned on a flat surface of a non-metallic material so that the presser foot is in complete contact, causing the indentor to be fully retracted.

7.9.2.1 It is important that when performing the verification of 100, as described in 7.9.2, that extreme care be taken so as to not cause damage to the indentor. Verification of the 100 value is not recommended for durometers having a spring force greater than 10 N (Types C, D, and DO).

7.9.2.2 When performing the verification of 100, as described in 7.9.2, the non-metallic material shall be of a hardness value greater than 100 of the type (scale) of the durometer being employed. Tempered glass of a thickness greater than 6.35 mm (0.25 in.) has been found satisfactory for this application.

7.9.3 Verifying the displayed reading at any other point using commercially available rubber reference blocks which are certified to a stated value of the type (scale) of the durometer being employed. The displayed value of the durometer should be within ±2 durometer points of the reference block's stated value.

7.9.4 Verification of the zero and 100 readings of a durometer provide reasonable assurance that the linear relationship between the indicated display and the durometer mechanism remain valid.

Copyright by ASTM Int'l (all rights reserved); Tue May 9 13:08:59 EDT 2017
Downloaded/printed by
Bill Bouchard (Plan Tech Inc) pursuant to License Agreement. No further reproductions authorized.

ClearCorrect Exhibit 1059, Page 8 of 13

7.9.5 Verification of points between zero and 100 provide reasonable assurance that the curvilinear relationship between the indicated display and the durometer mechanism remain valid.

7.9.6 *This is not a calibration procedure, it is a means by which a user may routinely verify that the durometer may be functioning correctly.* (See Note 2.)

8. Laboratory Atmosphere and Test Specimen Conditioning

8.1 Tests shall be conducted in the standard laboratory atmosphere, as defined in Practice D618, Section 4.2.

8.2 The instrument shall be maintained in the standard laboratory atmosphere, as defined in Practice D618, Section 4.1, for 12 h prior to performing a test.

8.3 The specimen shall be conditioned in accordance with condition 40/23 exclusive of humidity control, as described in Practice D618, Section 8.1, Procedure A and tested under the same conditions, exclusive of humidity control.

8.4 These procedures may be modified if agreed upon between laboratories or between supplier and user and are in accordance with alternative procedures identified in Practice D618.

8.5 No conclusive evaluation has been made on durometers at temperatures other than 23.0 ± 2.0°C (73.4 ± 3.6°F). Conditioning at temperatures other than the above may show changes in calibration. Durometer use at temperatures other than the above should be decided locally (see Practice D1349).

9. Procedure

9.1 *Operating Stand Operation (Type 3 Operating Stand Required for Type M):*

9.1.1 Care shall be exercised to minimize the exposure of the instrument to environmental conditions that are adverse to the performance of the instrument, or adversely affect test results.

9.1.2 Adjust the presser foot to support table parallelism as described in 5.1.2.1. It is necessary to make this adjustment each time the support table is moved to accommodate specimens of varying dimensions.

9.1.3 Prior to conducting a test, adjust the vertical distance from the presser foot to the contact surface of the test specimen to 25.4 ± 2.5 mm (1.00 ± 0.100 in.), unless it is known that identical results are obtained with presser foot at a greater or lesser vertical distance from the test specimen contact surface, or if otherwise stipulated by the manufacturer.

9.1.4 Place the specimen on the specimen support table, in a manner that the contact point of the indentor is in accordance with Section 6, unless it is known that identical results are obtained when measurements are made with the indentor at a lesser distance from the edge of the test specimen.

9.1.5 Actuate the release lever (Fig. 2) of the operating stand or activate the electromechanical device, allowing the durometer to descend at a controlled rate and apply the presser foot to the specimen in accordance with 5.1.2. In the case of "specimen to indentor" type operating stands, operate the lever or other mechanism to apply the specimen to the indentor in a manner that assures parallel contact of the specimen to the durometer presser foot without shock and with just sufficient force to overcome the calibrated spring force as shown in Table 1.

9.1.6 An operating stand that applies the mass at a controlled rate of descent, without shock is mandatory for Type M durometers. Hand-held application or the use of a Type 1 or Type 2 operating stand for the Type M durometer is not an acceptable practice, see 5.1.2.4.

9.1.7 For any material covered in 1.1, once the presser foot is in contact with the specimen, for example, when the initial indentor travel has ceased, the maximum indicated reading shall be recorded. The time interval of 1 s, between initial indentor travel cessation and the recording of the indicated reading, shall be considered standard. Other time intervals, when agreed upon among laboratories or between supplier and user, may be used and reported accordingly. The indicated hardness reading may change with time.

9.1.7.1 If the durometer is equipped with an electronic maximum indicator or timing device (refer to 5.1.1.9) the indicated reading shall be recorded within 1 ± 0.3 s of the cessation of indentor travel and reported (refer to 10.2.9 for reporting protocols), unless otherwise noted.

9.1.7.2 If the durometer is equipped with an analog type maximum indicator (refer to 5.1.1.10), the maximum indicated reading may be recorded and shall be reported (refer to 10.2.9), unless otherwise noted.

9.1.7.3 If the durometer is not equipped with the devices described in 5.1.1.9 or 5.1.1.10, the indicated reading shall be recorded within 1 s as is possible and reported (refer to 10.2.9), unless otherwise noted.

9.1.8 Make five determinations of hardness at different positions on the specimen at least 6.0 mm (0.24 in.) apart, 0.80 mm (0.030 in.) apart for Type M; and calculate the arithmetic mean, or alternatively calculate the median. The means of calculating the determinations shall be reported according to 10.2.8

9.2 *Manual (Hand Held) Operation of Durometer:*

9.2.1 Care shall be exercised to minimize the exposure of the instrument to environmental conditions that are adverse to the performance of the instrument, or adversely affect test results.

9.2.2 Place the specimen on a flat, hard, horizontal surface. Hold the durometer in a vertical position with the indentor tip at a distance from any edge of the specimen as described in Section 6, unless it is known that identical results are obtained when measurements are made with the indentor at a lesser distance.

9.2.3 Apply the presser foot to the specimen, maintaining it in a vertical position keeping the presser foot parallel to the specimen, with a firm smooth downward action that will avoid shock, rolling of the presser foot over the specimen, or the application of lateral force. Apply sufficient pressure to assure firm contact between the presser foot and the specimen.

9.2.4 For any material covered in 1.1, after the presser foot is in contact with the specimen, the indicated reading shall be recorded within 1 ± 0.1 s, or after any period of time agreed upon among laboratories or between supplier and user. If the

Copyright by ASTM Int'l (all rights reserved); Tue May 9 13:08:59 EDT 2017
Downloaded/printed by
Bill Bouchard (Plan Tech Inc) pursuant to License Agreement. No further reproductions authorized.

ClearCorrect Exhibit 1059, Page 9 of 13

TABLE 2 Type 1 Precision—Type M Durometer Method

Material		Within Laboratories			Between Laboratories		
	MEAN	Sr^A	r^B	$(r)^C$	SR^D	R^E	$(R)^F$
1	31.8	1.26	3.58	11.24	3.76	10.63	33.41
2	40.8	1.14	3.23	7.90	2.47	7.00	17.13
3	54.0	0.975	2.76	5.11	2.38	6.73	12.46
4	62.8	0.782	2.21	3.52	2.24	6.34	10.10
5	70.9	0.709	2.01	2.83	0.974	2.76	3.89
6	80.6	1.686	4.77	5.92	1.61	4.56	5.65
7	87.7	1.15	3.25	3.71	2.63	7.45	8.50
8	32.4	0.947	2.68	8.26	3.64	10.29	31.73
9	41.8	0.797	2.26	5.40	2.23	6.31	15.11
10	53.3	0.669	1.89	3.55	2.29	6.49	12.17
11	63.2	0.485	1.37	2.17	2.19	6.20	9.80
12	69.6	0.737	2.09	3.00	0.99	2.80	4.02
13	78.3	0.784	2.22	2.84	1.04	2.94	3.75
14	87.6	1.121	3.17	3.62	2.65	7.49	8.55
15	34.1	0.85	2.40	7.05	1.84	5.20	15.25
16	42.3	0.635	1.80	4.25	1.20	3.39	8.01
17	54.6	0.56	1.59	2.90	2.15	6.09	11.15
18	62.9	1.12	3.17	5.04	1.47	4.16	6.61
19	70.3	0.689	1.95	2.77	0.944	2.67	3.80
20	81.7	0.483	1.37	1.67	1.10	3.10	3.80
21	87.9	0.879	2.49	2.83	2.07	5.86	6.67
AVERAGE	61.4						
POOLED VALUES		0.924	2.62	4.26	2.146	6.07	9.89

[A] *Sr* = repeatability standard deviation, measurement units.
[B] *r* = repeatability = 2.83 × *Sr*, measurement units.
[C] (*r*) = repeatability, relative, (that is, in percent).
[D] *SR* = reproducibility standard deviation, measurement units.
[E] *R* = reproducibility = 2.83 × *SR*, measurement units.
[F] (*R*) = reproducibility, relative, (that is, in percent).

TABLE 3 Type 1 Precision—Type A Durometer Method

Material	Average Level	Within Laboratories			Between Laboratories		
		Sr^A	r^B	$(r)^C$	SR^D	R^E	$(R)^F$
1	51.4	0.646	1.83	3.56	1.56	4.41	8.59
2	65.3	0.878	2.48	3.81	2.21	6.06	9.27
3	68.0	0.433	1.23	1.80	2.28	6.45	9.49
Pooled	61.6	0.677	1.92	3.11	2.018	5.72	9.28

[A] *Sr* = repeatability standard deviation, measurement units.
[B] *r* = repeatability = 2.83 × *Sr*, measurement units.
[C] (*r*) = repeatability, relative, (that is, in percent).
[D] *SR* = reproducibility standard deviation, measurement units.
[E] *R* = reproducibility = 2.83 × *SR*, measurement units.
[F] (*R*) = reproducibility, relative, (that is, in percent).

TABLE 4 Type 1 Precision—Type D Durometer Method

Material	Average Level	Within Laboratories			Between Laboratories		
		Sr^A	r^B	$(r)^C$	SR^D	R^E	$(R)^F$
1	42.6	0.316	0.894	2.10	2.82	7.98	18.7
2	54.5	0.791	2.24	4.11	3.54	10.0	18.4
3	82.3	1.01	2.86	3.47	3.54	10.0	12.2
Pooled	59.8	0.762	2.16	3.61	3.32	9.40	15.7

[A] *Sr* = repeatability standard deviation, measurement units.
[B] *r* = repeatability = 2.83 × *Sr*, measurement units.
[C] (*r*) = repeatability, relative, (that is, in percent).
[D] *SR* = reproducibility standard deviation, measurement units.
[E] *R* = reproducibility = 2.83 × *SR*, measurement units.
[F] (*R*) = reproducibility, relative, (that is, in percent).

durometer is equipped with a maximum indicator, the maximum indicated reading shall be recorded within 1 ± 0.1 s of the cessation of initial indentor travel. The indicated hardness reading may change with time.

9.2.5 Make five determinations of hardness at different positions on the specimen at least 6.0 mm (0.24 in.) apart and calculate the arithmetic mean, or alternatively calculate the median. The means of calculating the determinations shall be reported according to 10.2.8.

9.3 It is acknowledged that durometer readings below 20 or above 90 are not considered reliable. It is suggested that readings in these ranges not be recorded.

9.4 Manual operation (handheld) of a durometer will cause variations in the results attained. Improved repeatability may be obtained by using a mass, securely affixed to the durometer and centered on the axis of the indentor. Recommended masses are 1 kg for Type A, B, E, and O durometers, 5 kg for Type C, D, and DO durometers, and 400 g for Type OO, OOO, and OOO-S durometers. The introduction of an additional mass on Type M durometers is not permitted. Further improvement may be achieved by the use of a durometer operating stand that controls the rate of descent of the durometer presser foot to the test specimen and incorporates the masses described above.

10. Report

10.1 *Instrument Calibration Report (Durometer or Operating Stand):*

10.1.1 Date of calibration.

10.1.2 Date of last calibration.

10.1.3 Calibration due date (see Note 2).

10.1.4 Manufacturer, type, model, and serial number of the instrument, and a notation when a maximum indicator or timing device is present.

10.1.5 Values obtained (pre- and post-calibration results), including a notation of the effect of a maximum indicator, if present. The method of reporting the calibrated value shall be by attaining the arithmetic mean of the determinations.

10.1.6 Ambient temperature.

10.1.7 Relative humidity.

10.1.8 Technician identification.

10.1.9 Applicable standards to which the instrument is calibrated.

10.1.10 Calibrating instrument information to include type, serial number, manufacturer, date of last calibration, calibration due date (see Note 2), and a statement of traceability of standards used to NIST or other acceptable organization. See 1.4.

10.2 *Hardness Measurement Report:*

10.2.1 Date of test.

10.2.2 Relative humidity.

10.2.3 Ambient temperature.

10.2.4 Manufacturer, type, and serial number of the durometer or operating stand, or both, including a notation when a maximum indicator or timing device is present, date of last calibration, and calibration due date (see Note 2).

NOTE 2—The calibration interval (calibration due date) for a durometer is to be determined by the user, based upon frequency of use, severity of conditions, environmental factors, and other variables.

Periodic checking of the operation and state of durometer calibration using commercially available rubber test blocks (refer to 7.8), specifically designed for this purpose, is recommended.

An instrument that has been exposed to severe shock, is visibly damaged, produces test determinations more than 2 points different from calibrated rubber test blocks or other reference standard, or is otherwise

Copyright by ASTM Int'l (all rights reserved); Tue May 9 13:08:59 EDT 2017
Downloaded/printed by
Bill Bouchard (Plan Tech Inc) pursuant to License Agreement. No further reproductions authorized.

ClearCorrect Exhibit 1059, Page 10 of 13

suspected of unreliability, should be removed from service and returned to a qualified calibration facility.

A calibration interval of one year is recommended for durometer test blocks and durometer instruments that are infrequently used, more often for others.

The calibration interval for instruments and peripheral devices employed in the calibration of durometers is to be determined by the calibration service provider. It is recommended that the protocols outlined in ISO/IEC 17025, as required by the manufacturer, and those to which the service is provided, be followed.

10.2.5 Means of testing, whether manual (hand held), Type 1 operating stand (specimen to indentor), Type 2 operating stand (indentor to specimen type), or Type 3 operating stand (electromechanical or hydraulically dampened).

10.2.6 Description of test specimen, including thickness, number of pieces plied if less than the thickness indicated in Section 6, including the vulcanization date.

10.2.7 Complete identification of material tested.

10.2.8 Hardness value obtained and method of calculation, either arithmetic mean or alternatively, the median.

10.2.9 Indentation hardness time interval at which determination was made. Readings may be reported in the form: M/60/1 where M is the type of durometer, 60 the reading, and 1 the time in seconds that the presser foot is in contact with the specimen or from an electronic timing device.

11. Precision and Bias

11.1 These precision and bias statements have been prepared in accordance with Practice D4483. Refer to this Practice for terminology and other testing and statistical concepts.

11.2 The Type 1 precision for the Type M method was determined from an interlaboratory program with 21 materials of varying hardness, with six participating laboratories. Tests were conducted on two separate days in each laboratory for the Type M testing program. All materials were supplied from a single source, being those commonly supplied as reference materials with the instruments from the manufacturer.

11.3 The precision results in this precision and bias section give an estimate of the precision of this test method with the materials (rubbers) used in the particular interlaboratory program as described above. The precision parameters should not be used for acceptance or rejection testing, or both, of any group of materials without documentation that they are applicable to those particular materials and the specific testing protocols that include this test method.

11.4 The Type 1 precision for both Type A and D methods was determined from an interlaboratory program with 3 materials of varying hardness, with six participating laboratories. Tests were conducted on two separate days in each laboratory for both A and D testing programs. All materials were supplied from a single source.

11.5 A test result for hardness, for Types A, D, and M, was the median of five individual hardness readings on each day in each laboratory.

11.6 Table 2 shows the precision results for Type M method,[5] Table 3 shows the precision results for Type A method,[6] and Table 4 gives the precision results for Type D method.[6]

11.7 *Precision*—The precision of this test method may be expressed in the format of the following statements which use as appropriate value r, R, (r), or (R), that is, that value to be used in decisions about test results (obtained with the test method). The appropriate value is that value of r or R associated with a mean level in Table 1 closest to the mean level under consideration (at any given time, for any given material) in routine testing operations.

NOTE 3—A Type 1 precision statement for Types E, OOO, OOO-S, and R have not yet been made available.

11.7.1 *Repeatability*—The repeatability, r, of these test methods has been established as the appropriate value tabulated in Tables 2-4. Two single test results, obtained under normal test method procedures, that differ by more than this tabulated r (for any given level) must be considered as derived from different or non-identical sample populations.

11.7.2 *Reproducibility*—The reproducibility, R, of these test methods has been established as the appropriate value tabulated in Tables 2-4. Two single test results obtained in two different laboratories, under normal test method procedures, that differ by more than the tabulated R (for any given level) must be considered to have come from different or non-identical sample populations.

11.7.3 Repeatability and reproducibility are expressed as a percentage of the mean level, (r) and (R), and have equivalent application statements as above for r and R. For the (r) and (R) statements, the difference in the two single test results is expressed as a percentage of the arithmetic mean of the two test results.

11.8 *Bias*—In test method terminology, bias is the difference between an average test value and the reference (or true) test property value. Reference values do not exist for this test method since the value (of the test property) is exclusively defined by this test method. Bias, therefore cannot be determined.

12. Keywords

12.1 durometer; durometer hardness; hardness; indentation hardness; micro durometer hardness

[5] Supporting data have been filed at ASTM International Headquarters and may be obtained by requesting Research Report RR:D11-1091.

[6] Supporting data have been filed at ASTM International Headquarters and may be obtained by requesting Research Report RR:D11-1029.

Copyright by ASTM Int'l (all rights reserved); Tue May 9 13:08:59 EDT 2017
Downloaded/printed by
Bill Bouchard (Plan Tech Inc) pursuant to License Agreement. No further reproductions authorized.

ClearCorrect Exhibit 1059, Page 11 of 13

APPENDIXES

(Nonmandatory Information)

X1. DUROMETER SELECTION GUIDE

X1.1 The durometer selection guide is designed to assist in the selection of the proper durometer type for various applications.

X1.2 It is generally recognized that durometer hardness determination below 20 and above 90 are unreliable. It is recommended that the next lower or higher type (scale) be used in these situations.

X1.3 It is also recommended that, whenever possible, an operating stand be employed in performing durometer hardness tests.

TABLE X1.1 Durometer Selection: Typical Uses

Type (Scale)	Typical Examples of Materials Tested	Durometer Hardness (Typical Uses)
A	Soft vulcanized rubber, natural rubber, nitriles, thermoplastic elastomers, flexible polyacrylics and thermosets, wax, felt, and leathers	20–90 A
B	Moderately hard rubber, thermoplastic elastomers, paper products, and fibrous materials	Above 90 A Below 20 D
C	Medium-hard rubber, thermoplastic elastomers, medium-hard plastics, and thermoplastics	Above 90 B Below 20 D
D	Hard rubber, thermoplastic elastomers, harder plastics, and rigid thermoplastics	Above 90 A
DO	Moderately hard rubber, thermoplastic elastomers, and very dense textile windings	Above 90 C Below 20 D
M	Thin, irregularly shaped rubber, thermoplastic elastomer, and plastic specimens	20–85 A
O	Soft rubber, thermoplastic elastomers, very soft plastics and thermoplastics, medium-density textile windings	Below 20 DO
OO	Extremely soft rubber, thermoplastic elastomers, sponge, extremely soft plastics and thermoplastics, foams, low-density textile windings, human and animal tissue	Below 20 O
CF	Composite foam materials, such as amusement ride safety cushions, vehicle seats, dashboards, headrests, armrests, and door panels	See Test Method F1957

X2. RELATED TEST METHODS[2]

C367 Test Methods for Strength Properties of Prefabricated Architectural Acoustical Tile or Lay-In Ceiling Panels

C473 Test Methods for Physical Testing of Gypsum Panel Products

C581 Practice for Determining Chemical Resistance of Thermosetting Resins Used in Glass-Fiber-Reinforced Structures Intended for Liquid Service

C661 Test Method for Indentation Hardness of Elastomeric-Type Sealants by Means of a Durometer

C836 Specification for High Solids Content, Cold Liquid-Applied Elastomeric Waterproofing Membrane for Use with Separate Wearing Course

D461 Test Methods for Felt

D531 Test Method for Rubber Property—Pusey and Jones Indentation

D619 Test Methods for Vulcanized Fibre Used for Electrical Insulation

D1037 Test Methods for Evaluating Properties of Wood-Base Fiber and Particle Panel Materials

D1054 Test Method for Rubber Property—Resilience Using a Goodyear-Healey Rebound Pendulum

D1414 Test Methods for Rubber O-Rings

D1474 Test Methods for Indentation Hardness of Organic Coatings

D2134 Test Method for Determining the Hardness of Organic Coatings with a Sward-Type Hardness Rocker

D2287 Specification for Nonrigid Vinyl Chloride Polymer and Copolymer Molding and Extrusion Compounds

D2583 Test Method for Indentation Hardness of Rigid Plastics by Means of a Barcol Impressor

D2632 Test Method for Rubber Property—Resilience by Vertical Rebound

D4289 Test Method for Elastomer Compatibility of Lubricating Greases and Fluids

Copyright by ASTM Int'l (all rights reserved); Tue May 9 13:08:59 EDT 2017
Downloaded/printed by
Bill Bouchard (Plan Tech Inc) pursuant to License Agreement. No further reproductions authorized.

ClearCorrect Exhibit 1059, Page 12 of 13

D5672 Test Method for Flexible Cellular Materials Measurement of Indentation Force Deflection Using a 25-mm (1-in.) Deflection Technique

D6546 Test Methods for and Suggested Limits for Determining Compatibility of Elastomer Seals for Industrial Hydraulic Fluid Applications

F1151 Test Method for Determining Variations in Hardness of Film Ribbon Pancakes

NOTE X2.1—The hardness testing of other nonmetallic materials may be under the jurisdiction of one or more ASTM committees; the respective committee should be contacted for specific information.

ASTM International takes no position respecting the validity of any patent rights asserted in connection with any item mentioned in this standard. Users of this standard are expressly advised that determination of the validity of any such patent rights, and the risk of infringement of such rights, are entirely their own responsibility.

This standard is subject to revision at any time by the responsible technical committee and must be reviewed every five years and if not revised, either reapproved or withdrawn. Your comments are invited either for revision of this standard or for additional standards and should be addressed to ASTM International Headquarters. Your comments will receive careful consideration at a meeting of the responsible technical committee, which you may attend. If you feel that your comments have not received a fair hearing you should make your views known to the ASTM Committee on Standards, at the address shown below.

This standard is copyrighted by ASTM International, 100 Barr Harbor Drive, PO Box C700, West Conshohocken, PA 19428-2959, United States. Individual reprints (single or multiple copies) of this standard may be obtained by contacting ASTM at the above address or at 610-832-9585 (phone), 610-832-9555 (fax), or service@astm.org (e-mail); or through the ASTM website (www.astm.org). Permission rights to photocopy the standard may also be secured from the Copyright Clearance Center, 222 Rosewood Drive, Danvers, MA 01923, Tel: (978) 646-2600; http://www.copyright.com/

Copyright by ASTM Int'l (all rights reserved); Tue May 9 13:08:59 EDT 2017
Downloaded/printed by
Bill Bouchard (Plan Tech Inc) pursuant to License Agreement. No further reproductions authorized.

ClearCorrect Exhibit 1059, Page 13 of 13