UNITED STATES PATENT AND TRADEMARK OFFICE

BEFORE THE PATENT TRIAL AND APPEAL BOARD

CLEARCORRECT OPERATING, LLC,
Petitioner,

v.

ALIGN TECHNOLOGY, INC.,
Patent Owner.

Case No. IPR2025-00819
Patent No. 11,154,384

PATENT OWNER'S RESPONSE

TABLE OF CONTENTS

I. INTRODUCTION 1

II. OVERVIEW OF '384 PATENT 3

III. CITED PRIOR ART 5

A. Tadros (EX1003) 6

B. Kalili (EX1005) and Texin 990R (EX1009) 7

C. Porter (EX1006) 8

D. Wen (EX1008) 9

IV. PERSON OF ORDINARY SKILL IN THE ART 10

V. CLAIM CONSTRUCTION 11

VI. PETITIONER'S GROUNDS OF UNPATENTABILITY FAIL 11

A. Ground 1 Fails to Show that Claims 1-4, 7-14, 17-24, and 27-30 Were Obvious over Tadros, Kalili, and Texin 990R 12

1. Ground 1's Combination Fails to Provide a Co-Polyester as Claimed 13

2. Petitioner's Hindsight Combination is Contradictory and Self-Defeating Regarding Mechanical Properties 17

3. Petitioner Combines Tadros, Kalili and Texin 990R Based on False Assertions and Hindsight, not Logical Motivation 21

B. Ground 2 Fails to Show that Claims 1-2, 4, 6-12, 14, 16-22, 24, and 26-30 Were Obvious over Kalili, Porter, Wen, and Texin 990R 28

1. Wen Fails to Support Ground 2's Subdivision of Layers of a Multilayer Sheet 29

2. Ground 2's Reliance on Porter is not Justified 34

3. Ground 2 Fails to Justify Its Use of Adhesive Lamination 45

4. Petitioner's Hindsight Combination is Contradictory and Self-Defeating Regarding Mechanical Properties 48

C. Objective Evidence of Nonobviousness Supports the Patentability of Claims 1-4, 6-14, 16-24, and 26-30 48

1. Aligners Made with SmartTrack Have Nexus to the Challenged Claims 49

2. SmartTrack Aligners Show Unexpectedly Superior Performance 54

3. SmartTrack Aligners Are Commercially Successful.....56

4. Petitioner Copied Align's SmartTrack Aligners.....58

VII. THE PETITION FAILS TO NAME ALL REAL PARTIES-IN-INTEREST 62

VIII. CONCLUSION 64

IX. APPENDIX – EXHIBIT LIST.....65

I. INTRODUCTION

ClearCorrect Operating LLC ("ClearCorrect" or "Petitioner") challenges claims 1-4, 6-14, 16-24, and 26-30 of U.S. Patent No. 11,154,384 ("the '384 patent," EX1001) based on two grounds. Pet., 6. Petitioner here has failed to meet its burden of proof and Align Technology, Inc. ("Align" or "Patent Owner") respectfully requests the Board issue a final written decision rejecting Petitioner's challenge.

The challenged claims here were the result of over five years of development and the testing of over two hundred potential materials. Align, a company founded by two Stanford graduates, revolutionized the dental world by developing Invisalign® aligners that were an alternative to braces, despite deep skepticism from the dental community. But Align did not stop there – instead it continued to be on the bleeding-edge of developing aligners that would address a myriad of desired characteristics. Now, with widespread adoption of Align's patented breakthroughs by Petitioner and others, Petitioner raises obviousness challenges that are an exercise in contradictions, misinterpret the relied-upon references, and are easily overcome by the strong secondary considerations set forth in the developed record.

As to contradictions, the petition takes inconsistent positions regarding predictability in multilayer aligner materials. On the one hand, the petition argues

that alterations to materials in a multilayer aligner had unpredictable effects on aligner properties and efficacy, but then treats multilayer materials as though their components could be predictably varied at will. Petitioner's expert asserts that replacing a layer of polycarbonate with any other polymer would be unpredictable, but that his own proposal would have been predictable. Petitioner's contradictions reflect a fundamental misunderstanding of prior-art polymers and techniques, and Petitioner proposes hindsight-driven combinations with features that would have discouraged, not motivated, a POSITA from pursuing them.

While Petitioner's grounds all have intrinsic fatal flaws, objective indicia additionally confirm the claims' non-obviousness. Align's SmartTrack material, used to manufacture its Invisalign® aligners embodying the claims, showed unexpected superiority over the best-performing prior-art aligner material, including superiority to the asserted prior-art material. The commercial success of these Invisalign® aligners made with SmartTrack material (herein, "SmartTrack aligners") further confirms the non-obviousness of the claims, as does the widespread industry adoption of the patented invention, including copying of SmartTrack by Petitioner and its related companies. Petitioner's hindsight-based, internally contradictory attack cannot withstand record evidence showing Align's SmartTrack material, as recited in the challenged claims, was a significant and innovative advancement in the field of dental aligner treatment.

For these reasons, and as discussed below, the Board should find that Petitioner has not met its burden to prove that the challenged claims are unpatentable.

II. OVERVIEW OF '384 PATENT

The '384 patent and its family members are the product of an intensive research and development process. Align pioneered the field of clear plastic orthodontic appliances called "aligners," a substitute for braces. Since its launch in 1997, Align has been the segment leader in the United States and throughout the world. EX2016, ¶¶5-9, 38.

Align's early aligners were manufactured using a polycarbonate material called Proceed30 (or PC30). However, in 2001 Align moved to aligners made from a polyurethane material called EX30. EX30 performed better than PC30, with better stress-strain curves and greater force-delivery capacity. Accordingly, from 2001 until 2013, polyurethane aligners dominated the market. EX2016, ¶¶7-9.

In an effort to further improve upon EX30, Align engaged in an extensive development process for next-generation aligners. Align's objective was to identify materials providing improved overall properties including increased stress-relaxation and comparable or superior performance in other parameters including modulus of elasticity, elongation, polymer thermal-mechanical properties, durability, environmental stress cracking, transparency, thermoforming adaptation,

and thermoformability. EX2016, ¶¶10-13, 21-25.

Over more than five years, Align tested over two hundred fifty candidate materials sourced from numerous commercial suppliers across the polymer industry, comparing them to EX30 and to each other. Eventually, Align identified certain material combinations—with certain properties—that had strong performance as compared to EX30. Its chosen commercial product, SmartTrack (or "ST30"), exhibited excellent properties when testing candidate materials and further demonstrated substantial improvement in orthodontic treatment relative to the best prior aligner material, EX30, in clinical trials. EX2016, ¶¶21-37. The '384 patent claims encompass SmartTrack. EX2014, ¶¶125-127, 136; EX2016, ¶¶14-20.

The '384 patent describes "[m]ultilayer orthodontic positioning appliances" that "apply forces to a tooth to generate movement of the tooth" to improve the positioning of a patient's teeth. EX1001, 3:4-9. The multilayer appliances can have three or more layers configured to provide improved aligner performance, reducing the need for additional aligners or mid-course correction during treatment. *See* EX1001, 2:3-11, 3:13-29; EX2014, ¶¶24-25.

The '384 patent describes that a multilayer appliance can include "a hard polymer layer" and "a soft polymer layer," and either of these can include additional layers of polymeric material. EX1001, 5:21-24, 6:38-53. The layers can be formed of different materials, including a hard co-polyester layer and one or

more soft layers formed of a thermoplastic polyurethane elastomer. EX1001, 6:33-38. The ’384 patent describes forming dental aligners by thermoforming a multilayer sheet over “a positive model of the patient’s teeth in a target position” to fabricate an “appliance as a negative of the positive model.” EX1001, 3:49-57; *see id.*, Figs. 3-4 EX2014, ¶26.

The claims are directed to dental appliances made from a multilayer polymeric material, with independent claim 1 reciting a dental appliance with “a plurality of tooth-receiving cavities shaped to receive and resiliently reposition” a patient’s teeth, with the appliance having “three or more polymer layers.” EX1001, claim 1. Claim 1 specifies that the three or more layers of the sheet comprise “a hard polymer layer comprising a co-polyester and having a flexural modulus greater than about 150,000 psi” and “a soft polymer layer comprising a thermoplastic polyurethane elastomer” with elongation at break greater than 200% and hardness from about 60 A to about 85 D. *Id.* Independent claims 11 and 21 recite a plurality of appliances also having such a multilayer structure. EX1001, claims 11, 21; EX2014, ¶27.

III. CITED PRIOR ART

Petitioner relies on five references (Tadros, Kalili, Texin 990R, Porter, and Wen) to challenge the ’384 patent claims. Petitioner’s obviousness conclusion is contaminated by repeated misunderstandings of the applied references and reliance

on “teachings” absent from the cited art. By understanding what each reference teaches and importantly, what it does not teach, Petitioner’s errors become readily apparent. EX2014, ¶28.

A. Tadros (EX1003)

Ground 1 relies on Tadros as allegedly disclosing “a ‘soft-hard-soft’ dental appliance that uses a hard inner polymer layer comprising a copolyester and two soft outer polymer layers comprising a thermoplastic polyurethane (‘TPU’) elastomer.” *See* Pet., 2, 6. As will be detailed more below, these contentions regarding Tadros’s disclosure are riddled with errors, including a false assertion that PCCD is a copolyester, which infect and render deficient the entirety of Petitioner’s obviousness case.

Tadros describes “an appliance for use in an oral cavity” comprising “a polymeric shell that comprises a polymeric mixture,” which Tadros explains is a mixture of “two or more thermoplastic polymers.” EX1003, Abstract, [0022]. This “polymeric mixture” is what the petition maps to the “hard polymer layer” recited in the claims. *See* Pet., 32. To satisfy the claim requirement that this layer includes “a co-polyester,” the petition relies exclusively on Tadros’s “exemplary polycarbonate-PCCD [*i.e.*, poly(1,4-cyclohexane-dimethanol-1,4-cyclohexanedicarboxylate)] mixtures (Samples 4 and 5).” *Id.*, 33 (citing EX1003, [0093], Table 2).

Tadros describes PCCD "as a "cycloaliphatic polyester." EX1003, [0022], [0024] ("polycarbonate-cycloaliphatic polyester mixture"), [0050]-[0051] ("A preferred cycloaliphatic polyester is PCCD…."). Tadros describes PCCD as being formed by "recurring units of" a single monomer, making PCCD a homopolymer, not a copolyester. EX1003, [0050].

The petition also relies on Tadros's disclosure that "the appliance may comprise additional layers disposed upon the sheet comprising the polymeric mixture." EX1003, [0073]. The petition claims Tadros describes these layers as "preferably 'elastomers,' such as 'polyurethanes'" (Pet, 34), but Tadros never describes polyurethanes as preferred. The only elastomer Tadros calls preferred is the copolyester ether "ECDEL 9966." EX1003, [0073]. Tadros mentions polyurethane once among 30 different categories of elastomers that are "[s]uitable." *Id.*; EX2014, ¶¶29-31.

B. Kalili (EX1005) and Texin 990R (EX1009)

Kalili describes "[a]n invisible removable orthodontic repositioning appliance" having a soft inner lining and a hard outer lining (i.e., two layers). *See, e.g.*, EX1005, Abstract, [0007], [0009]. Kalili identifies Texin 990R as a polyurethane material that can form the inner lining. *Id.*, [0069]. Relying on a product datasheet for Texin 990R, Petitioner alleges that Texin 990R satisfies the material properties of the claimed "soft polymer layer." *See* Pet., 35-37.

For its outer lining, Kalili discloses that while this layer may be formed of polycarbonates, numerous other materials alternatively may be used, including BPA-free materials. *See* EX1005, [0053] (identifying "polyacetates, polyolefins, polyamides, polystyrenes…"). Nowhere does Kalili describe copolyesters as suitable for an aligner. EX2014, ¶¶32-33.

C. Porter (EX1006)

Porter is an article titled "Dishwasher Safe: New Clear Copolyester Is Tougher, More Heat-Resistant, and Processes Easier, Too." EX1006, 60. Porter describes a particular copolyester material, Tritan TX 1000, as suitable for kitchenware and other consumer products. *See* EX1006, 5-6, FIG. 2. Porter identifies Tritan as particularly suitable for thick-walled consumer products designed for holding food and water, such as CamelBack water bottles, Vita-Mix blenders, and a "thick-walled soup bowl," all of which are injection-molded. EX1006, 8-9. Porter also highlights Tritan's improved resistance to heat, hydrolytic and chemical attack, and applied stress in response to environmental conditions found in dishwashers. *Id.*, 6.

While Porter mentions in passing that Tritan can be thermoformed or extruded into a sheet or flat film, it never discusses forming Tritan into multilayered sheets or combining Tritan with other polymers. *See* EX1006, 6, 7. Porter also never mentions any orthodontic or dental applications. Indeed, Porter's

Tritan TX1000 was known only as a consumer-grade plastic, not a medical-grade plastic. *See* EX1118, 7-8; EX2014, ¶¶34-35.

D. Wen (EX1008)

Wen describes a particular manufacturing approach to thermoforming a multilayer dental aligner. *See* EX1008, [0205]-[0213]. The process involves vacuum-forming a heated sheet of a first layer over a patient's physical tooth model such that the softened sheet conforms to the shape of the physical model. EX1008, [0205]. A heated sheet of a second layer can then be vacuum-formed on top of the first to produce a two-layered aligner. EX1008, [0206], Figs. 13-14; EX2014, ¶36.

Petitioner relies on Wen as allegedly teaching that if a multilayer sheet has thinner sublayers, this will improve conformance to tooth models and help layers bond to each other. *See* Pet., 4, 54-56. However, this is inaccurate, as the disclosure Petitioner cites to (paragraphs 212-13) is not discussing thermoforming a multilayer sheet, but a different approach using multiple thinner single-layer sheets.

Wen teaches that "rather than forming a dental aligner by a thick layer of the same aligner-making material, the aligner is formed by a plurality of thinner layers of aligner-making material using vacuum-forming." EX1008, [0212]. In other words, Wen teaches successively heating and vacuum-forming thin sheets onto a

tooth model, one atop the other. EX2014, ¶37. Because each individual thin layer has greater flexibility, Wen explains the thinner layers will "more easily conform[] to the physical tooth models than a single thick layer." EX1008, [0212]; EX2014, ¶37. Wen notes that this process can include forming an appliance using sheets of different materials since "[t]hinner films allow more intimate contact between polymer sheets and therefore help bond the films to one another." EX1008, [0213]; EX2014, ¶37.

IV. PERSON OF ORDINARY SKILL IN THE ART

Petitioner contends:

> A POSITA would have had at least a four-year undergraduate degree in materials science, mechanical engineering, chemical engineering, or a related field and at least two years of experience in the field of polymer science, combined with at least two years of experience in the field of design, manufacture, and processing of thermoformable polymer sheets for use in various applications, such as in orthodontic and dental appliances. Additional education could substitute for professional experience and vice versa.

Pet., 18-19. Patent Owner's expert, Dr. Robert Kimmel, met and exceeded this level of ordinary skill by May 14, 2012. EX2014, ¶¶1-14, 38-40.

On cross-examination, Dr. Osswald confirmed that under his definition, the POSITA would not need experience with orthodontic and dental appliances. *See* EX2017, 80:7-81:22 (qualifying experience encompasses whole territory of

thermoforming). In IPR2022-01214, the patent owner there (Bay Materials, a real party-in-interest here (*see infra*, section VII.)) argued a POSITA would further have "some dental aligner experience" or access to "orthodontist or dentists with such experience." EX2025 (POR) at 8-9; *see also* EX2033 (FWD) at 8-11 (agreeing). In contrast to Dr. Osswald, Dr. Kimmel's opinions are informed by the declaration of Yan Chen, a co-inventor of the '384 patent with approximately 20 years of experience in orthodontic-appliance development. EX2014, ¶41; *see* EX2016, ¶¶1-4, 11-12.

V. CLAIM CONSTRUCTION

A claim subject to *inter partes* review receives its plain and ordinary meaning, interpreted in light of the specification. *See* 37 C.F.R. § 42.100(b); EX2014, ¶42. Petitioner proposes no claim constructions. Pet., 27-28. Petitioner asserts its claim mappings are informed by Align's infringement contentions (*id.*), but as discussed below, Petitioner's arguments based on these contentions fail.

VI. PETITIONER'S GROUNDS OF UNPATENTABILITY FAIL

The petition advances two grounds alleging obviousness of the '384 patent claims. Ground 1 alleges that claims 1-4, 7-14, 17-24, and 27-30 would have been obvious over Tadros in view of Kalili and further in view of Texin 990R. Pet., 6. Ground 2 alleges that claims 1-2, 4, 6-12, 14, 16-22, 24, and 26-30 would have been obvious over Kalili in view of Porter, further in view of Wen, and still further

Texin 990R. *Id.* As discussed below, each of Petitioner's grounds fails.

A. Ground 1 Fails to Show that Claims 1-4, 7-14, 17-24, and 27-30 Were Obvious over Tadros, Kalili, and Texin 990R

Ground 1 proposes replacing layers in a multilayer sheet used to form a dental appliance, taught by Tadros, with a different material (a soft thermoplastic polyurethane elastomer disclosed by Kalili and Texin 990R) and altering the process by which the sheet is formed by introducing polymeric tie layers to employ adhesive lamination. *See* Pet., 34-38. The petition illustrates how it picks and chooses among different references to produce its proposed combination as reproduced below:

Pet., 34. Petitioner applies the same arguments for each independent claim. *See* Pet., 44-45, 48.

Petitioner fails to meet its burden to demonstrate the unpatentability of these claims. To begin with, Petitioner's combination fails to satisfy the limitations of the independent claims, as Petitioner fails to show that the materials it relies on to satisfy the hard polymer layer limitations are a copolyester or that the result of its combination satisfies the recited mechanical properties. Moreover, the petition

advances a hindsight-tainted combination that is inconsistent with its admission that the change it proposes would have been unpredictable. Petitioner's combination also relies on using adhesive lamination as essential to meet the claim elements, yet Petitioner fails to show that a POSITA would have been motivated to employ adhesive lamination as it argues.

1. Ground 1's Combination Fails to Provide a Co-Polyester as Claimed

Each independent claim recites a dental appliance with three or more polymer layers including a "hard polymer layer comprising a co-polyester and having a flexural modulus greater than about 150,000 psi" (element 1[c]/11[b]/21[d]/21[i]). Petitioner's combination fails to satisfy this limitation. Petitioner argues PCCD is a co-polyester, but the record, including their own expert's deposition testimony, demonstrates their conclusory assertion is wrong.

To satisfy this limitation, Petitioner relies on samples 4 and 5 in Tadros, which are a mixture of polycarbonate and poly(1,4-cyclohexane-dimethanol-1,4-cyclohexanedicarboxylate) (PCCD). Pet., 32-33 (citing EX1003, [0050]). To satisfy the claimed mechanical properties (e.g., flexural modulus greater than 150,000 psi), Petitioner relies exclusively on these "exemplary hard polymeric mixtures" of PCCD (i.e., samples 4 and 5), arguing that a POSITA would have selected those particular mixtures in making an aligner. *See* Pet., 33-34 ("A POSITA therefore would have understood that Tadros discloses that the polymeric

mixtures in Samples 4 and 5 have a flexural modulus 'greater than about 150,000 psi.'"); EX2014, ¶¶43-47.

Petitioner's bare claim that PCCD is a copolyester finds no support in the petition. The petition cites to paragraph 50 of Tadros, but paragraph 50 describes PCCD as a "cycloaliphatic polyester," not a copolyester. EX1003, [0050]. The other paragraphs cited by petitioner characterize PCCD only as a polyester. *See* EX1003, [0022] ("polyesters such as…PCCD"), [0024]. Nowhere does Tadros identify PCCD as a copolyester, because it is not. EX2014, ¶¶48-49.

The petition also cites to Dr. Osswald, but he merely asserts, without supporting evidence, that PCCD is a copolyester. EX1007, ¶173. Cross-examination confirmed, however, that Dr. Osswald's conclusory statement in his declaration was based on an erroneous assumption, not on the reasoned analysis of a POSA.

When asked to explain his understanding regarding copolyesters, Dr. Osswald confirmed his incorrect assumption that not only PCCD, but all cycloaliphatic polyesters were copolyesters:

22 Q Is it your understanding that all cycloaliphatic
23 polyesters are copolyesters?
24 A To my knowledge, yes.

EX2017, 22:22-24. When further pressed regarding his belief, Dr. Osswald insisted

that “I think it’s also clear what type of copolyesters were used by Tadros in his mixtures with polycarbonate,” that this assumption applied to “the specific examples from Tadros that” he cited, and that “What I do know is Tadros’s mixtures do contain polycarbonate and copolyesters.” EX2017, 23:18-24:8; EX2014, ¶48.

However, as Dr. Kimmel explains, the material relied on by the petition fails to satisfy the hard polymer layer limitations of the independent claims at least because PCCD is not a copolyester. EX2014, ¶49. A polyester is a polymer formed of repeating monomer units, with each monomer formed from the reaction of a dicarboxylic acid (or an esterified dicarboxylic acid) and a diol. *Id.*; *see* EX1003, [0048]. A copolyester is a copolymer of a polyester that may be formed by using multiple different kinds of diacids or diols, producing different monomer units. EX2014, ¶¶49-50. By contrast, a polyester that is a homopolymer, meaning a polymer not composed of different kinds of monomer units, is not a copolyester. *Id.*; *see also* EX2020, 173 (distinguishing homopolymers and copolymers).

When asked regarding his understanding of polyesters and copolyesters, Dr. Osswald conceded that a copolyester must be “polymerized with different monomers.” EX2017, 104:7-105:17. He also confirmed that not all polyesters were copolyesters, and that a copolyester must have a “molecular structure [that] is more complex than just a single type of molecule.” EX2017, 104:7-105:17. As discussed

below, this testimony is inconsistent with his assertion that PCCD, shown by Tadros with only one type of monomer unit, is a copolyester. EX2014, ¶50-53.

Tadros describes PCCD as a "cycloaliphatic polyester…having recurring units of formula (VIII)," shown below:

(VIII)

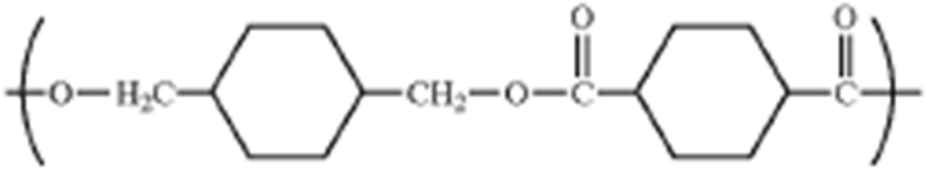

EX1003, [0050]. This recurring unit is a single monomer, meaning that PCCD is a homopolymer, not a copolymer, and accordingly not a copolyester. EX2014, ¶50. Indeed, the prior art specifically confirms that PCCD is a homopolymer. *See* EX2019, 4101, table 6; EX2014, ¶50; *see also* EX1003, [0073] (describing separate examples of a "copolyester ether" elastomer and "PCCD," which is not described as a copolyester).

Tadros's description of the process of forming PCCD confirms that it is only a polyester, not a copolyester. EX2014, ¶51. Tadros specifically describes producing PCCD not only as a homopolymer made of monomer units of the same kind, but also one in which each monomer unit is stereochemically identical. *Id.*; *see* EX1003, [0045] (describing all-trans PCCD as "especially preferred"). As Dr. Kimmel explains, even PCCD formed from different isomers of the monomer unit

shown in formula VIII would be considered a homopolymer, and thus a polyester, but not a copolyester. EX2014, ¶51-52. Indeed, the prior art specifically characterized such mixed-isomer embodiments of PCCD as a "homopolymer," and thus not a copolyester. *Id*. (citing EX2019, 4101, table 6).

Tadros never indicates the PCCD used in its samples involves a mix of monomer units. To the contrary, Tadros expressly describes PCCD as having a single recurring unit according to formula VIII. EX1003, [0050]; EX2014, ¶50. Tadros describes PCCD, including the PCCD used in samples 4 and 5, only as a polyester, not a copolyester. EX2014, ¶52; *see* EX1003, [0050]-[0051], [0093], claim 5. Accordingly, a POSITA following Petitioner's express proposal for ground 1 of using a polycarbonate-PCCD mix based on samples 4 and 5 would necessarily fail to meet the independent claims' hard copolyester element, as Petitioner has failed to establish that Tadros's PCCD is a copolyester, which is flatly contradicted by Tadros's express disclosure. EX2014, ¶53.

2. Petitioner's Hindsight Combination is Contradictory and Self-Defeating Regarding Mechanical Properties

Each independent claim recites a "hard polymer layer…having a flexural modulus greater than about 150,000 psi" (elements 1[c]/11[b]/21[d]/21[i]) and a "soft polymer layer…having an elongation break of greater than about 200%, and a hardness from about 60 A to about 85 D" (elements 1[d]/11[c]/21[e]/21[j]). Petitioner fails to prove that its proposed combination of different layers cherry-

picked from Tadros, Kalili and Texin 990R would provide the claimed mechanical properties.

Throughout the petition materials, Petitioner argues that mechanical properties of individual layers change significantly and unpredictably based on both layer configuration as well as methods to combine and fabricate the multilayer sheet. *See, e.g.*, Pet., 1 (discussing "the layer configuration's impact on a dental aligner's properties and efficacy"), 36 ("the mechanical properties of a polymer (or free film) can change when the polymer is combined in a multilayer sheet"); *see also* EX1007, ¶¶31, 104 n.2, 151. In its obviousness challenge, however, Petitioner proposes combining different layers of Tadros, Kalili and Texin 990R specifically using "adhesive lamination," which Petitioner conveniently claims would "preserve" the mechanical properties of the individual Texin 990R polymer layer. Pet. 36; EX1007, ¶¶31, 39-41. This artificially crafted litigation argument lacks requisite support and fails to withstand scrutiny.

Petitioner distinguishes between adhesive lamination and other multilayer fabrication methods by arguing that adhesive lamination "would preserve the desirable mechanical properties reported for the TEXIN 990R polymer," citing to Dr. Osswald, who asserts that adhesive lamination "does not lead to molecular diffusion or cross-linking between the layers." Pet., 36 (citing EX1007, ¶¶31, 39-42, 151, 174); EX1007, ¶31. But this lacks any supporting evidence. Paragraph ¶31

of Dr. Osswald's declaration offers nothing beyond conclusory, *ipse dixit* commentary—not a single piece of objective evidence is identified in support. 37 C.F.R. §42.65(a) ("Expert testimony that does not disclose the underlying facts or data on which the opinion is based is entitled to little or no weight."); *Upjohn Co. v. Mova Pharm. Corp.*, 225 F.3d 1306, 1311 (Fed. Cir. 2000) (expert testimony lacking factual support is "of little probative value").

Elsewhere, Dr. Osswald offers contradictory testimony and evidence. For example, Dr. Osswald cites Ebnesajjad (EX1042) as discussing adhesive lamination (e.g., EX1007, ¶¶40-41) but omits that Ebnesajjad discusses such lamination as including penetration of adhesive into porous surfaces for "mechanical interlocking" of materials as well as chemical bonding including "**cross-linking**." EX1042, 8, 11-13.[1] Yet at ¶35, Dr. Osswald contends that this type of "**crosslinking**, molecular diffusion, or molecular entanglement, can influence the mechanical properties of both the polymer layers and the overall multilayer polymer sheet." EX1007, ¶35; *see id.*, ¶31. Similarly, while Dr. Osswald cites "**molecular diffusion**" as another factor that can "change the properties of polymers within a layer," Ebnesajjad discusses developing adhesion through "**interdiffusion of molecules** between the adhesive and adherend."

[1] Emphasis added unless otherwise noted.

Compare id., ¶31 *with* EX1042, 12; *see also* EX1042, 13 ("The interactions that hold the adhesive and the adherends together may receive contributions from … diffusion."); EX2014, ¶¶109-10.

Petitioner's argument and evidence elsewhere do not support its false narrative. For example, the petition cites ¶¶39-41 of Dr. Osswald's declaration where he discusses certain aspects of adhesive lamination. Pet. 36 (citing EX1007, ¶¶39-42). Notably absent, however, is discussion of the prior assertion regarding adhesive lamination and mechanical properties of adhered layers. Instead, Petitioner's cited art, Ebnesajjad (EX1042), describes adhesive lamination as including harsh surface modification techniques, mechanical blasting and material removal, chemical etching using corrosive chemicals, as well as heat melting and scorching. *See, e.g.*, EX1042, 8-9, 59. Ebnesajjad specifically identifies aspects such as surface modification and preparation as altering the properties of the polymer materials. *See, e.g.*, *id.*, 72 ("This technique can alter the physical and chemical properties of the surface."), 59 ("Bulk methods involve additives, blending, or recrystallization, all of which affect the bulk properties of plastics."); EX1019, 155-56 (interlayer interactions affect material properties); EX2014, ¶111.

Accordingly, Petitioner and its expert offer conflicting argument that does little beyond sabotage the petition assertion that the multilayer configuration would provide the mechanical properties recited in the challenged claims. Petitioner chose

to construct an obviousness case based on walking a concocted tightrope between assertions of mechanical property alterations and convenient (though unsupported) exceptions. Petitioner's narrative collapses under the weight of its own argument and evidence and should be rejected as such. And the corresponding obviousness assertion should now be recognized as self-defeating.

3. Petitioner Combines Tadros, Kalili and Texin 990R Based on False Assertions and Hindsight, not Logical Motivation

Petitioner also fails to show that a POSITA would have been motivated to combine the teachings of Tadros, Kalili, and Texin 990R as proposed. As discussed, Petitioner proposes combining, using adhesive lamination, two polyurethane layers of Texin 990R and Kalili together with the PCCD/polycarbonate material of Tadros to produce the arrangement shown below:

Pet., 34-38. As to alleged motivation, the petition argues 1) Tadros and Kalili address similar subject matter, 2) Tadros expresses preference for "polyurethanes" and Texin 990R is a polyurethane that would offer "numerous advantages," and 3) combining by adhesive lamination would preserve mechanical properties of individual layers. *Id.*, 34-36. Such argument is unsupported, self-defeating, and

ultimately fails.

As discussed above, the proposal of adhesive lamination specifically to preserve mechanical properties serves as the lynchpin of Petitioner's challenge but is unsupported and even contradicted by Petitioner's own argument and evidence. Furthermore, Petitioner's admissions regarding unpredictability also undermine its challenge. Petitioner argues that "[t]he efficacy of repositioning teeth using dental aligners that either alter the relative placement of the hard and soft layers, or replace layers with other polymers without guidance to do so, is unpredictable." Pet., 23 n.4. Petitioner further states that "changing layer properties or the relative order of hard and soft layers has unpredictable effects on an aligner's properties and efficacy." Pet., 56 n.10. Yet Petitioner inexplicably proposes just this, replacing layers with other polymers (e.g., Tadros's outer layers with Texin 990R), and suggesting its change was "likely to be obvious when it does no more than yield predictable results." Pet., 37 (quoting *KSR Int'l Co. v. Teleflex Inc.*, 550 U.S. 398, 416 (2007)); *see* EX2014, ¶¶54-57, 115. Petitioner cannot have it both ways: its insistence that substituting layers is unpredictable is inconsistent with its claim that it would have yielded predictable results.

Petitioner's self-destruction is not limited to this. Elsewhere, Petitioner argued a POSITA would actually be discouraged from pursuing the combination proposed here. In ground 1, Petitioner specifically cherry-picks for its hard layer

Tadros's **polycarbonate** mixture that is "derived from mixing polycarbonate and polyesters." Pet., 32 (citing EX1004, [0022]). In co-pending IPR2025-00820, however, Petitioner argued a POSITA would actually seek to avoid the same Tadros polycarbonate mixture as it would be viewed as harmful. IPR2025-00820, Paper 1 at 35 ("Tadros used polycarbonate-copolyester mixtures. A POSITA would have known, however, that polycarbonate-based dental aligners, including those disclosed in Tadros, would release harmful BPAs. A POSITA thus would have sought to replace Tadros's hard mixture…" (citations omitted)). Again, Petitioner cannot have it both ways—if Tadros's polycarbonate mixture would be avoided as harmful, there is no motivation to select it here. *See* EX2014, ¶58.

Beyond expressly arguing—here and elsewhere—that the very substitutions it proposes are undesirable and unpredictable, Petitioner bases its arguments on mischaracterizations of Tadros and impermissible hindsight reconstruction of the claims.[2]

The starting premise of Petitioner's argument mischaracterizes Tadros. The proffered reason for selecting polyurethane in the first place is the false assertion

[2] Petitioner's argument that Tadros and Kalili are directed to similar subject matter is of minimal, if any, impact. *See In re Kahn*, 441 F.3d 977, 986-87 (Fed. Cir. 2006) (analogous art inquiry is distinct from motivation analysis).

Tadros identifies polyurethanes as preferred "elastomers." Pet., 34 (quoting EX1003, [0073]). Tadros says no such thing. Tadros generically refers to elastomers, but the only preferred elastomer it identifies is not polyurethane: "[a] preferred elastomer for the first layer is a copolyester ether," specifically "ECDEL 9966." EX1003, [0073]; *see* EX2021, 4:25-31. Polyurethanes only appear as one category in a laundry list of approximately thirty different broad categories of elastomers described as "[s]uitable examples." EX1003, [0073]; EX2014, ¶¶61-63. As the petition's only reason for turning to polyurethanes in the first place is its false characterization of them as "preferred," the petition fails to justify its additional pivot to a particular polyurethane from Kalili.

While Petitioner proposes a combination specifically using adhesive lamination and TEXIN 990R, it never addresses or factors in known **disadvantages** of adhesive lamination. *See* EX2014, ¶¶108, 112-14. This alone is reason enough to find an incomplete and faulty obviousness inquiry. *Arctic Cat Inc. v. Polaris Indus.*, 795 F. App'x 827, 833 (Fed. Cir. 2019) ("The Board must weigh the benefits and drawbacks of the modification against each other, to determine whether there would be a motivation to combine."); *Henny Penny Corp. v. Frymaster LLC*, 938 F.3d 1324, 1332 (Fed. Cir. 2019).

Petitioner's submitted evidence includes a long list of disadvantages of adhesive lamination that are ignored in the petition. *See, e.g.*, EX1042, 9-10.

Particularly salient considerations in the context of orthodontic aligners are unwanted "bacteria, mold" contamination and unwanted exposure to chemicals and solvents that "may present health problems." EX1042, 9-10. Petitioner's own proposal of construction by adhesive lamination would undermine many, if not all, of the alleged "advantages" of TEXIN 990R. Moreover, as Dr. Kimmel explains, there are various known disadvantages to using adhesive lamination that would dissuade a POSITA from pursuing what the petition proposes. EX2014, ¶¶112-17; EX2016, ¶¶40-42. The petition materials address none of this.

Notably, Petitioner never provides any affirmative reason why a POSITA **would** have pursued adhesive lamination specifically. Instead, throughout the petition, Petitioner asserts that "a POSITA would have **been aware** of suitable techniques for laminating the first layer (polymeric mixture) and second layers (softer layers), such as adhesive lamination using a tie layer." Pet., 54; *see id.*, 30, 36, 37-38 (similar). Nowhere does Petitioner identify a reason why a POSITA would have chosen to use the adhesive lamination that its combination relies on. *See Belden Inc. v. Berk-Tek LLC*, 805 F.3d 1064, 1073 (Fed. Cir. 2015) ("obviousness concerns whether a skilled artisan not only *could have made* but *would have been motivated to make* the combinations" (emphases original)); *see* EX2014, ¶108.

At institution, the Board *sua sponte* raised an obvious-to-try rationale,

stating that "the parties have identified limited types of known lamination for aligners: coextrusion, extrusion lamination, and adhesive lamination." But the developed record has shown this is incorrect. The petition identifies such approaches as examples, not a limited number of approaches. Pet., 15-16 n.3. Dr. Osswald additionally identifies heat and pressure-based techniques as well as "flame lamination" and "dual lamination." EX1007, ¶¶42, 151; EX2014, ¶109. Even regarding "adhesive lamination," Petitioner's evidence identifies a broad range of approaches—not "a finite number of identified, predictable solutions." *See, e.g.*, EX1042. And of course, the petition states repeatedly that extrusion methods alter properties, rather than presenting them as a finite number of predictable solutions. Pet., 15-16 n.3. Obvious-to-try, besides being a legal theory **never** advanced in the petition materials, is inapposite here.

At bottom, Petitioner's argument does little beyond raising the specter of improper hindsight. It is essential to avoid the "distortion caused by hindsight bias" and "*ex post* reasoning." *KSR Int'l Co. v. Teleflex Inc.*, 550 U.S. 398, 421 (2007). As the Federal Circuit has observed, "predictability is a vital consideration in the obviousness analysis." *Otsuka Pharm. Co. v. Sandoz, Inc.*, 678 F.3d 1280, 1298 (Fed. Cir. 2012). This is not merely predictability in physically combining prior art elements, but also "that the combination would have worked for its intended purpose." *DePuy Spine, Inc. v. Medtronic Sofamor Danek, Inc.*, 567 F.3d 1314,

1326 (Fed. Cir. 2009). In the absence of predictability, the selection of prior art teachings from numerous possible alternatives to arrive at the claims speaks to hindsight reasoning, rather than obviousness. *In re Kubin*, 561 F.3d 1351, 1359 (Fed. Cir. 2009) ("[W]here a defendant merely throws metaphorical darts at a board filled with combinatorial prior art possibilities, courts should not succumb to hindsight claims of obviousness.").

As is well-known, petitioner bears the unshifting burden of proving the obviousness case they chose to construct. *See In re Magnum Oil Tools International, Ltd.*, 829 F. 3d 1364, 1375-76. Here, Petitioner's own argument and evidence undermines its assertion a POSITA would be motivated to reach the claimed subject matter with a reasonable expectation of success. Petitioner's failure to square its arguments relating to unpredictability and obviousness, in combination with Petitioner's mischaracterization of the art (e.g., adhesive lamination, Tadros), disregard of known disadvantages, and sheer enormity of different material combinations not addressed in the petition, shows that the petition's argument is impermissibly tainted with hindsight—not logically grounded in objective evidence. The hindsight-based nature of Petitioner's challenge is further highlighted by objective indicia discussed in section VI.C below, including surprising results and commercial success as well as copying by Align's competitors, including Petitioner.

B. Ground 2 Fails to Show that Claims 1-2, 4, 6-12, 14, 16-22, 24, and 26-30 Were Obvious over Kalili, Porter, Wen, and Texin 990R

Ground 2 asserts that claims 1-2, 4, 6-12, 14, 16-22, 24, and 26-30 would have been obvious over Kalili, Porter, Wen, and Texin 990R. Pet., 6. Ground 2 proposes at least three modifications to Kalili's two-layer sheet. First, it proposes modifying its higher-modulus layer by splitting it into two smaller layers each half as thick as the original, citing Wen. Pet., 53-57. Petitioner then proposes modifying each of those two new layers by replacing Kalili's polycarbonate with the co-polyester (Tritan) disclosed by Porter. EX1005, [0053]; *see* EX1006, 6; Pet., 57-59. And like ground 1, Petitioner proposes using adhesive lamination to join each layer.

As discussed below, ground 2 fails to justify these modifications. Petitioner arrives at its theory of duplication of layers by misreading Wen to produce a layer configuration that the prior art neither disclosed nor gave reason to use. Petitioner's reliance on Porter is also ill-founded, as Porter is not only non-analogous art but also would not have motivated a POSITA to make the proposed combination. Moreover, Petitioner again relies on adhesive lamination as essential to meet the claim elements, despite no showing of a motivation to employ adhesive lamination, and without showing that a combination employing adhesive lamination would satisfy the required material properties, even though it argues generally that manufacturing would change the mechanical properties of the layers.

1. Wen Fails to Support Ground 2's Subdivision of Layers of a Multilayer Sheet

Ground 2 proposes modifying one layer of a multilayer sheet used to make Kalili's aligner (a polycarbonate layer replaced with copolyester) by splitting it into two sublayers, each half the width of the original, then gluing the two layers together again. *See* Pet., 55-56 ("two or more thinner layers of the same material (with the same overall thickness as the single layer)"). As Petitioner illustrates, this would take a two-layer sheet and replace it with a three-layer sheet like the one shown below:

Pet., 56; EX2014, ¶¶73-75. Petitioner asserts that Wen teaches doing this to "improve tooth conformity and inter-layer bonding." Pet., 55-56. However, Petitioner mischaracterizes Wen, which does not support the proposed change. EX2014, ¶76.

Petitioner cites two paragraphs of Wen as allegedly supporting this modification: paragraphs 212 and 213. *See* Pet., 54-55. Regarding paragraph 212, Petitioner relies on Wen's statement that "thinner layers can be more easily conformed to the physical tooth models than a single thick layer." Pet., 55 (quoting

EX1008, [0212]). However, as confirmed by Dr. Kimmel, Wen's discussion refers to an entirely different process than found in Petitioner's proposal. EX2014, ¶80.

Specifically, in paragraph 212, Wen describes that "the aligner is formed by a plurality of thinner layers of aligner-making material using vacuum forming." EX1008, [0212]. This type of process is described earlier in paragraphs 205 and 206, where a first sheet is vacuum-formed onto a tooth model and then a second sheet is vacuum-formed atop the first. EX2014, ¶81; EX1008, [0205]-[0206]. This is illustrated in Figs. 13-14, shown below, with a first sheet 1410 placed over a tooth model and a second sheet 1510 placed over the first:

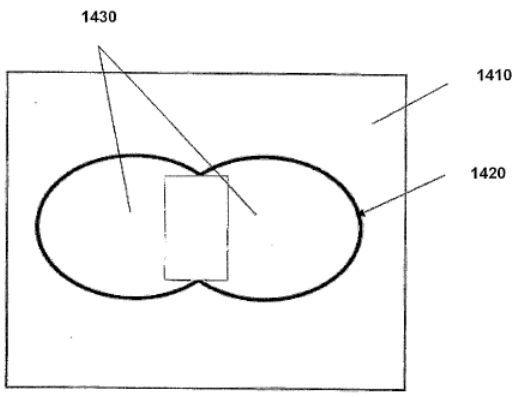

Figure 13

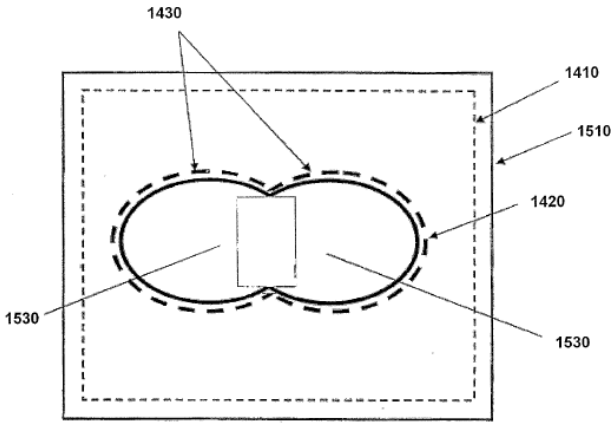

Figure 14

EX1008, Figs. 13-14; EX2014, ¶81.

Thus, paragraph 212's description of thinner layers conforming to tooth models that Petitioner cites is not describing thermoforming a single multilayer sheet containing thin sublayers over a tooth model (as in Petitioner's proposal) but

assembling an appliance by forming separate thin sheets on a dental model, one atop the other (inconsistent with Kalili and in contradiction to the claims). EX2014, ¶81. Indeed, Dr. Osswald readily admitted that paragraph 212 discusses a process with separate sheets for each layer like that in paragraphs 205-206, not his proposed multilayer sheet. EX2017, 27:13-28:8; EX2014, ¶81.

Petitioner's reliance on the next paragraph of Wen also fails. Paragraph 213 describes forming an appliance using sheets of different materials, noting that thicker films may delaminate while "[t]hinner films allow more intimate contact between polymer sheets and therefore help bond the films to one another." EX1008, [0213]. Coming as it does right after paragraph 212, paragraph 213 is naturally referring to the same process of sequentially laying separate sheets atop one another, and thus fails to support Petitioner's claim that thinner layers **combined to form a thicker multilayer sheet prior to thermoforming** will conform better. EX2014, ¶87.

Dr. Osswald again conceded that this refers to sequentially placing sheets atop one another. *See* EX2017, 28:20-29:4 ("[T]his is talking about sequentially laying the films one on top of the other on top of the physical tooth model, as in Paragraph No. 212 and consistent with Paragraphs 205 and 206, right? Well, yeah…."). While Dr. Osswald imagines that this teaching might not necessarily apply only to this process (*id.*, 29:8-21), he fails to explain why a POSITA would

read Wen this way. *See also id.*, 41:18-42:24 (unsure whether paragraph 231 also supported his argument); EX2014, ¶¶84-85 (no support in paragraph 231). Indeed, Dr. Kimmel explains the better conformance to the tooth model arises because individual, thinner sheets are laid one atop the other in Wen. EX2014, ¶¶88-89. For example, when laying plastic sheets over an irregular tooth surface like that shown below in Fig. 6, individual thin layers will shape more easily because they are more flexible, and thus easier to bend than a thick sheet. *Id.*.

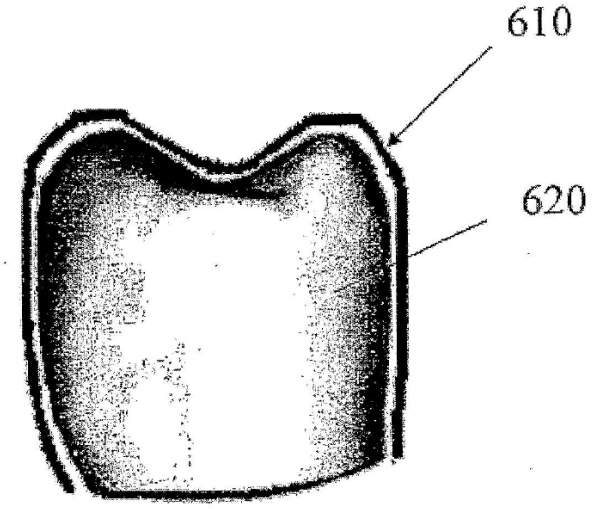

Figure 6

In contrast, a multilayer sheet comprising multiple thinner layers would not be expected to conform any better to a tooth mold than would a sheet of the same thickness made up of just two, thicker layers. EX2014, ¶¶82-83, 88-89. Thus, a POSITA would not have read Wen as providing any reason to construct a

polymeric sheet by laying multiple identical thin layers together as Petitioner suggests. EX2014, ¶90.

Petitioner and Dr. Osswald also cite to Bedard (EX1051) and Schrenk (EX1019), but neither supports their proposal. *See* Pet., 7-8; EX1007, ¶¶52-53 (citing EX1051, 3:55-67; EX1019, 155-56). Regarding Bedard, the cited portion describes forming a sheet with multiple layers that collectively behave as though they were a single combined layer. EX2014, ¶¶77-79. The cited paragraph says nothing about thinner layers conforming better to tooth models or providing better tooth positioning. *Id.* Indeed, Bedard expressly describes that multiple soft or hard ("strengthening") materials put together act as a soft or hard layer equivalent. *See* EX1051, 3:55-57; EX2014, ¶79. A POSITA would thus conclude that Petitioner's proposal would not only fail to provide the benefit Petitioner identifies but would incur needless cost and risk introducing points where the material can fail along the new interface. EX2014, ¶79.

Petitioner's citation to Schrenk fares no better. The cited portion of Schrenk describes that when layers are thin, one layer "can more easily influence the response of its neighbor." EX1019, 155-56. As Dr. Kimmel explains, this refers to "interlayer interactions," in which adjacent layers of different materials alter each other's material properties over extremely short distances. EX2014, ¶86. Indeed, the next sentence of Schrenk describes such interactions as occurring in a

"microlayer film, with hundreds of very thin layers." EX1019, 156. Such arrangements have nothing to do with Petitioner's proposal, which involve just two thin layers of the **same material** next to each other, and further separated by a glue layer. EX2014, ¶86. Indeed, Petitioner asserted that a POSITA would avoid changing layer properties (e.g., via interlayer interactions) using adhesive lamination, directly opposed to Schrenk's stated purpose of using thin layers. *Id.* Schrenk thus also fails to provide a reason to subdivide layers in an aligner sheet as Petitioner proposes.

Accordingly, Petitioner has failed to show that Wen supports its proposed modification in ground 2.

2. Ground 2's Reliance on Porter is not Justified

After proposing to split Kalili's polycarbonate layer in two, Ground 2 argues that a POSITA would have further modified those layers by replacing polycarbonate with a different material. Petitioner contends that a POSITA would have looked to Porter to substitute Tritan copolyester into the dental aligner. *See* Pet., 57-59. However, the petition neither establishes Porter as analogous art nor that a POSITA would have been motivated to make the proposed substitution. Rather, Porter contains nothing indicating relevance to dental aligners.

a. Petitioner fails to show Porter is analogous art

To be analogous art, a reference must be (1) "from the same field of

endeavor" or (2) "reasonably pertinent to the particular problem with which the inventor is involved." *Sanofi-Aventis Deutschland GmbH v. Mylan Pharms., Inc.*, 66 F.4th 1373, 1377 (Fed. Cir. 2023). To be pertinent art, a reference must be one that "logically would have commended itself to an inventor's attention in considering his problem." *In re ICON Health and Fitness, Inc.*, 496 F. 3d 1374, 1380 (Fed. Cir. 2007). Petitioner here fails to explain why a "skilled artisan would have plucked one reference [Porter] out of the sea of prior art," without any guidance from Porter (or other art) to bring Porter to the attention of one seeking to develop dental aligners. *WBIP, LLC v. Kohler Co.*, 829 F.3d 1317, 1337 (Fed. Cir. 2016).

There is no question that Porter is not from a field relating to dental aligners. *See* Pet., 9 (asserting only "Kalili, Wen, and Tadros are directed to the [relevant] field"). Instead, in a single sentence, Petitioner asserts that Porter and Texin 990R are analogous art because they are "pertinent to the problem of improved aligner materials as they describe polymers explicitly identified by the other references **<u>or</u>** within a class of polymers identified as suitable for dental aligners," generally citing to the '384 patent and over fifty paragraphs of its expert declaration. *Id.* (citing EX1001, 1:54-57; EX1007, ¶¶98-128, 145-67). The petition doesn't identify which of these two categories applies to Porter, doesn't explain which "other references" identify Porter's polymer, and doesn't explain who or what

Petitioner contends "identified" a class of polymers suitable for dental aligners that Porter falls within. Pet., 9. These bald assertions, advanced without explanation, fail to meet Petitioner's burden to show that Porter was analogous art.

Petitioner's citations also fail to clarify Petitioner's theory. Petitioner never explains how the over sixty cited declaration paragraphs apply. Pet., 9. As to the citation to the '384 patent, it merely states that "it may be advantageous to develop materials that improve properties of the appliances/aligners used for orthodontic treatment. As such, there is a need for shell aligners that can, for example, produce more continuous force and better bring a patient's teeth into a desired occlusion." EX1001, 1:54-58. Identification of a problem is not an explanation why Porter would be viewed as relevant to that problem. Petitioner fails to show how Porter "logically would have commended itself to an inventor's attention in considering his problem" (i.e., why a POSITA would have turned to Porter in seeking a material for a dental aligner) and thus fails to show Porter is analogous art. *ICON Health*, 496 F. 3d at 1380. EX2014, ¶¶91-94.

While Petitioner's cursory assertion regarding analogous art wholly fails to meet its burden on this point, even the most minimal examination of Porter's content quickly reveals its lack of pertinence. Porter never mentions any orthodontic or dental applications. EX1006; EX2016, ¶92. Indeed, Porter's Tritan copolyester, Tritan TX1000, is not even a medical-grade polyester. EX2014, ¶¶70,

92; *see* EX1006, Fig. 2 ("Tritan TX 1000"); EX1118, 7-8 (Tritan TX1000 for use in appliances, durable consumer goods, and houseware, not medical applications). An orthodontic aligner is a Class II medical device, and a POSITA would look to medical-grade materials, not non-medical materials like Porter's TX1000. EX2014, ¶92; EX2016, ¶22. Petitioner's suggestion that a POSITA would have looked to Porter for an aligner material thus fails to present a realistic depiction of what a POSITA would look for.

The examples discussed in Porter also differentiate it from dental appliance applications. Porter's only example products are thick-walled plastic containers for holding food and water (e.g., water bottles, blenders, a "thick-walled soup bowl"). EX1006, 8-9. The structure and purpose of Porter's examples are thus dissimilar to aligners. EX2014, ¶92.

Further, each of these products is injection-molded, not thermoformed. EX2014, ¶93. Indeed, Porter only briefly mentions that Tritan is capable of being thermoformed, and it never discusses thermoforming Tritan into any kind of orthodontic, dental, or other medical device. *See* EX1006, 6 ("Thus far, it has been shown to be suitable for injection molding, injection-blow and stretch-blow molding, sheet and flat film extrusion, and thermoforming."), 7 ("It molds well with hot runners and small gates. It also thermoforms well with deep draws."); EX2014, ¶93.

Porter also never discusses incorporating Tritan into multilayer sheets. EX2014, ¶94. While Porter mentions that Tritan can be extruded into a sheet or flat film, it never discusses combining Tritan with other polymers at all. *See* EX1006, 6, 7; EX2014, ¶94. In sum, nothing about Porter's description of the characteristics of, and applications for, its Tritan TX1000 material indicates that a POSITA would have looked to Porter for a dental aligner material.

b. Petitioner fails to establish motivation to combine Porter with Kalili

Petitioner's arguments regarding motivation to combine similarly fail to show why a POSITA would have turned to Porter as relevant to dental aligners. Petitioner argues a POSITA would have turned to Porter "to avoid the harmful BPAs released from polycarbonate aligners" as in Kalili. Pet., 58. Yet Petitioner never attempts to reconcile this alleged motivation with its ground 1 argument that proposes a dental aligner containing polycarbonate. *See, e.g.*, Pet., 33 (proposing using "one of [Tadros's] exemplary hard polymeric [polycarbonate-PCCD] mixtures"). Petitioner's ground 1 argument directly contradicts its ground 2 rationale to combine Kalili and Porter. *See* EX2014, ¶96.

Even setting aside these inconsistencies, identification of an undesirable aspect of polycarbonate dental aligners fails to define a relevant "class of polymers" (Pet., 9) for a POSITA to consider, let alone provide a reason to turn to Porter. The only polymer Petitioner identifies as containing BPAs is

polycarbonate. Pet., 57-58. Seeking a polymer other than polycarbonate is not enough to bring Porter to the attention of someone developing dental aligners, as Petitioner's arguments identify no reference teaching the use of Tritan in a dental aligner, or even a reference teaching a co-polyester as an alternative to a polycarbonate in dental aligners. In fact, Kalili discloses many BPA-free alternatives to polycarbonates in dental aligners, none of which is a co-polyester. EX1005, [0053] (materials include "polyacetates, polyolefins, polyamides, polystyrenes…"); EX2014, ¶97. Lacking BPAs is thus not a sufficient basis to bring Porter to the POSITA's attention. EX2014, ¶95.

Moreover, Dr. Osswald himself cites to references teaching numerous known non-copolyester, BPA-free polymers. *See* EX1007, ¶97 (citing EX1106, EX1108, EX1109, EX1110, EX1113); EX2014, ¶98 (no disclosure of copolyesters). Yet despite insisting that adding Tritan—a polymer with no disclosed orthodontic use—would have been predictable, he insists using *other* BPA-free polymers "would have entered a domain of unpredictability." EX2017, 99:5-18. Dr. Osswald's view that only Tritan would have been predictable, while BPA-free polymers with known orthodontic uses (like those in Kalili) would be unpredictable, throws his hindsight reasoning into sharp relief. *See* EX2014, ¶¶96-97.

Attempting to bridge the gap between Porter's "Dishwasher Safe" disclosure

and the dental aligner context, Dr. Osswald cites to a single reference (Rafih, EX1104) as involving use of a BPA-free Tritan material in an oral appliance. EX1007, ¶97, 99, 146. As an initial matter, Rafih is not cited anywhere in the petition and should be disregarded on that basis. To the extent Petitioner intended to rely on Rafih merely by virtue of its inclusion in cited paragraphs of Dr. Osswald's declaration, such reliance would constitute improper incorporation by reference. 37 C.F.R. §42.6(a)(3). ("Arguments must not be incorporated by reference….").

Beyond that, Dr. Osswald glosses over important distinctions between Rafih's subject matter and a dental aligner, such that it would not serve as the missing link between Porter and Kalili. Dr. Osswald asserts "Rafih would inform a POSITA that Porter's guidance regarding replacing polycarbonate with Tritan applies to dental appliances where Tritan is used in combination with a soft inner layer." EX1006, ¶146. But this is not true at all. EX2014, ¶99. Rafih does not use layers in a multilayer sheet, or any sheet at all for its appliance. EX2014, ¶100. Rafih's appliance is formed from separate plastic pieces, shown most clearly in Fig. 1B below.

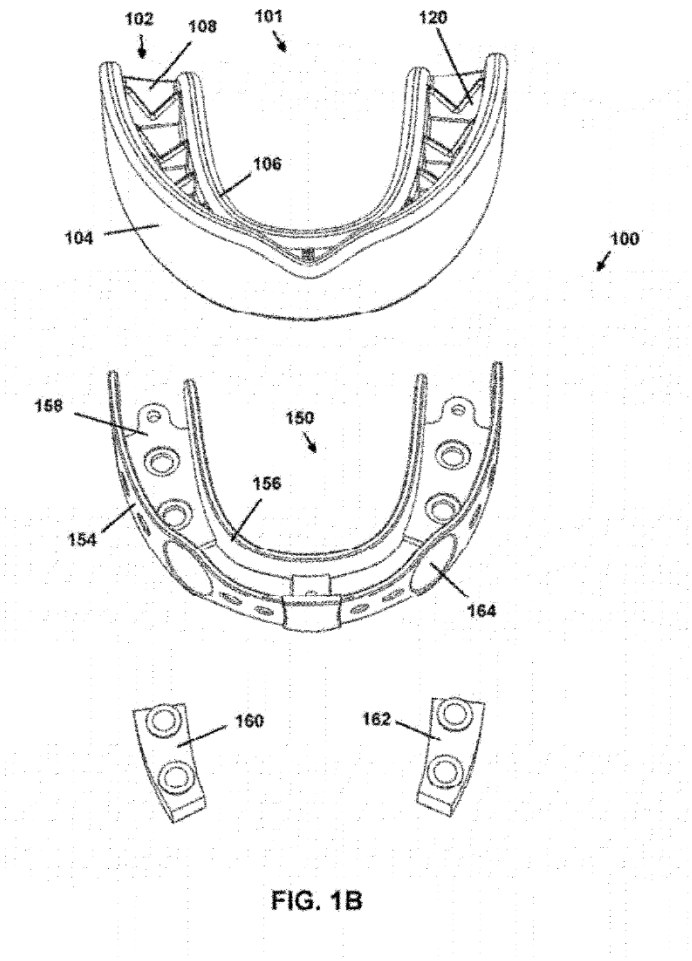

EX1104, Fig. 1B.

As shown above, the upper part (channel 102) is made of a soft polymer that the patient can bite into and deform upon boiling, so that it takes the shape of the teeth like a dental impression. EX1104, 5:1-6. The middle part (150) is a “frame” that merely reinforces the oral appliance against undesirable deformation. EX1104, 5:30-64. Rafih teaches this part may be made of Tritan. EX1104, 5:57-64; EX2014, ¶¶99-100. As Dr. Kimmel explains, neither Rafih’s frame nor Rafih’s channel is a layer of a sheet, much less are they layers of a multilayer sheet.

EX2014, ¶101. The two components are clearly shown as separate parts that can be placed together into Rafih's mouthguard apparatus. *Id.* Thus, Dr. Osswald's characterization of this configuration as one where "Tritan is used in combination with a soft inner layer" is simply inaccurate. *Id.*

Other characteristics of Rafih further eliminate any relevance to a thermoformed dental aligner. Rafih describes neither dental aligners nor tooth-moving forces, does not involve thermoforming sheets, and does not use Tritan in either thermoforming or sheets. EX2014, ¶102. For example, Rafih is directed to a type of mouthguard that keeps the jaws apart, not a dental aligner aimed at producing a force to bring a patient's teeth into a desired occlusion. *See* EX1104, 4:21-42. Indeed, Dr. Osswald admitted that Rafih's appliance fails to provide any tooth-moving forces. EX2017, 96:24-97:2; *see also* EX2014, ¶99. Moreover, a POSITA would have understood that Rafih's frame 150 is not made by thermoforming. EX2014, ¶102. Thermoforming a sheet simply would not produce a shape like that of the frame 150. *Id.* Consistent with this, Rafih never says the frame is thermoformed. Rather, from the shape shown, a POSITA would have concluded that Rafih's frame was most likely formed by a molding process (e.g., injection molding) that produces a fixed shape independent of the shape of the patient's mouth, which further distinguishes Rafih from dental aligner references like Tadros and Kalili. *Id.*

Simply put, Rafih (1) does not use Tritan to apply tooth-moving forces; (2) does not involve sheets of Tritan; (3) does not involve multilayer sheets; and (4) does not teach thermoforming Tritan, confirming Rafih was irrelevant to the problem the ’384 patent inventors were seeking to solve. EX2014, ¶103. Thus, Dr. Osswald’s reliance on Rafih further highlights the lack of evidence supporting Petitioner’s assertion that a POSITA would have turned to Porter when developing a thermoformed multilayer dental aligner. *Id.* Regardless of whether Rafih or Porter describes Tritan as BPA-free, neither reference addresses other critical threshold issues for consideration in dental aligners, such as the material’s ability to apply tooth-moving forces.

Furthermore, even if a POSITA were to consider Porter, the reasons given for selecting Porter’s copolyester also fall short. First, as discussed above, whether a POSITA had an interest in avoiding BPA in a dental aligner, Petitioner provides no reason to ignore the numerous BPA-free alternatives in Kalili and instead turn to an article having nothing to do with a medical-grade material or dental appliances. Petitioner also argues that a POSITA would have turned to Porter “to improve product safety and longevity,” suggesting that POSITAs would select Porter’s Tritan because Porter describes Tritan as having “durability in ‘harsh’ environments of ‘heat, hydrolytic and chemical attack, and applied stress’ required for dental aligner materials,” as well as avoiding “product failure from

environmental stress cracking." Pet., 57-59 (quoting EX1006, 6). However, as Dr. Kimmel explains, a POSITA would not view Porter's description as providing good reasons to use Tritan in a dental aligner. EX2014, ¶¶104-07.

With regard to heat, chemical, hydrolytic attack, and stress, Porter expressly describes these properties in relation to what "kitchenware is exposed to the dishwasher." EX1006, 6. A POSITA would not have viewed the dishwasher environment as bearing a meaningful relationship to a dental aligner worn in the mouth. EX2014, ¶105. Porter describes the ability of thick, plastic dishware to withstand intermittent hot temperatures and detergents. EX1006, 8; EX2014, ¶105. This does not address the ability of very thin materials, like the layers of a multilayer aligner, to withstand weeks in a continuous warm, wet environment, including both continuous stress from applying tooth-moving forces as well as the continual forces from biting. EX2014, ¶105.

Petitioner's discussion of environmental stress cracking also mischaracterizes Porter. EX2014, ¶106. Porter refers to improved resistance to environmental stress cracking as arising from the material's "lower residual stress level." EX1006, 6. However, as Porter notes, this residual stress arises from the injection molding process, not from forming materials in sheets by processes like extrusion. *Id.* ("Products <u>molded</u> from Tritan have less residual stress…."). Dental aligners are made by thermoforming sheets, not a molding process, so the type of

residual stress contemplated by Porter is simply not present. EX2014, ¶106. Thus, a POSITA would have viewed this teaching of Porter as having little relevance to thermoforming aligners. EX2014, ¶106.

Moreover, as discussed in section VI.C, whereas Petitioner describes that a POSITA would have relied on Porter for a hard material in a dental aligner because "materials for dental aligners … must be durable" (Pet., 14), Align's testing showed that aligners formed from Tritan did not exhibit strong durability, such that they were substantially outperformed by aligners made according to the instant claims. EX2014, ¶107. Thus, testing confirms that Tritan lacks the property Petitioner says was needed in dental aligners, confirming Petitioner's reasoning as a flawed application of hindsight, rather than an accurate description of Tritan's properties.

Accordingly, Petitioner fails to meet its burden in establishing the obviousness of the claims in ground 2 because Petitioner fails to show that a POSITA would have modified Kalili to include a layer of co-polyester based on Porter. While Petitioner has failed to make a plausible prima facie showing, as explained below in section VI.C, Align's evidence of surprising results and commercial success further demonstrates nonobviousness.

3. Ground 2 Fails to Justify Its Use of Adhesive Lamination

As with ground 1, ground 2 proposes substitution of different materials into

layers of a multilayer appliance (e.g., layer(s) of Porter's Tritan copolyester in combination with layer(s) of TEXIN 990R) and attempts to show that the properties recited in the '384 patent's claims would be present in its proposed combination. *See, e.g.*, Pet., 57-60 (using datasheet properties of TEXIN 990R and properties of Tritan described in Porter).

As in ground 1, Petitioner proposes using "adhesive lamination," adding "tie layers" between different layers as a glue to stick the layers together, which Petitioner asserts would preserve each polymer's reported mechanical properties. Pet., 54; *see id.*, 36. Petitioner does not contend that its grounds' references teach using this type of adhesive lamination process to form an aligner from a multilayer sheet as claimed. Nor does ground 2 remedy the failure of ground 1 to argue or satisfy the requirements for an obvious-to-try rationale. *See KSR*, 550 U.S. at 406. Instead, Petitioner asserts that "a POSITA **would have been aware** of suitable techniques for laminating the first layer (polymeric mixture) and second layers (softer layers)," such as adhesive lamination using a tie layer. Pet., 54; *see also id.*, 30, 36, 37-38 (insisting on mere awareness throughout petition).

As explained above for ground 1, Petitioner's focus on what a POSITA would have been aware of, or what a POSITA could have done, is inappropriate: obviousness depends on what a POSITA *would have done*. *See InTouch*, 751 F.3d at 1352; *Polaris*, 882 F.3d at 1068. By focusing only on options POSITAs would

have known of without addressing whether they would have employed those options, ground 2's combination is "fraught with hindsight bias" and fails to satisfy the standard for obviousness. *ActiveVideo*, 694 F.3d at 1327.

As in ground 1, ground 2 does not argue that a POSITA would have been motivated to use adhesive lamination. Ground 2 never discusses how a POSITA would have viewed the benefits and disadvantages of employing adhesive lamination instead of coextrusion or extrusion lamination. *See* Pet., 54. And ground 2 relies on the same textbook teachings of glue layers as ground 1, without showing that the issues the book identifies as reasons for using adhesive lamination would have been present in the proposed combination. *See* Pet., 7, 54; EX1019, 150. Nor does ground 2 discuss the suitability of such glue layers in a warm, wet environment like the human mouth in which a dental aligner is continuously worn, or the biocompatibility needed for such glues.

Ground 2 also fails to address the effect of inserting layers of glue into a dental appliance. The petition asserts that modifying materials and layer arrangements in multilayer appliances is unpredictable. Pet., 23-24 n.4, 56 n.10. Yet it proposes inserting tie layers without any regard for the effect these new layers of different materials would have on the appliances' material properties or efficacy. *See* Pet., 30, 36, 54.

In sum, the use of adhesive lamination is essential for Petitioner's mapping

in ground 2, yet Petitioner fails to assert, much less show why a POSITA would have been motivated to use adhesive lamination, nor address the unpredictability Petitioner admits exists. Thus, Petitioner fails to show obviousness of the claims challenged in ground 2.

4. Petitioner's Hindsight Combination is Contradictory and Self-Defeating Regarding Mechanical Properties

As with ground 1, Petitioner offers conclusory and conflicting argument and evidence regarding its ground 2 assertion that the proposed combination utilizing adhesive lamination would satisfy the mechanical properties recited in elements 1[c]/11[b]/21[d]/21[i] and 1[d]/11[c]/21[e]/21[j]. *See supra*, section VI.A.2. Even if the Board credits Petitioner's arguments that a POSITA would have used adhesive lamination in the ground 2 combination (*see, e.g.*, Pet., 54-55, 60), the petition's arguments that elements 1[c]/11[b]/21[d]/21[i] and 1[d]/11[c]/21[e]/21[j] would be satisfied fail for the same reasons discussed above.

For at least the foregoing reasons, Petitioner fails to meet its burden of demonstrating that claims 1-2, 4, 6-12, 14, 16-22, 24, and 26-30 would have been obvious over Kalili, Porter, Wen, and Texin 990R.

C. Objective Evidence of Nonobviousness Supports the Patentability of Claims 1-4, 6-14, 16-24, and 26-30

"Objective indicia of nonobviousness must be considered in every case where present." *Apple Inc. v. Samsung Elecs. Co.*, 839 F.3d 1034, 1048 (Fed. Cir.

2016). Indeed, such evidence "may often be the most probative and cogent evidence in the record." *Id.*, 1052-53. Objective indicia can "serve to 'guard against slipping into use of hindsight,' and to resist the temptation to read into the prior art the teachings of the invention in issue." *Graham v. John Deere Co.*, 383 U.S. 1, 36 (1966).

As explained below, the nonobviousness of the '384 patent is further supported by Patent Owner's evidence of secondary indicia, including unexpected results, commercial success, and widespread adoption by the industry including copying by others.

1. Aligners Made with SmartTrack Have Nexus to the Challenged Claims

To be accorded substantial weight, objective evidence "must have a 'nexus' to the claims, *i.e.*, there must be 'a legally and factually sufficient connection' between the evidence and the patented invention." *Henny Penny*, 938 F.3d at 1332. The nexus analysis evaluates "the correspondence between the objective evidence and the claim scope." *Id.*

The aligners manufactured and sold by Align under the name SmartTrack embody the '384 patent claims. SmartTrack material is a multilayer polymeric material that is formed of a sheet comprising multiple layers of soft and hard materials having properties recited in the independent claims. EX2014, ¶¶124-27. An aligner manufactured from the SmartTrack material is worn on a patient's

teeth, and when worn, the aligner applies forces to move the patient's teeth from a first configuration to a second configuration, thereby positioning the patient's teeth. *Id.* SmartTrack aligners use a three-layer configuration, with a hard layer formed of a hard co-polyester material disposed between two soft layers formed of a soft thermoplastic polyurethane elastomer material. *Id.* The properties of SmartTrack sheets and aligners meet each element of the independent claims, as well as meeting elements of multiple dependent claims. EX2014, ¶136; EX2016, ¶¶14-20.

As illustrated in the chart below, SmartTrack aligners embody each of the independent claims:

'384 Patent Claims	**SmartTrack Aligners**
1[pre] A dental appliance for positioning a patient's teeth from a first arrangement toward a second arrangement, the dental appliance comprising:	SmartTrack aligners are dental appliances for positioning a patient's teeth from a first arrangement toward a second arrangement. EX2014, ¶136.
1[a] a plurality of tooth-receiving cavities shaped to receive and resiliently reposition the patient's teeth from the first arrangement toward the second arrangement;	SmartTrack aligners have multiple tooth-receiving cavities shaped to receive and resiliently reposition the patient's teeth from the first arrangement toward the second arrangement. *Id.*
1[b] three or more polymer layers, the three or more polymer layers comprising:	SmartTrack aligners have three polymer layers. *Id.*
1[c] a hard polymer layer comprising a co-polyester	The three polymer layers of a SmartTrack aligner include a hard polymer layer comprising a co-

’384 Patent Claims	SmartTrack Aligners
and having a flexural modulus greater than about 150,000 psi; and	polyester and having a flexural modulus greater than about 150,000 psi. *Id.*
1[d] a soft polymer layer comprising a thermoplastic polyurethane elastomer and having an elongation at break of greater than about 200%, and a hardness from about 60 A to about 85 D.	The three polymer layers of a SmartTrack aligner include a soft polymer layer comprising a thermoplastic polyurethane elastomer and having an elongation at break of greater than about 200%, and a hardness from about 60 A to about 85 D. *Id.*
11[pre] A plurality of dental appliances for positioning a patient’s teeth,	*See* 1[pre]. Typically, a plurality of these appliances is made for a patient. *Id.*
11[pre] having a plurality of tooth-receiving cavities shaped to directly receive at least some of the patient’s teeth and apply a resilient positioning force to the patient’s teeth,	*See* 1[a]. *Id.*
11[pre] wherein the plurality of dental appliances are shaped to move teeth from one arrangement to a successive arrangement, and wherein at least at one of the plurality of dental appliances comprises:	SmartTrack aligners are typically made as a set of aligners, each made to move a patient’s teeth from one arrangement to a successive arrangement. *Id.*
11[a] three or more polymer layers, the three or more polymer layers comprising:	*See* 1[b]. *Id.*
11[b] a hard polymer layer comprising a co-polyester and having a flexural	*See* 1[c]. *Id.*

’384 Patent Claims	SmartTrack Aligners
modulus greater than about 150,000 psi; and	
11[c] a soft polymer layer comprising a thermoplastic polyurethane elastomer and having an elongation at break of greater than about 200%, and a hardness from about 60 A to about 85 D.	*See* 1[d]. *Id.*
21[pre] A plurality of dental appliances for positioning a patient’s teeth, the plurality of dental appliances comprising:	*See* 1[pre]. Typically, a plurality of these appliances is made for a patient. *Id.*
21[a] a first dental appliance comprising:	The plurality of SmartTrack dental aligners include a first dental appliance and a second dental appliance. *Id.*
21[b] a first plurality of tooth-receiving cavities shaped to receive and resiliently reposition the patient’s teeth from a first arrangement toward a second arrangement;	*See* 1[a]. *Id.*
21[c] first three or more polymer layers, the first three or more polymer layers comprising:	*See* 1[b]. *Id.*
21[d] a first hard polymer layer comprising a co-polyester and having a flexural modulus greater than about 150,000 psi; and	*See* 1[c]. *Id.*
21[e] a first soft polymer layer comprising a thermoplastic polyurethane elastomer and having an elongation at break of	*See* 1[d]. *Id.*

’384 Patent Claims	SmartTrack Aligners
greater than about 200%, and a hardness from about 60 A to about 85 D; and	
21[f] a second dental appliance comprising:	The plurality of SmartTrack dental aligners include a first dental appliance and a second dental appliance. *Id.*
21[g] a second plurality of tooth-receiving cavities shaped to receive and resiliently reposition the patient’s teeth from the second arrangement toward a third arrangement;	*See* 1[a]. *Id.*
21[h] second three or more polymer layers, the second three or more polymer layers comprising:	*See* 1[b]. *Id.*
21[i] a second hard polymer layer comprising a co-polyester and having a flexural modulus greater than about 150,000 psi; and	*See* 1[c]. *Id.*
21[j] a second soft polymer layer comprising a thermoplastic polyurethane elastomer and having an elongation at break of greater than about 200%, and a hardness from about 60 A to about 85 D.	*See* 1[d]. *Id.*

EX2014, ¶¶136; *see* EX2016, ¶¶15-20. As the above chart shows, SmartTrack aligners embody the independent claims.

As discussed below, the objective evidence of nonobviousness arises from the merits of the claimed invention, thereby confirming nexus between the

objective evidence and the invention as claimed.

2. SmartTrack Aligners Show Unexpectedly Superior Performance

Objective evidence showing unexpected results for the claimed invention supports nonobviousness. *E.g.*, *In re Kao*, 639 F.3d 1057 (Fed. Cir. 2011). Unexpected results are "particularly probative" where there is "a difference between the results obtained and those of the closest prior art, and that the difference would not have been expected by one of ordinary skill in the art at the time of the invention." *Bristol-Myers Squibb Co. v. Teva Pharms. USA, Inc.*, 752 F.3d 967, 977 (Fed. Cir. 2014). This can include demonstrating a "significant difference in degree" in a property relevant to the claimed invention, such as one amounting to "marked superiority." *Id.*

As discussed above in section II, the SmartTrack material was developed over a multi-year development process, seeking to identify an improvement over the leading prior aligner material, EX30. Align's objectives included improvement in stress-relaxation relative to EX30, as well as comparable or improved performance in multiple other properties important for effective aligner treatment. This process evaluated hundreds of different candidate materials. The process ultimately identified SmartTrack (or ST30) as the preferred commercial candidate among all tested materials. SmartTrack showed substantial improvement over EX30 and met Align's design objectives. EX2014, ¶¶139-44; EX2016, ¶¶5-10, 21-

25, 27.

Align subsequently conducted a clinical trial comparing SmartTrack to EX30 in patients. The trial provided SmartTrack aligners to all new patients for participating doctors over a one-month period and compared to a group consisting of patients treated by those doctors over the prior six months using EX30 aligners. The study found that relative to EX30, SmartTrack provided a substantial increase in percentage of patients who were "on-track," with teeth moving as intended (26% improvement, $p < 0.001$). The study also found a substantial decrease in patients who were "off-track" (-17%, $p < 0.001$) or very substantially off-track (-34%, $p < 0.001$). EX2014, ¶¶145-47; EX2016, ¶¶26-29.

These clinical results were highly surprising, showing such a marked improvement in performance that Align promptly replaced all of its EX30 aligners with SmartTrack, which since 2013 has been the top-performing material for clear plastic aligners. EX2014, ¶148; EX2016, ¶30.

Subsequent analysis confirmed SmartTrack's superiority relative to EX30 and other known materials. A retrospective analysis conducted comparing 110,000 patients treated with either EX30 or SmartTrack showed that SmartTrack produced substantially improved tooth movement predictability along each of fourteen different measures to a highly significant degree, with an average of 75% improvement across all categories. EX2014, ¶149; EX2016, ¶¶31-35. Align

reported this 75% improvement in a 2018 brochure along with other results showing significant increases in durability, capacity to sustain force, and ability to revert to shape after deformation than EX30 or other candidate materials tested by Align. *See* EX2027; EX2014, ¶149; EX2016, ¶34.

Further clinical testing, reported in a study published by Dr. Timothy Wheeler et al., showed that SmartTrack aligners provided significantly more tooth movement as a percentage of targeted movement than EX30 aligners, with SmartTrack aligners producing an average of over 73% of intended movement in two weeks of treatment compared to under 43% provided by EX30 aligners. *See* EX2028; EX2014, ¶150; EX2016, ¶36.

These testing results show that aligners made with SmartTrack were unexpectedly superior at providing orthodontic treatment relative to the closest prior art. As the market-leading aligner material prior to the invention of SmartTrack, EX30 represented the appropriate comparator. EX2014, ¶¶151-53; EX2016, ¶¶22-23, 27, 37.

Considered together, the evidence relating to the development of SmartTrack and its surprising performance shows unexpected properties that are commensurate in scope with the challenged claims. *Id.*

3. SmartTrack Aligners Are Commercially Successful

As courts have long recognized, "the commercial success of a patented

invention is clearly important." *Truswal Sys. Corp. v. Hydro-Air Eng'g, Inc.*, 813 F.2d 1207, 1212 (Fed. Cir. 1987). Evidence of commercial success must be considered "so long as what was sold was within the scope of the claims." *In re DBC*, 545 F.3d 1373, 1384 (Fed. Cir. 2008). Align's aligners made with SmartTrack material are unquestionably within the scope of the claims (*supra* §VI.C.1) and they exhibit clear commercial success.

Prior to the introduction of SmartTrack in 2013, all aligners on the market were single-layer, and no company was able to produce a successful multilayer aligner. EX2016, ¶38. After SmartTrack's introduction, multilayer aligners became the industry standard, with numerous other companies now selling multilayer aligners. EX2016, ¶¶38-39.

Since their introduction, SmartTrack aligners represent nearly all aligner sales made by Align, and growth in aligner sales has been substantial. EX2018, ¶¶4-6. Between 1999 and 2012, Align treated just 2 million total patients. In the period from 2013 to 2025, Align treated over 20 million patients, including over 2 million patients in 2025 alone. EX2018, ¶5.

Over this same period, Align's annual clear aligner revenue increased substantially, from just over $500 million the year before SmartTrack's introduction to $3.2 billion today. EX2018, ¶6. This aligner sales revenue consists almost exclusively of SmartTrack sales. *See* EX2016, ¶¶14, 38; EX2018, ¶6.

SmartTrack has thus substantially contributed to Align's dramatic growth in aligner sales revenue. *See* EX2018, ¶6. This commercial success is strong evidence of non-obviousness.

4. Petitioner Copied Align's SmartTrack Aligners

"The fact that a competitor copied technology suggests it would not have been obvious." *WBIP, LLC v. Kohler Co.*, 829 F. 3d 1317, 1336 (Fed. Cir. 2016). Copying may be shown where a party had "access to the patented product combined with substantial similarity to the patented product." *Wyers v. Master Lock Co.*, 616 F.3d 1231, 1246 (Fed. Cir. 2010).

Petitioner manufactures aligners made with a multilayer material called Zendura FLX, which Petitioner sells under the name "ClearQuartz." *See, e.g.*, EX1023, ¶4; EX2008, ¶4 at 5, ¶18 at 8-9; EX2014, ¶154; EX2016, ¶38. Zendura FLX is manufactured by Bay Materials LLC ("Bay Materials"), and ClearCorrect and Bay Materials are both members of the Straumann Group, headed by real-party-in-interest Straumann AG. *See* EX1023, ¶4; EX2008, ¶4 at 5. As explained below, Petitioner's aligners are substantially similar to Align's SmartTrack aligners, and ClearCorrect had access to the patented product as a competitor as well as via their related company and supplier, Bay Materials. EX2014, ¶154.

Bay Materials owns U.S. Patent No. 10,946,630 (the "'630 patent"). EX2010. In IPR2022-01214, Bay Materials argued its Zendura FLX material

embodied and was coextensive with at least claim 1 of that patent. EX2025, 51-54; *see also* EX2026, ¶¶171-76 (Osswald declaration arguing same). Claim 1 recites:

1. A polymeric sheet composition, comprising:

> at least two outer layers A and C and an elastomeric inner layer B,
>
> wherein one or more of the outer layers A and C is a polyester or co-polyester having a flexural modulus of from about 1,000 MPa to 2,500 MPa,
>
> the inner layer B is comprised of an elastomeric material having a hardness from about A80 to D75,
>
> and the polymeric sheet composition has a flexural modulus of from about 750 MPa to 2,000 MPa.

EX2010, claim 1.

As Dr. Kimmel explains, the claims of the ’630 patent as well as the argument of Bay Materials and Dr. Osswald indicate that Zendura FLX is a multilayer sheet with three polymer layers, including a hard co-polyester layer with flexural modulus of from about 1,000 MPa to 2,500 MPa and an elastomeric layer with a hardness from about A80 to D75. EX2014, ¶¶155-57. These aspects of Zendura FLX match those recited in at least claim 1 of the ’384 patent, and are also substantially similar to the composition of the sheets from which SmartTrack aligners are made. EX2014, ¶157.

ClearCorrect’s website advertises that its aligners are made from Bay

Materials's Zendura FLX product. EX2022; *see also* EX2023 (ClearCorrect aligners made by thermoforming Zendura FLX). Bay Materials's website further confirms that Zendura FLX's elastomeric layer is a thermoplastic polyurethane elastomer. EX2024; *see* EX2014, ¶159.

In the district court litigation, ClearCorrect stands accused of infringing the '384 patent as well as its family members in IPR2025-00818, -00820, and -00821 via manufacture and sales of aligners with the Zendura FLX material that includes hard layers of Tritan copolyester and a soft layer of thermoplastic polyurethane elastomer according to the claims of these patents. *See, e.g.*, EX1023, ¶¶70, 87-88, 92, 108-09, 111, 126-27, 134, 148-49; EX2014, ¶158. Indeed, the petition equates ClearCorrect's aligners to Align's SmartTrack, characterizing their accused aligners as differing only in layer arrangement, being "the exact opposite configuration ('hard-soft-hard')." Pet., 1.

In addition to substantial similarity to Align's SmartTrack product and the patent claims it embodies, Petitioner also had access to both the patented product and the patents. ClearCorrect, at least via Bay Materials, was aware of Align's SmartTrack aligners and its family of patents including the '384 patent. For example, Bay Materials's '630 patent specifically cites to U.S. Patent No. 9,655,693 as prior art. EX2010, 17:16-24. The '384 patent claims priority to U.S. Patent No. 9,655,693. *See* EX1001, cover. Bay Materials and ClearCorrect thus

had access to the ’384 patent and its family member, U.S. Patent No. 9,655,693. Indeed, Bay Materials confirmed that its ’630 patent specifically describes and compares Zendura FLX to Align’s SmartTrack material, removing any question of access to Align’s SmartTrack aligners by Bay Materials and ClearCorrect. EX2025, 57; EX2014, ¶160.

Moreover, in IPR2022-01214, Bay Materials and Dr. Osswald specifically identified Align’s SmartTrack aligners as the best-selling aligners on the market and the appropriate comparator for purposes of secondary considerations. EX2025, 56-59; EX2026, ¶¶179-82. This not only supports the conclusion that ClearCorrect, as a competitor, was aware of Align’s SmartTrack aligners but also confirms their commercial success.

Contrary to the position taken here, Bay Materials (a Straumann company) and Dr. Osswald both asserted in IPR2022-01214 that Zendura FLX, the aligners of which are encompassed by the multilayer material patents’ claims, showed unexpected results. EX2025, 56-59; EX2026, ¶¶179-82; EX2014, ¶161.

These arguments confirm that ClearCorrect, by making aligners using Bay Materials’s Zendura FLX material, copied Align’s SmartTrack aligners and the associated ’384 patent claims. EX2014, ¶¶161-62. Furthermore, since aligners made with Bay Materials’s Zendura FLX material fall within the scope of the claims, Bay Materials’s arguments in IPR2022-01214 that such aligners show

unexpected results further support the presence of secondary indicia of nonobviousness associated with the present claims. *Id.*; *see* EX2025, 51-62.

Accordingly, ClearCorrect's awareness of Align's SmartTrack aligners and the substantial similarity of ClearCorrect's aligners to SmartTrack aligners confirms that ClearCorrect copied Align's SmartTrack aligners. This copying, as well as the arguments made by Bay Materials and Dr. Osswald before the Board of unexpected results related to SmartTrack and Zendura FLX, further confirm the nonobviousness of the '384 patent.

In addition to ClearCorrect, other competitors including Ormco Spark and Angel Align—and even individual dental labs and dental offices—now offer aligners using the Bay Materials Zendura FLX material, while yet more competitors have flooded the market with multi-layer aligners after Align introduced SmartTrack aligners. EX2016, ¶38. Conversely, very few aligner companies remain that make only single layer material aligners. *Id.*, ¶39. The widespread industry adoption of Align's patented technology offers yet more evidence of nonobviousness.

VII. THE PETITION FAILS TO NAME ALL REAL PARTIES-IN-INTEREST

A petition for *inter partes* review may be considered only if "the petition identifies all real parties in interest." 35 U.S.C. §312(a)(2). As Align has previously explained, while the petition lists multiple ClearCorrect and Straumann

entities as real parties in interest (RPI), other RPI remain unnamed. Paper 7 at 23-25; Paper 19 at 10-14.

For example, Straumann is the parent company of not only ClearCorrect but also Bay Materials. *See, e.g.*, EX1023, ¶¶4, 42; EX2008, ¶18 (ClearCorrect and Straumann asserting that accused aligners are "the direct result of years of research by ClearCorrect **and related company Bay Materials**"); EX2029 (Bay Materials is "part of the Straumann Group"). As explained above, Bay Materials previously has advanced arguments regarding unpredictability and objective indicia—using the same expert Petitioner relies on here—that are inconsistent with Petitioner's positions in this IPR. EX2025, 44, 46-47, 51-62. Despite this, or perhaps because of it, Petitioner has not identified Bay Materials as an RPI here. Yet Bay Materials is unquestionably "a clear beneficiary that has a preexisting, established relationship with the petitioner," both as a supplier to ClearCorrect and as a member of the Straumann corporate family. *Applications in Internet Time, LLC, v. RPX Corp.*, 897 F.3d 1336, 1351 (Fed. Cir. 2018).

Additionally, Straumann, a non-US conglomerate, has been active in acquiring ownership and forming strategic partnerships with various Chinese entities, entanglements in which ClearCorrect is also implicated. Paper 19 at 12-14. Yet none of these Chinese entities, including AlliedStar and aligner manufacturer Smartee, has been disclosed to the Office by Petitioner let alone

named as an RPI.

Accordingly, as Petitioner has failed to satisfy its obligation to identify all RPI in this proceeding and the one-year time bar has passed, the institution decision should be vacated and the petition dismissed. *See Corning Optical Communications RF, LLC v. PPC Broadband Inc.*, IPR2014-00040, Paper 68 (Aug. 18, 2015) (precedential).

VIII. CONCLUSION

Accordingly, for at least the reasons set forth above, the petition fails to meet its burden of establishing the unpatentability of claims 1-4, 6-14, 16-24, and 26-30 of the ’384 patent.

Respectfully submitted,

Date: February 20, 2026

/ Michael T. Rosato /
Michael T. Rosato, Lead Counsel
Reg. No. 52,182

IX. APPENDIX – EXHIBIT LIST

EXHIBIT NO.	DESCRIPTION
2001	Claim Construction Order, *Align Technology Inc. v. ClearCorrect Operating LLC*, et al., No. 24-cv-00187-ADA-DTG (W.D. Tex. Jun. 5, 2025)
2002	Scheduling Order, *Align Technology Inc. v. ClearCorrect Operating LLC*, et al., No. 24-cv-00187-ADA-DTG (W.D. Tex. Aug. 5, 2024)
2003	Fourth Scheduling Order, *Align Technology Inc. v. ClearCorrect Operating LLC*, et al., No. 24-cv-00187-ADA-DTG (W.D. Tex. Jun. 12, 2025)
2004	DocketNavigator Median Time-to-Trial Statistics for Judge Alan D. Albright and for W.D. Tex. Overall, July 1, 2020 – July 1, 2025
2005	Judge Albright Patent FAQ, https://www.txwd.uscourts.gov/for-attorneys/judge-albright-courtroom-faq/ (accessed July 3, 2025)
2006	Joint Request to Amend the Claim Schedule, *Align Technology Inc. v. ClearCorrect Operating LLC*, et al., No. 24-cv-00187-ADA-DTG (W.D. Tex. Jun. 6, 2025) (ECF No. 187)
2007	Preliminary Claim Constructions, *Align Technology Inc. v. ClearCorrect Operating LLC*, et al., No. 24-cv-00187-ADA-DTG (W.D. Tex. Jan. 21, 2025)
2008	Defendants' Answer, Affirmative Defenses, and Counterclaims (Public Version), *Align Technology, Inc. v. ClearCorrect Operating LLC*, Case No. 6:24-CV-00187 (W.D. Tex. Jul. 16, 2024) (ECF No. 56)
2009	International Application Publication No. WO 2018/222864 to Stewart et al.
2010	U.S. Patent No. 10,946,630 to Stewart et al.
2011	U.S. Patent No. 7,641,828 to DeSimone et al.
2012	ClearCorrect Prior Art Narrowing Disclosure, *Align Technology, Inc. v. ClearCorrect Operating, LLC*, Civil Action No. 6:24-cv-00187-ADA-DTG
2013	[Reserved]

2014	Declaration of Dr. Robert Kimmel
2015	Curriculum Vitae of Dr. Robert Kimmel
2016	Declaration of Yan Chen - – Board and Parties Only
2017	Osswald Deposition Transcript
2018	Declaration of Naga Kusima
2019	Daniel J. Brunelle et al., "Optimization of poly(1,4-cyclohexylidene cyclohexane-1,4-dicarboxylate (PCCD) preparation for increased crystallinity," 47(11) *Polymer* 4094 (2006)
2020	James L. Throne, Understanding Thermoforming, Ch. 11 (2008)
2021	U.S. Patent No. 8,178,647 (Hawkins)
2022	ClearCorrect Support – Aligner FAQs, https://support.clearcorrect.com/hc/en-us/articles/204800937-Aligner-Material-FAQs
2023	ClearCorrect – The Premier Aligner Clinical Evidence Summary, https://www.straumann.com/content/dam/sites/clearcorrect/xy/landing/aao-2025/113896_ClearCorrect_PremierAligner_SummaryClinicalEvidence_Superside_V3.pdf
2024	Zendura Dental – Why Zendura, https://www.zenduradental.com/pages/why-choose-zendura
2025	*3M Co. v. Bay Materials LLC*, IPR2022-01214, Paper 21 (Patent Owner's Response) (Apr. 12, 2023)
2026	*3M Co. v. Bay Materials LLC*, IPR2022-01214, Exhibit 2006 (Osswald Declaration, Public Version) (Excerpt) (Apr. 12, 2023)
2027	Align Technology, "SmartTrack: Technology that's made to move" (2018)
2028	Timothy Wheeler et al., "Effect of aligner material on orthodontic tooth movement," 1(1) Journal of Aligner Orthodontics 21 (2017)
2029	Zendura Dental – The Zendura Story, https://www.zenduradental.com/pages/the-zendura-story
2030	Align Technology 2013 Q1 Financial Slides

2031	Align Technology 2012 Q4 Financial Slides
2032	Align Technology 2025 Q5 Financial Slides
2033	*3M Co. v. Bay Materials LLC*, IPR2022-01214, Paper 77 (Final Written Decision) (Jan. 16, 2024)

CERTIFICATE OF COMPLIANCE

Pursuant to § 42.24(d), the undersigned certifies that this paper contains no more than 14,000 words, not including the portions of the paper exempted by § 42.24(b). According to the word-processing system used to prepare this paper, the paper contains 13169 words.

Respectfully submitted,

Date: February 20, 2026

/ Michael T. Rosato /
Michael T. Rosato, Lead Counsel
Reg. No. 52,182

CERTIFICATE OF SERVICE

I certify that the foregoing Patent Owner's Response and EX2014 - 2033 were served on this 20th day of February, 2026, on Petitioner at the following electronic service addresses:

Charles Collins-Chase
Luke McCammon
Melanie Magdun
Kyle Howarth
Finnegan, Henderson, Farabow,
Garrett & Dunner, LLP
Charles.Collins-Chase@finnegan.com
Luke.McCammon@finnegan.com
Melanie.Magdun@finnegan.com
Kyle.Howarth@finnegan.com

Respectfully submitted,

Date: February 20, 2026

/ Michael T. Rosato /
Michael T. Rosato, Lead Counsel
Reg. No. 52,182