UNITED STATES PATENT AND TRADEMARK OFFICE

BEFORE THE PATENT TRIAL AND APPEAL BOARD

CLEARCORRECT OPERATING LLC,
Petitioner,

v.

ALIGN TECHNOLOGY, INC.,
Patent Owner.

IPR2025-00818
IPR2025-00819
IPR2025-00820
IPR2025-00821
Patent Nos. 10,973,613,
11,154,384,
11,648,090,
11,648,091

DECLARATION OF DR. ROBERT KIMMEL

TABLE OF CONTENTS

I. QUALIFICATIONS 1

II. SCOPE OF WORK 7

III. LEGAL STANDARDS 8

IV. OVERVIEW OF THE ’613, ’384, ’090, AND ’091 PATENTS 11

V. OVERVIEW OF ASSERTED REFERENCES 16

A. Tadros (EX1003) 16

B. Kalili (EX1005) and Texin 990R (EX1009) 17

C. Porter (EX1006) 18

D. Wen (EX1008) 19

VI. LEVEL OF SKILL IN THE ART 21

VII. CLAIM CONSTRUCTION 23

VIII. ’613 GROUNDS 1-2; ’384 GROUND 1; ’090 GROUNDS 1-2; AND ’091 GROUNDS 3-4 – A POSITA WOULD NOT HAVE ARRIVED AT THE CLAIMED MULTILAYER ALIGNERS BASED ON TADROS 23

A. The Material of Tadros Relied on by Dr. Osswald Fails to Satisfy the Claims 24

B. A POSITA Would Not Have Been Motivated with a Reasonable Expectation of Success to Arrive at the Claimed Invention by Modifying Tadros 28

C. A POSITA Would Not Be Motivated to Substitute Porter’s Copolyester for Tadros’s Polycarbonate Mixture 34

IX. ’613 GROUNDS 2 AND 3; ’384 GROUND 2; ’090 GROUNDS 2 AND 3; AND ’091 GROUNDS 2 AND 4 – WEN FAILS TO SUPPORT THE PROPOSED COMBINATION 38

X. ’613 GROUND 3; ’384 GROUND 2; ’090 ALL GROUNDS; AND ’091 ALL GROUNDS – A POSITA WOULD NOT HAVE USED COPOLYESTER BASED ON PORTER 49

XI. ALL GROUNDS – USE OF ADHESIVE LAMINATION IS NOT JUSTIFIED 57

A. A POSITA Would Not Have Been Motivated to use Adhesive Lamination in the Combinations Proposed by Dr. Osswald 57

B. The Proposed Use of Adhesive Lamination is Incompatible with Claims 12-15 of the ’613 Patent 63

XII. SECONDARY INDICIA SUPPORT THE PATENTABILITY OF THE MULTILAYER APPLIANCE PATENTS’ CLAIMS 66

A. The Multilayer Appliance Patents’ Claims Encompass SmartTrack (ST30) Aligners 66

1. The ’613 Patent 67

2. The ’384 Patent 71

3. The ’090 Patent 76

4. The ’091 Patent 78

B. Align’s Testing Demonstrates Superiority of ST30 Aligners 84

C. Orthodontic Appliances Made According to the Multilayer Appliance Patents Show Unexpectedly Superior Properties 86

D. Evidence of Copying Supports the Multilayer Appliance Patents’ Nonobviousness 91

XIII. CONCLUDING STATEMENTS 94

XIV. EXHIBIT LIST 96

I, Robert Kimmel, declare as follows:

I. QUALIFICATIONS

1. I have been retained by Counsel on behalf of Align Technology, Inc. to provide opinions in this matter related to my experience and expertise. My opinions are based on my skills, knowledge, training, education, and experience in matters of this nature, and my examination of the materials utilized in preparing this report.

2. The following is a brief summary of my background and qualifications. I have summarized my education and professional background in this section. I have also included a current version of my curriculum vitae (CV) attached as EX2015. My CV sets forth the details of my educational history, work history, publications, and other related experience.

3. I received the degrees of Bachelor of Science in Materials Engineering in 1964, Master of Science in 1965, Materials Engineer in 1967 (an advanced degree between the Master's Degree and the Doctorate), and Doctor of Science in Materials Engineering in 1968 from the Massachusetts Institute of Technology. In the course of these studies, I conducted the research and authored two theses and my doctoral dissertation. I presented the results of all this work at meetings of the Polymer Physics Division of the American Physical Society and published them in highly-regarded peer-reviewed journals. Beginning in the

summer after my freshman year and continuing until I completed my Master's degree, I was employed in M.I.T. laboratories to conduct physical and mechanical property testing of polymers. During the summer after I completed my Master's degree, I was employed at the U.S. Army Natick Laboratories to investigate the mechanical properties of polycarbonate plastics.

4. I was employed by the Hoechst Celanese Corporation and its predecessor companies from 1968 through 1998. I held a variety of technical and marketing positions of increasing responsibility, including over 30 years in positions relating to packaging and plastics and over 27 years in positions related to the development, manufacture and marketing of polymers and products of polyethylene terephthalate (PET) and related polyester polymers. For three years in the early-1990s, I served as Head of the New Films Business Development Department for Hoechst AG in Wiesbaden, Germany. I supervised the work of a team of scientists charged with new process and product development supporting all of Hoechst's various film businesses. For several years in the mid-1990s, I led a multi-functional team responsible for the development and marketing of multi-layer polymer sheets based on PET and specialty, proprietary polymers. During this time, I and my team were responsible for a state-of-the-art, three-layer coextrusion line capable of converting a wide variety of polymers into one-meter-wide multilayer plastic film and sheet. We worked with companies to develop

products using our sheet materials, several of which involved unique thermoforming applications.

5. In 1999, I joined the faculty of the Packaging Science Department at Clemson University, Clemson, South Carolina. In December 2006, I was appointed Chair of the Packaging Science Department, a position I held until September 2010, when the Department was merged with another department in the College to form a larger entity. From 2010 until my retirement in 2022, in addition to my other responsibilities, I served as Director of the Packaging Science Program. In this role, I was responsible for curriculum development and assessment for the Program and strategic leadership of the Packaging Science faculty. In addition, I developed and managed relationships with companies around the world that interfaced and supported research and service work with the Packaging Science Program. These companies cover the entire range of industries involved with the packaging industry, including materials suppliers, machinery suppliers, converters of materials into containers, and end users.

6. My teaching responsibilities in the Packaging Science Department included the development and teaching of undergraduate and graduate courses in flexible packaging and semi-rigid/rigid packaging, focused on plastic materials. The subject matter of all these courses included the manufacturing and selection of materials and the design and manufacture of containment or packaging systems for

packaging applications. Two of these courses included the manufacturing and specification of thermoformed articles and the polymers from which they can be made. These courses included hands-on laboratory sessions, in which the students were required to use thermoforming equipment and apply their understanding of the interactions between the plastics and the thermoforming processes.

7. During my first few years as a member of the Packaging Science faculty, I was responsible for establishing a new laboratory to support teaching and research in polymers, plastics and plastics converting. Among many other pieces of equipment, I secured and installed a small sheet extrusion line, a three-layer coextrusion line for blown film, equipment for adhesive lamination of films and sheet including water-based, solvent-based and solventless adhesives, and lab-scale and continuous thermoforming equipment.

8. From 2004 until my retirement, I taught the capstone course of the Packaging Science curriculum, Package Design and Development. This capstone course was intended for Bachelor's degree students and focused on a systematic procedure for package design. In the course, I guided teams of Bachelor's degree students through this process using real-world problems.

9. During the twenty-two years of my involvement with this course, I mentored more than 200 industry-sponsored team projects addressing a diverse assortment of problems including, among other subjects, retail food products

(human and animal), appliances, printers, automotive components, electronic devices, and many others. The same systematic design process was applied to each of these problems. Several of these projects included the design and specification of thermoformed packages, including medical device packaging.

10. In 2004, I and one of my colleagues co-founded the Clemson University Center for Flexible Packaging. I served as Director of the Center from its founding until my retirement at the end of 2022. The Center is an academic-industry consortium dedicated to teaching, research, and service in flexible packaging. The Center provides the domestic and international packaging industries with a wide range of testing services, and with prototyping and product development services using cast and coextruded blown film manufacture, coating, adhesive lamination, thermoforming and a variety of package manufacturing.

11. On my retirement from Clemson at the end of 2022, I became Associate Professor Emeritus of Packaging Science and continue to advise graduate students and serve as a technical consultant to organizations and companies in the plastics and packaging fields.

12. I am the author or co-author of dozens of articles relating to plastics and materials engineering, multi-layer or multi-component plastic materials for packaging, biopolymers (*i.e.*, plastics derived from biological sources), and other

subjects in packaging. I have also contributed chapters to books related to various issues in packaging.

13. Over the course of my six-decade-long career, I have presented at numerous scientific and industry conferences across the world, including those of the International Association of Packaging Research Institutes ("IAPRI"). I was the program chair for the Flex-Pack '99 Europe conference in 1999 and the organizer and program chair for the 24th IAPRI Symposium on Packaging in May 2009. I served seven times as a member of three-person judging panels for the Flexible Packaging Achievement Awards of the Flexible Packaging Association and the Association of Industrial Metallizers, Coaters and Laminators Product and Technology Awards. I have been recognized for my work in the field of packaging by my peers and am a member of the Institute of Packaging Professionals, the Society of Plastics Engineers, and the International Safe Transit Association.

14. I am a named inventor on six U.S. patents and four foreign patents relating to polymers (*i.e.*, plastics), six of which relate to multi-layer plastics for packaging applications including blow-molded bottles and thermoformed articles. These U.S. patents include: R. M. Kimmel, A.E. Wolf, J.A. Penoyer and D.D. Roth, U.S. Patent 6,426,128 "Co-processable multi-layer laminates for forming high strength, haze-free, transparent articles and methods of producing same" July 31, 2002; J.E. Kuder, R.N. Demartino, D. Cangiano, R.D. Jester, A.E.Wolf, R. M.

Kimmel, S.H. Rounsville, J.A. Penoyer, U.S. Patent 6,312,772 "Multilayer laminate formed from a substantially stretched non-molten wholly aromatic liquid crystalline polymer and non-polyester thermoplastic polymer" Nov. 6, 2001; R.D. Jester, A.E. Wolf, R. M. Kimmel, D. Cangiano and J.A. Penoyer, U.S. Patent 6,268,026 "Multilayer laminate formed from a substantially stretched non-molten wholly aromatic liquid crystalline polymer and non-liquid crystalline polyester and method for forming same" July 31, 2001.

II. SCOPE OF WORK

15. I understand that ClearCorrect Operating, LLC (ClearCorrect) filed petitions with the United States Patent and Trademark Office for *inter partes* review of U.S. Patent Nos. 10,973,613, 11,154,384, 11,648,090, and 11,648,091 (the '613 patent, the '384 patent, the '090 patent, and the '091 patent, each being EX1001 in IPR2025-00818 through -00821, respectively). In this declaration, when I refer to an exhibit relating to the inter partes review for one of these patents that differs between different proceedings, I will cite to that exhibit by appending the last three digits of the patent number to the front. For example, the '613 patent is 613-EX1001, the '384 patent is 384-EX1001, etc. I further understand that a trial was instituted based on that petition. I have been retained by Align Technology, Inc. ("Align") to offer an expert opinion relating to the arguments raised by ClearCorrect regarding the claims of these patents. I receive $550 per hour for my

services. No part of my compensation is dependent on my opinions or on the outcome of this proceeding.

16. I have been specifically asked to provide my opinion in response to the declarations of Dr. Osswald regarding the ’613 patent, the ’384 patent, the ’090 patent, and the ’091 patent (EX1007 in each of IPR2025-00818 through -00821, respectively). I have reviewed the ’613 patent, the ’384 patent, the ’090 patent, and the ’091 patent, Dr. Osswald’s declarations, and the exhibits cited in those declarations.

III. LEGAL STANDARDS

17. I understand that the Patent Office may cancel issued claims of the ’613 patent, the ’384 patent, the ’090 patent, and the ’091 patent if the Petitioner (here, ClearCorrect) demonstrates that the claims fail to satisfy the requirements of patentability. In particular, I understand that ClearCorrect has raised grounds arguing that that the claims each of these patents were unpatentable as obvious. I understand that the claims should be understood according to their ordinary and customary meaning as understood by a person of ordinary skill in the art (“POSITA”) at the time of the invention in light of the language of the claims, the specification, and the prosecution history of record.

18. I understand that a claimed invention is unpatentable for obviousness if the differences between the invention and the prior art are such that the subject

matter, as a whole, would have been obvious to a POSITA at the time the invention was made (i.e., at the critical date).

19. It is further my understanding that a determination of obviousness requires inquiries into: (1) the scope and contents of the art when the invention was made; (2) the differences between the art and the claims at issue; (3) the level of ordinary skill in the pertinent art when the invention was made; and, to the extent they exist, (4) secondary indicia of nonobviousness.

20. Such secondary indicia (or "secondary considerations") include: (a) commercial success of a product due to the merits of the claimed invention; (b) a long-felt, but unmet need for the invention; (c) failure of others to find the solution provided by the claimed invention; (d) deliberate copying of the invention by others; (e) unexpected results achieved by the invention; (f) praise of the invention by others skilled in the art; (g) the taking of licenses under the patent by others; and (h) the patentee proceeded contrary to the accepted wisdom of the prior art. Secondary considerations are relevant where there is a connection, or nexus, between the evidence and the claimed invention.

21. I understand that a claim is obvious if all of the claimed elements were known in the prior art and one skilled in the art would have combined the elements as claimed with a reasonable expectation of success. I understand that obviousness may also be shown by demonstrating that it would have been obvious

to modify what is taught in a single piece of prior art to create the patented invention or by combining teachings of two or more references. I understand that in order for a claimed invention to be considered obvious, there must be some rational underpinning for the proposed combination. I understand that hindsight must not be used when determining whether a POSITA would make the proposed combination. Thus, a conclusion of obviousness must be firmly based on knowledge and skill of a person of ordinary skill in the art at the time the invention was made without the use of post-filing knowledge.

22. I understand that in determining whether a particular combination of prior art teachings would have been obvious, the following are examples of approaches and rationales that may be considered:

(a) Combining prior art elements according to known methods to yield predictable results;

(b) Simple substitution of one known element for another to obtain predictable results;

(c) Use of a known technique to improve similar devices (methods, or products) in the same way;

(d) Applying a known technique to a known device (method, or product) ready for improvement to yield predictable results;

(e) Applying a technique or approach that would have been "obvious to try" (choosing from a finite number of identified, predictable solutions, with a reasonable expectation of success);

(f) Known work in one field of endeavor may prompt variations of it for use in either the same field or a different one based on design incentives or other market forces if the variations would have been predictable to one of ordinary skill in the art; or

(g) Some teaching, suggestion, or motivation in the prior art that would have led one of ordinary skill to modify the prior art reference or to combine prior art reference teachings to arrive at the claimed invention.

23. I understand that obviousness may be established by showing that all of the claimed elements were known in the prior art and one skilled in the art would have combined the elements as claimed by known methods with no change in their respective functions, and the combination would have yielded nothing more than predictable results to one of ordinary skill in the art.

IV. OVERVIEW OF THE '613, '384, '090, AND '091 PATENTS

24. The title of each of the '613 and '384 patents is "Multilayer Dental Appliances and Related Methods and Systems"; the title of each of the '090 and '091 patents is "Multilayer Polymer Sheets." Each of these patents, which I refer to herein as the "multilayer appliance patents," shares a common specification and

each includes claims relating to dental appliances formed from a multilayer sheet including a mix of hard and soft layers.

25. Each patent describes "[m]ultilayer orthodontic positioning appliances" that "apply forces to a tooth to generate movement of the tooth" to improve the positioning of a patient's teeth. 613-EX1001, 3:1-6. The multilayer appliances can have multiple layers configured to provide improved aligner performance, including improved material performance and stress relaxation properties, longer working range, increased durability, and improved elastic properties, reducing the need for additional aligners or mid-course correction during orthodontic treatment. *See* 613-EX1001, 2:2-10, 3:10-26.

26. The multilayer appliances described in the multilayer appliance patents can have layers including "a hard polymer layer" as well as "a soft polymer layer," they and may include additional layers of polymeric material. 613-EX1001, 5:18-21, 6:39-54. The layers can be formed of different materials, and in particular, the specification describes appliances that include a hard co-polyester layer, as well as including one or more soft layers formed of a thermoplastic polyurethane elastomer. 613-EX1001, 6:32-39. The multilayer appliance patents describe forming dental aligners by thermoforming a multilayer sheet over "a positive model of the patient's teeth in a target position" to fabricate each "appliance as a negative of the positive model." 613-EX1001, 3:46-54; *see id.*, Figs. 3-4.

27. These features are reflected in the claims of each of the multilayer appliance patents. For purposes of illustration, I have reproduced independent claim 1 for each of the multilayer appliance patents below:

’613 patent:

1. A method of making a dental appliance for positioning a patient’s teeth, the method comprising:

providing a sheet comprising three or more polymer layers, the three or more polymer layers comprising:

a hard polymer layer comprising a co-polyester and having a flexural modulus greater than about 150,000 psi; and

a soft polymer layer comprising a thermoplastic polyurethane elastomer and having an elongation at break of greater than about 200%, and a hardness from about 60 A to about 85 D;

providing a positive model of the patient’s teeth in a target position; and

fabricating an appliance as a negative of the positive model comprising thermoforming the sheet over the positive model.

’384 patent:

1. A dental appliance for positioning a patient’s teeth from a first arrangement toward a second arrangement, the dental appliance comprising:

a plurality of tooth-receiving cavities shaped to receive and resiliently reposition the patient’s teeth from the first arrangement toward the second arrangement;

three or more polymer layers, the three or more polymer layers comprising:

a hard polymer layer comprising a co-polyester and having a flexural modulus greater than about 150,000 psi; and

a soft polymer layer comprising a thermoplastic polyurethane elastomer and having an elongation at break of greater than about 200%, and a hardness from about 60 A to about 85 D.

’090 patent:

1. A method of making a multilayer dental aligner for repositioning a patient’s teeth from a first arrangement toward a second arrangement, the method comprising:

providing a multilayer sheet comprising three polymer layers, the three polymer layers comprising:

a first layer consisting of a co-polyester, the co-polyester having a flexural modulus greater than 150,000 psi, an elongation at yield of greater than 4%, a tensile modulus greater than 150,000 psi, a tensile strength at yield of 4000-6500 psi, and an elongation at break of greater than 70%; and

a second layer consisting of a thermoplastic polyurethane elastomer, the thermoplastic polyurethane elastomer having an ultimate tensile strength of greater than 5000 psi, an elongation at break of greater than 200%, and a hardness of 60A to 85D; and

a third layer;

wherein the co-polyester has an elastic modulus greater than the thermoplastic polyurethane elastomer;

providing a mold;

thermoforming the multilayer sheet over the mold to form a plurality of tooth-receiving cavities configured to receive and reposition the patient's teeth from the first arrangement toward the second arrangement; and

trimming excess material from the thermoformed multilayer sheet to form the multilayer dental aligner.

'091 patent:

1. A multilayer sheet comprising:

a first layer containing a single polymer, wherein the single polymer of the first layer is a co-polyester, and wherein the first layer has a flexural modulus greater than 150,000 psi, an elongation at yield of greater than 4%, a tensile modulus greater than 150,000 psi, a tensile strength at yield of 4000-6500 psi, and an elongation at break of greater than 70%; and

a second layer containing a single polymer, wherein the single polymer of the second layer is a thermoplastic polyurethane elastomer, and wherein the second layer has an ultimate tensile strength of greater than 5000 psi, an elongation at break of greater than 200%, and a hardness of 60A to 85D; and

a third layer;

wherein the first layer has an elastic modulus greater than the second layer; and

wherein the multilayer sheet is incorporated into an orthodontic appliance.

V. OVERVIEW OF ASSERTED REFERENCES

28. In this section, I provide a brief overview of the references applied as prior art in Dr. Osswald's declarations.

A. Tadros (EX1003)

29. Tadros is a patent publication that describes "an appliance for use in an oral cavity," where the "appliance comprises a polymeric shell that comprises a polymeric mixture," which Tadros explains is a mixture of "two or more thermoplastic polymers." EX1003, Abstract, [0022]. This "polymeric mixture" is what Dr. Osswald calls a "hard layer" or "hard polymer layer." *See* 613-EX1007, ¶149; 384-EX1007, ¶150; 090-EX1007, ¶159; 091-EX1007, ¶160. Dr. Osswald's assessment of Tadros is based on the assumption that in Tadros's exemplified mixture of poly(1,4-cyclohexane-dimethanol-1,4-cyclohexanedicarboxylate) (PCCD) and polycarbonate, PCCD is a copolyester. *See* 613-EX1007, ¶¶169-70; 384-EX1007, ¶¶173-74; 090-EX1007, ¶159; 091-EX1007, ¶160.

30. However, Tadros describes PCCD as a "polyester" and more specifically as a "cycloaliphatic polyester," not a copolyester. EX1003, [0022] ("polyesters such as … PCCD"), [0024] ("polycarbonate-cycloaliphatic polyester mixture"), [0050]-[0051] ("A preferred cycloaliphatic polyester is PCCD…."). Tadros describes PCCD as being formed by "recurring units of" a single monomer

according to formula (VIII) (reproduced below), making PCCD a homopolymer, not a copolymer (and thus, not a copolyester).

(VIII)

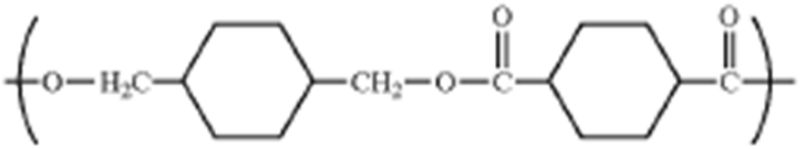

EX1003, [0050]; *see also* EX2019, 4101 ("PCCD homopolymer"), table 6; EX2020, 173 (distinguishing homopolymers and copolymers).

31. Dr. Osswald also relies on Tadros's disclosure that "the appliance may comprise additional layers disposed upon the sheet comprising the polymeric mixture." EX1003, [0073]), and he suggests that Tadros singles out polyurethanes as "preferred." *See, e.g.*, 090-EX1007, ¶189 ("those soft layers are preferably 'elastomers,' such as 'polyurethanes.'"); 091-EX1007, ¶264 (same); 613-EX1007, ¶168 ("Tadros discloses that preferred polymers for the additional soft outer layers are 'elastomers,' including 'polyurethanes….'"); 613-EX1007, ¶172 (same). However, Tadros never describes polyurethanes as preferred. The only elastomer Tadros calls preferred is the copolyester ether "ECDEL 9966." EX1003, [0073]. Tadros mentions polyurethane only once—seventh among more than 30 different categories of elastomers that it calls "[s]uitable." EX1003, [0073].

B. Kalili (EX1005) and Texin 990R (EX1009)

32. Kalili describes "[a]n invisible removable orthodontic repositioning appliance" having a soft inner lining and a hard outer lining (i.e., two layers). EX1005, Abstract, [0007], [0009]. Texin 990R (EX1009) is a datasheet for a polyurethane material that Kalili says may be used to form the soft inner lining. *See* EX1005, [0069]. Dr. Osswald relies on the Texin 990R datasheet for the material properties of such a soft layer. *See, e.g.*, 613-EX1007, ¶172; 384-EX1007, ¶176; 090-EX1007, ¶197; 091-EX1007, ¶271.

33. For its outer lining, Kalili discloses that while this layer may be formed of polycarbonates, numerous other types of materials alternatively may be used. EX1005, [0053]. These materials, such as "polyacetates, polyolefins, polyamides, [and] polystyrenes," are materials that were known to be manufactured without BPA. *Id.* Kalili does not disclose copolyesters as suitable for use in an aligner.

C. Porter (EX1006)

34. Porter is an article titled "Dishwasher Safe: New Clear Copolyester Is Tougher, More Heat-Resistant, and Processes Easier, Too." EX1006, 60. Porter describes a particular copolyester material, Tritan TX 1000 from Eastman Chemical, as suitable for kitchenware and other consumer products. *See* EX1006, 5-6, FIG. 2. Porter identifies Tritan as particularly suitable for thick-walled consumer products designed for holding food and water, such as CamelBack water

bottles, Vita-Mix blenders, and a "thick-walled soup bowl," EX1006, 8-9. Each of these examples are manufactured using injection-molding techniques, not thermoforming. *See id.* Porter also highlights Tritan's improved resistance to heat, hydrolytic and chemical attack, and applied stress in response to environmental conditions found in dishwashers. EX1006, 6.

35. Porter mentions Tritan can be thermoformed or extruded into a sheet or flat film, but it never discusses forming Tritan into multilayered sheets or combining Tritan with other polymers. *See* EX1006, 6, 7. Porter also never mentions any orthodontic or dental applications. In fact, the material disclosed in Porter—Tritan TX1000—was known only as a suitable consumer-grade plastic, not a medical-grade plastic, designed for molding applications. *See* EX1118, 7-8.

D. Wen (EX1008)

36. Wen describes a manufacturing approach to thermoforming a multi-layer dental aligner in which an aligner is assembled by combining multiple sheets during thermoforming. *See* EX1008, [0205]-[0213]. A first heated sheet is vacuum-formed over a patient's physical tooth model to form a first aligner layer by causing the softened sheet to conform to the shape of the physical model. EX1007, [0205]. A second heated sheet can then be vacuum-formed on top of the first to produce a second aligner layer of a two-layered aligner. EX1008, [0206].

This process is illustrated in Figs. 13-14 of Wen, with a first sheet 1410 placed over a tooth model and a second sheet 1510 placed over the first:

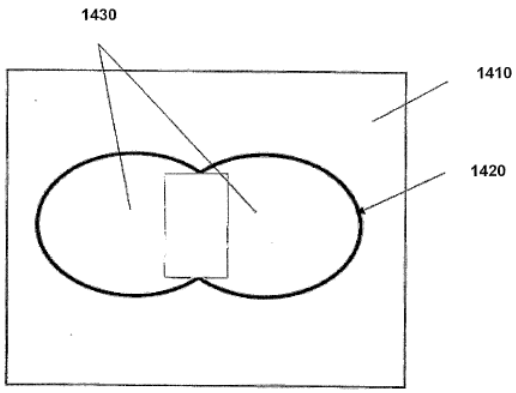

Figure 13

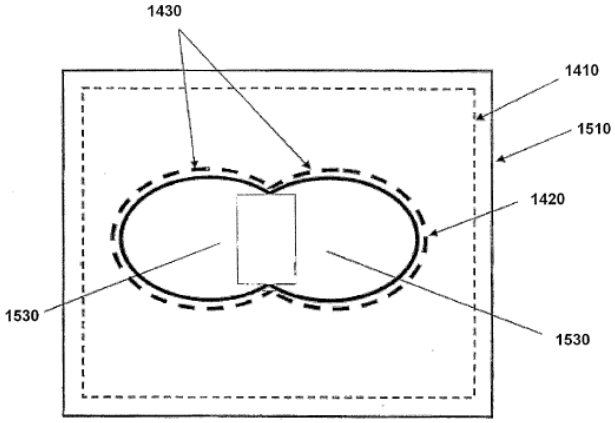

Figure 14

EX1008, Figs. 13-14.

37. To better conform an aligner layer to the physical tooth model, Wen teaches that "rather than forming a dental aligner by a thick layer of the same aligner-making material, the aligner is formed by a plurality of thinner layers of aligner-making material using vacuum-forming." EX1008, [0212]. In this passage, Wen is describing successively heating and vacuum-forming thin sheets onto a tooth model, one atop the other. Because each individual thin sheet has greater flexibility, it is easier to bend, and for this reason, Wen explains that the thinner layers will "more easily conform[] to the physical tooth models than a single thick layer." EX1008, [0212]. Wen notes that this process of sequentially vacuum-forming thin sheets to the tooth model atop one another can include forming an

appliance using sheets of different materials since "[t]hinner films allow more intimate contact between polymer sheets and therefore help bond the films to one another." EX1008, [0213].

VI. LEVEL OF SKILL IN THE ART

38. I have been advised that "a person of ordinary skill in the art" (POSITA) is a hypothetical person to whom one could assign a routine task with reasonable confidence that the task would be successfully carried out. I have been advised further that, in determining the level of ordinary skill in the art that someone would have had at the time the claimed invention was made, one should consider: (1) the levels of education and experience of persons working in the field; (2) the types of problems encountered in the field; and (3) the sophistication of the technology. I understand that the Petitioner has identified the priority date for the multilayer appliance patents as May 14, 2012.

39. Dr. Osswald has provided a description of the person of ordinary skill for each of the multilayer appliance patents. Specifically, he states that a person of ordinary skill in the art

> would have had at least a four-year undergraduate degree in materials science, mechanical engineering, chemical engineering, or a closely related field and at least two years of experience in the field of polymer science, combined with at least two years of experience in the field of design, manufacture, and processing of thermoformable polymer sheets for use in various applications, such as in orthodontic and dental

> appliances. Additional education could substitute for professional experience and vice versa.

613-EX1007, ¶15; 384-EX1007, ¶15; 090-EX1007, ¶15; 091-EX1007, ¶15.

40. According to the standard identified by Dr. Osswald, I was at least a person of ordinary skill in the art as of the critical date he identifies for the multilayer appliance patents (May 14, 2012). Based on my specialized education, knowledge, training, and experience, I am familiar with the level of skill and understanding of a POSITA as of that date.

41. In this declaration, I apply a level of skill in the art not lower than the standard adopted by Dr. Osswald. However, I note that Dr. Osswald's description of a POSITA's experience specifies experience in "design, manufacture, and processing of thermoformable polymer sheets for use in *various applications, such as* in orthodontic and dental appliances," but he does not appear to require a POSITA to have an understanding of or experience with the design, manufacture, and processing of thermoformable polymer sheets for use in orthodontic or dental appliances specifically. Nonetheless, in forming my opinions with this declaration, my opinions have been informed by a declaration of Yan Chen, an inventor listed on the multilayer appliance patents, who has specific experience with the design, manufacture, and processing of orthodontic and dental appliances.

VII. CLAIM CONSTRUCTION

42. I have been advised that the claim terms of the claims in the multilayer appliance patents are to be given the plain and ordinary meaning that the terms would have to a person of ordinary skill in the art in question at the relevant priority date. I understand that the analysis focuses on how the patentee used the claim term in the claims, specification, and prosecution history. I also understand that dictionaries or other extrinsic sources may assist in determining the plain and ordinary meaning but cannot override a meaning that is unambiguous from the intrinsic evidence. I have followed these principles in my analysis throughout this declaration.

VIII. '613 GROUNDS 1-2; '384 GROUND 1; '090 GROUNDS 1-2; AND '091 GROUNDS 3-4 – A POSITA WOULD NOT HAVE ARRIVED AT THE CLAIMED MULTILAYER ALIGNERS BASED ON TADROS

43. In each of the grounds discussed in Dr. Osswald's declarations that involve the Tadros reference (EX1003), he proposes using an embodiment of Tadros, then substituting materials to arrive at a dental aligner for repositioning teeth that comprises three or more layers including a hard copolyester layer and a soft thermoplastic polyurethane layer. *See, e.g.*, 613-EX1007, ¶¶168-72; 384-EX1007, ¶¶168-76; 090-EX1007, ¶¶176-94; 091-EX1007, ¶¶254-78. These grounds modify the teachings of Tadros based on two to four other references: each ground adds Kalili (EX1005) and Texin 990R (EX1009), each ground for the

’090 and ’091 patents adds Porter (EX1006), and certain grounds further incorporate Wen (EX1008).

44. However, a POSITA would not have arrived at the proposed combination of materials based on the teachings of Tadros and these other references, as I explain below.

A. The Material of Tadros Relied on by Dr. Osswald Fails to Satisfy the Claims

45. For the ’613 and ’384 patents, Dr. Osswald proposes forming a three-layer sheet into an orthodontic appliance, starting from an embodiment described in Tadros paragraph 73 in conjunction with the material described in Tadros paragraph 68. 613-EX1007, ¶168; 384-EX1007, ¶172. This embodiment includes a sheet made of a polymeric mixture disposed between two “additional layers” that “generally comprise an organic polymer having a tensile modulus of less than or equal to about 1,000 N/mm^2.” EX1003, [0073].

46. For the mixture, Dr. Osswald proposes using a polymeric mixture of polycarbonate with another polymer. 613-EX1007, ¶169; 384-EX1007, ¶173. Specifically, he points to samples 4 and 5 in Tadros, which are a mixture of polycarbonate and poly(1,4-cyclohexane-dimethanol-1,4-cyclohexanedicarboxylate) (PCCD). 613-EX1007, ¶169; 384-EX1007, ¶173. Dr. Osswald describes the PCCD of this mixture as a “copolyester.” 613-EX1007, ¶169; 384-EX1007, ¶173; *see also* 090-EX1007, ¶182 (“Tadros highlights

comparative copolyesters (specifically, PCCD variations) as materials with better thermoforming capabilities than polycarbonate but insufficient modulus properties."); 091-EX1007, ¶257 (same). But Tadros indicates PCCD is a cycloaliphatic polyester. EX1003, [0050].

47. Dr. Osswald's discussion of how his combination is supposed to meet the material properties recited in the claims relies specifically on samples 4 and 5, both of which are blends of PCCD and polycarbonate. *See* 613-EX1007, ¶170; 384-EX1007, ¶174. He does not discuss what material properties would result from any other combination of materials.

48. I understand Dr. Osswald also confirmed when questioned that in giving his opinions in this case, he was under the impression that all cycloaliphatic polyesters (including PCCD) were copolyesters. EX2017, 22:13-24; *see also id.*, 23:18-24:8 (belief that Tadros's specific examples are all copolyester/polycarbonate mixtures).

49. Dr. Osswald is mistaken: not only are not all cycloaliphatic polyesters copolyesters, PCCD itself is not a copolyester. A polyester is a polymer formed of repeating monomer units, with each monomer formed from the reaction of a dicarboxylic acid (or an esterified dicarboxylic acid) and a diol. *See* EX1003, [0048]. A polymer formed of a chain of monomer units of the same kind is a homopolymer. EX2020, 173. A polymer formed of monomer units that are not of

the same kind is a copolymer. *Id.* To produce a copolyester, the monomer units used to form a polyester can be altered by incorporating either a second diacid, a second diol, or both, producing a polymer with different kinds of monomers.

50. A copolyester is a copolymer form of a polyester, which means that it is formed of two or more different kinds of polyester monomers. Tadros describes PCCD as a "cycloaliphatic polyester…having recurring units of formula (VIII)," which is the formula reproduced below.

(VIII)

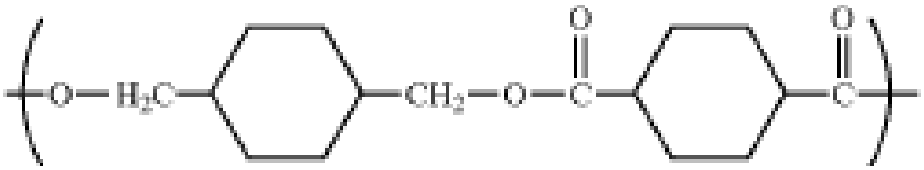

EX1003, [0050]. This recurring unit is a single monomer, meaning that PCCD is a homopolymer, not a copolymer. Indeed, other references confirm that PCCD is a homopolymer, not a copolymer. *See* EX2019, 4101 (referring to control sample of "PCCD homopolymer"), table 6 (PCCD homopolymer (PCCD18) formed of PCCD having of 3.2 % *cis* and 96.8 % *trans* isomers). Thus, as Tadros states, PCCD is a polyester, not a copolyester. *See also, e.g.*, EX1003, [0073] (identifying "copolyester ether" as a preferred elastomer and identifying "PCCD" as "[a]nother preferred organic polymer," but never indicating that PCCD is a copolyester).

51. Tadros describes a process of making precursor diacids which produces cis- and trans- isomers, which are separated by crystallization. EX1003, [0045]. Tadros further teaches that the trans-isomer is "especially preferred." For example, where PCCD is formed from all-trans monomers, each monomer would not only be of the same kind (a monomer according to formula VIII), but would also be stereochemically identical. A POSITA would understand this PCCD polymer to be an isotactic homopolymer, and thus a polyester, not a copolyester. *See* EX2019, 4101 ("PCCD homopolymer"); *see also id.*, table 6 (PCCD even as mix of isomers is a homopolymer).

52. Tadros describes that in some cases, a mix of cis- and trans- isomers may be used to produce monomer units (*see id.*, [0045], [0051]), and Tadros further indicates that copolyesters may optionally be used along with a mix of isomers (*see id.*, [0045]). However, even if a mix of cis- and trans- isomers were used for the monomer units shown in formula VIII, a POSITA would view such a polymer as a homopolymer. For example, a polymer formed of a random mix of cis- and trans- monomer units that are otherwise of the same kind is an atactic homopolymer, not a copolymer. *See, e.g.*, EX2019, 4101, table 6. Regardless, Tadros never indicates that the PCCD used in its samples involves a mix of monomer units. Tadros describes PCCD, including the PCCD used in samples 4

and 5, only as a polyester, not a copolyester. *See* EX1003, [0050]-[0051], [0093], claim 5.

53. If, as Dr. Osswald suggests, a POSITA were to use the preferred embodiment as exemplified in Tadros's samples 4 and 5 as a basis for aligner material development, this would be an aligner without a hard layer comprising copolyester, as samples 4 and 5 are a mix of PCCD and polycarbonate. PCCD has not been shown to be a copolyester, nor is polycarbonate (alone, or mixed with PCCD) a copolyester.

B. A POSITA Would Not Have Been Motivated with a Reasonable Expectation of Success to Arrive at the Claimed Invention by Modifying Tadros

54. Even setting aside the missing element I described above, a POSITA would not have been motivated to adapt Tadros's aligners to produce a multilayer aligner as claimed.

55. In the Tadros grounds, Dr. Osswald proposes arriving at a three-layer aligner as recited in the independent claims by substituting materials into Tadros's paragraph 73 embodiment, replacing at least the outer layers with a soft polymeric material based on Kalili and Texin 990R, and (in the '090 and '091 patents) replacing the mixture in the middle layer with a copolyester based on Porter.

56. Dr. Osswald also repeatedly described the performance of aligners made of multilayer materials, and particularly the effect on performance of

"replac[ing] layers with other polymers" as unpredictable. *E.g.*, 613-EX1007, ¶145; 384-EX1007, ¶146; 090-EX1007, ¶146; 091-EX1007, ¶147; *see also* 613-EX1007, ¶164 ("substituting one polymer for another in a dental aligner for repositioning teeth is unpredictable"); 384-EX1007, ¶165 (same); 090-EX1007, ¶155 (same); 091-EX1007, ¶156 (same).

57. In light of this conceded unpredictability and the lack of guidance in the prior art to arrive at the claimed combination of materials, as well as the deficiencies of the materials in Tadros's preferred embodiments, a POSITA would not have been motivated to combine Tadros with the other references as described by Dr. Osswald.

58. To begin with, Dr. Osswald's description of a POSITA's motivation regarding Tadros is inconsistent. In discussing the '090 and '091 patents, Dr. Osswald says that a POSITA would have avoided using Tadros's polycarbonate in aligners because it would be harmful to patients. *See, e.g.*, 090-EX1007, ¶161; 091-EX1007, ¶162. Yet when discussing the '613 and '384 patents, Dr. Osswald says that a POSITA would have selected Tadros's polycarbonate mixtures for combination with materials disclosed in Kalili. *See, e.g.*, 613-EX1007, ¶¶148-51; 384-EX1007, ¶¶146-49. This does not make sense. If, as Dr. Osswald argues, POSITAs viewed polycarbonates as harmful to patients, it does not make sense

that a POSITA would have looked to Tadros's polycarbonate mixtures, since using them would produce the harm Dr. Osswald says POSITAs would avoid.

59. And with regard to the '090 and '091 patents, even if a POSITA would have avoided polycarbonates, Dr. Osswald has not explained why a POSITA would have looked to the non-dental reference Porter for an unrelated material when Tadros already discloses numerous other types of suitable materials. Dr. Osswald's reasoning for a POSITA's arriving at a combination of copolyester and thermoplastic polyurethane elastomer rests on his misconception regarding PCCD, which (as I discussed above) he mistakenly presumes to be a copolyester. *See, e.g.*, 090-EX1007, ¶178 ("Further, Tadros highlights comparative copolyesters (specifically, PCCD variations) as materials with better thermoforming capabilities than polycarbonate but insufficient modulus properties."). In reality, Tadros's samples do not contain copolyester, and, if anything, a POSITA would view Tadros as pointing away from the claimed combination of materials.

60. Tadros describes producing a mixture of two or more polymers selected from a list of "[s]uitable examples of thermoplastic polymers" to be mixed together including a count of approximately 75 different, broad categories of polymer:

> Suitable examples of thermoplastic polymers are polyolefins such as polyethylene, polypropylene; polyamides such as Nylon 4,6, Nylon 6, Nylon 6,6, Nylon 6, 10, Nylon 6, 12; polyesters such as polyethelene

terephthalate (PET), polybutylene terephthalate (PBT), poly(1,4-cyclohexane-dimethanol-1,4-cyclohexanedicarboxylate) (PCCD), poly(trimethylene terephthalate) (PTT), poly(cyclohexanedimethanol-co-ethylene terephthalate) (PETG), poly(ethylene naphthalate) (PEN), poly(butylene naphthalate) (PBN); polyarylates, polyimides, polyacetals, polyacrylics, polycarbonates (PC), polystyrenes, polyamideimides, polyacrylates, polymethacrylates such as polymethylacrylate, or polymethylmethacrylate (PMMA); polyurethanes, polyarylsulfones, polyethersulfones, polyarylene sulfides, polyvinyl chlorides, polysulfones, polyetherimides, polytetrafluoroethylenes, polyetherketones, polyether etherketones, polyarylene ethers, polydimethylsiloxane, liquid crystalline polymers, polybenzoxazoles, polyoxadiazoles, polybenzothiazinophenothiazines, polybenzothiazoles, polypyrazinoquinoxalines, polypyromellitimides, polyquinoxalines, polybenzimidazoles, polyoxindoles, polyoxoisoindolines, polydioxoisoindolines, polytriazines, polypyridazines, polypiperazines, polypyridines, polypiperidines, polytriazoles, polypyrazoles, polypyrrolidines, polycarboranes, polyoxabicyclononanes, polydibenzofurans, polyphthalides, polyacetals, polyanhydrides, polyvinyl ethers, polyvinyl thioethers, polyvinyl alcohols, polyvinyl ketones, polyvinyl halides, polyvinyl nitriles, polyvinyl esters, polysulfonates, polythioesters, polysulfonamides, polyureas, polyphosphazenes, polysilazanes, and the like, as well as combinations comprising at least one of the foregoing polymers.

EX1003, [0022]. A POSITA seeking to use Tadros's examples to produce such a mixture would be choosing among $\frac{75\times74}{2} = 2775$ different combinations of materials, just for Tadros's polymeric mixture layer. Even excluding polycarbonate, this would leave 74 different types of material, or $\frac{74\times73}{2} = 2701$ different examples just of two-material mixtures.

61. As I noted above, Dr. Osswald also cites to Tadros's disclosure in paragraph 73 of additional layers, including a list of elastomers as a starting point to substitute materials to arrive at the claimed soft layer of thermoplastic polyurethane elastomers. 613-EX1007, ¶168; 384-EX1007, ¶172; 090-EX1007, ¶189; 091-EX1007, ¶264. These elastomers include the following list of about 30 different categories of elastomers, as well as mixtures and copolymers of each:

> silicones, fluoroelastomers, styrene-butadienes, styrene-isoprenes, polybutadienes, polyisobutylenes, polyurethanes, chlorosulfonates, butyls, neoprenes, nitrites, polyisoprenes, plasticized nylons, polyesters, polyvinyl ethers, polyvinyl acetates, polyisobutylenes, ethylene vinyl acetates, copolyester ethers, polyolefins, and polyvinyl chlorides, copolymer rubbers such as ethylene-propylene (EPR), ethylene-propylene-diene monomer (EPDM), copolyester ethers, styrene-isoprene-styrene (SIS), styrene-butadiene-styrene (SBS), nitrile-butadienes (NBR) and styrene-butadienes (SBR), mixtures such as ethylene propylene diene monomer (EPDM), EPR, or NBR, and mixtures and copolymers thereof.

EX1003, [0073].

62. Taken together, Tadros's 2775 different combinations of polymer types to be mixed along with 30 different categories of elastomer would provide $2775 \times 30 = 83{,}250$ different possible combinations, or $2701 \times 30 = 81{,}030$ combinations if polycarbonate were excluded. And even if a POSITA decided to go against Tadros's disclosure and abandon mixtures in favor of individual, non-polycarbonate materials, this would still leave $74 \times 30 = 2220$ different combinations of materials for layers.

63. Dr. Osswald's reasoning for selecting polyurethane is also misleading. Dr. Osswald suggests that Tadros singles out polyurethanes as "preferred." *See, e.g.*, 090-EX1007, ¶189 ("those soft layers are preferably 'elastomers,' such as 'polyurethanes.'"); 091-EX1007, ¶264 (same); 613-EX1007, ¶168 ("Tadros discloses that preferred polymers for the additional soft outer layers are 'elastomers,' including 'polyurethanes….'"); 613-EX1007, ¶172 (same). However, Tadros never describes polyurethanes as preferred. The only elastomer Tadros calls preferred is the copolyester ether "ECDEL 9966." EX1003, [0073]; *see* EX2021, 4:25-31 (describing ECDEL 9966 as an example of a copolyester ether). Tadros mentions polyurethane only once among about 30 different categories of elastomers that it calls "[s]uitable." EX1003, [0073]. And of course, each of these categories, including polyurethanes, represents many different types of materials.

Thus, a POSITA would not have viewed Tadros as guiding them to the combination of materials recited in the claims. For example, a POSITA would have had little reason to select TEXIN 990R in particular.

C. A POSITA Would Not Be Motivated to Substitute Porter's Copolyester for Tadros's Polycarbonate Mixture

64. In Grounds 1 and 2 for the '090 patent and Grounds 3 and 4 for the 091 patent, Dr. Osswald proposes replacing Tadros's polycarbonate mixture with a layer of pure copolyester, which he selects as Porter's Tritan TX 1000 material. 090-EX1007, ¶162 ("Tritan copolyester, as disclosed in Porter"); 091-EX1007, ¶260; *see* EX1006, Figs. 1-4 (each disclosing Tritan TX 1000).

65. In my opinion, this substitution would be inconsistent with the teachings of Tadros. Tadros makes clear repeatedly, throughout the entire specification, that its primary objective is forming aligners with a layer formed by a polymeric mixture. Tadros's abstract specifically ties its focus to a polymeric mixture. *See* EX1003, Abstract ("[T]he appliance comprises a polymeric shell that comprises a polymeric mixture…. [T]he appliance comprises a polymeric shell that comprises a polymeric mixture…."). The summary repeats this same teaching. *See* EX1003, [0006] ("polymeric mixture"), [0007] ("polymeric mixture"), [0008] ("polymeric mixture"). The use of polymeric mixture is echoed over and over again throughout the detailed description. *See, e.g.*, EX1003, [0015] ("polymeric mixture"), [0016] ("polymeric mixtures"), [0022] ("polymeric mixture"), [0023],

[0024]. The specific examples that Dr. Osswald has cited in Tadros (samples 4 and 5) are both polymeric mixtures. EX1003, [0093]. Likewise, the samples disclosed in Tables 9, 10, and 12 are all polymeric mixtures. *See* EX1003, tables 9, 10, 12. Indeed, where Tadros describes non-mixtures, it is as components to be mixed or as comparative samples. *See, e.g.*, EX1004, [0097], [0108]-[0110], tables 2, 7.

66. Given Tadros's unvarying emphasis on polymeric mixtures as a fundamental aspect of its aligner layers, a POSITA would have viewed abandoning polymeric mixtures in favor of single polymers as a dubious proposition. As discussed below, Dr. Osswald's proposed reasons for doing so would not have led a POSITA to make his proposed substitution.

67. Dr. Osswald suggests that a POSITA would have substituted Porter's Tritan TX1000 copolyester for Tadros's polycarbonate mixture to avoid exposure to BPAs (*see* 090-EX1007, ¶¶161-62; 091-EX1007, ¶¶259-60); however, even if a POSITA would have seen this as a reason to turn away from polycarbonate, this objective would not direct the POSITA to Tritan TX1000 in particular. As I noted above, Tadros teaches about 75 different types of material that can be mixed to produce its main aligner layer, only one of which is polycarbonate. *See* EX1003, [0022]. A POSITA deciding to avoid polycarbonate would naturally have selected any of the thousands of other mixtures of materials taught by Tadros, rather than

looking to abandon Tadros's central concept of polymer mixtures in favor of an entirely different material that was not a mixture.

68. Dr. Osswald also suggests a POSITA would have selected Tritan TX1000 because its glass transition temperature was not so high that it would prevent thermoforming. 090-EX1007, ¶¶159, 162; 091-EX1007, ¶¶257, 260. However, again, this does not explain why a POSITA would be led away from the polymeric mixtures that Tadros teaches already provide the properties Tadros desires, including glass transition temperatures as well as other properties like tensile modulus and stress relaxation. *See, e.g.*, EX1003, [0022], [0068], [0115], tables 2, 4, 9.

69. Dr. Osswald also asserts that Porter teaches that "Tritan was recognized as effective in thermoforming processes and extruded-sheet applications and durable in the 'harsh' environments of 'heat, hydrolytic and chemical attack, and applied stress' required for dental aligners." 090-EX1007, ¶186; 091-EX1007, ¶261. However, as I explain in section X, this is incorrect: Porter never addresses dental aligners, the "heat, hydrolytic and chemical attack" it refers to involve dishwasher cleaning, not mouths. A POSITA would not have viewed these statements from Porter as applicable to Tritan's performance in the intraoral environment encountered by orthodontic aligners.

70. Indeed, the plastic described by Porter, Tritan TX1000, is not even a medical-grade plastic; as its datasheet indicates, Tritan TX1000 was appropriate for use in molded appliances, durable consumer goods, and houseware, not medical applications. *See* EX1118, 7-8. Eastman's practice was to specifically mention suitability for medical applications on its datasheets, where applicable. *See id*. 1, 5. A POSITA would not have viewed this material as suitable for use in a medical device like a dental aligner, which is worn in the mouth to adjust teeth and must satisfy safety requirements as a Class II medical device. *See* EX2016, ¶22. A POSITA would thus view Porter's material as inapplicable and inappropriate for use in developing a dental aligner and would not have looked to Porter when developing polymeric orthodontic appliances.

71. As I also explain in section X, Dr. Osswald's reference to "industry success in replacing polycarbonate with Tritan" (090-EX1007, ¶¶99, 163; 091-EX1007, ¶¶97, 183) mischaracterizes Rafih and would not have been seen as supporting use in a dental aligner like Tadros's.

72. Accordingly, Dr. Osswald has failed to show that a POSITA would have been motivated to replace Tadros's polymeric mixture with Porter's copolyester with a reasonable expectation of success.

IX. ’613 GROUNDS 2 AND 3; ’384 GROUND 2; ’090 GROUNDS 2 AND 3; AND ’091 GROUNDS 2 AND 4 – WEN FAILS TO SUPPORT THE PROPOSED COMBINATION

73. In each of the grounds discussed in Dr. Osswald’s declarations that involve the Wen reference (EX1008), he proposes modifying a layered material by subdividing a single layer into “two or more thinner (but cumulatively equivalently thick) layers of the same material.” 613-EX1007, ¶¶208, 214; 384-EX1007, ¶214; *see* 090-EX1007, ¶¶220 (“a POSITA would have two thinner layers of the hard Tritan layer (totaling the same overall thickness as the single layer)”), 232 (“two or more thinner layers of the same material that totaled the same overall thickness as the single layer”); 091-EX1007, ¶¶212 (“two or more thinner layers of the same material, totaling the same overall thickness as the single layer”), 326 (“multiple thinner layers of the same polymer (collectively having the same overall thickness)”).

74. In each of these combinations, Dr. Osswald proposes modifying a multilayer sheet by replacing a polymeric layer with two (or more) identical polymeric layers laid adjacent to each other, such that the resulting material and thickness is the same as the original, but the number of layers increases by one. For example, in ground 3 of the ’613 patent, Dr. Osswald describes a combination in which two layers (including a hard layer produced by substituting a different material with Tritan copolyester) are made into three layers by taking the single

hard layer and replacing it with two identical, adjacent layers. 613-EX1007, ¶¶213-20. I have reproduced his illustration of this configuration below.

613-EX1007, ¶219. Dr. Osswald's other proposals make similar modifications, though the subdivided material varies and in some cases he proposes more than one subdivision (e.g., one layer into three, or each of two layers into two for a total of four, etc.). *See* 613-EX1007, ¶¶208-09, 219, 226, 228, 244; 384-EX1007, ¶216; 090-EX1007, ¶¶222, 242, 253; 091-EX1007, ¶¶212, 236, 245, 329.

75. In each of these proposed combination, Dr. Osswald describes forming a multilayer sheet having each of these three or more layers, and subsequently thermoforming that multilayer sheet over a mold to form an orthodontic appliance. *See, e.g.*, 613-EX1007, ¶155; 384-EX1007, ¶156; 090-EX1007, ¶174; 091-EX1007, ¶175.

76. Dr. Osswald identifies two teachings in Wen that he views as supporting his proposed combinations: (1) a teaching that "thinner sublayers conform better to tooth models, allowing for more effective tooth repositioning"; and (2) a teaching that "using thinner sublayers improves bonding between layers,

particularly between layers having disparate properties." 613-EX1007, ¶¶152-53; 384-EX1007, ¶¶153-54; 090-EX1007, ¶¶171-72; 091-EX1007, ¶¶172-73. In these sections, Dr. Osswald cites both to Wen and to subsection IV.B.2 of his declaration's "technological background" discussion. However, neither the cited teachings of Wen nor those of the other prior art references support Dr. Osswald's proposal.

77. Regarding the first alleged teaching, that "thinner sublayers conform better to tooth models, allowing for more effective tooth repositioning," Dr. Osswald cites to EX1051 (Bedard) at 3:55-67 and EX1008 (Wen) at [0212]. 613-EX1007, ¶52; 384-EX1007, ¶52; 090-EX1007, ¶52; 091-EX1007, ¶52. However, neither reference's teaching lines up with Dr. Osswald's proposal.

78. The cited portion of Bedard reads as follows:

> The inventors recognize that the laminate of the present invention dental appliance could alternatively include multiple thinner layers of strengthening material(s) which together form a strengthening layer equivalent; or multiple thinner layers of soft material(s) which together form a soft material layer equivalent; or groups of multiple thinner layers with each group working together to form a strengthening layer equivalent and a soft layer equivalent. The underlying concept remains that at least two layers of materials with different property are present in the laminate and working together to contribute to the final dental appliance product, with one layer proving flexible strength and the other layer providing a soft surface.

EX1051, 3:55-67. Bedard in this paragraph describes that the "underlying concept remains that at least two layers of materials with different property [*sic*] are present in the laminate, … with one layer proving flexible strength and the other layer providing a soft surface." *Id.*

79. In other words, Bedard is describing including different adjacent layers, with each providing its respective material properties to the combined structure, which acts like a single effective layer. But this paragraph says nothing about thinner layers conforming better to tooth models or such conformance providing better tooth positioning. Indeed, Bedard describes that multiple soft layers behave like a soft layer material equivalent—that is, multiple layers of a soft material act in a manner as though they were a single soft layer. *See also id.* (same for hard "strengthening" layers) Where, as Dr. Osswald proposes, two (or more) thin layers of identical material are disposed adjacent to one another, a POSITA would have understood that the cited portion of Bedard proposes that these would behave no better than a single, thicker layer. Indeed, not only would a POSITA have expected no benefit from this type of change, they would also have expected adding additional layers in this way would involve increased cost and may introduce new points of failure (e.g., at the new interface between layers, which introduces a new internal surface risking delamination or otherwise breaking the multilayer structure).

80. Regarding Wen, the cited paragraph reads as follows:

> The different dental-aligner layers in the multi-layer dental aligner 1700 can also comprise the same material. That is, rather than forming a dental aligner by a thick layer of the same aligner-making material, the aligner is formed by a plurality of thinner layers of aligner-making material using vacuum forming. The thinner layers can be more easily conformed to the physical tooth models than a single thick layer.

EX1008, [0212]. This paragraph describes an entirely different process of aligner formation than Dr. Osswald proposes. In the process Wen describes, "the aligner is formed by a plurality of thinner layers of aligner-making material using vacuum forming." *Id.*

81. The process discussed in the paragraph I reproduced above is like the process described in paragraphs 205-206 of Wen. Those paragraphs describe forming a "first dental aligner layer of a multi-layer dental aligner" by conforming it over a mold, hardening it, then forming a "second dental aligner layer of a multi-layer dental aligner" over the first, already molded layer. EX1008, [0205]-[0206]. This process is shown in Figs. 13-14 of Wen, with Fig. 13 showing the forming of a first layer from a first sheet (1410) over a tooth model and then Fig. 14 showing the forming of a second layer from a second sheet (1510) placed over the first layer already on the tooth model.

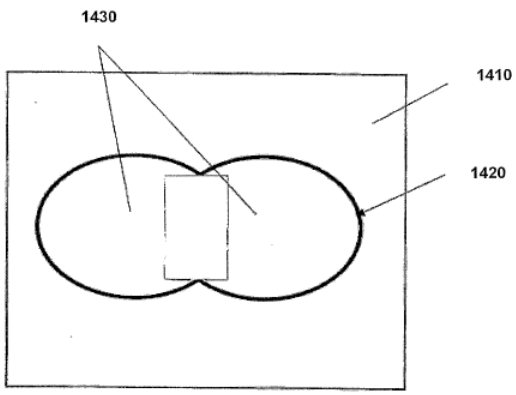

Figure 13

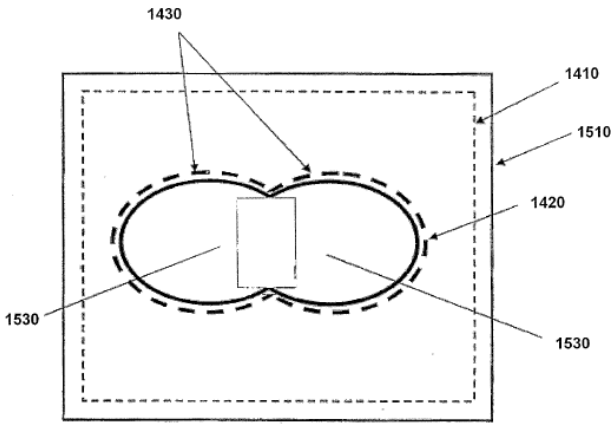

Figure 14

EX1008, Figs. 13-14. In other words, Wen's description of thinner layers conforming to tooth models is not describing the thermoforming of a single multilayer sheet containing thin sublayers over a tooth model. Rather, Wen is describing the forming of an appliance by forming separate thin sheets on a dental model, one atop the other. Consistent with this, I understand that when questioned, Dr. Osswald admitted that paragraph 212 of Wen was similar to the process described in paragraphs 205 and 206, as opposed to forming an appliance by thermoforming a multilayer sheet. EX2017, 27:13-28:8.

82. A POSITA would not have expected to achieve the result Dr. Osswald describes by subdividing layers in a multilayer sheet in this way. Subdividing one layer into two adjacent sublayers with the same total thickness would produce a multilayer sheet composed of the same thicknesses of each type of material, and

the same thickness for the sheet as a whole, so its ability to conform to tooth surfaces would not be expected to improve.

83. Indeed, a POSITA would view the modification as needlessly adding cost and new points of failure. Making a sheet with two layers instead of one increases cost of production, as each layer must be formed separately and then bonded together. Indeed, since Dr. Osswald proposes using adhesive lamination to glue adjacent layers together (*see infra* section XI), this would also add cost for gluing these additional layers together. And the interface between these new sublayers would add a risk of slippage due to shear forces, delamination, and similar types of failure. Put simply, Dr. Osswald's proposal is akin to hoping to achieve improvement in the properties of a piece of plastic by breaking it in half then gluing it back together. A POSITA would expect only harm, not improvement, from doing so.

84. Regarding the second part of Wen Dr. Osswald cites to, that "using thinner layers improves interlayer bonding, particularly between materials with disparate properties," Dr. Osswald cites to EX1008 (Wen) at [00231] and EX1019 (Schrenk) at 155-56 as allegedly supporting this assertion. Again, neither of these cited passages provide such a teaching.

85. Paragraph 231 of Wen reads as follows:

> In addition to aligners having different layers, the aligners described herein may also comprise a single layer that has regions of different material properties. For example, the material (e.g., the polymer) forming an aligner may be treated differently (by heat, light, chemical treatment, etc.). For example, the inner region of the aligner may be heat treated to further polymerize the aligner material, resulting in a harder inner surface. In another variation, the inner surface of the aligner is treated so that it has a surface that is roughened compared to the outer surface.

EX1008, [0231]. This says nothing about interlayer bonding—indeed, this passage describes a *single layer* with varying properties. This passage thus fails to support Dr. Osswald's assertion. I understand that Dr. Osswald, when asked about his citation, conceded that his assertion was not supported by paragraph 231 of Wen, and he further stated that he wasn't sure whether it was supported by paragraph 213. EX2017, 41:18-42:24.

86. On pages 155-56, Schrenk addresses "interlayer interactions" that can alter the properties of a polymeric material near an interface with a different material. These effects span only a short distance; for example, Schrenk describes that in a "microlayer film, with hundreds of very thin layers, interlayer interactions can be anticipated even with very poorly adhering components." EX1019, 155-56. Of course, none of Dr. Osswald's proposals involve microlayers or hundreds of very thin layers; rather, he proposes subdividing a single layer into identical

sublayers on a macro scale, meaning that these sublayers would not produce this effect on each other. Furthermore, Dr. Osswald proposes gluing each adjacent layer together, further diminishing interlayer interactions due to the glue interposed between the layers. Indeed, Dr. Osswald discusses using adhesive lamination to *avoid* altering the properties of the different layers (*see, e.g.*, 613-EX1007, ¶150); the interlayer interactions described by Schrenk would be opposed to this goal. In sum, Schrenk fails to substantiate Dr. Osswald's reasons to subdivide layers in an aligner material.

87. Dr. Osswald also cites to paragraph 213 of Wen as purportedly supporting this improved bonding, but again Wen fails to provide such a teaching. Paragraph 213 of Wen reads as follows:

> Further, a wider array of polymers may be utilized where thinner layers are used to form an appliance. Polymers of disparate properties may delaminate from one another where thicker films are used. Thinner films allow more intimate contact between polymer sheets and therefore help bond the films to one another.

EX1008, [0213]. I understand that Dr. Osswald has stated that he believes paragraph 213 of Wen might not exclusively be referring to Wen's technique of forming aligners by sequentially vacuum forming separate sheets. *See* EX2017, 28:9-29:21 ("I don't think that necessarily applies to only doing it sequentially in thermoforming."). However, this paragraph immediately follows paragraph 212,

which (as I explained above) describes forming aligners by vacuum forming layers one by one over a tooth mold, rather than using a multilayer sheet. Paragraph 213 is likewise describing intimate contact between polymer sheets as they are consecutively molded, one atop the other, upon a tooth mold.

88. The idea behind Wen's description of "more intimate contact" between different sheets can be understood by looking at Wen's figures. I explained the concept with regard to Figs. 13 and 14 above. The manner in which this works can also be visualized by considering the process that would be used to form an aligner by consecutively thermoforming separate sheets over a tooth to make an aligner like the one shown in Fig. 6, below.

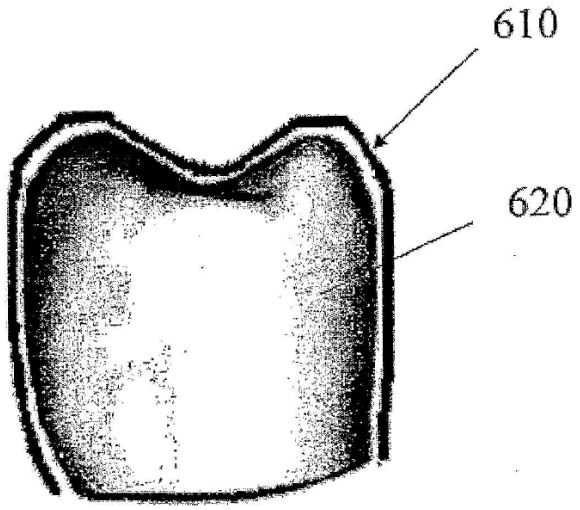

Figure 6

EX1008, Fig. 6. As can be seen in the figure, the surface of the tooth model is irregular, and the surface of the aligner along that surface is also irregular. Wen's description of "more intimate contact" from a thinner sheet is describing that when a second sheet is formed over a first sheet, the second, thin sheet can more easily conform to the irregular surface formed by the first sheet that has already taken on a shape conforming to the tooth model. This is because a thin sheet is easier to deform than a thick sheet. However, if the two layers were formed into a single multilayer sheet to begin with, as Dr. Osswald proposes, then this multilayer sheet would exhibit no such improvement, as its thickness would be the same regardless of whether it was built from thick or thin sublayers.

89. Interpreting Wen's disclosure in the appropriate context, a POSITA would have understood that Wen's discussion of "more intimate contact" refers to the ability of layers to contact each other when formed on each other consecutively over a mold. Indeed, a POSITA would have understood that Wen's idea of "more intimate contact" would not apply to a configuration with flat sheets like that discussed by Dr. Osswald, since each sheet would have the same contact along the interface regardless of its thickness. Indeed, at best, a POSITA would view Dr. Osswald's proposal as introducing additional interfaces, meaning additional points of failure, as well as additional cost as I discussed above. Moreover, since Dr. Osswald also proposes using adhesive lamination, a POSITA would expect the

contact of one layer to be with the glue layer between regular polymer layers, rather than directly between polymer layers. In other words, there would be reduced contact between layers, rather than increased contact.

90. Accordingly, in my opinion, a POSITA would not have viewed Wen as teaching the type of modifications proposed by Dr. Osswald and would not have been motivated to make the changes he proposes based on Wen.

X. ’613 GROUND 3; ’384 GROUND 2; ’090 ALL GROUNDS; AND ’091 ALL GROUNDS – A POSITA WOULD NOT HAVE USED COPOLYESTER BASED ON PORTER

91. Ground 3 for the ’613 patent, ground 2 for the ’384 patent, and all grounds for the ’090 and ’091 patent rely on the Porter reference (Porter & Beavers, “Dishwasher Safe: New Clear Copolyester Is Tougher, More Heat-Resistant, and Processes Easier, Too,” EX1006) to substitute Porter’s Tritan TX1000 copolyester into a dental aligner to replace either a polycarbonate (in Kalili) or a blend of a polycarbonate and a polyester (in Tadros). However, as I explain below, Dr. Osswald has not shown why a POSITA would have turned to Porter’s copolyester for the use he proposes.

92. To begin with, Dr. Osswald has not explained why a POSITA would have turned to the Porter reference to seek a material for a layer of a dental aligner. Porter itself never mentions any orthodontic or dental applications. As I explained above, the plastic described by Porter, Tritan TX1000, is not even a medical-grade

plastic. *See* EX1006, Figs. 1-4 (Tritan TX 1000). As its datasheet indicates, Tritan TX1000 was appropriate for use in appliances, durable consumer goods, and houseware, not medical applications. *See* EX1118, 7-8. Accordingly, a POSITA would not have viewed Porter's Tritan TX1000 material as suitable for use in a medical device like a dental aligner, which is worn in the mouth to adjust teeth and must satisfy safety requirements as a Class II medical device. *See* EX2016, ¶22. Consistent with its lack of applicability in medical devices, Porter's only example products made by Tritan TX1000 are containers with thick plastic walls for holding food and water: CamelBack water bottles, Vita-Mix blenders, and a "thick-walled soup bowl." EX1006, 8-9.

93. Furthermore, each of the products exemplified in Porter is injection-molded, not thermoformed. Porter only briefly mentions that Tritan is capable of being thermoformed when listing multiple types of plastic forming, and it never discusses thermoforming Tritan into any kind of orthodontic, dental, or other medical device. *See* EX1006, 6 ("Thus far, it has been shown to be suitable for injection molding, injection-blow and stretch-blow molding, sheet and flat film extrusion, and thermoforming."), 7 ("It molds well with hot runners and small gates. It also thermoforms well with deep draws."). Moreover, the data sheet for Tritan TX 1000 only mentions molded applications. EX1118, 7

94. Porter also never discusses incorporating Tritan into multilayer sheets. Indeed, Porter never discusses combining Tritan with other polymers at all. At most, Porter mentions in passing that Tritan can be extruded into a sheet or flat film. *See* EX1006, 6, 7.

95. Dr. Osswald fails to show that a POSITA would have looked to Porter to provide a material for a layer in a multilayer dental aligner. As I noted above, the contents of Porter fail to provide any connection to dental aligners or multilayer sheets. Dr. Osswald cites to Porter's discussion of Tritan as one of the many non-BPA containing materials that could be used instead of polycarbonate, but this fails to provide any reason why a POSITA would have looked to Porter instead of to known materials already used in dental aligners. 613-EX1007, ¶145; 384-EX1007, ¶146; 090-EX1007, ¶147; 091-EX1007, ¶146.

96. As I noted above when discussing Tadros, Dr. Osswald's assertion that a POSITA would have avoided polycarbonate due to BPA concerns is not consistent with his argument that "it would have been obvious for a POSITA to use 'exemplary' embodiments such as Samples 4 and 5" from Tadros as a hard layer, since these embodiments are polycarbonate blends. 613-EX1007, ¶169; 384-EX1007, ¶173; *see* EX1003, [0092]-[0093]. It makes no sense for a POSITA to view polycarbonate as harmful to patients, and thus be led to exclude it from an aligner, yet also choose to include polycarbonate as a material in an aligner.

97. Furthermore, even if a POSITA were motivated not to use polycarbonate, that would not mean that the POSITA would be led to look to Porter for its material. After all, Kalili discloses many BPA-free alternatives to polycarbonates in dental aligners, none of which is a co-polyester. *See* EX1005, [0053] (materials include "polyacetates, polyolefins, polyamides, polystyrenes"). Similarly, as I explained above, Tadros discloses numerous categories of non-polycarbonate materials suitable to be mixed in a hard layer, none of which includes Porter's Tritan or even any Tritan copolyester. Dr. Osswald does not explain why a POSITA would have looked to Porter, which no prior art teaches may be used in an orthodontic aligner, instead of the numerous other BPA-free materials expressly disclosed by Kalili and Tadros as suitable for use in aligners.

98. Additionally, Dr. Osswald cites to references teaching numerous known non-copolyester, BPA-free polymers. *See* EX1007, ¶97 (citing EX1106, EX1108, EX1109, EX1110, EX1113). None of these references cited by Dr. Osswald teaches a copolyester. EX1106 discloses a cyclic diol (TMCD), which is not a copolyester. EX1106, [0005]. EX1108 discloses cycloolefin materials that may replace many materials, including polycarbonate, yet these cycloolefins are not copolyesters. EX1108, Abstract, [0003]. EX1109 and EX1110 refer generically to BPA-free plastics, but never mention copolyesters. *See* EX1109, [0017]; EX1110, 6:54-67.

99. Dr. Osswald also asserts that "Rafih [EX1104] would inform a POSITA that Porter's guidance regarding replacing polycarbonate with Tritan applies to dental appliances where Tritan is used in combination with a soft inner layer." 613-EX1007, ¶145; 384-EX1007, ¶146; 090-EX1007, ¶147; 091-EX1007, ¶146. However, Dr. Osswald misinterprets Rafih. Rafih is directed to a type of mouthguard that also keeps the jaws apart, not a dental aligner. *See* EX1104, 4:21-42. I understand that Dr. Osswald admitted when questioned that Rafih's appliance does not provide any tooth-moving forces. EX2017, 96:24-97:2. I agree.

100. While Dr. Osswald implies that Rafih teaches an appliance formed from a multilayer sheet with Tritan acting as a rigid layer combined with a "soft inner layer," this is not true at all. *See also* 613-EX1007, ¶166 ("Rafih discloses using Tritan as a 'BPA-free' <u>rigid layer combined with a soft inner layer</u>"); 384-EX1007, ¶167; 090-EX1007, ¶157; 091-EX1007, ¶158. Rafih does not use a multilayer sheet, or indeed any sheet at all for its appliance. Rafih's appliance is formed from separate plastic pieces, shown most clearly in Fig. 1B below.

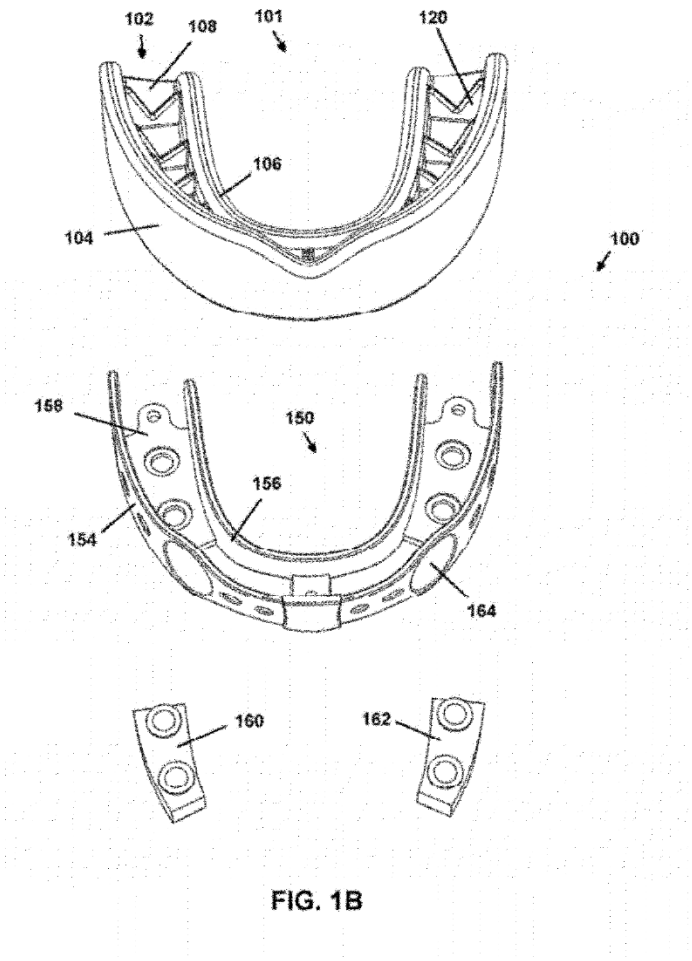

FIG. 1B

EX1104, Fig. 1B. The upper part (channel 102) is made of a soft polymer that the patient can bite into and deform after boiling, so that it takes the shape of the teeth like a dental impression. EX1104, 5:1-6. The middle part (150) is a “frame” that merely reinforces the oral appliance as a whole against undesirable deformation. EX1104, 5:30-64. It is this part that Rafih teaches may be made of Tritan. EX1104, 5:57-64.

101. Neither Rafih’s frame nor Rafih’s channel is a layer of a sheet, much less are they layers of a multilayer sheet. The two components are clearly shown as

separate parts that can be placed together into Rafih's mouthguard apparatus. Thus, Dr. Osswald's characterization of this configuration as one where "Tritan is used in combination with a soft inner layer" is misleading at best.

102. Moreover, from the shape shown in Rafih's figures, it is clear that the frame 150 is not made by thermoforming. Indeed, thermoforming a sheet simply cannot produce a shape like that of the frame 150. Consistent with this, Rafih never says that the frame is thermoformed. Rather, from the shape shown in the figures, a POSITA would have concluded that Rafih's frame was most likely formed by a molding process (e.g., injection molding) that produces a fixed shape independent of the shape of the patient's mouth. This further distinguishes Rafih from dental aligner references like Tadros and Kalili.

103. In sum, given that Rafih does not describe dental aligners or use Tritan to apply tooth-moving forces, does not involve sheets of Tritan or any multilayer sheets, and does not teach thermoforming Tritan, a POSITA would not have viewed Rafih as providing a reason to look to Porter when developing a thermoformed multilayer dental aligner.

104. Dr. Osswald says that Porter describes Tritan as having "chemical resistance when exposed to heat, chemical, and hydrolytic attack, and being less susceptible to environmental stress cracking compared to polycarbonate." 613-EX1007, ¶165; 384-EX1007, ¶166; 090-EX1007, ¶156; 091-EX1007, ¶157.

However, a POSITA would not view Porter's description as providing good reasons to use Tritan in a dental aligner.

105. With regard to the heat, chemical, hydrolytic attack, and stress, Porter expressly describes the resistance to these properties in relation to what "kitchenware is exposed to the dishwasher." EX1006, 6. A POSITA would not view the dishwasher environment for kitchenware as bearing a meaningful relationship to a dental aligner worn in the mouth. Moreover, the objects involved in Porter are thick materials that are exposed to occasional, periodic heat, stress, and detergents in dishwashers. EX1006, 8. By contrast, aligners are made of thin material that is placed under constant stress in a warm, wet environment, including both continuous stress from applying tooth-moving forces as well as the continual forces from biting.

106. Dr. Osswald's discussion of environmental stress cracking also mischaracterizes Porter. Porter refers to improved resistance to environmental stress cracking as arising from the material's "lower residual stress level." EX1006, 6. However, as Porter recognizes, the residual stresses to which he refers arise from the process of injection molding. A POSITA would understand that residual stresses also can be present in thermoformed plastic parts, but the combination of mechanisms in thermoforming are different from those in injection-molding, and the two processes do not generate the same types and

magnitude of internal stresses. Therefore, a POSITA would also understand that Porter's statement that "[p]roducts molded from Tritan have less residual stress" does not necessarily apply to dental aligners that are made by thermoforming sheets, not an injection molding process. Thus, rather than expecting Tritan to exhibit this property in an aligner produced from a thermoformed sheet, a POSITA would have understood that the teaching of Porter on which Dr. Osswald relies is inapplicable to such a process.

107. Indeed, as discussed in section XII.B, when Tritan copolyesters were actually tested as a single-layer appliance for durability in environments simulating intraoral aligner use, it was found not to exhibit improved durability. Align's testing thus confirms that Tritan lacks the durability that Dr. Osswald relies for adopting Porter's Tritan in the first place.

XI. ALL GROUNDS – USE OF ADHESIVE LAMINATION IS NOT JUSTIFIED

A. A POSITA Would Not Have Been Motivated to use Adhesive Lamination in the Combinations Proposed by Dr. Osswald

108. In each ground, Dr. Osswald proposes forming a multilayer sheet by using glue to adhesively laminate each polymer layer of the sheet together. *See, e.g.*, 613-EX1007, ¶¶40, 150, 164, 170 n.5.; 384-EX1007, ¶¶40, 151, 165, 217 n.7; 090-EX1007, ¶¶40, 169, 178, 188 n.5, 193, 237, 241; 091-EX1007, ¶¶40, 156, 170, 181 n.5, 189, 204, 207, 263, 268. He states that he proposes using adhesive lamination to glue layers together because doing so would preserve the materials'

properties, allowing him to argue that his combination satisfies the claim limitations for each patent. *See id.* Indeed, he asserts that using other methods would have changed the properties of each layer in unspecified ways, and he does not attempt to account for this in his analysis, focusing instead exclusively on adhesive lamination. *See id.*; *see also*, 613-EX1007, ¶104 n.2; 384-EX1007, ¶104 n.2; 090-EX1007, ¶104 n.2; 090-EX1007, ¶104 n.2. However, meeting the claim limitations is not a reason for a POSITA to make a combination. Rather than explaining why a POSITA would have selected adhesive lamination to achieve some benefit, Dr. Osswald instead repeatedly states merely that a POSITA would have known of adhesive lamination or would have known that it could be used. This does not show why a POSITA would have done so.

109. To begin with, while Dr. Osswald states that "in certain manufacturing processes (e.g., coextrusion or dual lamination), such that the values reported in a datasheet are not preserved," but "adhesive lamination" would be understood to "preserve the reported properties," he does not actually cite any support for his opinion. 613-EX1007, ¶104 n.2; 384-EX1007, ¶104 n.2; 090-EX1007, ¶104 n.2; 090-EX1007, ¶104 n.2. Dr. Osswald also identifies multiple other manufacturing processes for laminating layers together, including numerous techniques for lamination by varying heat or pressure, including lamination with preheating, simultaneous heating, flame lamination, and lamination with varying

pressure, but does not discuss whether these other processes would be expected to preserve layer properties. 613-EX1007, ¶42; 348-EX1007, ¶42; 090-EX1007, ¶42; 091-EX1007, ¶42.

110. For example, Dr. Osswald asserts that coextrusion "may lead to molecular diffusion or mixing between the layers, as well as cross-linking, that can change the properties of the polymers within a layer," while also asserting the same processes do not occur with adhesive lamination, but he does not cite to anything supporting this assertion. 613-EX1007, ¶31; *see also id.*, ¶35 (asserting without citation that "crosslinking, molecular diffusion, or molecular entanglement, can influence the mechanical properties of both the polymer layers and the overall multilayer polymer sheet"). However, Dr. Osswald cites Ebnesajjad (EX1042) when describing adhesive lamination (*see* 613-EX1007, ¶40), and Ebenesajjad discusses adhesive lamination as including diffusion processes and chemical bonding involving "cross-linking." EX1042, 8, 11-14. Dr. Osswald does not explain why he views these processes would alter properties in the context of coextrusion but not in adhesive lamination.

111. References cited by Dr. Osswald specifically identify aspects such as surface modification and preparation as altering the properties of the polymer materials. *See, e.g.*, EX1042, 72 ("This technique can alter the physical and chemical properties of the surface."); *see also id.*, 59 ("Bulk methods involve

additives, blending, or recrystallization, all of which affect the bulk properties of plastics."); *see also* EX1019, 155-56 (discussing how interlayer interactions affect material properties). For example, Ebnesajjad describes that adhesive lamination can involve harsh surface modification techniques, mechanical blasting and material removal, chemical etching using corrosive chemicals, heat melting, and scorching. *See, e.g.*, EX1042 8-9, 59. Again, Dr. Osswald does not explain why he asserts that coextrusion is prone to alter properties but not adhesive lamination.

112. Furthermore, there are many considerations that would have discouraged a POSITA from using adhesive lamination. To begin with, using adhesive lamination introduces additional cost and complexity into the process for forming a multilayer sheet. Instead of extruding films simultaneously in a process like co-extrusion, adhesive lamination requires forming, cooling, and winding up sheets separately, moving the wound-up rolls to a suitable lamination machine where adhesive can be added to form a new layer in between the two layers, cured and combined with another layer. This process involves additional equipment and costly steps, and it can introduce new points of failure not present when co-extrusion or extrusion lamination using heat and pressure are used. A POSITA would not have incurred these costs and introduced this additional complexity without a good reason to do so, and Dr. Osswald has not explained what this reason would be.

113. Additionally, a POSITA would expect that using adhesive lamination would introduce problems with the functionality and safety of an appliance like a dental aligner. To be worn safely in the mouth, the adhesive would need to be biocompatible, as well as being able to withstand a wet environment and to avoid leeching chemicals into the human body, while at the same time effectively joining together the materials of the different layers (e.g., copolyester and polyurethane elastomer). The adhesive would also need to be thermoformable—in a typical adhesive, like the thermoset adhesives used in orthodontics—the adhesive hardens when set in a way that interferes with thermoforming (e.g., by making a layer that is brittle or otherwise fails when thermoformed). Achieving all of these properties simultaneously would present an engineering challenge that Dr. Osswald has simply ignored.

114. Consistent with my discussion above, Ebnesajjad lists numerous disadvantages to adhesive lamination. EX1042, 9-10. For example, adhesive lamination risks joint failure based on the environment to which the joint is exposed (in this case, the warm, wet environment of the mouth). *Id.* As another example, Ebnesajjad indicates that certain adhesives increase susceptibility to bacteria. *Id.* Another concern highlighted by Ebnesajjad is that using adhesive lamination risks exposure to solvents that can present health problems. *Id.* These concerns among others would weigh against use of adhesive lamination in an

orthodontic aligner, yet Dr. Osswald does not address them, much less point to advantages of adhesive lamination that would outweigh them.

115. Dr. Osswald's proposal to introduce adhesive layers is also inconsistent with his statement that a POSITA would have viewed the introduction of new materials or layers to have had unpredictable effects on the ability to deliver tooth-moving forces. *See, e.g.*, 613-EX1007, ¶145. Introducing adhesives would have added further layers of new polymeric material, yet Dr. Osswald has not explained how a POSITA would have dealt with the unpredictability he says that introducing new layers of materials would have produced.

116. The process of adhering layers together with glue would also risk forming "bubbles" between the joined layers where the two layers failed to adhere to each other (e.g., because of surface irregularities, uneven application of adhesive, gas generation, or distortion of layers prior to the end of the curing process). Bubbles of this kind would lead not only to increased danger of delamination and reduced resistance to shear forces (as the layers would locally fail to adhere to each other), but it would also risk producing a sheet of varying thickness that could complicate the ability of the sheet to closely match tooth structures via thermoforming.

117. I understand from the Chen declaration that adhesive lamination was viewed as inappropriate for use in aligners based on Align's cumulative experience

in aligner design, and that consequently Align does not use adhesive lamination in its aligners. EX2016, ¶¶40-42. Consistent with Align's conclusions, it is my opinion that Dr. Osswald has not shown that a POSITA would have had a good reason to use adhesive lamination in making multilayer aligners.

B. The Proposed Use of Adhesive Lamination is Incompatible with Claims 12-15 of the '613 Patent

118. Dr. Osswald's proposed use of adhesive lamination is inconsistent with claims 12-15, as his proposed combination fails to satisfy the claims as written.

119. Claim 14 of the '613 patent depends on claim 13, which depends on claim 12, which in turn depends on claim 1. Claims 12-14 recite as follows:

> 12. The method of claim 1, wherein the three or more polymer layers each comprise:
>
> > co-polyester material having a flexural modulus greater than about 150,000 psi; or
> >
> > thermoplastic polyurethane elastomer material having an elongation at break of greater than about 200% and a hardness from about 60 A to about 85 D.
>
> 13. The method of claim 12, wherein the three or more polymer layers alternate between soft and hard polymer layers.
>
> 14. The method of claim 13, wherein the sheet has three polymer layers.
>
> 15. The method of claim 12, wherein the hard polymer layer is positioned adjacent to one or more soft polymer layers, the one or more soft polymer layers comprising the soft polymer layer.

120. In other words, claim 12 requires that every one of the three or more polymer layers of the multilayer sheet comprise either co-polyester material or thermoplastic polyurethane elastomer material, with the recited properties. Claim 13 requires the layers alternate in materials. Claim 14 limits the sheet from one with "three or more layers" to one with just "three polymer layers." Claim 15 requires that the hard polymer layer be adjacent to the soft polymer layer recited in claim 1.

121. Each of these claims is inconsistent with Dr. Osswald's proposed use of adhesive lamination. As I noted above, in the adhesive lamination Dr. Osswald relies on (*see* 613-EX1007, ¶¶150, 164), a layer of polymeric glue is interposed between each other layer of a multilayer material. *See, e.g.*, 613-EX1007, ¶41 (identifying "suitable adhesives for polyurethanes and polyesters" as given by EX1042 at 254); EX1042, 254 (listing polymers "neoprene or nitrile-phenolic elastomer, epoxy, epoxy-polyamide, epoxy-phenolic, phenolic, polyester, modified acrylic, cyanoacrylates, phenolic-polyvinyl butyral, polyurethane, butyl rubber, polyisobutylene, and PMMA" for polyesters and polymers including elastomeric adhesives and "epoxies, modified epoxies, polyamide-epoxy, neoprene, and resorcinol-formaldehyde" for polyurethane); EX1019, 150 (describing "glue-layer polymers"). Examples of what a such adhesive layers look like are shown in Fig.

21 of Schrenk. I have reproduced a representative illustration from Schrenk Fig. 21 below.

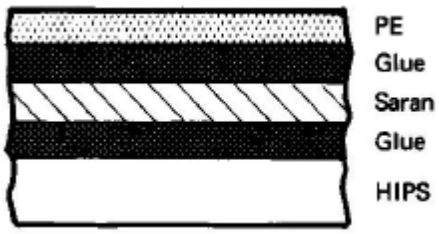

EX1019, Fig. 21

122. Thus, while Dr. Osswald provides an illustration of three polymer layers in grounds 1 and 3 for the ’613 patent (*see* 613-EX1007, ¶¶171, 219), the actual structure he proposes has five polymeric layers: the hard and soft layers he discusses as well as the glue layers he proposes to insert between them. For example, the structure shown in ¶171 is actually soft-glue-hard-glue-soft, and the structure shown in ¶219 is actually hard-glue-hard-glue-soft. For example, the following graphic modifies Dr. Osswald’s illustration to show the actual structure he proposes in ground 1 of the ’613 patent:

123. This fails to meet the limitations of claims 12-15. Claim 12 requires that *each* polymer layer be co-polyester or thermoplastic polyurethane and have the

recited properties, but Dr. Osswald has not shown this to be the case for the glue layers. Claim 13 requires alternating hard and soft layers, but Dr. Osswald's proposal injects glue layers between hard and soft layers. Claim 14 requires that the number of layers in the polymeric sheet be three, yet Dr. Osswald's proposal has a five-layer sheet. And claim 15 requires the hard polymer layer to be adjacent to the soft polymer layer, yet Dr. Osswald's proposal has it adjacent to a glue layer instead. For each of these claims, Dr. Osswald has not shown them to be satisfied when adhesive lamination is used as he proposes, so he has not shown any of claims 12-15 of the '613 patent to be obvious.

XII. SECONDARY INDICIA SUPPORT THE PATENTABILITY OF THE MULTILAYER APPLIANCE PATENTS' CLAIMS

124. As I explain below, secondary indicia confirm that the claims of the multilayer appliance patents were nonobvious.

A. The Multilayer Appliance Patents' Claims Encompass SmartTrack (ST30) Aligners

125. I understand from the Chen declaration (EX2016) that Align's clear plastic aligner products are formed from a material referred to as SmartTrack, or ST30. As I explain below, ST30 embodies the claims of each of the multilayer appliance patents.

126. ST30 is a multilayer polymeric material that is formed of a sheet comprising multiple layers of soft and hard materials. EX2016, ¶14. An ST30

aligner is manufactured from ST30 to be worn on a patient's teeth, and when worn, the aligner applies forces to move the patient's teeth from a first configuration to a second configuration, thereby positioning the patient's teeth. The specific arrangement of layers used in ST30 aligners is a three-layer configuration, with a hard layer formed of a hard co-polyester material disposed between two soft layers formed of a soft thermoplastic polyurethane elastomer material. EX2016, ¶¶14-15. The material properties of ST30 are described in detail in the Chen declaration. EX2016, ¶¶14-20.

127. As illustrated in the charts below, ST30 aligners embody the independent claims of the multilayer appliance patents.

1. The '613 Patent

128. In my opinion, and as shown in the chart below, at least the '613 patent's independent claims are embodied by the method of making ST30 aligners.

'613 Patent Claims	**ST30 Aligners**
1. A method of making a dental appliance for positioning a patient's teeth, the method comprising:	ST30 aligners are dental appliances manufactured for positioning a patient's teeth. EX2016, ¶15.
providing a sheet comprising three or more polymer layers, the three or more polymer layers comprising:	ST30 aligners are made using a sheet that comprises three polymer layers. EX2016, ¶15.

’613 Patent Claims	ST30 Aligners
a hard polymer layer comprising a co-polyester and having a flexural modulus greater than about 150,000 psi; and	The three polymer layers of the sheet used to make an ST30 aligner include a hard polymer layer comprising a co-polyester and having a flexural modulus greater than about 150,000 psi. EX2016, ¶16.
a soft polymer layer comprising a thermoplastic polyurethane elastomer and having an elongation at break of greater than about 200%, and a hardness from about 60 A to about 85 D;	The three polymer layers of the sheet used to make an ST30 aligner include a soft polymer layer comprising a thermoplastic polyurethane elastomer and having an elongation at break of greater than about 200%, and a hardness from about 60 A to about 85 D. EX2016, ¶17.
providing a positive model of the patient’s teeth in a target position; and	The thermoforming process for making an ST30 aligner includes providing a positive model of the patient’s teeth in a target position. EX2016, ¶18.
fabricating an appliance as a negative of the positive model comprising thermoforming the sheet over the positive model.	ST30 aligners are appliances that are fabricated as a negative of the positive model, by thermoforming the sheet over the positive model. EX2016, ¶18.
20. A method of making a plurality of dental appliances for positioning a patient’s teeth, the method comprising:	ST30 aligners are dental appliances manufactured for positioning a patient’s teeth. EX2016, ¶15. Typically, a plurality of these appliances is made for a patient. EX2016, ¶20.

’613 Patent Claims	ST30 Aligners
providing a sheet comprising three or more polymer layers, the three or more polymer layers comprising:	ST30 aligners are made using a sheet that comprises three polymer layers. EX2016, ¶15.
a hard polymer layer comprising a co-polyester and having a flexural modulus greater than about 150,000 psi; and	The three polymer layers of the sheet used to make an ST30 aligner include a hard polymer layer comprising a co-polyester and having a flexural modulus greater than about 150,000 psi. EX2016, ¶16.
a soft polymer layer comprising a thermoplastic polyurethane elastomer and having an elongation at break of greater than about 200%, and a hardness from about 60 A to about 85 D;	The three polymer layers of the sheet used to make an ST30 aligner include a soft polymer layer comprising a thermoplastic polyurethane elastomer and having an elongation at break of greater than about 200%, and a hardness from about 60 A to about 85 D. EX2016, ¶17.
providing a plurality of positive models of the patient’s teeth, each in a target position; and	The thermoforming process for making an ST30 aligner includes providing a positive model of the patient’s teeth in a target position. EX2016, ¶18. To make multiple aligners, multiple such models are made, corresponding to successive stages of movement. EX2016, ¶20.
fabricating the plurality of dental appliances, each as a negative of at least one of the plurality of positive models comprising	ST30 aligners are appliances that are fabricated as a negative of the positive model, by thermoforming the sheet over the positive model. EX2016, ¶18. When making multiple aligners, each aligner is made by this thermoforming process as a negative of one of the

’613 Patent Claims	ST30 Aligners
thermoforming the sheet over the at least one positive model.	plurality of positive models corresponding to a stage of movement. EX2016, ¶20.

129. In addition to the independent claims, the method of making ST30 aligners is also embodied by dependent claims of the ’613 patent. For example, as I explain below, the method of making ST30 aligners corresponds to the elements recited in dependent claims 12, 13, and 14 of the ’613 patent.

130. Claim 12 depends from claim 1, and recites:

> The method of claim 1, wherein the three or more polymer layers each comprise:
>
> co-polyester material having a flexural modulus greater than about 150,000 psi; or
>
> thermoplastic polyurethane elastomer material having an elongation at break of greater than about 200% and a hardness from about 60 A to about 85 D.

131. Claim 1 is embodied by the method of making ST30 aligners, as I explained above. Additionally, each of the layers of the sheet of ST30 material used to make an ST30 aligner comprises (1) co-polyester material having a flexural modulus greater than about 150,000 psi; or (2) thermoplastic polyurethane elastomer material having an elongation at break of greater than about 200% and a hardness from about 60 A to about 85 D. EX2016, ¶¶16-17. Accordingly, claim 12is also embodied by the method of making ST30 aligners.

132. Claim 13 depends from claim 12, and recites:

The method of claim 12, wherein the three or more polymer layers alternate between soft and hard polymer layers.

133. Claim 12 is embodied by the method of making ST30 aligners, as I explained above. Additionally, the layers of the sheet of ST30 material used to make an ST30 aligner alternates between soft and hard layers. EX2016, ¶15. Accordingly, claim 13 is also embodied by the method of making ST30 aligners.

134. Claim 14 depends from claim 13, and recites:

The method of claim 13, wherein the sheet has three polymer layers.

135. Claim 13 is embodied by the method of making ST30 aligners, as I explained above. Additionally, the number of layers in the sheet of ST30 material used to make an ST30 aligner is exactly three. EX2016, ¶15. Accordingly, claim 14 is also embodied by the method of making ST30 aligners.

2. The ’384 Patent

136. In my opinion, and as shown in the chart below, at least the ’384 patent’s independent claims are embodied by ST30 aligners.

’384 Patent Claims	ST30 Aligners
1. A dental appliance for positioning a patient’s teeth from a first arrangement toward a second arrangement, the dental appliance comprising:	ST30 aligners are dental appliances for positioning a patient’s teeth from a first arrangement toward a second arrangement. EX2016, ¶15.

’384 Patent Claims	ST30 Aligners
a plurality of tooth-receiving cavities shaped to receive and resiliently reposition the patient’s teeth from the first arrangement toward the second arrangement;	ST30 aligners have multiple tooth-receiving cavities shaped to receive and resiliently reposition the patient’s teeth from the first arrangement toward the second arrangement. EX2016, ¶18.
three or more polymer layers, the three or more polymer layers comprising:	ST30 aligners have three polymer layers. EX2016, ¶15.
a hard polymer layer comprising a co-polyester and having a flexural modulus greater than about 150,000 psi; and	The three polymer layers of an ST30 aligner include a hard polymer layer comprising a co-polyester and having a flexural modulus greater than about 150,000 psi. EX2016, ¶16.
a soft polymer layer comprising a thermoplastic polyurethane elastomer and having an elongation at break of greater than about 200%, and a hardness from about 60 A to about 85 D.	The three polymer layers of an ST30 aligner include a soft polymer layer comprising a thermoplastic polyurethane elastomer and having an elongation at break of greater than about 200%, and a hardness from about 60 A to about 85 D. EX2016, ¶17.
11. A plurality of dental appliances for positioning a patient’s teeth,	ST30 aligners are dental appliances for positioning a patient’s teeth from a first arrangement toward a second arrangement. EX2016, ¶15. Typically, a plurality of these appliances is made for a patient. EX2016, ¶20.

’384 Patent Claims	ST30 Aligners
having a plurality of tooth-receiving cavities shaped to directly receive at least some of the patient’s teeth and apply a resilient positioning force to the patient’s teeth,	ST30 aligners have multiple tooth-receiving cavities shaped to receive and resiliently reposition the patient’s teeth from the first arrangement toward the second arrangement by applying a resilient positioning force to the teeth. EX2016, ¶18.
wherein the plurality of dental appliances are shaped to move teeth from one arrangement to a successive arrangement, and wherein at least at one of the plurality of dental appliances comprises:	ST30 aligners are typically made as a set of aligners, each made to move a patient’s teeth from one arrangement to a successive arrangement. EX2016, ¶20.
three or more polymer layers, the three or more polymer layers comprising:	ST30 aligners have three polymer layers. EX2016, ¶15.
a hard polymer layer comprising a co-polyester and having a flexural modulus greater than about 150,000 psi; and	The three polymer layers of an ST30 aligner include a hard polymer layer comprising a co-polyester and having a flexural modulus greater than about 150,000 psi. EX2016, ¶16.
a soft polymer layer comprising a thermoplastic polyurethane elastomer and having an elongation at break of	The three polymer layers of an ST30 aligner include a soft polymer layer comprising a thermoplastic polyurethane elastomer and having an elongation at break of greater than about 200%, and a hardness from about 60 A to about 85 D. EX2016, ¶17.

’384 Patent Claims	ST30 Aligners
greater than about 200%, and a hardness from about 60 A to about 85 D.	
21. A plurality of dental appliances for positioning a patient’s teeth, the plurality of dental appliances comprising:	ST30 aligners are dental appliances for positioning a patient’s teeth from a first arrangement toward a second arrangement. EX2016, ¶15. Typically, a plurality of these appliances is made for a patient. EX2016, ¶20.
a first dental appliance comprising:	The plurality of ST30 dental aligners include a first dental appliance and a second dental appliance. *See* EX2016, ¶20.
a first plurality of tooth-receiving cavities shaped to receive and resiliently reposition the patient’s teeth from a first arrangement toward a second arrangement;	Each ST30 aligner has multiple tooth-receiving cavities shaped to receive and resiliently reposition the patient’s teeth from the first arrangement toward the second arrangement. EX2016, ¶18.
first three or more polymer layers, the first three or more polymer layers comprising:	Each ST30 aligner has three polymer layers. EX2016, ¶15.
a first hard polymer layer comprising a co-polyester and having a flexural modulus greater than about 150,000 psi; and	The three polymer layers of an ST30 aligner include a hard polymer layer comprising a co-polyester and having a flexural modulus greater than about 150,000 psi. EX2016, ¶16.

’384 Patent Claims	ST30 Aligners
a first soft polymer layer comprising a thermoplastic polyurethane elastomer and having an elongation at break of greater than about 200%, and a hardness from about 60 A to about 85 D; and	The three polymer layers of an ST30 aligner include a soft polymer layer comprising a thermoplastic polyurethane elastomer and having an elongation at break of greater than about 200%, and a hardness from about 60 A to about 85 D. EX2016, ¶17.
a second dental appliance comprising:	The plurality of ST30 dental aligners include a first dental appliance and a second dental appliance. EX2016, ¶20.
a second plurality of tooth-receiving cavities shaped to receive and resiliently reposition the patient’s teeth from the second arrangement toward a third arrangement;	Each ST30 aligner has multiple tooth-receiving cavities shaped to receive and resiliently reposition the patient’s teeth from the second arrangement toward the third arrangement. EX2016, ¶20.
second three or more polymer layers, the second three or more polymer layers comprising:	Each ST30 aligner has three polymer layers. EX2016, ¶15.
a second hard polymer layer comprising a co-polyester and having a flexural modulus greater than about 150,000 psi; and	The three polymer layers of an ST30 aligner include a hard polymer layer comprising a co-polyester and having a flexural modulus greater than about 150,000 psi. EX2016, ¶16.

’384 Patent Claims	ST30 Aligners
a second soft polymer layer comprising a thermoplastic polyurethane elastomer and having an elongation at break of greater than about 200%, and a hardness from about 60 A to about 85 D.	The three polymer layers of an ST30 aligner include a soft polymer layer comprising a thermoplastic polyurethane elastomer and having an elongation at break of greater than about 200%, and a hardness from about 60 A to about 85 D. EX2016, ¶17.

3. The ’090 Patent

137. In my opinion, and as shown in the chart below, at least independent claim 1 of the ’090 patent, the sole independent claim of that patent, is embodied by the method of making ST30 aligners.

’090 Patent Claims	ST30 Aligners
1. A method of making a multilayer dental aligner for repositioning a patient’s teeth from a first arrangement toward a second arrangement, the method comprising:	ST30 aligners are multilayer dental aligners made for positioning a patient’s teeth from a first arrangement toward a second arrangement. EX2016, ¶15.
providing a multilayer sheet comprising three polymer layers, the three polymer layers comprising:	ST30 aligners are made using a multilayer sheet that comprises three polymer layers. EX2016, ¶15.

’090 Patent Claims	ST30 Aligners
a first layer consisting of a co-polyester, the co-polyester having a flexural modulus greater than 150,000 psi, an elongation at yield of greater than 4%, a tensile modulus greater than 150,000 psi, a tensile strength at yield of 4000-6500 psi, and an elongation at break of greater than 70%; and	The three polymer layers of the sheet used to make an ST30 aligner include a first layer that consists of a co-polyester having a flexural modulus greater than 150,000 psi, an elongation at yield of greater than 4%, a tensile modulus greater than 150,000 psi, a tensile strength at yield of 4000-6500 psi, and an elongation at break of greater than 70%. EX2016, ¶16.
a second layer consisting of a thermoplastic polyurethane elastomer, the thermoplastic polyurethane elastomer having an ultimate tensile strength of greater than 5000 psi, an elongation at break of greater than 200%, and a hardness of 60A to 85D; and	The three polymer layers of the sheet used to make an ST30 aligner include a second layer that consists of a thermoplastic polyurethane elastomer having an ultimate tensile strength of greater than 5000 psi, an elongation at break of greater than 200%, and a hardness of 60A to 85D. EX2016, ¶17.
a third layer;	The three polymer layers of the sheet used to make an ST30 aligner include a third layer. EX2016, ¶15.
wherein the co-polyester has an elastic modulus greater than the thermoplastic	The co-polyester of the first layer has an elastic modulus greater than the thermoplastic polyurethane elastomer of the second layer. EX2016, ¶15.

’090 Patent Claims	ST30 Aligners
polyurethane elastomer;	
providing a mold;	The thermoforming process for making an ST30 aligner includes providing a mold in the form of a model of the patient’s teeth. EX2016, ¶18.
thermoforming the multilayer sheet over the mold to form a plurality of tooth-receiving cavities configured to receive and reposition the patient’s teeth from the first arrangement toward the second arrangement; and	ST30 aligners are fabricated by thermoforming the multilayer sheet over the mold. EX2016, ¶18. An ST30 aligner formed in this way has multiple tooth-receiving cavities shaped to receive and reposition the patient’s teeth from the first arrangement toward the second arrangement. EX2016, ¶18.
trimming excess material from the thermoformed multilayer sheet to form the multilayer dental aligner.	After thermoforming, excess material is trimmed from the thermoformed multilayer sheet to produce the multilayer ST30 dental aligner. EX2016, ¶19.

4. The ’091 Patent

138. In my opinion, and as shown in the chart below, at least the ’091 patent’s independent claims are embodied by ST30 aligners, which are made from multilayer sheets.

’090 Patent Claims	ST30 Aligners
1. A multilayer sheet comprising:	ST30 aligners are made from a multilayer sheet of ST30 material. EX2016, ¶15.
a first layer containing a single polymer, wherein the single polymer of the first layer is a co-polyester, and wherein the first layer has a flexural modulus greater than 150,000 psi, an elongation at yield of greater than 4%, a tensile modulus greater than 150,000 psi, a tensile strength at yield of 4000-6500 psi, and an elongation at break of greater than 70%; and	The multilayer sheet includes a first layer that contains a single polymer: a co-polyester. EX2016, ¶16. That layer has a flexural modulus greater than 150,000 psi, an elongation at yield of greater than 4%, a tensile modulus greater than 150,000 psi, a tensile strength at yield of 4000-6500 psi, and an elongation at break of greater than 70%. EX2016, ¶16.
a second layer containing a single polymer, wherein the single polymer of the second layer is a thermoplastic polyurethane elastomer, and wherein the second layer has an ultimate tensile strength of greater than 5000 psi, an elongation at break of greater than 200%, and a hardness of 60A to 85D; and	The multilayer sheet includes a second layer that contains a single polymer: a thermoplastic polyurethane elastomer. EX2016, ¶17. That layer has an ultimate tensile strength of greater than 5000 psi, an elongation at break of greater than 200%, and a hardness of 60A to 85D. EX2016, ¶17.

’090 Patent Claims	ST30 Aligners
a third layer;	The multilayer sheet includes a third layer. EX2016, ¶15.
wherein the first layer has an elastic modulus greater than the second layer; and	The elastic modulus of the first layer is greater than the elastic modulus of the second layer. EX2016, ¶15.
wherein the multilayer sheet is incorporated into an orthodontic appliance.	In an ST30 aligner, a sheet of ST30 material is incorporated into the aligner (an orthodontic appliance) by thermoforming the sheet into the shape of the aligner. EX2016, ¶18.
6. A multilayer dental aligner for repositioning a patient’s teeth from a first arrangement toward a second arrangement, the multilayer dental aligner comprising:	ST30 aligners are multilayer dental aligners made for positioning a patient’s teeth from a first arrangement toward a second arrangement. EX2016, ¶15.
a multilayer sheet comprising:	ST30 aligners are made from a multilayer sheet of ST30 material. EX2016, ¶15.
a first layer containing a single polymer, wherein the single polymer of the first layer is a co-polyester, and wherein the first layer has a flexural modulus greater than 150,000 psi, an elongation at yield of greater than 4%, a tensile modulus greater	The multilayer sheet includes a first layer that contains a single polymer: a co-polyester. EX2016, ¶16. That layer has a flexural modulus greater than 150,000 psi, an elongation at yield of greater than 4%, a tensile modulus greater than 150,000 psi, a tensile strength at yield of 4000-6500 psi, and an elongation at break of greater than 70%. EX2016, ¶16.

’090 Patent Claims	ST30 Aligners
than 150,000 psi, a tensile strength at yield of 4000-6500 psi, and an elongation at break of greater than 70%; and	
a second layer containing a single polymer, wherein the single polymer of the second layer is a thermoplastic polyurethane elastomer, and wherein the second layer has an ultimate tensile strength of greater than 5000 psi, an elongation at break of greater than 200%, and a hardness of 60A to 85D; and	The multilayer sheet includes a second layer that contains a single polymer: a thermoplastic polyurethane elastomer. EX2016, ¶17. That layer has an ultimate tensile strength of greater than 5000 psi, an elongation at break of greater than 200%, and a hardness of 60A to 85D. EX2016, ¶17.
wherein the multilayer sheet forms a plurality of tooth-receiving cavities configured to receive and reposition the patient’s teeth from the first arrangement toward the second arrangement.	In an ST30 aligner, a sheet of ST30 material is formed into an orthodontic aligner by thermoforming the sheet into the shape of the aligner. EX2016, ¶18. The aligner has multiple tooth-receiving cavities shaped to receive and reposition the patient’s teeth from the first arrangement toward the second arrangement. EX2016, ¶18.
10. A multilayer dental aligner for repositioning a patient’s teeth from a first arrangement toward a second	ST30 aligners are multilayer dental aligners made for positioning a patient’s teeth from a first arrangement toward a second arrangement. EX2016, ¶15.

’090 Patent Claims	ST30 Aligners
arrangement, the multilayer dental aligner comprising:	
a multilayer sheet comprising:	ST30 aligners are made from a multilayer sheet of ST30 material. EX2016, ¶15.
a first layer consisting of a co-polyester, the co-polyester having a flexural modulus of greater than 150,000 psi, an elongation at yield of greater than 4%, a tensile modulus greater than 150,000 psi, a tensile strength at yield of 4000-6500 psi, and an elongation at break of greater than 70%;	The multilayer sheet includes a first layer that consists of a co-polyester. EX2016, ¶16. That co-polyester has a flexural modulus greater than 150,000 psi, an elongation at yield of greater than 4%, a tensile modulus greater than 150,000 psi, a tensile strength at yield of 4000-6500 psi, and an elongation at break of greater than 70%. EX2016, ¶16.
a second layer consisting of a thermoplastic polyurethane elastomer, the thermoplastic polyurethane elastomer having an ultimate tensile strength of greater than 5000 psi, an elongation at break of greater than 200%, and a hardness of 60A to 85D;	The multilayer sheet includes a second layer that consists of a thermoplastic polyurethane elastomer. EX2016, ¶17. That thermoplastic polyurethane elastomer has an ultimate tensile strength of greater than 5000 psi, an elongation at break of greater than 200%, and a hardness of 60A to 85D. EX2016, ¶17.
a third layer; and	The multilayer sheet includes a third layer. EX2016, ¶15.

’090 Patent Claims	ST30 Aligners
wherein the multilayer sheet forms a plurality of tooth-receiving cavities configured to receive and reposition the patient’s teeth from the first arrangement toward the second arrangement.	In an ST30 aligner, a sheet of ST30 material is formed into an orthodontic aligner by thermoforming the sheet into the shape of the aligner. EX2016, ¶18. The aligner has multiple tooth-receiving cavities shaped to receive and reposition the patient’s teeth from the first arrangement toward the second arrangement. EX2016, ¶18.
18. A multilayer dental aligner for repositioning a patient’s teeth from a first arrangement toward a second arrangement, the multilayer dental aligner comprising:	ST30 aligners are multilayer dental aligners made for positioning a patient’s teeth from a first arrangement toward a second arrangement. EX2016, ¶15.
a multilayer sheet comprising:	ST30 aligners are made from a multilayer sheet of ST30 material. EX2016, ¶15.
a first layer consisting of a co-polyester, the co-polyester having an elongation at break of greater than 70%, a flexural modulus of greater than 150,000 psi, an elongation at yield of greater than 4%, a tensile modulus greater than 150,000 psi, and a tensile strength at yield of 4000-6500 psi; and	The multilayer sheet includes a first layer that consists of a co-polyester. EX2016, ¶16. That co-polyester has a flexural modulus greater than 150,000 psi, an elongation at yield of greater than 4%, a tensile modulus greater than 150,000 psi, a tensile strength at yield of 4000-6500 psi, and an elongation at break of greater than 70%. EX2016, ¶16.

’090 Patent Claims	ST30 Aligners
a second layer consisting of a thermoplastic polyurethane elastomer having an elongation at break of greater than 200%, an ultimate tensile strength of greater than 5000 psi, and a hardness of 60A to 85D; and	The multilayer sheet includes a second layer that consists of a thermoplastic polyurethane elastomer. EX2016, ¶17. That thermoplastic polyurethane elastomer has an ultimate tensile strength of greater than 5000 psi, an elongation at break of greater than 200%, and a hardness of 60A to 85D. EX2016, ¶17.
wherein the multilayer sheet forms a plurality of tooth-receiving cavities configured to receive and reposition the patient’s teeth from the first arrangement toward the second arrangement.	In an ST30 aligner, a sheet of ST30 material is formed into an orthodontic aligner by thermoforming the sheet into the shape of the aligner. EX2016, ¶18. The aligner has multiple tooth-receiving cavities shaped to receive and reposition the patient’s teeth from the first arrangement toward the second arrangement. EX2016, ¶18.

B. Align’s Testing Demonstrates Superiority of ST30 Aligners

139. I understand from the declaration of Yan Chen that over a period of seven years leading up to the critical date for the multilayer appliance patents, Align conducted testing of many different materials as candidate aligner materials to replace its then-existing single-layer, thermoplastic polyurethane appliance product, made from a material called Exceed-30 or “EX30.” EX2016, ¶¶5-10, 21. At the time, EX30 was the material Align used to make its commercial aligners,

which were the dominant clear plastic orthodontic aligners on the market. EX2016, ¶¶21, 27.

140. During this process, I understand that Align worked to develop an orthodontic aligner meeting necessary criteria for effective orthodontic treatment, including improved performance relative to aligners made of the EX30 material. EX2016, ¶22. These criteria included modulus of elasticity, elongation, polymer thermal-mechanical properties, stress-relaxation, durability, environmental stress cracking, transparency, thermoforming adaptation, and aligner thermoformability. EX2016, ¶22. For example, Align sought an aligner material showing improvement in stress-relaxation relative to EX30. EX2016, ¶23. For each of these criteria, the candidate materials were tested and compared to the properties of EX30 as well as each other, with this comparison being used to identify superior materials based on their overall properties. EX2016, ¶24. At least 269 materials were tested during this process. EX2016, ¶¶12-13, 22.

141. I understand that this testing process led to the identification of ST30 as the top candidate material for commercialization, with ST30 showing excellent performance, including similar or superior properties to EX30, and meeting Align's design goals. EX2016, ¶¶23-24.

142. In each ground, Dr. Osswald also relies on art teaching the use of polycarbonate in aligners, including Tadros and Kalili. As the Chen declaration

describes, Align tested multiple polycarbonate samples, but these repeatedly underperformed in terms of durability among other properties. As such, it was determined that ST30 was substantially superior to polycarbonate as an aligner material. EX2016, ¶24.

143. In some grounds, Dr. Osswald relies on Porter's disclosure of Tritan copolyester, proposing to substitute it for polycarbonate as a hard layer. *See supra* section X. Dr. Osswald further opined a POSITA would not have expected soft material to provide durability in an aligner, and expressly stated that a POSITA "would have expected Tritan to be durable enough, and superior to polycarbonate, to withstand intraoral conditions." *See, e.g.*, 613-EX1007, ¶¶47, 165; *see also id.*, ¶¶104-05 (noting only slight differences among different Tritan copolyesters). However, as the Chen declaration explains, Tritan aligners were also tested by Align, yet in intraoral conditions ST30 showed substantial superiority in durability compared to Tritan aligners. *See* EX2016, ¶24.

C. Orthodontic Appliances Made According to the Multilayer Appliance Patents Show Unexpectedly Superior Properties

144. As the Chen declaration describes, despite the low durability of Tritan in intraoral conditions, it was surprisingly found that forming a multilayer sheet including both a Tritan co-polyester and a soft thermoplastic polyurethane elastomer (as found in ST30) resulted in significantly improved properties relative to EX30. EX2016, ¶¶23, 25. For example, ST30 met Align's goals of showing

superior properties for delivery of tooth-moving forces, including stress-relaxation that showed greater than 50% improvement in retained force over time compared to EX30, as well as superior durability relative to EX30. *Id.*

145. As the Chen declaration describes, Align conducted a clinical study comparing the performance of aligners made of ST30 to those made of EX30, which was the dominant clear plastic aligner on the market at the time. EX2016, ¶¶26-27. The details of this study were also disclosed to the Patent Office during prosecution. *See* EX1010, 1239-42.

146. In the study, patients were divided into two groups: an experimental group that received ST30 appliances and a control group that received EX30 appliances. EX2016, ¶28. The experimental group was a set of 1,015 new patients for participating doctors over a one-month period, and the control group consisted of the patients for those doctors over the prior six months. *Id.* The patients in each group were tracked over a five-month period during which they wore their assigned aligners, which were made to produce target movements of teeth. *Id.* These patients were classified into categories of "On-Track" (measured tooth movement matched target tooth movement within predetermined variance), "Off-Track" (measured tooth movement fell outside allowable variance relative to target tooth movement), and "Cannot Match" (measured tooth movement fell far outside allowable variance relative to target tooth movement). *Id.*

147. Patients were assessed during the study using dental impressions to compare actual tooth movements to target tooth movements. EX2016, ¶29. The patients treated with ST30 aligners showed significantly superior outcomes to those treated with EX30 aligners, including a strongly significant increase in On-Track performance (a 26% improvement, $p < 0.001$), as well as strongly significant decreases in Off-Track (-17%, $p < 0.001$) and Cannot Match (-34%, $p < 0.001$) performance in patients treated with ST30 aligners compared to those treated with EX30 aligners. EX2016, ¶29.

148. As the Chen declaration describes, the improved performance of ST30 was a surprising and unexpected result, and it led to Align's prompt replacement of EX30 with ST30 as the material used to manufacture aligners, such that since 2013, nearly all clear plastic aligners sold by Align are made of ST30. EX2016, ¶30. Since its introduction, ST30 has been Align's top-performing material and a market-leading material for clear plastic orthodontic aligners. EX2016, ¶30.

149. The significant improvements of ST30 aligners relative to the prior state-of-the-art EX30 aligners were also confirmed by a large retrospective analysis comparing patients treated with EX30 to those treated with ST30 to measure tooth movement predictability. EX2016, ¶31. This analysis was disclosed to the Patent Office during prosecution (*see* EX1010, 1240-41, 1245) and is also described in the Chen declaration. EX2016, ¶31. Patients treated with ST30

showed strongly significant improvements in each of fourteen tested measures of tooth movement predictability, showing an average overall improvement of 75%. EX2016, ¶¶32-35; *see* EX2027.

150. Another study by Wheeler et al. (EX2028) further confirmed the significant improvement of ST30 relative to EX30. EX2016, ¶36. The study was double-blinded with random assignment between patients treated with SmartTrack (ST30) aligners and patients treated with EX30 aligners. EX2028, 22. Tooth movement was tracked over a 25-day period using scanning technology for a total of 33 patients. EX2028, 28. Patients tracked with ST30 showed significantly more tooth movement as a percentage of targeted movement (73.06% vs. 42.75%) during the first 14 days of treatment, and total movement over 25 days remained substantially greater for ST30 aligners (77.38% vs. 50.07%). EX2028, 25-26. This study provided further evidence confirming the substantial superiority of ST30 over EX30 at providing orthodontic tooth movement in patients. *See* EX2028, 27 ("Our study confirmed that in a human tooth movement model, the SmartTrack material produces significantly more tooth movement than the previous Invisalign plastic, EX30."); EX2016, ¶36.

151. In my opinion, these clinical trial results and the retrospective analysis results show a significant and surprising improvement in aligners made according to the claims of the multilayer material patents (that is, aligners made from a

multilayer sheet having layers of co-polyester and thermoplastic polyurethane elastomers as recited in the claims). A POSITA would not have expected the improved performance that ST30 exhibited relative to EX30, and would have attributed this unexpected improvement in performance to the combination of materials as used in orthodontic appliances, which correspond to the claims of the multilayer appliance patents.

152. Furthermore, a POSITA also would have viewed EX30 as the most appropriate comparator of performance for prior art aligners. As I described above, and as further explained in the Chen declaration, Align tested the properties of numerous different potential aligner materials and confirmed ST30's excellent and superior material properties. EX2016, ¶¶22-23, 37. Additionally, EX30 had long been the market-leading material for orthodontic aligners, consistent with its excellent performance relative to other known aligner material compositions. EX2016, ¶27. Accordingly, just as the ST30 aligners embodied by the claims of the multilayer appliance patents showed superior performance to EX30, ST30 would also be expected to exhibit superiority of performance relative to aligners made with materials taught by the references relied on by Dr. Osswald.

153. In my opinion, a POSITA would have viewed these unexpectedly superior results as further supporting the nonobviousness of the claims of the multilayer appliance patents.

D. Evidence of Copying Supports the Multilayer Appliance Patents' Nonobviousness

154. I understand that the Petitioner in the IPRs of the multilayer appliance patents is ClearCorrect Operating LLC, and I further understand that ClearCorrect is a member, along with Bay Materials LLC, of the Straumann Group, headed by Straumann AG. *See* EX1023, ¶4; EX2008, ¶4 (page 5). I also understand that Bay Materials manufactures the material Zendura FLX, which is used by ClearCorrect to make orthodontic aligners, marketed as "ClearQuartz." *See, e.g.*, EX1023, ¶4; EX2008, ¶¶4 (page 5), 18 (pages 8-9). As I explain below, these Zendura FLX aligners are substantially similar to the ST30 aligners of Align, in that they also feature a three-layer design including a hard co-polyester layer and a soft thermoplastic polyurethane layer and they also are encompassed by at least the independent claims of the multilayer appliance patents. *See also* EX2016, ¶38.

155. I understand that in a previous IPR proceeding between 3M Company and Bay Materials, LLC, IPR2022-01214, the Patent Owner, Bay Materials, argued that its Zendura FLX material embodied and was coextensive with at least claim 1 of U.S. Patent No. 10,946,630. EX2025, 51-54. Dr. Osswald filed a declaration in the same proceeding in which he made the same argument. *See* EX2026, ¶¶171-76.

156. Claim 1 of U.S. Patent No. 10,946,630 recites as follows:

1. A polymeric sheet composition, comprising:

at least two outer layers A and C and an elastomeric inner layer B,

wherein one or more of the outer layers A and C is a polyester or co-polyester having a flexural modulus of from about 1,000 MPa to 2,500 MPa, the inner layer B is comprised of an elastomeric material having a hardness from about A80 to D75,

and the polymeric sheet composition has a flexural modulus of from about 750 MPa to 2,000 MPa.

EX2010, claim 1.

157. As outlined in the arguments by Bay Materials and Dr. Osswald, Zendura FLX is a multilayer sheet having three polymer layers. EX2025, 51-54; EX2026, ¶¶171-76. These layers include a copolyester layer having a flexural modulus of from 1,000 to 2,500 MPa, which corresponds to about 150,000 psi to about 362,000 psi. *Id.* This falls within the range of greater than about 150,000 psi recited for the hard layer in each independent claim of the multilayer appliance patents. The three layers also include an elastomeric layer having a hardness from about A80 to D75. *Id.* This also falls within the range of hardness from about 60 A to about 85 D recited for the soft layer in each independent claim of the multilayer appliance patents.

158. I further understand that in district court litigation running in parallel to the present IPRs between ClearCorrect and Align, Align has accused ClearCorrect of infringing each of the multilayer appliance patents due to its

manufacture and sales of aligners with the Zendura FLX material that includes hard layers of Tritan copolyester and a soft layer of thermoplastic polyurethane elastomer. *See, e.g.*, EX1023, ¶¶70, 87-88, 92, 108-09, 111, 126-27, 134, 148-49.

159. ClearCorrect's website advertises that its aligners are made from Bay Materials' Zendura product. EX2022; *see also* EX2023 (ClearCorrect aligners made with Zendura FLX). Bay Materials' website further confirms that Zendura FLX's elastomeric layer is a thermoplastic polyurethane elastomer. EX2024.

160. ClearCorrect, through related company Bay Materials, was aware of Align's family of multilayer appliance patents. For example, the Bay Materials patent involved in the IPR with 3M (U.S. Patent No. 10,946,630) specifically cites to U.S. Patent Nos. 9,655,691 and 9,655,693 as prior art that it compares to its claimed invention. EX2010, 17:16-24, 19:63-20:9. I understand that each of the multilayer appliance patents claims priority to U.S. Patent No. 9,655,691, as does U.S. Patent No. 9,655,693. *See* EX1001, cover. Bay Materials and ClearCorrect thus had access to the multilayer appliance patents and their family members, U.S. Patent Nos. 9,655,691 and 9,655,693.

161. Furthermore, in the IPR with 3M, Bay Materials and Dr. Osswald specifically identified Align's SmartTrack (which as I explained above embodies the claims of each multilayer material patent) as the best-selling aligner on the market and the appropriate comparator for purposes of secondary considerations.

EX2025, 56-59; EX2026, ¶¶179-82. Indeed, Bay Materials and Dr. Osswald both asserted that Zendura FLX, the aligners of which are encompassed by the multilayer material patents' claims, showed unexpected results. *Id.* Thus, the arguments of ClearCorrect's related company, Bay Materials, as well as those of Dr. Osswald, indicate that ClearCorrect, by making aligners using Bay Materials' Zendura FLX material, both copied Align's SmartTrack material and recognized the presence of secondary indicia of nonobviousness associated with embodiments of those claims (specifically, with aligners of a hard-soft-hard configuration, in addition to aligners of a soft-hard-soft configuration as discussed above).

162. Accordingly, the copying of Align's SmartTrack material and the multilayer appliance patents by ClearCorrect and Bay Materials, as well as the arguments made by Bay Materials and Dr. Osswald before the Patent Office of unexpected results related to ClearCorrect's aligners' materials, further support the nonobviousness of the multilayer appliance patents.

XIII. CONCLUDING STATEMENTS

163. In signing this declaration, I understand that the declaration will be filed as evidence in a contested case before the Patent Trial and Appeal Board of the United States Patent and Trademark Office. I acknowledge that I may be subject to cross-examination in this case and that cross-examination will take place within the United States. If cross-examination is required of me, I will appear for

cross-examination within the United States during the time allotted for cross-examination.

164. I declare that all statements made herein of my knowledge are true, and that all statements made on information and belief are believed to be true, and that these statements were made with the knowledge that willful false statements and the like so made are punishable by fine or imprisonment, or both, under Section 1001 of Title 18 of the United States Code.

Dated: February 20, 2026 By: _____

Robert Kimmel, Sc.D.

XIV. EXHIBIT LIST

A. Petitioner's Exhibits Cited Herein

Exhibit No.	Description
613-1001	U.S. Patent No. 10,973,613
384-1001	U.S. Patent No. 11,154,384
090-1001	U.S. Patent No. 11,648,090
091-1001	U.S. Patent No. 11,648,091
1003	U.S. Pub. No. 2005/0100853 (Tadros)
1005	U.S. Pub. No. 2011/0020761 (Kalili)
1006	D.S. Porter and R.S. Beavers, *Dishwasher Safe*
613-1007	Osswald Declaration, '613 patent
384-1007	Osswald Declaration, '384 patent
090-1007	Osswald Declaration, '090 patent
091-1007	Osswald Declaration, '091 patent
1008	International Publication No. WO 2006/096558 (Wen)
1009	Bayer Corporation, TEXIN® 990R Thermoplastic Polyurethane Product Information
1010	Prosecution History of U.S. Patent Application No. 13/470,681
1019	W.J. Schrenk & T. Alfrey, Jr., *Polymer Blends* Chapter 15
1023	Complaint for Damages and Injunctive Relief, Align Technology, Inc. v. ClearCorrect Operating, LLC, Case No. 6:24-cv-00187 (W.D. Tex. Apr. 11, 2024) (ECF No. 1)
1042	Ebnesajjad et al., Handbook of Adhesives and Surface Preparation

1051	U.S. Patent No. 6,077,075 (Bedard)
1104	U.S. Patent No. 9,022,903 (Rafih)
1106	U.S. Pub. No. 2012/0136089
1108	U.S. Pub. No. 2012/0021151
1109	U.S. Pub. No. 2013/0085530
1110	U.S. Patent No. 9,060,918
1113	First Choice, What Are the Benefits of Invisalign® Invisible Braces and How Does the Process Work?, https://firstchoicedental.com/blog/what-are-benefits-invisalignrinvisible- braces-and-how-does-process-work/
1118	Internet Archive Compilation, Eastman Tritan Data Sheets

B. Patent Owner's Exhibits Cited Herein

Exhibit No.	Description
2008	Defendants' Answer, Affirmative Defenses, and Counterclaims (Public Version), *Align Technology, Inc. v. ClearCorrect Operating LLC*, Case No. 6:24-CV-00187 (W.D. Tex. Jul. 16, 2024) (ECF No. 56)
2010	U.S. Patent No. 10,946,630 to Stewart et al.
2015	*Curriculum vitae* of Dr. Robert Kimmel
2016	Declaration of Yan Chen
2017	Osswald Deposition Transcript
2019	Daniel J. Brunelle et al., "Optimization of poly(1,4-cyclohexylidene cyclohexane-1,4-dicarboxylate (PCCD) preparation for increased crystallinity," 47(11) *Polymer* 4094 (2006)

2020	James L. Throne, Understanding Thermoforming, Ch. 11 (2008)
2021	U.S. Patent No. 8,178,647 (Hawkins)
2022	ClearCorrect Support – Aligner FAQs, https://support.clearcorrect.com/hc/en-us/articles/204800937-Aligner-Material-FAQs
2023	ClearCorrect – The Premier Aligner Clinical Evidence Summary, https://www.straumann.com/content/dam/sites/clearcorrect/xy/landing/aao-2025/113896_ClearCorrect_PremierAligner_SummaryClinicalEvidence_Superside_V3.pdf
2024	Zendura Dental – Why Zendura, https://www.zenduradental.com/pages/why-choose-zendura
2025	*3M Co. v. Bay Materials LLC*, IPR2022-01214, Paper 21 (Patent Owner's Response) (Excerpt) (Apr. 12, 2023)
2026	*3M Co. v. Bay Materials LLC*, IPR2022-01214, Exhibit 2006 (Osswald Declaration, Public Version) (Excerpt) (Apr. 12, 2023)
2027	Align Technology, "SmartTrack: Technology that's made to move" (2018)
2028	Timothy Wheeler et al., "Effect of aligner material on orthodontic tooth movement," 1(1) Journal of Aligner Orthodontics 21 (2017)