United States Patent [19]

Frey

[11] **Patent Number: 4,826,420**

[45] **Date of Patent: May 2, 1989**

[54] **APPARATUS FOR FORMING THERMOPLASTIC LAMINATES INTO MAJOR SECTIONS**

[75] Inventor: **Luther R. Frey**, Sedgwick County, Kans.

[73] Assignee: **The Boeing Company**, Seattle, Wash.

[21] Appl. No.: **132,903**

[22] Filed: **Dec. 14, 1987**

Related U.S. Application Data

[62] Division of Ser. No. 817,282, Jan. 9, 1986, Pat. No. 4,759,815, Division of Ser. No. 665,551, Oct. 29, 1984, Pat. No. 4,583,935.

[51] **Int. Cl.**[4] **B29C 53/04**

[52] **U.S. Cl.** **425/394**; 264/322; 264/323

[58] **Field of Search** 425/384, 383, 394, 395, 425/397; 264/322, 292, 316, 339, 323; 72/379, 380, 383, 384, 386, 394, 401

[56] **References Cited**

U.S. PATENT DOCUMENTS

Re. 19,504	3/1935	Moore	264/292
1,877,629	9/1932	Replogle	264/277
2,420,119	5/1947	Boehm et al.	264/339
2,480,774	8/1949	Rossheim et al.	264/339
2,648,370	8/1953	Beach	264/339
2,974,366	3/1961	Bauman	264/292
3,264,392	8/1966	Taplin	264/242
3,340,714	9/1967	Pohl et al.	264/292
3,533,872	10/1970	Robbins et al.	264/294
3,557,277	1/1971	Broderson et al.	264/316
3,584,109	6/1971	Meadors et al.	264/292
3,657,040	4/1972	Shobert	264/174
3,861,847	1/1975	Barnett	425/324.1
3,884,612	5/1975	Parmann	425/384
3,890,079	6/1975	Slater	425/155
3,891,364	6/1975	Muller	425/28.1
3,922,899	12/1975	Fremont et al.	72/128
4,022,860	5/1977	Sugen et al.	264/339
4,057,022	11/1977	Koshino et al.	72/379
4,073,859	12/1975	Baumgartner et al.	264/322
4,097,573	6/1978	Parmann	264/322
4,098,785	7/1978	Haruta et al.	264/322
4,160,006	7/1979	Patzner et al.	264/322
4,184,905	1/1980	Ogata et al.	264/322
4,196,339	4/1980	Russo	264/322
4,208,574	6/1980	Schäfer	249/78
4,610,837	9/1986	Frey	264/339

FOREIGN PATENT DOCUMENTS

22404	7/1912	Norway	72/386
2094681	9/1982	United Kingdom	72/381

Primary Examiner—Willard Hoag

Attorney, Agent, or Firm—Kokjer, Kircher, Bradley, Wharton, Bowman & Johnson

[57] **ABSTRACT**

Apparatus for bending flat thermoplastic laminates into structural shapes such as angles, channels, Z sections, J sections and I sections. In order to bend the laminate into the desired shape by appropriate tooling, heat is applied in a localized manner only to the area that is to be bent. The application of heat is sufficient to heat the laminate to its softening temperature in the bend area, and the plies of the laminate can thus slip in the bend area only as bending force is applied so that the bend can be made without the need to heat the entire laminate to the softening temperature.

11 Claims, 2 Drawing Sheets

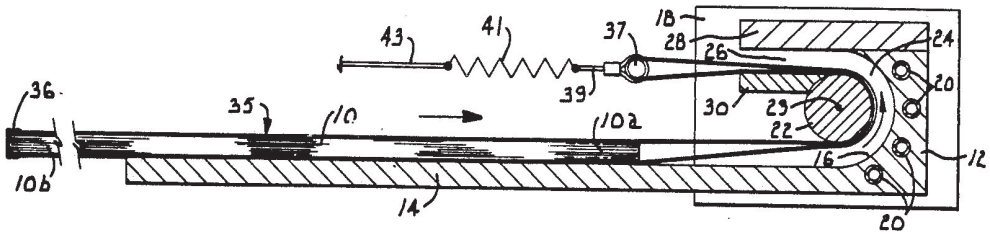

Fig. 1.

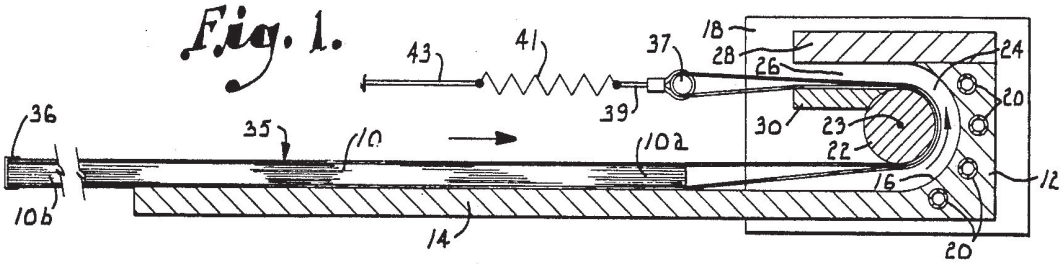

Fig. 2.

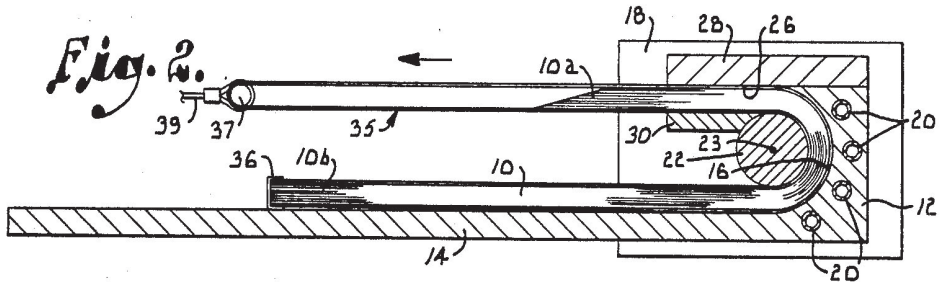

Fig. 3.

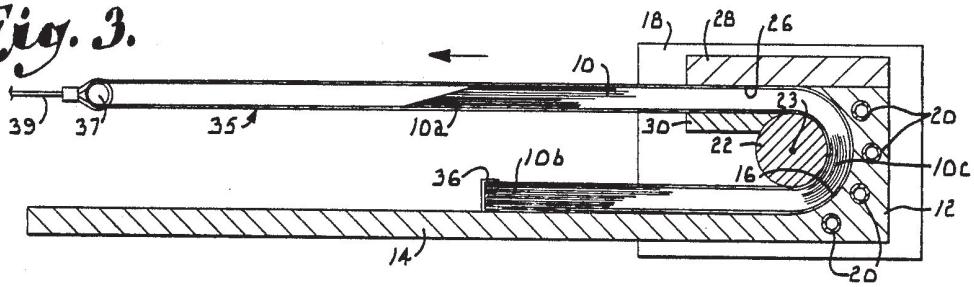

Fig. 4.

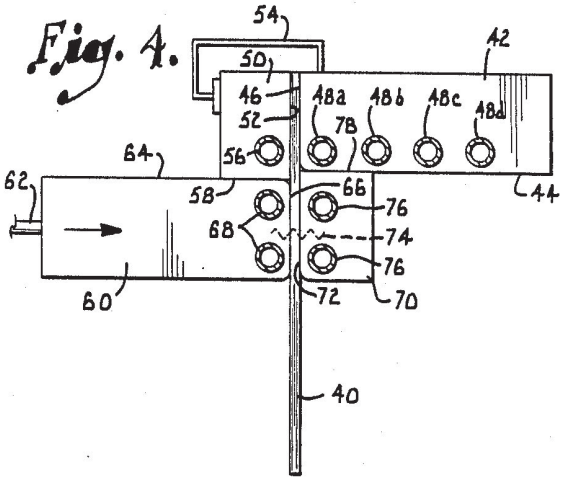

Fig. 5.

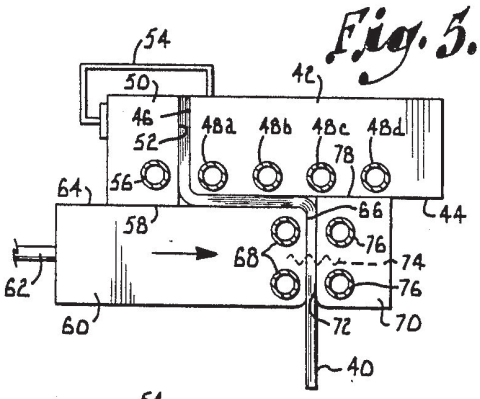

Fig. 6.

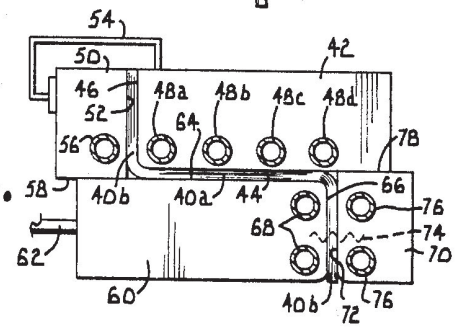

Fig. 7.

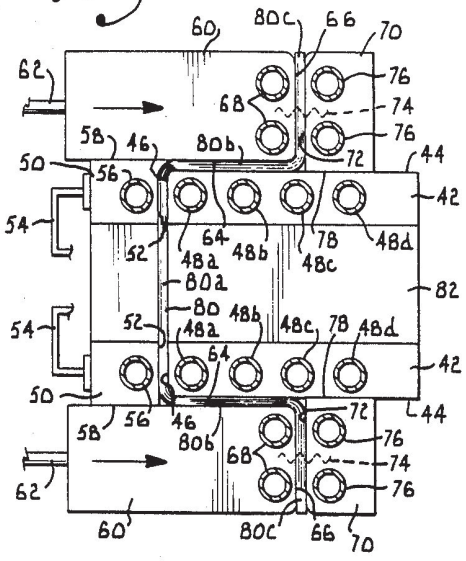

Fig. 8.

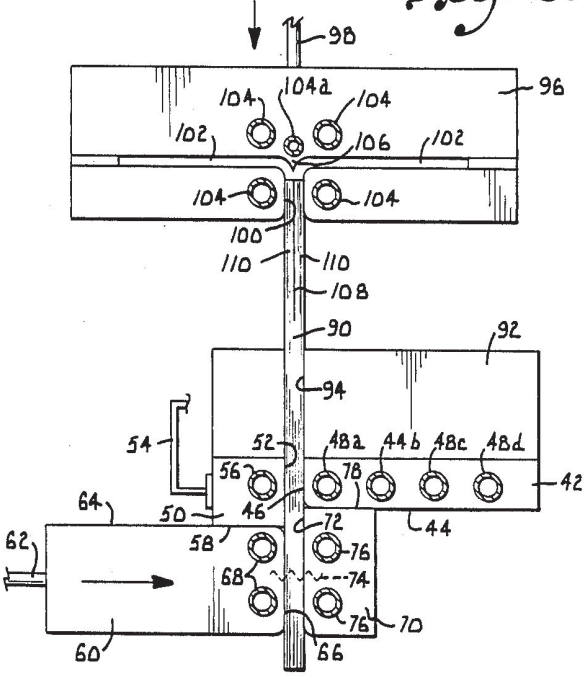

Fig. 9.

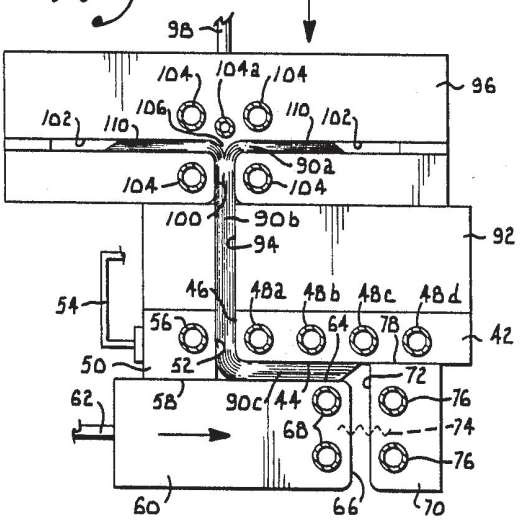

Fig. 10.

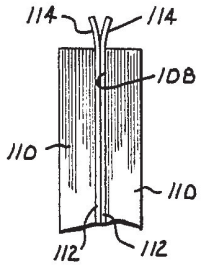

APPARATUS FOR FORMING THERMOPLASTIC LAMINATES INTO MAJOR SECTIONS

This is a division of application Ser. No. 817,282, filed Jan. 9, 1986 and now U.S. Pat. No. 4,759,815, issued July 26, 1988, which is a division of application Ser. No. 665,551, filed Oct. 29, 1984, now U.S. Pat. No. 4,583,935, issued Apr. 22, 1986.

BACKGROUND OF THE INVENTION

This invention relates in general to the field of thermoplastics and deals more particularly with the forming of thermoplastic laminates into various shapes.

Because thermoplastic laminates have many desirable qualities, they are widely used in a variety of applications. However, a major drawback associated with thermoplastic laminates is the considerable difficulty that is encountered in forming the laminates into the shapes that are necessary for them to function as major structural members. The most desirable laminates are obtained by consolidating multiple plies into flat sheets which harden when cooled to room temperature from the elevated consolidation temperature. Subsequent curving or bending of the laminate requires that the plies slip relative to one another, and this can be achieved only if the laminate is heated to the softening temperature at which ply slippage can occur.

In the past, techniques common in the metal bending technology have been used with thermoplastic laminates, despite the recognized differences in the properties of thermoplastic as compared to metal. For example, the entire laminate and sometimes the bending tool are heated to the softening temperature of the thermoplastic to allow ply slippage anywhere in the laminate at the same time. As can easily be appreciated, this technique requires a considerable amount of heat because it relies on heating of the entire laminate to the softening temperature. Due to the high cost of energy, the excessive heat that is required to carry out this process makes its practicality marginal at best. In addition, the tooling that is required is unduly complex, and the costs are increased accordingly.

SUMMARY OF THE INVENTION

The present invention is directed to an improved method and apparatus which takes a novel approach to the shaping of laminated thermoplastic sheets. An important feature of the invention is the use of localized heating of the laminates only in the areas that are being bent so that the heat requirements are minimized and the ply slippage occurs only in the areas that are being bent. By using localized heating and effecting ply slippage in a unique way, thermoplastic laminates can be easily and economically formed into virtually any desired cross sectional shape. Complex shapes such as I and J sections which have not heretofore been practical for thermoplastic laminates can be formed in accordance with the present invention, as can angles, channels, Z sections and other configurations.

In accordance with the invention, tools having the appropriate shapes are used to effect bending of an initially flat thermoplastic laminate into a major section having the desired section. In the case of a 180° bend, the laminate is fed through a curved passage formed between a concave tool surface and a rotatable spool. The passage is heated so that only the portion of the laminate that is located in the passage at any one time is heated to the softening temperature of the thermoplastic. Thus, only the portion of the laminate that is being bent is heated to a temperature at which ply slippage can occur. The remainder of the laminate remains below the softening temperature.

In the case of shapes such as angles, channels and Z sections, two or more tools are moved relative to one another to bend the laminate in the desired configuration while heat is applied in a localized manner only to the areas of the laminate where bending is taking place. The heat is preferably applied by heating tubes which are selectively energized and deenergized to heat only the bend area of the laminate, thus minimizing the energy consumption without hindering the bending operation. More complicated shapes such as I and J sections can be formed by including plies of foil such as titanium foil in the laminate and using special tools to bend the opposite sides of the separated laminate in opposite directions to form two flanges, again with the application of localized heat only to the areas that are being bent.

DESCRIPTION OF THE DRAWINGS

In the accompanying drawings which form a part of the specification and are to be read in conjunction therewith and in which like reference numerals are used to indicate like parts in the various views:

FIG. **1** is a diagrammatic sectional view showing tooling which can be used in accordance with the present invention to achieve a bend of 180° in a flat thermoplastic laminate, with the laminate being fed toward the tooling;

FIG. **2** is a diagrammatic view similar to FIG. **1**, but showing the laminate pulled partially through the tooling;

FIG. **3** is a diagrammatic view similar to FIGS. **1** and **2** but showing the laminate pulled more fully through the tooling around a spool by a thin sheet metal strap arrangement secured to the leading end of the laminate;

FIG. **4** is a diagrammatic view showing a pair of tools which may be used to bend a flat thermoplastic laminate into a Z shaped section in accordance with the present invention, with the movable tool in its initial position prior to the bending of the laminate;

FIG. **5** is a diagrammatic view similar to FIG. **4** but showing the movable tool advanced to partially shape the laminate into a Z shaped section;

FIG. **6** is a diagrammatic view similar to FIGS. **4** and **5** but showing the movable tool fully advanced to form the laminate into a Z shaped section;

FIG. **7** is a diagrammatic view showing tools which are used to form a flat thermoplastic laminate into a hat shaped channel section in accordance with the invention;

FIG. **8** is a diagrammatic view showing tools which can be used to form a flat thermoplastic laminate into a J shaped section in accordance with the invention, with the two movable tools in their initial positions prior to shaping of the laminate;

FIG. **9** is a diagrammatic view similar to FIG. **8** but showing the movable tools fully advanced to form the laminate into a J shaped section; and

FIG. **10** is a fragmentary view on an enlarged scale of the upper end portion of the thermoplastic laminate shown in FIG. **8**.

DETAILED DESCRIPTION OF THE INVENTION

Referring now to the drawings in more detail and initially to FIGS. **1–3**, numeral **10** generally designates a thermoplastic laminate formed by multiple plies bonded together face to face to form a relatively thick, flat sheet. As is well known, the laminate **10** can be formed by consolidating the plies at an elevated softening temperature of the thermoplastic and then allowing the laminate to cool to room temperature. At room temperature, the laminate **10** is in the form of a hard, flat sheet. The thickness of the laminate **10** can vary as desired.

In accordance with the present invention, a tool **12** has a flat bed portion **14** which leads to a uniformly curved concave surface **16** formed on the tool **12**. The concave surface **16** curves through an arc which in the illustrated embodiment is approximately 180°. Suitable support plates **18** may be provided to support the tool **12**.

The tool **12** is heated by a plurality of heating tubes **20** which are arranged in an arcuate pattern extending generally along and adjacent to the concave surface **16**. The heating tubes **20** are spaced apart from one another along substantially the entire extent of surface **16**. The tubes **20** may be heated by any suitable means. Preferably, the tubes incorporate infrared heaters, but other types of heating elements may be employed as well.

A cylindrical spool **22** is supported for rotation about a central axis **23** which may extend between the support plates **18**. This spool **22** may also be heated as required to attain forming temperature in the laminate. The cylindrical outside surface of the spool **22** is spaced from the concave surface **16** of tool **12** and cooperates therewith to form a curved passage **24** having a uniform width substantially equal to the thickness of the laminate **10**. Passage **24** extends through an arc of approximately 180°, although other configurations are possible.

The passage **24** has an outlet end **26** formed between upper and lower blocks **28** and **30**. Blocks **28** and **30** are maintained at a temperature well below the softening temperature of the thermoplastic material which forms the laminate **10**, and the laminate is thus cooled below the softening temperature in the outlet portion **26** of the passage.

In order to form the laminate **10** into a 180° bend, the laminate is initially trimmed to the width of the spool **22**. The heating tubes **20** are energized to heat the concave surface **16** to a temperature at least as great as the softening temperature of the thermoplastic which is to be formed. Obviously, if necessary in view of the particular laminate being formed, spool **22** may also be heated at this time. Normally, this temperature is in the range of approximately 650°–700° F. By heating the surface **16** and spool **22**, if necessary, passage **24** is heated to in turn heat the portion of the laminate which is fed into the curved passage **24**.

The laminate **10** is disposed flatly on the bed **14** with a leading marginal edge disposed between the ends of an elongated, flexible strap **35** which may be of sheet metal or the like. Strap **35** is bent back upon itself and looped around a transversely circular shaft **37**. One end of a short length of cable **39** is attached to shaft **37** and the other end of cable **39** is attached to an end of a spring **41**. The other end of spring **41** is attached by a cable **43** to a pulling unit (not shown).

The flexible straps **34** are firmly secured to laminate **10** by suitable clamps **36**.

The laminate **10** is slowly pulled on the bed such that its leading end **10*a*** is extended into the through the heated passage **24**. As the leading end portion of the laminate is fed into passage **24**, it is heated to the softening temperature at which the plies of the thermoplastic laminate slip relative to one another. This ply slippage permits the laminate to gradually and smoothly bend in conformity with the curved shape of passage **24** which applies a bending force to the laminate as it is fed through the passage. Since the plies which are relatively far from the spool **22** must travel a greater distance than plies which are closer to the spool, ply slippage is necessary, and the leading end **10*a*** of the laminate assumes the beveled configuration shown in FIG. **2** as it passes through the passage **24**. Once the leading end **10*a*** has reached the outlet **26** of the passage, its bending is complete and no additional ply slippage need occur in that part of the laminate. The leading end **10*a*** is cooled below the softening temperature as it passes through the relatively cool outlet **26** of the passage, and the trailing portions of the laminate are subsequently bent, as they pass through the passage **24** and are heated by the heat generated by the heating tubes **20** and heated spool **22**, and cooled as they pass through outlet **26**. Controlled tension can be maintained on cable **43** in order to pull the laminate into the passage in the desired fashion. Spring **41** serves to assure uniformity of the forces on the laminate during the forming operation.

The laminate can be pulled through the passage **24** any desired distance. In order to form a 180° bend **10*c*** near the center of the laminate, the feeding can be terminated at the position shown in FIG. **3**. The heating tubes **20** and the means for heating spool **22** can then be deenergized to cool the tool and the laminate. Once the laminate has cooled sufficiently to harden, the spool **22** can be released and removed, and the bent laminate **10** can then be removed from the tool assembly.

It is important to recognize that only the passage **24** is heated so that heat is applied only to the portion of the laminate that is being bent at any one time. Consequently, the laminate is heated only in those areas at which ply slippage is required to effect the necessary bend in the laminate, and this localized application of heat to the laminate conserves energy while at the same time allowing the ply slippage to occur as required. The trailing end portion **10*b*** of the laminate which remains on the bed **14** at the time the feeding of the laminate is terminated is not heated at all and remains in the hardened condition at all times. By avoiding the heating of the entirety of the laminate **10**, the possibility of delamination is minimized, and the plies are tightly bonded together throughout the laminate at the end of the forming operation.

Referring now to FIGS. **4–6**, the principles of the present invention can be used to form an initially flat sheet of thermoplastic laminate **40** into a Z shaped section. A stationary tool **42** has a flat forming surface **44** on one side and a flat clamping surface **46** on an adjacent side. The forming and clamping surfaces **44** and **46** intersect at a right angle at one corner of the stationary tool **42**. This corner is radiused to the inside bend radius desired for the finished part. A plurality of heating tubes **48*a*, 48*b*, 48*c*** and **48*d*** are provided in the stationary tool **42** and are arranged in a straight row extending generally along and adjacent to the forming surface **44**. The heating tubes may be infrared heating tubes or any other suitable type of heating elements.

A clamping block **50** is used to clamp one end portion of the laminate **40** against the clamping surface **46**. The clamping block **50** is movable toward and away from surface **46** and cooperates therewith to form a thin passage or channel **52** therebetween. The end portion of the laminate is received in the passage **52**. A suitable clamp mechanism **54** serves to rigidly clamp the laminate **40** in channel **52** against the clamping surface **46**. The clamping block **50** is provided with a single heating tube **56** which is located adjacent to the intersection between the forming and the clamping surfaces **44** and **46** of tool **42**.

The clamping block **50** projects slightly beyond the forming surface **44** of tool **42**, and a flat guide surface **58** is presented on the end of the projecting portion of block **50**. The guide surface **58** is offset from the forming surface **44** by a distance substantially equal to the thickness of the laminate **40**.

A movable tool **60** cooperates with the stationary tool **42** and can be moved generally along the forming surface **44** of the stationary tool. Numeral **62** identifies the rod of a hydraulic cylinder which serves to reciprocate the movable tool **60** between the positions shown in FIGS. **4** and **6**.

The movable tool **60** has a flat forming surface **64** which is parallel to the forming surface **44** of the stationary tool. Intersecting with forming surface **64** at a right angle is a slide surface **66** formed on the leading end of the movable tool **60**. This corner is radiused with an identical radius to that between surface **46** and surface **44** and serves to form the inside bend radius of the finished part. A pair of heating tubes **68** are provided in the movable tool and are spaced apart from one another adjacent to the slide surface **66**.

A guide block **70** cooperates with the slide surface **66** to form a passage or channel **72** which receives the thermoplastic laminate **40**. A spring **74** continuously urges the guide block **70** toward surface **66** in order to maintain the laminate **40** against the slide surface while at the same time permitting the laminate to slide along the slide surface due to the resiliency of the spring. The guide block **70** is provided with a pair of heating tubes **76** which are spaced apart from one another and located adjacent to the channel **72**.

The guide block **70** projects beyond the forming surface **64** of the movable tool **60**. A flat guide surface **78** formed on block **70** is offset from the forming surface **64** of the movable tool by a distance substantially equal to the thickness of the laminate **40**. Guide surface **58** is in constant contact with forming surface **64**, and the other guide surface **78** is in constant contact with the other forming surface **44**.

The laminate **40** can be bent into a Z shaped section by initially inserting the laminate into the aligned channels **52** and **72**, as shown in FIG. **4**. The end portion of the laminate is rigidly clamped in channel **52** and against the clamp surface **46** by tightening the clamp **54**. After forming temperature is reached in laminate **40**, a predetermined force can be exerted by the cylinder rod **62** to move the movable tool **60** to the right. The path of movement of the movable tool is perpendicular to the channels **52** and **72** and maintains the forming surfaces **44** and **64** parallel to one another and uniformly spaced apart a distance substantially equal to the thickness of the laminate **40**.

Before the movement of the movable tool **60** begins, heating tube **56** is energized along with both of the heating tubes **68** and both of the heating tubes **76**. However, only the first heating tube **48*a*** of the stationary tool is energized at this time. As soon as forming temperature is reached, and the movable tool begins to move, only the portion of the laminate adjacent the intersection between surfaces **44** and **46** is heated from opposite sides thereof by the energized heating tubes. The heat is thus applied to the laminate in a localized manner and is sufficient to raise the temperature to the softening temperature necessary to permit the plies of the laminate to slip relative to one another. Therefore, as the movable tool **60** is moved from the position of FIG. **4** toward the position of FIG. **5**, the ply slippage resulting from the localized application of heat permits the laminate to bend through a right angle at the intersection between surfaces **44** and **46** where the bending force is applied. The laminate also bends through a right angle at the intersection between surfaces **64** and **66**. The ply slippage is equal and opposite at the two corners, so no ply slippage occurs anywhere else in the laminate. As the movement of tool **60** progresses, the force of spring **74** maintains the laminate against surface **66** while permitting it to slip along surface **66** in a direction parallel to the laminate.

After the laminate has been bent at the intersection between surfaces **44** and **46**, heating tube **56** is deenergized. As the movable tool continues to move to the right, the heating tubes in the stationary tool **42** are energized and deenergized in a pattern to maintain localized heating of the laminate only in the area that is being bent. As channel **72** moves away from it, tube **48*a*** is deenergized, and heating tubes **48*b*** and **48*c*** are energized in succession as the area of the laminate which is being bent progressively moves to the right. When the position of FIG. **5** is reached, both tubes **48*b*** and **48*c*** are preferably energized, while tubes **48*a*** and **48*d*** are deenergized. As tool **60** approaches the position shown in FIG. **6**, tubes **48*b*** and **48*c*** are deenergized in succession and tube **48*d*** is energized since it is then located adjacent to the area at which the laminate is being bent. Tubes **68** and **76** remain energized throughout the forming operation.

The movement of tool **60** is terminated when the position of FIG. **6** is reached. At this time, the laminate has been bent into the shape of a Z having its web **40*a*** formed between the confronting forming surfaces **44** and **64** and its two legs or flanges **40*b*** formed in the channels **52** and **72**. All of the heating tubes can then be deenergized to allow the laminate to cool until it hardens. Once the laminate has hardened, it can be removed from the tools, and the movable tool can be returned to its initial position (FIG. **4**).

The end of the laminate which is clamped in channel **52** is not heated at all, and the opposite end which is located in channel **72** at the end of the shaping operation has not been deformed at all. Due to the localized application of heat to the laminate, only the area of the laminate which is being bent is heated so that the heating requirements are minimized and ply slippage is allowed only where necessary to permit the laminate to be bent as desired.

It is noted that the movement of the movable tool **60** can be terminated at any time so that a Z section with unequal legs could be formed. Similarly, the movable tool can be moved to the right beyond the position of FIG. **6** to form an angle member once the laminate has slipped completely out of channel **72**.

The arrangement shown in FIG. **7** can be used to form an initially flat thermoplastic laminate **80** into a hat

shaped channel section. A pair of stationary tools are included in the arrangement of FIG. 7, and the same reference numerals are used to identify the components of the stationary tools as were used in FIGS. 4–6. Each stationary tool **42** has a clamp block **50** cooperating therewith in the same manner discussed in connection with FIGS. 4–6. A spacer **82** is interposed between the stationary tools **42**, and the forming surfaces **44** of the two tools **42** face in opposite directions on opposite sides of the spacer **82**.

A pair of movable tools **60** which may be identical to the movable tools **60** shown in FIGS. 4–6 are included in the arrangement of FIG. 7, along with a guide block **70** for each movable tool. The movable tools **60** move adjacent to the forming surfaces **44** of respective stationary tools **42** as described earlier.

The laminate **80** is initially in the shape of a flat sheet formed by multiple plies. Channels **52** and **72** are initially aligned with one another, and the laminate is inserted into the channels with a central portion thereof clamped in channels **52** of the stationary tools by clamps **54**. When forming temperature is reached as described for FIGS. 4–6, the movable tools are moved to the right by extension of the cylinder rods **62**, and as the movable tools progress, the heating tubes **48***a*–**48***d* are energized and deenergized in the same pattern described in connection with FIGS. 4–6. Heating tubes **56** are deenergized after the initial bends are made in the laminate at the opposite ends of the portion which is clamped in the channels **52**. Tubes **68** and **76** remain energized throughout the forming operation.

Once the movable blocks have reached the position of FIG. 7, their movement may be terminated. In this position, the laminate **80** has taken the form of a hat shaped channel member having a web **80***a* formed in channels **52**, sidewalls **80***b* formed between the confronting forming surfaces **44** and **64**, and flanges **80***c* formed in the channels **72** of the movable tools. It should be noted that movement of the tools **60** can continue until the laminate has slipped completely out of channels **72**. Then, a channel without flanges will have been formed.

As in the arrangements previously described, the arrangement of FIG. 7 effects localized application of heat to the laminate only at the areas which are being bent. Therefore, the heating requirements are again minimized and ply slippage is allowed only in the necessary area or areas of the laminate. Spacers having different sizes can be used in place of spacer **82** to provide the channel member with a web having virtually any length.

The arrangement show in FIGS. 8 and 9 can be used to form a thermoplastic laminate **90** into a J shaped section. A stationary tool **42** and a movable tool **60** having the same construction as described previously are included, along with a clamp block **50** and a guide block **70**. A spacer **92** is attached to the stationary tool **42** on the side opposite the forming surface **44**, and the spacer **92** presents a channel **94** in alignment with channel **52** to receive the laminate.

A second movable tool **96** can be moved toward and away from the spacer **92** by a rod **98** which may be the rod of a hydraulic cylinder. A cavity which is formed in tool **96** includes a passage **100** which extends into the bottom surface of the tool and has a width substantially equal to the thickness of the laminate **90**. At its top end, passage **100** intersects with a pair of cross channels **102** which extend in opposite directions from the passage **100**. The cross channels **102** are aligned with one another and are oriented perpendicular to passage **100**. Tool **96** is provided with a plurality of heating tubes **104** which are located adjacent to the intersection between passage **100** and channels **102** on opposite sides of the passage and channels. At the top end of passage **100**, a divider in the nature of a tapered, radiused rib **106** is formed in order to guide the laminate into the cross channels **102** as will subsequently be described. A relatively small heating tube **104***a* is located adjacent to divider **106**.

Laminate **90** is provided during consolidation of the laminate from the multiple plies of material, with a pair of thin foil sheets **112** interposed in the laminate to effectively separate the laminate into a pair of branches **110** (FIG. 10). The foil sheets are interposed in face to face relationship and, while each is bonded to its respective adjacent branch **110**, the foil sheets are not bonded together. Titanium foil is presently preferred for this purpose in view of the similar physical properties between titanium and commonly used laminate materials, but other foils can be used.

The mutually unbonded foil sheets **112** provide a division between laminate branches **110**, and are usually placed so that the two branches are of identical thicknesses, namely one-half of the total thicknesses of the laminate. The sheets of foil insure that the branches **110** may be easily separated from one another. Each foil sheet has a projecting end or tab **114** which extends out of the division **108** between the branches. The space between tabs **114** provides a lead-in area which facilitates separation of the branches **110**.

Laminate **90** can be formed into a J shaped section by initially inserting it through channels **52**, **72** and **94** with the top end of the laminate extending into the passage **100** of tool **96**. The central portion of the laminate is clamped in passages **52** and **94** by tightening the clamp **54**. Tool **60** can be moved to the right in order to bend the lower end of the laminate in the manner described previously. When the laminate has slipped completely out of channel **72**, tool **60** will have reached the position shown in FIG. 9 and its movement can then be terminated. The heating tubes **48***a*–**48***d* are energized and deenergized in the sequence described earlier to apply localized heat only to the area that is undergoing bending.

Simultaneous with the movement of tool **60**, tool **96** is moved downwardly toward the spacer **92**. As tool **96** moves downwardly, the divider **106** enters the space between the projecting ends **114** of the foil sheets **112**. Continued downward movement of divider **106** carries it between the foil sheets and into division **108** to cause the branches **110** to bend into channels **102**. The heating tubes **104** and **104***a* are previously energized so that the branches **110** are bent through right angles into the cross channels **102** as the downward movement of tool **96** continues. When tool **96** has reached the position shown in FIG. 9, it is in contact with spacer **92** and its movement can then be terminated. At this time, the branches **102** together form a cross **90***a* on the top end of the J shaped laminate. The web **90***b* is formed in the channels **52** and **94**, and the base leg **90***c* is formed between the confronting forming surfaces **44** and **64**. Once the J shaped section has cooled enough to harden, it can be removed from the tool assembly.

It should be evident that a tool such as the movable tool **96** can be applied both to the top and bottom ends of a thermoplastic laminate in order to form the lami-

nate into an I shaped section having crosses on both its top and bottom ends. In addition, spacers having various sizes can be used in place of spacer **92** to provide the web portion with virtually any desired length. As in previous arrangements, the localized manner in which heat is applied minimizes the heating requirements while allowing the ply slippage to occur in the areas which are being bent.

From the foregoing, it will be seen that this invention is one well adapted to attain all the ends and objects hereinabove set forth together with other advantages which are obvious and which are inherent to the structure.

It will be understood that certain features and subcombinations are of utility and may be employed without reference to other features and subcombinations. This is contemplated by and is within the scope of the claims.

Since many possible embodiments may be made of the invention without departing from the scope thereof, it is to be understood that all matter herein set forth or shown in the accompanying drawings is to be interpreted as illustrative and not in a limiting sense.

Having thus described the invention, I claim:

1. Apparatus for shaping a thermoplastic laminate having multiple plies, said apparatus comprising:

first and second tools having confronting forming surfaces spaced apart to accommodate the thickness of the laminate therebetween, one of said tools being movable relative to the other along a path maintaining said forming surfaces substantially parallel to one another;

a clamping surface on said first tool intersecting with the forming surface thereof at a first area;

means for rigidly clamping a preselected portion of the laminate against said clamping surface;

a slide surface on said second tool intersecting with the forming surface thereof at a second area;

means for maintaining the laminate against said slide surface while permitting the laminate to slip along the slide surface as said one tool is moved along said path; and

means for applying heat to the laminate in a localized manner as said one tool is moved along said path to raise the temperature of the laminate adjacent said first and second areas to a level at which the plies slip along one another, whereby the ply slippage permits the laminate to bend adajcent said first and second areas during movement of said one tool along said path.

2. Apparatus as set forth in claim **2**, wherein said heat applying means includes a plurality of heating elements arranged in a row extending generally along the forming surface of said first tool, each heating element being energized when said second area is located adjacent thereto and deenergized when said second area is located remotely.

3. Apparatus as set forth in claim **2**, wherein said heat applying means further includes a plurality of heating elements arranged in a row extending generally along said slide surface of the second tool and energized during movement of said one tool along said path.

4. Apparatus as set forth in claim **1**, including:

guide blocks on said first and second tools projecting beyond the forming surfaces thereof and each engaging the forming surface of the other tool to maintain substantially constant spacing between said forming surfaces.

5. Apparatus as set forth in claim **1**, wherein:

said clamping means includes a clamping block and means for clamping said clamping block to said first tool to clamp said preselected portion of the laminate against said clamping surfaces; and

said means for maintaining the laminate against said slide surface includes a guide block and resilient means for urging said guide block toward said slide surface to maintain the laminate against same while permitting slipping of the laminate along said slide surface.

6. Apparatus as set forth in claim **1**, wherein said clamping surface and forming surface of the first tool are substantially perpendicular and said slide surface and forming surface of the second tool are substantially perpendicular to shape the laminate into the general configuration of a Z having a web portion thereof formed between said forming surfaces and leg portions thereof formed along said clamping surface and said slide surface.

7. Apparatus for shaping a thermoplastic laminate having multiple plies, said apparatus comprising:

first and second tools each having a cavity for receiving the laminate, one of said tools being movable relative to the other along a prescribed path;

means for rigidly clamping a preselected portion of the laminate in the cavity of the first tool;

said cavity of the second tool having a predetermined area shaped to effect bending of the laminate therein into a preselected configuration as said one tool moves along said prescribed path; and

means for applying heat to said predetermined area in a localized manner as said one tool moves along said prescribed path, said heat being sufficient to raise the temperature of the laminate adjacent said predetermined area to elevated temperature at which the plies slip along one another to permit the laminate to bend into said preselected configuration during movement of said one tool along said prescribed path.

8. Apparatus as set forth in claim 7, wherein:

a separation is formed in one edge portion of the laminate to provide a pair of separated branches in the laminate on opposite sides of the separation;

said cavity of the second tool includes a passage extending into the second tool for receiving said one edge portion of the laminate and a pair of cross channels extending in opposite directions from said passage at an angle thereto;

said prescribed path carries said first and second tools toward one another to effect bending of said branches in opposite directions into said cross channels, whereby the branches cooperate to form a cross on the laminate; and

said prescribed area is located adjacent the intersection between said passage and cross channels.

9. Apparatus as set forth in claim **8**, including a pair of foil sheets bonded to the respective branches within the separation, said foil sheets being detached from one another to facilitate separation of the branches as the same enter said cross channels, and further including means engageable between said foil sheets for guiding said branches into the respective channels.

10. Apparatus as set forth in claim **9**, wherein each foil sheet has an edge projecting out of the separation beyond said one edge portion of the laminate, said edges of the foil sheets providing a lead-in to facilitate separation of the foil sheets and the respective branches, and

said means engageable between said foil sheets being engageable between said edges of the foil sheets.

11. Apparatus as set forth in claim **8**, including:

a third tool located adjacent a side of the first tool opposite said second tool, said first and third tools having confronting forming surfaces spaced apart to accommodate the thickness of the laminate therebetween;

means establishing a path along which said third tool is movable relative to said first tool, said path maintaining substantially constant spacing between said forming surfaces;

a slide surface on said third tool intersecting with the forming surface thereof at a second predetermined area;

means for maintaining the laminate against said slide surface while permitting the laminate to slip along the slide surface as the third tool moves along said path; and

means for applying heat to said second predetermined area in a localized manner as said third tool moves along said path to raise the temperature of the laminate adjacent said second predetermined area to said elevated level,

whereby the sheet can be shaped into the general configuration of a J having a base leg portion thereof formed between said forming surfaces.

* * * * *