US 20050134561A1

(19) United States

(12) Patent Application Publication

(10) Pub. No.: US 2005/0134561 A1

(43) Pub. Date: Jun. 23, 2005

Tierling et al.

(54) SYSTEM AND METHOD FOR MAPPING INSTRUCTIONS ASSOCIATED WITH HAPTIC FEEDBACK

(76) Inventors: **Kollin M. Tierling**, Milpitas, CA (US); **Juan Manuel Cruz-Hernandez**, Montreal (CA); **Alex S. Goldenberg**, San Francisco, CA (US); **Danny A. Grant**, Montreal (CA)

Correspondence Address:
COOLEY GODWARD LLP
ATTN: PATENT GROUP
11951 FREEDOM DRIVE, SUITE 1700
ONE FREEDOM SQUARE- RESTON TOWN CENTER
RESTON, VA 20190-5061 (US)

(21) Appl. No.: **11/001,190**

(22) Filed: **Dec. 2, 2004**

Related U.S. Application Data

(60) Provisional application No. 60/530,980, filed on Dec. 22, 2003.

Publication Classification

(51) **Int. Cl.**[7] **G09G 5/00**

(52) **U.S. Cl.** **345/156**

(57) **ABSTRACT**

An embodiment of the invention provides a system and method for mapping instructions associated with haptic feedback. An apparatus having a controller including an effect mapper is disclosed. The controller is configured to receive effect instructions from at least one application. The effect mapper is in communication with the controller, and is configured to produce multiple haptic instructions in response to at least a portion of the received effect instructions. The haptic instructions are at least partially based on a physical characteristic of a haptic device.

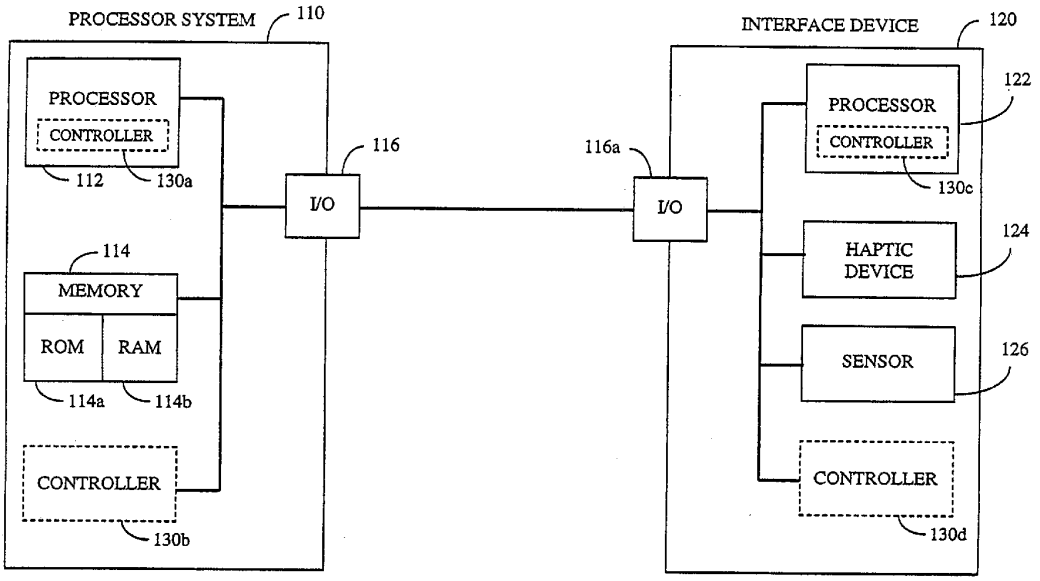

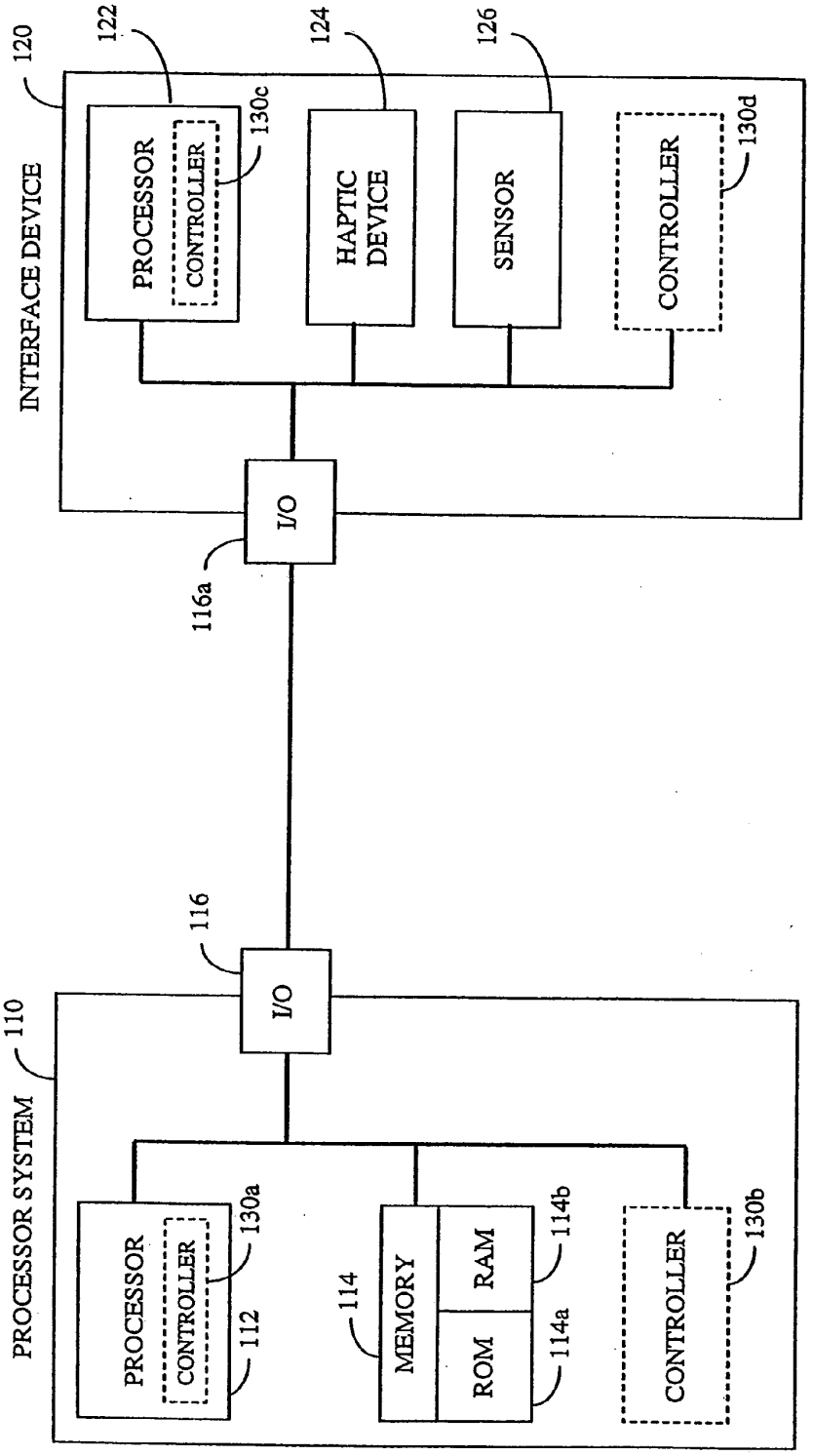
INTERFACE DEVICE
120
PROCESSOR
122
CONTROLLER
130c
HAPTIC DEVICE
124
SENSOR
126
CONTROLLER
130d
I/O
116a
I/O
116
PROCESSOR SYSTEM
110
PROCESSOR
CONTROLLER
130a
112
MEMORY
114
RAM
114b
ROM
114a
CONTROLLER
130b

Fig. 1

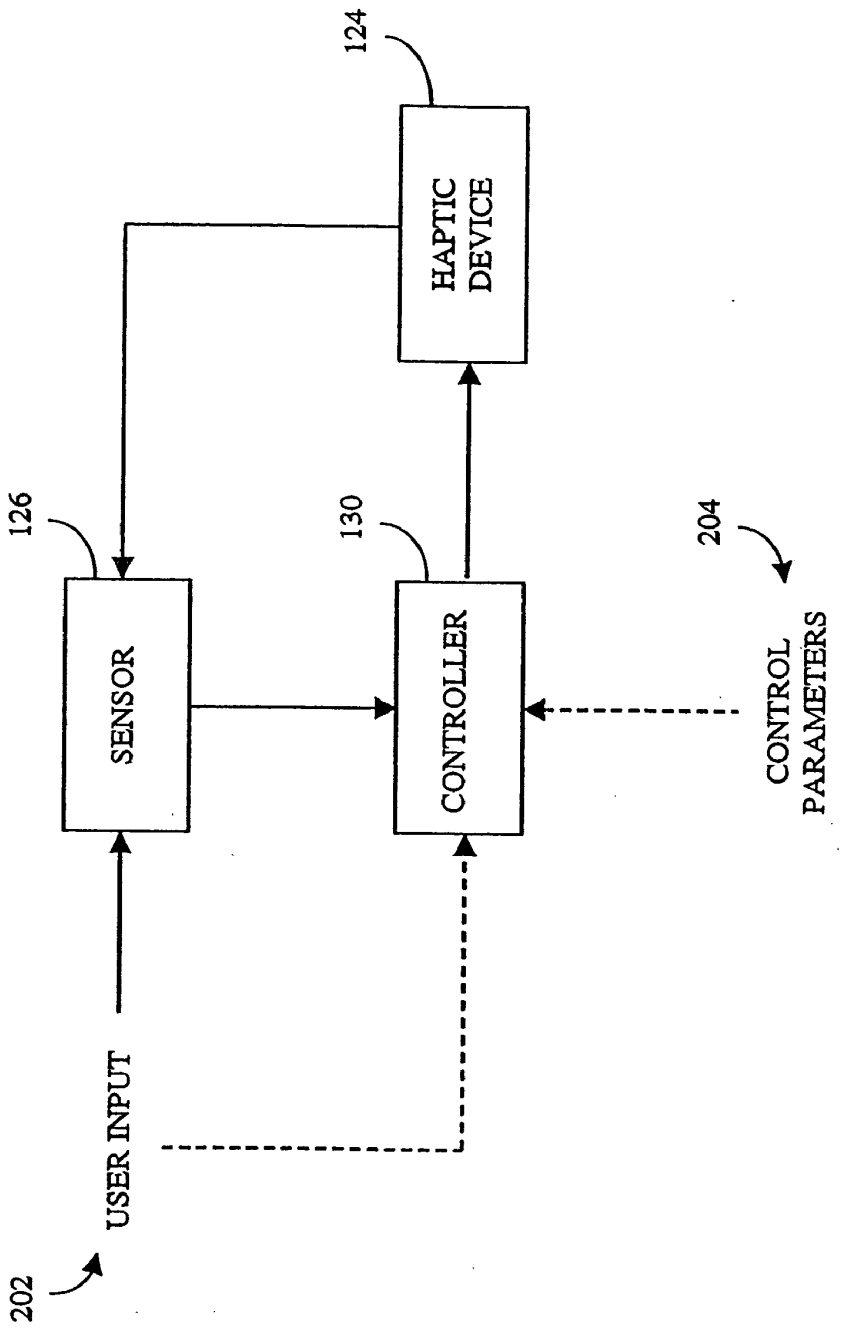
124
HAPTIC DEVICE
126
SENSOR
130
CONTROLLER
204
CONTROL PARAMETERS
USER INPUT
202

Fig. 2

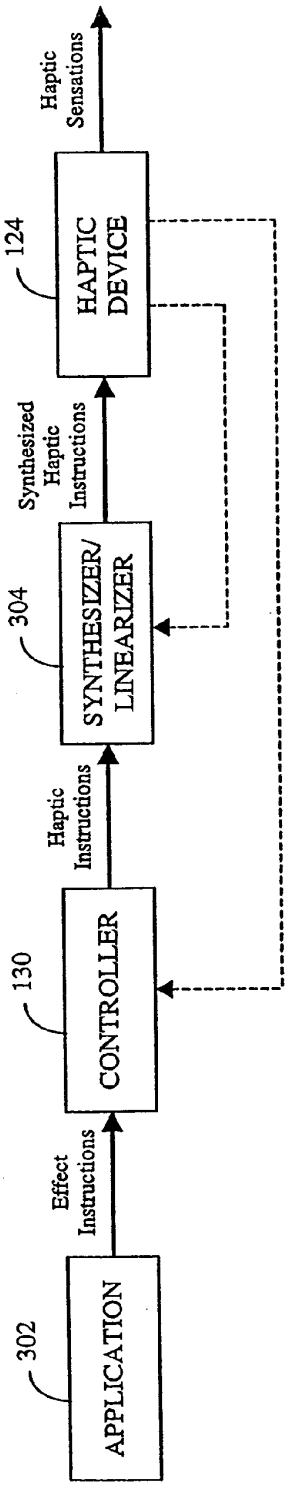
302
APPLICATION
Effect Instructions
130
CONTROLLER
Haptic Instructions
304
SYNTHESIZER/ LINEARIZER
Synthesized Haptic Instructions
124
HAPTIC DEVICE
Haptic Sensations

Fig. 3A

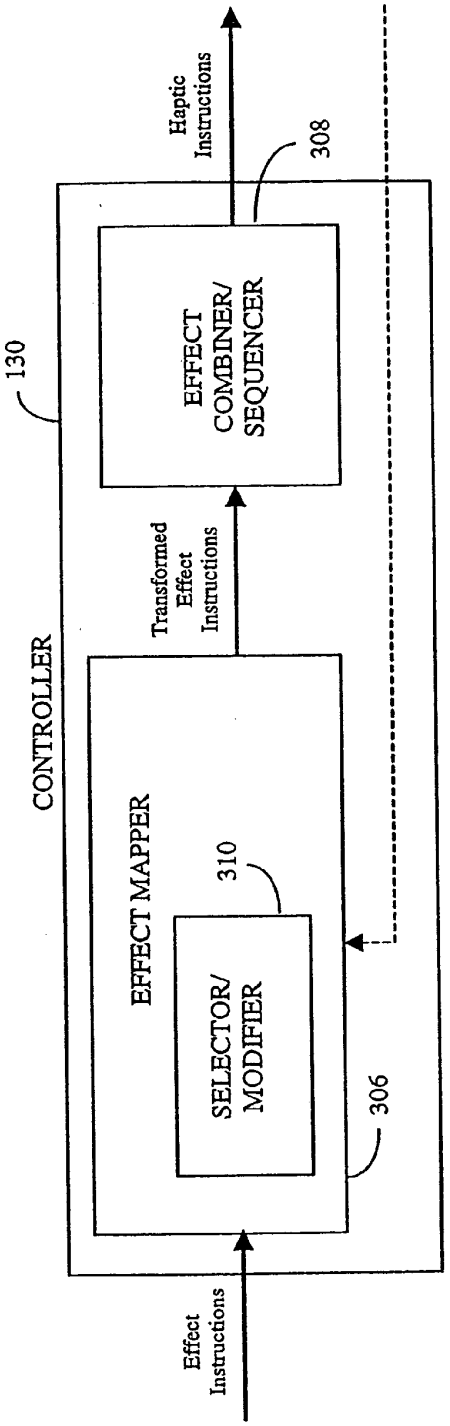
Effect Instructions
130
CONTROLLER
EFFECT MAPPER
310
SELECTOR/ MODIFIER
306
Transformed Effect Instructions
EFFECT COMBINER/ SEQUENCER
308
Haptic Instructions

Fig. 3B

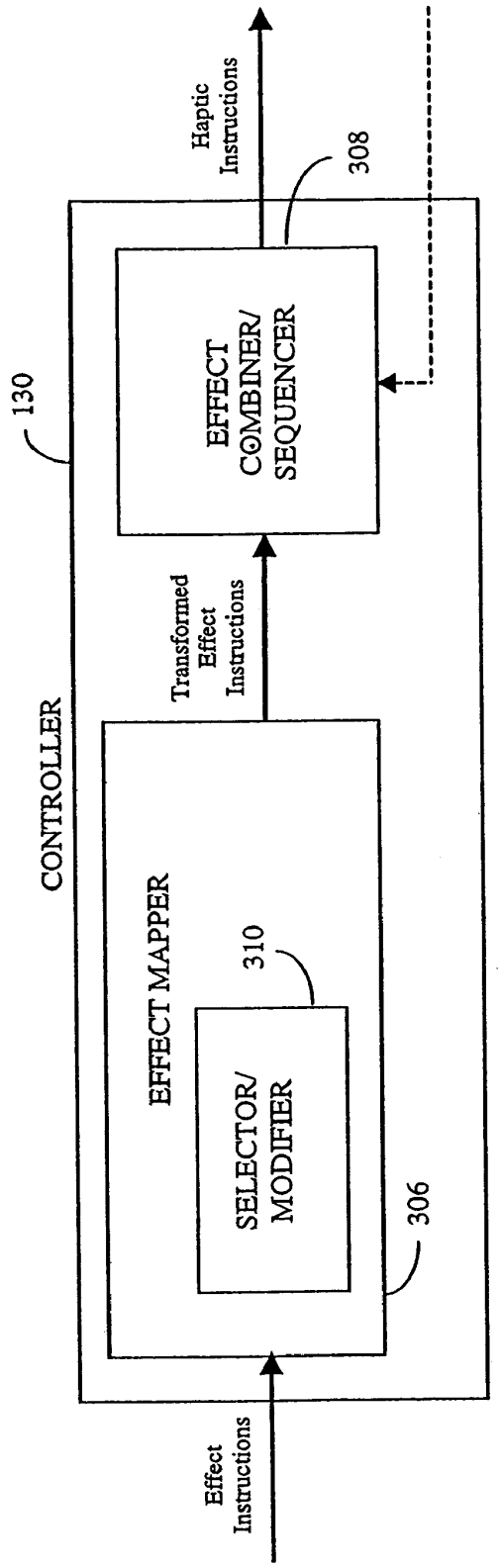
Effect Instructions
CONTROLLER
130
EFFECT MAPPER
SELECTOR/ MODIFIER
310
306
Transformed Effect Instructions
EFFECT COMBINER/ SEQUENCER
308
Haptic Instructions

Fig. 3C

	α	ψ	ω	ϕ	τ	δ	n
α	$i_{\alpha\alpha}$	$i_{\alpha\psi}$	$i_{\alpha\omega}$	$i_{\alpha\phi}$	$i_{\alpha\tau}$	$i_{\alpha\delta}$	$i_{\alpha n}$
ψ	$i_{\psi\alpha}$	$i_{\psi\psi}$	$i_{\psi\omega}$	$i_{\psi\phi}$	$i_{\psi\tau}$	$i_{\psi\delta}$	$i_{\psi n}$
ω	$i_{\omega\alpha}$	$i_{\omega\psi}$	$i_{\omega\omega}$	$i_{\omega\phi}$	$i_{\omega\tau}$	$i_{\omega\delta}$	$i_{\omega n}$
ϕ	$i_{\phi\alpha}$	$i_{\phi\psi}$	$i_{\phi\omega}$	$i_{\phi\phi}$	$i_{\phi\tau}$	$i_{\phi\delta}$	$i_{\phi n}$
τ	$i_{\tau\alpha}$	$i_{\tau\psi}$	$i_{\tau\omega}$	$i_{\tau\phi}$	$i_{\tau\tau}$	$i_{\tau\delta}$	$i_{\tau n}$
δ	$i_{\delta\alpha}$	$i_{\delta\psi}$	$i_{\delta\omega}$	$i_{\delta\phi}$	$i_{\delta\tau}$	$i_{\delta\delta}$	$i_{\delta n}$
n	$i_{n\alpha}$	$i_{n\psi}$	$i_{n\omega}$	$i_{n\phi}$	$i_{n\tau}$	$i_{n\delta}$	i_{nn}
	i_{α}	i_{ψ}	i_{ω}	i_{ϕ}	i_{τ}	i_{δ}	i_{n}

Fig. 4

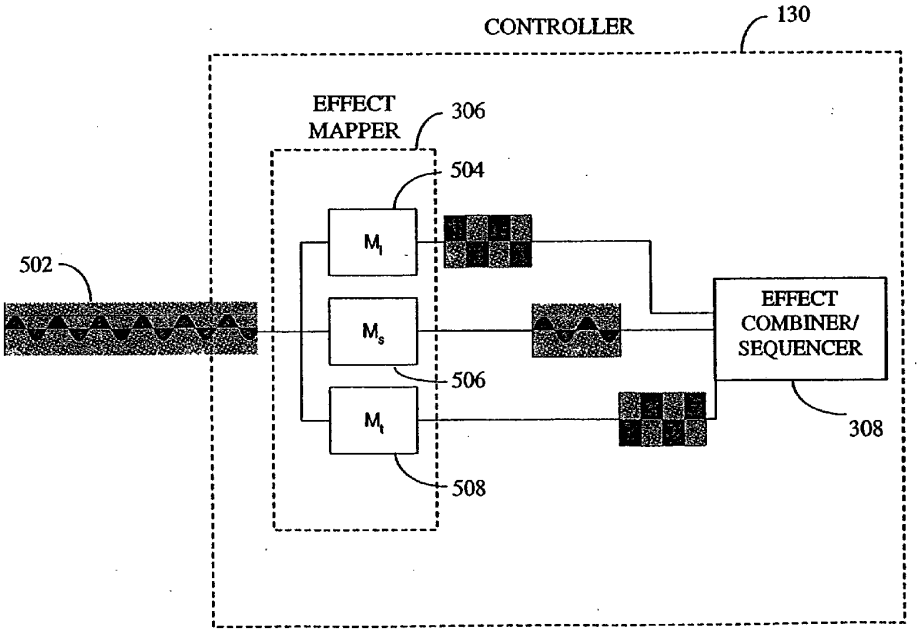

Fig. 5

	α	ψ	ω	ϕ	τ	δ	n
α	2	0	0	0	0	0	0
ψ	0	0	0	0	0	0	0
ω	0	0	1	0	2	0	0
ϕ	0	0	0	1	0	0	0
τ	0	0	0	0	0	0	0
δ	0	0	0	0	0	1	0
n	0	0	0	0	0	0	1
	0	1	0	0	0	0	0

Fig. 6A

	α	ψ	ω	ϕ	τ	δ	n
α	1	0	0	0	0	0	0
ψ	0	1	0	0	0	0	0
ω	0	0	1	0	-4	-2	0
ϕ	0	0	0	1	0	0	0
τ	0	0	0	0	1	0	0
δ	0	0	0	0	0	1	0
n	0	0	0	0	0	0	1
	0	0	0	0	0	0	0

Fig. 6B

	α	ψ	ω	ϕ	τ	δ	n
α	2	0	0	0	0	0	0
ψ	0	0	0	0	0	0	0
ω	0	0	1	0	2	-2	0
ϕ	0	0	0	-1	0	0	0
τ	0	0	0	0	0	1	0
δ	0	0	0	0	0	1	0
n	0	0	0	0	0	0	1
	0	1	0	0	0	0	0

Fig. 6C

	α	ψ	ω	ϕ	τ	δ	n
α	1	0	0	0	0	0	0
ψ	0	0	0	0	0	0	0
ω	0	0	0	0	0	0	0
ϕ	0	0	0	1	0	0	0
τ	0	0	0	0	1	0	0
δ	0	0	0	0	0	1	0
n	0	0	0	0	0	0	1
	0	sin	ω_r	0	0	0	0

Fig. 7

	α	ψ	ω	ϕ	τ	δ	n
α	1	0	0	0	0	0	0
ψ	0	1	0	0	0	0	0
ω	0	0	0	0	0	1	$1/\omega_r$
ϕ	0	0	0	1	0	0	0
τ	0	0	0	0	0	0	0
δ	0	0	0	0	0	0	0
n	0	0	0	0	0	0	0
	0	0	ω_r	0	$4\lambda_r$	$-4\lambda_r$	0

Fig. 8

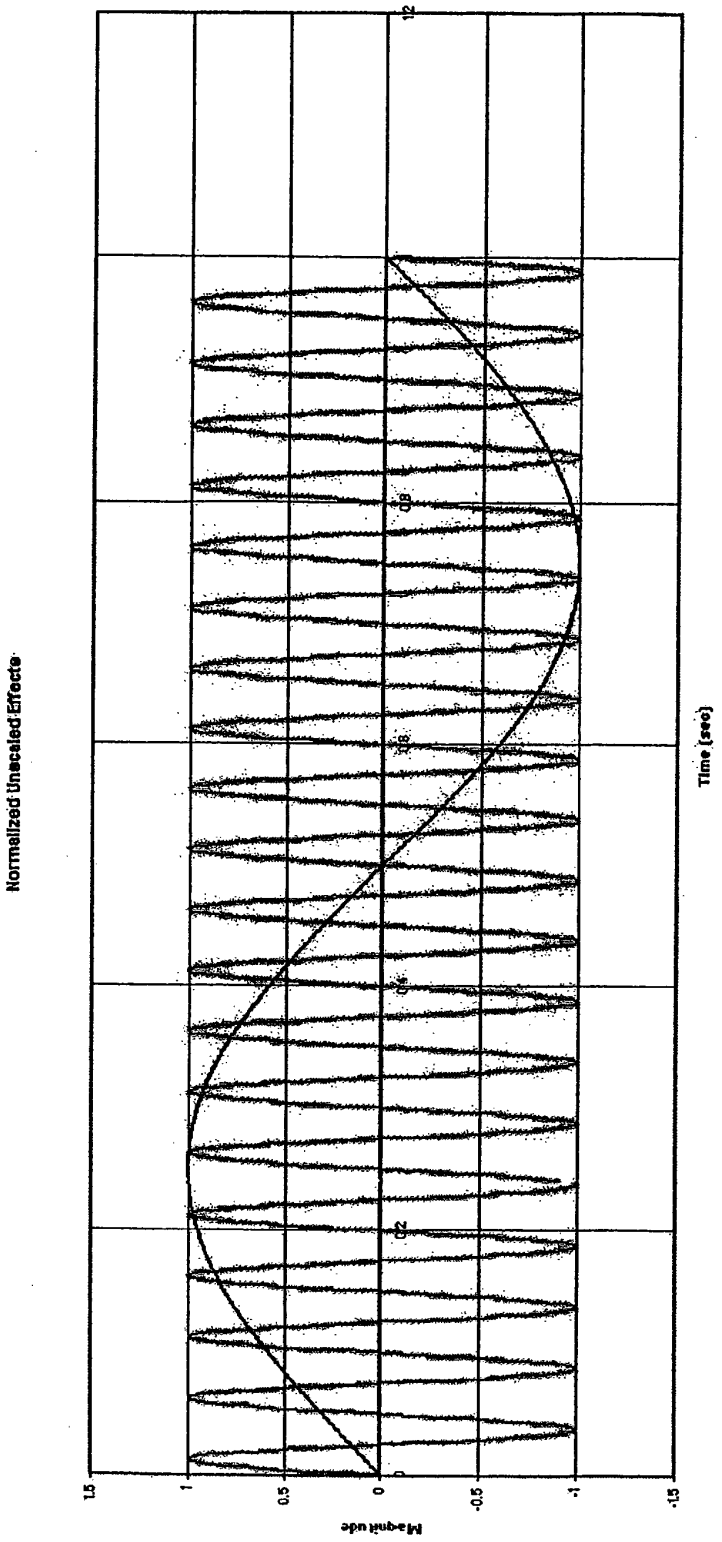
Normalized Unscaled Effects
Magnitude
1.5
1
0.5
0
-0.5
-1
-1.5
0
0.2
0.4
0.6
0.8
1
1.2
Time (sec)

Fig. 9

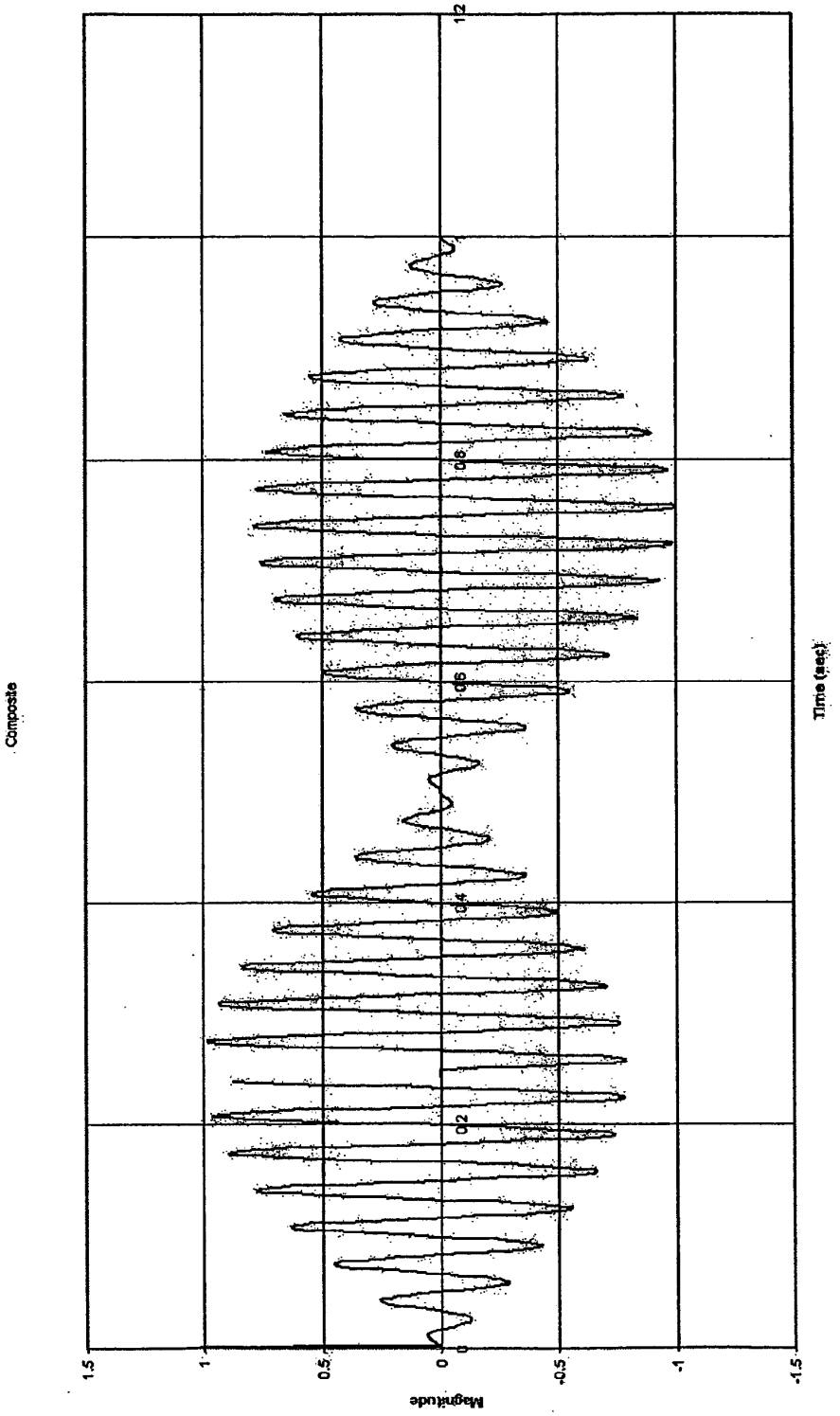

Fig. 10

	α	ψ	ω	φ	τ	δ	η
α	½	0	0	0	0	0	0
ψ	0	1	0	0	0	0	0
ω	0	0	1	0	0	0	0
φ	0	0	0	1	0	0	0
τ	0	0	0	0	1	0	0
δ	0	0	0	0	0	1	0
η	0	0	0	0	0	0	1

Fig. 11A

	α	ψ	ω	φ	τ	δ	η
α	-½	0	0	0	0	0	0
ψ	0	1	0	0	0	0	0
ω	0	0	1	0	0	0	0
φ	0	0	0	1	0	0	0
τ	0	0	0	0	1	0	0
δ	0	0	0	0	0	1	0
η	0	0	0	0	0	0	1

Fig. 11B

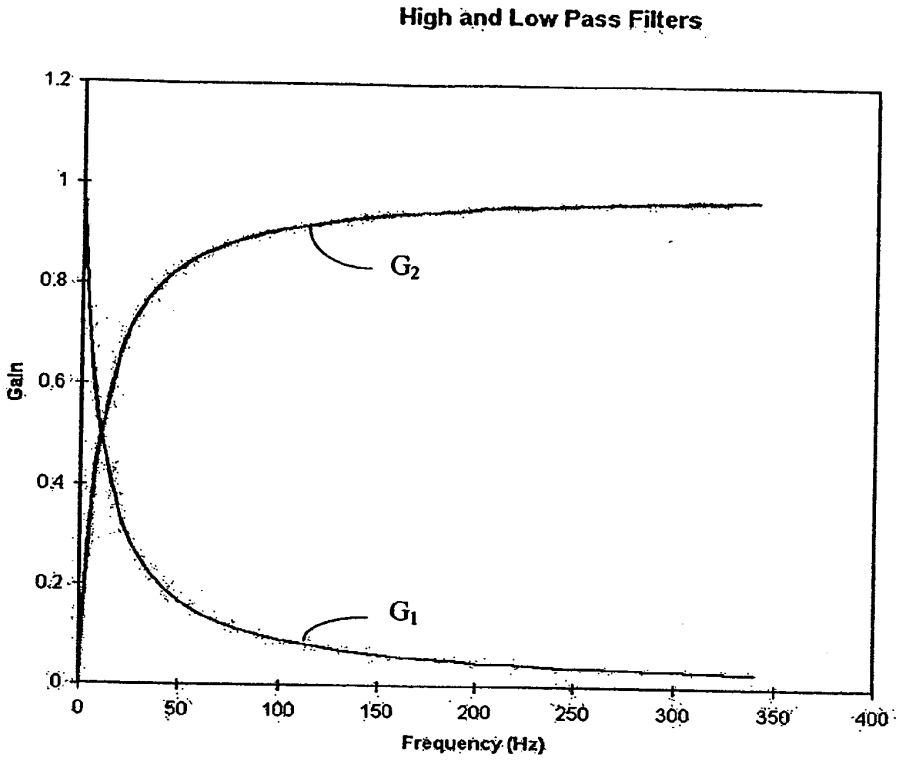

Fig. 12

	α	ψ	ω	ϕ	τ	δ	n
α	1	0	0	0	0	0	0
ψ	0	0	0	0	0	0	0
ω	0	0	0	$\pi/2\omega_r$	0	0	0
ϕ	0	0	0	0	0	0	0
τ	0	0	0	0	1	0	0
δ	0	0	0	0	0	1	0
n	0	0	0	0	0	0	1
	0	1	∞	$\pi/2$	0	0	0

Fig. 13

SYSTEM AND METHOD FOR MAPPING INSTRUCTIONS ASSOCIATED WITH HAPTIC FEEDBACK

CROSS-REFERENCE TO RELATED APPLICATION

[0001] This application claims the benefit under 35 U.S.C. 119(e) of U.S. Provisional Application Ser. No. 60/530,980, entitled "System and Method for Mapping Instructions Associated with Haptic Feedback," filed Dec. 22, 2003, which is incorporated herein by reference in its entirety.

BACKGROUND

[0002] Systems and methods of the invention relate generally to mapping instructions associated with haptic feedback. More specifically, systems and methods of the invention relate to mapping drive signals to haptic sensations.

[0003] Computer users often use interface devices to provide information to a computers or other electronic devices. For example, with such interface devices, a user can interact with an environment displayed by a computer to perform functions and tasks on the computer, such as playing a game, experiencing a simulation or virtual reality environment, using a computer aided design system, operating a graphical user interface (GUI), or otherwise affecting processes or images depicted on an output device of the computer. Common human interface devices for computers or electronic devices include, for example, a joystick, button, mouse, trackball, knob, steering wheel, stylus, tablet, pressure-sensitive ball, remote control, wireless phone, and stereo controls.

[0004] In some interface devices, feedback, such as force feedback, can also be provided to a user. This force feedback can also be referred to as haptic feedback or can be provided in the form of haptic sensations. Each of these interface devices, for example, includes one or more haptic devices, which are connected to a controlling processor, controller, and/or computer. Consequently, by a controlling processor, controller, and/or computer, haptic forces produced by the haptic device can be controlled in coordination with actions of the user and/or events associated with an audible environment, or a graphical or displayed environment by sending control signals or commands to haptic feedback device.

[0005] Multi-mode haptic devices that provide desirable performance have been developed. For example, U.S. application Ser. No. 10/301,809, the entire disclosure of which is incorporated herein by reference, discloses haptic feedback using a device having a rotary harmonic moving mass. Accordingly, additional systems and methods for mapping effects produced by multi-mode haptic devices, as well as single-mode haptic devices, are desirable.

SUMMARY

[0006] An embodiment of the invention provides a system and method for mapping instructions associated with haptic feedback. An apparatus having a controller including an effect mapper is disclosed. The controller is configured to receive effect instructions from at least one application. The effect mapper is configured to produce multiple haptic instructions in response to at least a portion of the received effect instructions. The haptic instructions are at least partially based on a physical characteristic of a haptic device.

[0007] A method is also disclosed that includes receiving an effect instruction and mapping the received effect instruction to at least one haptic instruction based on an effect mapping schema. The mapping is based at least partially on a pre-determined characteristic of a haptic device model. At least one haptic signal is transmitted to a haptic device, and is based on the at least one haptic instruction.

BRIEF DESCRIPTION OF THE DRAWINGS

[0008] **FIG. 1** is a block diagram of a system including a processor system and an interface device, according to an embodiment of the invention.

[0009] **FIG. 2** is a diagram illustrating a haptic device, a controller, and a sensor, according to an embodiment of the invention.

[0010] **FIG. 3A** is a block diagram illustrating a haptic system, according to an embodiment of the invention.

[0011] **FIG. 3B** is a block diagram illustrating the controller shown in **FIG. 3A**, according to an embodiment of the invention.

[0012] **FIG. 3C** is a block diagram illustrating the controller shown in **FIG. 3A**, according to an embodiment of the invention.

[0013] **FIG. 4** is a diagram illustrating a transformation matrix, according to an embodiment of the invention.

[0014] **FIG. 5** is a diagram illustrating transformation of effect instructions, according to an embodiment of the invention.

[0015] **FIG. 6A** is a diagram illustrating an initiation transformation matrix, according to an embodiment of the invention.

[0016] **FIG. 6B** is a diagram illustrating a sustaining transformation matrix, according to an embodiment of the invention.

[0017] **FIG. 6C** is a diagram illustrating a termination transformation matrix, according to an embodiment of the invention.

[0018] **FIG. 7** is a diagram illustrating a wavelet transformation matrix, according to an embodiment of the invention.

[0019] **FIG. 8** is a diagram illustrating a pulse mode transformation matrix, according to an embodiment of the invention.

[0020] **FIG. 9** is a plot showing a desired output frequency and a resonant frequency of a haptic device, according to an embodiment of the invention.

[0021] **FIG. 10** is a plot showing a modulated signal used to drive a haptic device according to an embodiment of the invention.

[0022] **FIG. 11A** is a diagram illustrating a transformation matrix, according to an embodiment of the invention.

[0023] **FIG. 11B** is a diagram illustrating a transformation matrix, according to an embodiment of the invention.

[0024] **FIG. 12** is a plot showing gains associated with blending functions of multiple operational modes, according to an embodiment of the invention.

[0025] **FIG. 13** is a diagram illustrating a transformation matrix associated with a blending according to an embodiment of the invention.

DETAILED DESCRIPTION

[0026] Systems and methods for mapping instructions associated with haptic feedback are described. More specifically, an apparatus having a controller that includes an effect mapper according to an embodiment of the invention is described. The controller is configured to receive effect instructions from at least one application. The effect mapper is configured to produce haptic instructions in response to at least a portion of the received effect instructions. The haptic instructions are at least partially based on a physical characteristic of a haptic device.

[0027] Feedback provided via a haptic device is sometimes referred to as vibrotactile feedback or kinesthetic feedback, and is referred to more generally herein as "haptic feedback." Such haptic feedback can be provided, for example, by way of a haptic device or an interface device including a haptic device. Sensations that can be perceived by a user of a haptic device providing haptic feedback are generally referred to herein as "haptic sensations."

[0028] An "application" is software designed to fulfill specific needs. Such applications can include, for example, gaming software, haptic-device control software, etc., or portions thereof.

[0029] Physical characteristics of a haptic device are measurable features of that haptic device or components of that haptic device. Physical characteristics can include, for example, mass, shape, acceleration, deceleration, resonant frequencies, harmonic modes, frequency response, performance at varying altitudes or orientations, and/or other measurable features of the haptic device.

[0030] An effect instruction is an instruction that is configured to cause a haptic device to output a specific haptic sensation independent of physical characteristics of that haptic device. According to one or more embodiments of the invention, an effect mapper maps received effect instructions to haptic instructions at least partially based on a physical characteristic of a haptic device. Thus, haptic instructions are tailored or modified according to a specific haptic device. When provided to that specific haptic device, these haptic instructions cause the haptic device to output haptic sensations that better replicate the haptic sensations associated with the effect instructions. It should be noted that the term "instructions" as used herein connection with effect instructions and haptic instructions can include, for example, signals, commands, or the like.

[0031] Effect mappings, according to one or more embodiments of the invention, can alter or control effect components or parameters of a haptic sensation, such as amplitude, waveshape, frequency, phase, duration, or delay of the haptic feedback to be output by a haptic device. These effect components or parameters can form a portion of an overall haptic sensation to be output by way of a haptic device, for example, by way of synthesis or other combination. Thus, such haptic feedback components can be output simultaneously or in sequence, for example. In cases where haptic feedback components are synthesized, the frequency of a first component can be modulated by the frequency of a second component, for example. When components are to be output in sequence, individual components can be used to map the start, the middle, and the end of a haptic feedback, for example.

[0032] **FIG. 1** is a block diagram of a system having a processor system and an interface device, according to an embodiment of the invention. The system illustrated in **FIG. 1** includes a processor system **110** in communication with an interface device **120**. The processor system **110** can be, for example, a commercially available personal computer or a less complex computing or processing device that is dedicated to performing one or more specific tasks. For example, the processor system **110** can be a terminal dedicated to providing an interactive virtual reality environment, such as a gaming system, or the like.

[0033] The processor system **110** includes a processor **112**, which according to one or more embodiments of the invention, can be a commercially available microprocessor. Alternatively, the processor **112** can be an application-specific integrated circuit (ASIC) or a combination of ASICs, which is designed to achieve one or more specific functions, or enable one or more specific devices or applications. In yet another alternative, the processor **112** can be a circuit analog or digital, or a combination of multiple circuits.

[0034] Alternatively, the processor **112** can optionally include one or more individual sub-processors or coprocessors. For example, the processor can include a graphics coprocessor that is capable of rendering graphics, a controller that is capable of controlling one or more devices, a sensor that is capable of receiving sensory input from one or more sensing devices, and so forth.

[0035] The processor system **110** also includes a memory component **114**. As shown in **FIG. 1**, the memory component **114** can include one or more types of memory. For example, the memory component **114** can include a read only memory (ROM) component **114***a* and a random access memory (RAM) component **114***b*. The memory component **114** can also include other types of memory not illustrated in **FIG. 1** that are suitable for storing data in a form retrievable by the processor **112**. For example, electronically programmable read only memory (EPROM), erasable electrically programmable read only memory (EEPROM), flash memory, as well as other suitable forms of memory can be included within the memory component **114**. The processor system **110** can also include a variety of other components, depending upon the desired functionality of the processor system **110**.

[0036] The processor **112** is in communication with the memory component **114**, and can store data in the memory component **114** or retrieve data previously stored in the memory component **114**. The components of the processor system **110** can communicate with devices external to the processor system **110** by way of an input/output (I/O) component **116**.

[0037] According one or more embodiments of the invention, the I/O component **116** can include a variety of suitable communication interfaces. For example, the I/O component **116** can include wired connections, such as standard serial ports, parallel ports, universal serial bus (USB) ports, S-video ports, large area network (LAN) ports, small computer system interface (SCSI) ports, and so forth. Addition-

ally, the I/O component **116** can include, for example, wireless connections, such as infrared ports, optical ports, Bluetooth wireless ports, wireless LAN ports, or the like.

[**0038**] By way of the I/O component **116**, the processor system **110** can communicate with other devices, such as interface devices **120**. These interface devices **120** can be configured to provide haptic feedback. Each interface device **120** can communicate with the processor system **110** by way of an I/O component **116***a*, which is similar to the I/O component **116** of the processor system **110** and can include any of the wired or wireless communications ports described above in connection with that I/O component **116**. Thus, the communications link between the I/O component **116** of the processor system **110** and the I/O component **116***a* of the interface device **120** can take a variety of forms, including, for example, wired communications links, wireless communications links (e.g., RF links), optical communications links, or other suitable links.

[**0039**] The interface device **120** includes a number of components, such as a processor **122**, a haptic device **124**, and a sensor **126**. As with the components of the processor system **110**, the interface device **120** can include additional components. For example, the interface device can include additional duplicates of the components shown in **FIG. 1**. Additionally, the interface device **120** can include other components not shown in the figure. For example, where it is desirable to store data received by the interface device **120** via I/O component **116***a*, a suitable memory component or buffer memory component can be used.

[**0040**] The processor **122** of the interface device **120**, can be similar to the processor **112** of the processor system **110**, described above, or can be specifically designed (e.g., an ASIC) and/or programmed for the functionality of the interface device **120**. As with the processor **112** of the processor system **110**, the processor **122** of the interface device **120**, can include a variety of sub-processors, which can, for example, be used in parallel.

[**0041**] As discussed above, the interface device **120** includes a haptic device **124**, which is used to provide tactile or haptic feedback to a user of the interface device **120**. According to an embodiment of the invention, haptic feedback can be provided by way of a physical object, such as a housing, a manipulandum, or the like. The haptic device **124** can take a variety of forms, including one or more haptic devices that each have multiple operational modes associated with multiple corresponding frequency ranges. Some examples of haptic device **124** configurations that can be used in accordance with one or more embodiments of the invention will be described in greater detail below. The examples of haptic devices **124** given below, however, are not intended to form an exhaustive list of all types of haptic devices **124** that can be included in the interface device **120** but are intended instead as examples only.

[**0042**] For example, the haptic device **124** can be a harmonic (e.g., multi-mode) haptic device or a non-harmonic (e.g., single mode) haptic device. Harmonic haptic devices **124** have more than one operational mode, while non-harmonic haptic devices **124** can have, for example, only one operational mode. The operational mode associated with non-harmonic haptic devices, as well as with harmonic haptic devices operating in a single operational mode is termed the "unidirectional" operational mode. Harmonic haptic devices also have a "harmonic" operational mode, which corresponds to operation that use harmonics of the physical elements within the haptic device **124**. For example, in cases where the haptic device **124** uses a rotational mass to provide vibrotactile haptic feedback, a spring and mass system, which has more than one harmonic mode, can be used in more than one corresponding operational mode.

[**0043**] The sensor **126** of the interface device **120** is configured to sense input from a user of the interface device **120**. For example, the sensor **126** can be used to sense manipulation or movement of a physical object, such as a manipulandum, of the interface device **120**. The sensor **126** can also be used to sense other forms of user input, such as pressure, speed, acceleration, torque, light, or other measurable quantities. For example, the sensor **126** can incorporate a piezoelectric sensor to sense pressure, an inertial measurement unit (IMU), such as an accelerometer, to sense various forms of motion, a photovoltaic sensor to sense changes in light levels, and/or other sensors.

[**0044**] As shown in **FIG. 1**, the various components of the interface device **120** are in communication with one another and with the components of the processor system **110** (via the I/O components **116**, **116***a*). The processor **122** of the interface device **120**, for example, can be used to control the haptic device **124** based on information received from the sensor **126**. Similarly, the processor **112** of the processor system **110** can be used to control the haptic device **124** of the interface device **120** based on information received from the sensor **126** of the interface device **120**; in such an embodiment, the processor **122** need not be present. Alternatively, the processor **112** of the processor system **110** (also referred to as a "host processor") can be used in coordination with the processor **122** of the interface device **120** (also referred to as a "local processor") both to interpret data received from the sensor **126** and to control the haptic device **124**.

[**0045**] The processor system **110** and the interface device **120** can optionally use one or more controllers **130***a*, **130***b*, **130***c*, **130***d* (which can be referred to hereinafter as a controller **130**, collectively, individually, or as a subset). As shown in **FIG. 1**, a controller or control method **130** can exist within the processor **112** of the processor system **110** and/or the processor **122** of the interface device **120**. Additionally, a controller **130** can be a separate component connected to the other components of the processor system **110** and/or the interface device **120** via a bus or other suitable connection.

[**0046**] **FIG. 2** is a diagram illustrating a haptic device controller, and a sensor, according to an embodiment of the invention. **FIG. 2** also shows different data values provided to the system.

[**0047**] As shown in **FIG. 2**, user input **202** is provided (e.g., via the user interface device **120** shown in **FIG. 1**), and is received by the sensor **126**. The user input **202** can also optionally be provided to a controller **130** (e.g., by way of the sensor **126**, or some other devices configured to accept and convey user input). The sensor **126** also receives information from the haptic device **124**. For example, the sensor **126** can sense the actual movements of the haptic device **124**, thereby sensing the tactile or haptic feedback output by the haptic device **124**.

[0048] According to an arrangement of the system shown in **FIG. 2**, the controller **130** receives data from the sensor **126** (shown by a solid line), and optionally receives user input **202** and control parameters **204** (shown by dotted lines). Based on the data from the sensor **126**, and any received optional user input **202** and control parameters **204**, the controller **130** controls the tactile output or haptic feedback of the haptic device **124**. This is accomplished by a control signal that the controller **130** outputs to the haptic device **124**. The control signal can be based on a number of parameters, including, for example, control parameters **204**. Additionally, control parameters **204** and other parameters that are used by the controller **130** to control the haptic device **124** can be stored in the memory component **114** of the processor system **110**, or by another suitable memory component (e.g., a memory component of the interface device **120**).

[0049] **FIG. 3A** is a block diagram illustrating a haptic system, according to an embodiment of the invention. More specifically, **FIG. 3A** illustrates various elements of a haptic device used to generate haptic sensations.

[0050] As shown in **FIG. 3A**, an application **302** that can run on a processor system (e.g., the processor system **110** shown in **FIG. 1**) or an interface device (e.g., the interface device **120** shown in **FIG. 1**, is provided). The application **302** communicates effect instructions to a controller **130**. The controller **130**, in turn, provides haptic instructions to a synthesizer/linearizer **304**, which may be either a synthesizer or a linearizer, or a combination of both (referred to herein as "synthesizer/linearizer"). The synthesizer/linearizer **304** receives the haptic instructions and provides synthesized haptic signals to a haptic device **124**. Upon receiving synthesized haptic signals from the synthesizer/linearizer **304**, the haptic device **124** produces haptic sensations that a user can perceive via an interface device **120**.

[0051] Information can optionally be provided to the controller **130** and/or the synthesizer/linearizer **304** from the haptic device **124** in the form of one or more feedback signals (shown by dotted lines in **FIG. 3A**). In cases where feedback is provided to the controller **130**, modified haptic instructions are provided from the controller **130** to the synthesizer/linearizer **304**, and modified synthesized haptic signals are provided by the synthesizer/linearizer **304** to the haptic device **124**. Alternatively, in the case where feedback is provided from the haptic device **124** to the synthesizer/linearizer **304**, the synthesizer/linearizer **304** provides modified synthesized haptic signals to the haptic device.

[0052] The physical location of the various elements shown in **FIG. 3A** can be varied. For example, the application **302**, the controller **130**, the synthesizer/linearizer **304**, and the haptic device **124** can all be collocated within an interface device **120**, according to one or more embodiments of the invention. Alternatively, any combination of the components shown in **FIG. 3A**, with the exception of the haptic device **124** can form part of the processor system **110**, which is in communication with the interface device **120**, which includes the haptic device **124**.

[0053] When the application **302**, the controller **130**, and the synthesizer/linearizer **304** are collocated on the same device, the architecture can be referred to as an "embedded control system." Such an architecture can be used, for example, in cellular telephones, personal digital assistants (PDAs), and other handheld devices. When the application **302**, the controller **130**, and the synthesizer/linearizer **304** are not collocated, the architecture of the system is a "distributed architecture system." A distributed architecture system can be used, for example, in gaming systems, personal computing systems, and other systems that use peripheral or external interface devices **120** to access functionality of a central processor system **110**. Alternatively, when the controller **130** is located within a processor system **110**, and the synthesizer/linearizer **304** is located within a remote interface device **120**, the architecture of the system can be referred to as a "hybrid architecture system." Alternatively, when the application **302**, the controller **130**, and the synthesizer/linearizer **304** are not collocated in the same device that houses the haptic device **124**, the architecture of the system can be referred to as a "force-streaming architecture system."

[0054] **FIGS. 3B and 3C** illustrate the controller **130** in greater detail, according to one or more embodiments of the invention. The configuration illustrated in **FIGS. 3B and 3C** differ only in which component within the controller **130** receives optional feedback from the haptic device **124**.

[0055] The controller **130** can use a variety of suitable techniques to convert effect instructions to haptic instructions. For example, various duty-cycle-related control methods for controlling a multi-mode haptic device can be used to determine appropriate drive signals applied to the haptic device **124**. A description of duty-cycle-related control methods that can be used according to one or more embodiments of the invention can be found in U.S. application Ser. Nos. 09/669,029 and 09/675,995, the disclosures of which are incorporated herein by reference.

[0056] Multiple blending, effect switching, and/or selection algorithms can be implemented by way of the controller **130**. For example, methods for controlling haptic devices having multiple operational modes are described in U.S. Application No. [Attorney Docket No. IMMR-093/00US] entitled System and Method for Controlling Haptic Devices Having Multiple Operational Modes, the entire disclosure of which is incorporated herein by reference in its entirety. Additionally, other suitable techniques can be implemented by way of the controller, such as envelope modulation, a sum-of-products technique, and time domain filtering. The sum-of-products techniques use a weighting factor, which can be applied to effect instructions by either the multiplication of effect amplitudes. Effects can also be gated to produce additional effects.

[0057] The controller **130** can also use a switching technique to switch between different frequency ranges. A switching technique can use various parameters, such as the period of a desired haptic sensation to control the output of the haptic device **124**. Long periods (i.e., low frequencies) of desired haptic sensations that are below a threshold frequency can use a pulse mode mapping technique, such as techniques using a pulse mode transformation matrix (e.g., the matrix described below in connection with **FIG. 8**). Desired haptic sensations having periods within a middle range (i.e., middle range frequencies), for example within about 20 to 30 Hz, can be mapped using direct current (DC) mapping used with single-mode haptic devices **124**. Desired haptic sensations having shorter periods (i.e., higher fre-

quencies) can use direct mapping to produce the haptic instructions from the received effect instructions, according to one or more embodiments of the invention.

[0058] The controller **130** can perform different operations on received effect instructions based upon the frequencies of the effect instructions and/or the frequencies of the desired haptic sensations to be output from the haptic device **124**. According to one or more embodiments of the invention that operate on effect instructions based on their frequency ranges, several frequency ranges can be defined, each defined frequency range having different mapping techniques. Examples of frequency ranges that can be used in mapping effect instructions for a multi-mode haptic device **124** can include, for example, a low-frequency range (e.g., below about 20 Hz), a unidirectional frequency range (e.g., between about 20 to 30 Hz), a transitional frequency range above the unidirectional frequency range, but below a harmonic/resonant frequency range of the haptic device, a harmonic/resonant frequency range (i.e., a range of frequencies surrounding the harmonic/resonant frequency), a high-frequency range above the harmonic/resonant frequency of the haptic device **124**.

[0059] The controller **130** includes an effect mapper **306** and an effect combiner/effect sequencer **308**, which can include a combiner alone, a sequencer alone, or a combination of both (collectively referred to herein as an "effect combiner/sequencer"). The effect mapper includes a selector/modifier **310**, which can include a selector alone, a modifier alone, or a combination of both (collectively referred to herein as a "selector/modifier"). The selector/modifier **310** can be used to gate and/or modify the received effect instructions to cause the controller **130** to properly render haptic instructions. Where used herein, the term "modify" includes various ways of modifying such as, for example, modulating.

[0060] The effect mapper **306** of the controller **130** receives effect instructions from the application **302**. Based upon one or more predetermined mapping techniques, the effect mapper **306** maps the received effect instructions to produce haptic instructions. The mapping of effects can be accomplished in a variety of ways, several of which will be described in greater detail below. By way of one or more effect mapping techniques, the effect mapper **306** changes the form of the received effect instructions to provide transformed effect instructions to the effect combiner/sequencer **308**. These transformed effect instructions are configured to cause the controller **130** to output haptic instructions configured to render a desired haptic effect (i.e., output a desired haptic sensation) via the haptic device **124**.

[0061] According to one or more embodiments of the invention, the effect mapper **306** can use effect-blending techniques to blend multiple received effect instructions over one or more frequency ranges of the haptic device **124**. Using effect-blending techniques, the effect mapper **306** can generate multiple effects, each of the multiple effects being optimized for one or more frequency ranges of the haptic device **124**. Some effect blending techniques can be implemented by the effect mapper **306** applying a gain term to the amplitude of the effects within the effect instructions that depend on frequency. By applying such a gain term, effect instructions that are optimized for one or more of the operational frequency ranges of the haptic device **124** can be transformed in such a manner that they smoothly blend as a function of frequency over all or most of the operational frequency ranges of the haptic device **124**. Thus, effect instructions that are optimized for a unidirectional operational mode, for example, can be smoothly blended up to and including frequency ranges surrounding a harmonic/resonant frequency of the haptic device **124**.

[0062] The effect combiner/sequencer **308** receives transformed effect instructions from the effect mapper **306** and gates the haptic instructions output to the synthesizer/linearizer **304**, or example, based on selection criteria. Selection criteria used by the effect combiner/sequencer **308** can include, for example, a start time of an effect, effect decimation, or other suitable criteria. Such gating saves synthesizer and/or processor resources. The effect combiner/sequencer **308** can also combine effects where appropriate. For example, according to one or more embodiments of the invention, multiple effects can be combined via the effect combiner/sequencer **308** using techniques such as summation, multiplication, convolution, or other suitable combining technique. Additionally, the effect combiner/sequencer **308** can modify haptic instructions received from the effect mapper 306 in other ways. For example, the effect combiner/sequencer **308** can normalize amplitudes of haptic sensations intended to be produced in response to haptic instructions provided to the synthesizer/linearizer **304**.

[0063] The effect combiner/sequencer **308** can perform normalization by way of a variety of techniques. For example, normalization can be performed on effect instructions or transformed effect instructions that have amplitudes exceeding 100% (i.e., that exceed the maximum possible amplitude) that either the synthesizer/linearizer **304** can render, or the haptic device **124** can output in the form of haptic sensations. In performing such normalization, all of the effects defined in the effect instructions or transformed effect instructions can be modified (e.g., amplitudes can be reduced) proportionally. According to one or more embodiments of the invention, normalized amplitudes α_{i_norm} can be determined as shown below in Equation 1.

$$\alpha_{i_norm} = \frac{\alpha_i}{\left(\sum_{j=1}^{n} \alpha_j\right)} \tag{1}$$

[0064] In Equation 1 above, the normalized amplitudes α_{i_norm} are determined by normalizing each amplitude α_i in the received effect instructions by the total of the amplitudes in the received effect instructions (shown by the summation in the denominator of the quotient in Equation 1).

[0065] This normalized amplitude applies to the net effect instructions or transformed effect instructions, such that any possible combination of effects does not saturate the synthesizer/linearizer **304**, or overload the haptic device **124**. The remaining effects, or composite of effects $f_{composite}$, can be scaled using the normalization amplitude α_{i_norm}, as shown below in Equation 2.

$$f_{composite}(t) = \alpha_{i_norm} \sum_i f_i(t) \quad (2)$$

[0066] As shown in **FIG. 3B**, feedback signals may optionally be provided from the haptic device **124** to the effect mapper **306**. By way of this optional feedback loop, characteristics of the haptic device **124** can be provided to the effect mapper **306**. These characteristics can include, for example, physical characteristics of the haptic device **124**. The effect mapper **306** can use these physical characteristics, along with optional additional parameters, to modify the effect instructions received from the application **302**. Thus, effect instructions that are received from the application **302**, which may have difficulty producing the desired sensation on the haptic device **124** because of physical characteristics of that haptic device **124**, can be modified by the effect mapper **306** in such a manner to produce the desired haptic sensation via the haptic device **124**. In other words, the effect mapper **306** can improve or tailor haptic instructions based on the received effect instructions and physical characteristics of the device.

[0067] Similarly, in **FIG. 3C**, an optional feedback signal is provided from the haptic device **124** to the effect combiner/sequencer **308**. By way of this optional feedback loop, the effect combiner/sequencer **308** can modify haptic instructions received from the effect mapper **306** in such a manner to produce a desired haptic sensation via the haptic device **124**. As with the feedback signal described above in connection with **FIG. 3B**, optional feedback provided to the effect combiner/sequencer **308** can be based on physical characteristics of the haptic device **124**. The effect combiner/sequencer **308** can use optional feedback, either alone or along with other parameters, to modify the haptic instructions provided to the synthesizer/linearizer **304** in such a manner to output a desired haptic sensation via the haptic device **124**. For example, haptic instructions output by the effect mapper **306** could be normalized by the effect combiner/sequencer **308** according to one or more specific physical characteristics of the haptic device **124** in such a manner that the haptic device **124** can output a desired haptic sensation.

[0068] Returning to **FIG. 3A**, the synthesizer/linearizer **304** can, according to one or more embodiments of the invention, translate the haptic instructions into synthesized haptic instructions in substantially real-time. These synthesized haptic instructions can be accepted as input into the haptic device **124** directly, or by way of an amplifier or other component (not shown in **FIG. 3A**) used to facilitate the operation of the haptic device **124**. The synthesizer/linearizer **304** can also modify the haptic instructions according to a variety of parameters, such as an angle of the rotation of an actuator (e.g., a motor), rotational velocity of an actuator, or other suitable parameters. The velocity and/or dependencies on the angle of rotation of an actuator can be included as part of the effect vectors provided in the effect instructions from the application **302** and/or the haptic instructions from the controller **130**. Additionally, according to one or more embodiments of the invention, the velocity and/or angle of rotation, as well as other parameters, can be provided as a feedback signal from the haptic device **124** itself via a feedback loop (shown using a dotted line in **FIG. 3A**).

[0069] The synthesizer/linearizer **304** is also responsible for linearization compensation. In accordance with one or more embodiments of the invention, the synthesizer/linearizer **304** provides linearization compensation by amplitude mapping to compensate for non-linear characteristics of any amplifiers within the system shown in **FIG. 3A**. In accordance with one or more alternative embodiments of the invention, the synthesizer/linearizer **304** provides linearization compensation to compensate for non-linear performance of the haptic device **124**. Such non-linear performance can be caused, for example, by motor inductance of a motor or other actuator of the haptic device **124** such that the mechanical output of the system is linearized relative to the input command.

[0070] The synthesizer/linearizer **304** can transform the haptic instructions received from the controller **130** to create synthesized haptic instructions that are angularly dependent on amplitude. That is, the synthesized haptic instructions provided by the synthesizer/linearizer **304** can create an effect that takes advantage of angular characteristics of the haptic device **124**, or of an actuator of the haptic device **124**. This angular dependence can be used advantageously by one or more techniques, including, for example, peak angular efficiency techniques, ripple torque compensation techniques, and/or force vectoring techniques. The peak angular efficiency techniques and/or the ripple torque compensation techniques can be implemented either within the controller **130**, or within the synthesizer/linearizer **304**, depending upon desired performance of the system. Force vectoring can be implemented, for example, as an additional effect vector parameter, either by the effect mapper **306** or the effect combiner/sequencer **308** of the controller, or by the synthesizer/linearizer **304**.

[0071] Peak angular efficiency techniques can account for physical characteristics of the haptic device **124**. Specifically, in embodiments using a rotating mass haptic device **124**, peak angles of rotation can occur, for example, where the rotor winding and the magnet of the motor are aligned. Using feedback signals from the haptic device **124**, position feedback can be provided to allow either the controller **130** or the synthesizer/linearizer **304** to servo-control the haptic device's angle of rotation. Such servo control can cause the haptic device **124**, for example, to operate in a harmonic mode at its peak efficiency. Using peak angular efficiency techniques can allow less expensive motors to be used (e.g., high-ripple-torque motors, etc.) and/or higher outputs to be generated. Additionally, because power consumption is reduced, battery life can be extended, and/or energy costs can otherwise be reduced.

[0072] Ripple torque compensation techniques compensate for ripple torque that may be present during operation of the haptic device **124**. Ripple torque compensation techniques can, according to one or more embodiments of the invention, configure compensation that is specific to each haptic device **124** used within the system. For example, a compensation table can be developed for each motor, which optimally minimizes ripple torque at various frequencies over which the haptic device **124** is driven. Ripple torque compensation can be used, for example, in conjunction with velocity feedback, or other feedback signals provided from the haptic device **124** to the controller **130** or the synthesizer/linearizer **304**. A ripple torque compensation technique can,

for example, model the haptic device **124** (e.g., motor and mass) as a second-order system, and minimize accelerations under constant load.

[**0073**] Force vectoring techniques can be used to control a haptic device **124**, such as a multi-mode haptic device. Force vectoring can advantageously control the haptic device **124** in such a manner that when the motor or actuator of the haptic device **124** is asymmetrically supported. Additionally, frequency and magnitude of the haptic sensations output by the haptic device **124** can be controlled, for example, by servo-controlling the motor or actuator to an angle of rotation with angular stiffness characteristics that uniquely determine the resonant mode or frequency of the motor or actuator system of the haptic device **124**. According to one or more embodiments of the invention, force-vectoring techniques can also use feedback provided by the haptic device **124** to provide information about regarding the haptic device **124** (e.g., physical characteristics, etc.) on a once-per-revolution basis, for example. The controller **130** or the synthesizer/linearizer **304** can use this information to optimally compensation for or use the gravity vector acting on the haptic device **124**.

[**0074**] Force vectoring techniques can be implemented either with a feedback control loop, or without a feedback loop. For example, an element, which is similar to the time domain phase element ϕ, can be included as an element within a force vector described in the effect instructions received by the controller **130** or the haptic instructions provided by the controller **130**. The format of force vectors is discussed in greater detail below in connection with Equation 5.

[**0075**] Additionally, or alternatively, to the techniques described above, position and/or velocity feedback techniques can also be used. For either position feedback techniques or velocity feedback techniques, the position of an actuator of the haptic device **124** is provided via a feedback loop to the synthesizer/linearizer **304** and/or the controller **130**. Velocity feedback techniques can, for example, measure the time rate of change of position (e.g., the first derivative of position) to determine the velocity of the actuator of the haptic device **124**. This velocity information can be used by the synthesizer/linearizer **304** as a gain term that is applied to the output signal of the synthesizer to create modified synthesized haptic instructions. The rotational velocity of a rotating mass within a rotating mass haptic device **124** can be controlled, for example, by these modified synthesized haptic instructions.

[**0076**] A velocity feedback technique can also use the difference between the period element of effect vectors within the haptic instructions received by the synthesizer/linearizer **304** and the actual period measured by the velocity feedback control loop from the haptic device **124**. The difference between the two periods can be applied as a gain term to the synthesized haptic instructions to produce modified synthesized haptic instructions. This gain term can be either positive or negative, depending upon the difference between the two periods. The modified synthesized haptic instructions minimize the error between the period of the effect vectors received by the synthesizer/linearizer **304** and the actual period of effects, or haptic sensations, output by the haptic device **124**.

[**0077**] According to one or more embodiments of the invention, the effect mapper **306** maps effect instructions received from the application **302** to create haptic instructions configured to produce a desired haptic sensation via the haptic device **124**, using or more transformational matrices. Such transformational matrices can be configured transform effect instructions received from the application **302**. According to one or more of the embodiments of the invention, multiple effect matrices can be provided where each effect matrix generates a single, transformed effect instruction. In transformational matrix implementation, operation by a single matrix on a received effect instruction would constitute a scaler multiplication of the received effect instruction. Alternatively, where two or more transformational matrices are used to produce multiple transformed effect instructions, each received effect instruction can be multiplied by two or more matrices, the result of which is a non-scaler product. Operations involving products of multiple matrices can be referred to as modulation, as the transformed effect that is achieved by multiplying each received effect instruction with a first matrix is then multiplied, or "modulated," by the second transformation matrix. If the first transformation matrix is a scaler quantity, and the second transformation matrix is a vector quantity, the scaler transformation matrix essentially amplitude modulates the product achieved by the vector matrix. As a practical matter the matrix operations need not be explicitly used, rather the operations may be reduced to arithmetic operations.

[**0078**] Transformation matrices can be formed such that effects are defined on each row of the matrix, and each column of the matrix corresponds to various parameters of each effect. Examples of parameters that may be defined in the columns of a transformation matrix include, for example, amplitude, waveshape, frequency, phase, duration, and/or delay. For example, a matrix having dimensions M×N includes M effects each capable of modifying N parameters.

[**0079**] In cases where the parameters of each effect found in a transformation matrix include amplitude, waveform, frequency, phase, duration and delay, the generalized form of the effect is shown below in Equation 3.

$$\alpha \cdot \psi\left(\frac{2\pi t}{T} + \phi\right) \cdot [U(t-\delta) - U(t-\tau-\delta)] \tag{3}$$

[**0080**] In Equation 3 above, α is the amplitude, ψ is the type of the periodic function (e.g., sinusoid, square-wave, saw-tooth wave, etc.), T is the period, ϕ is the phase, τ is the duration of the effect, and δ is the start delay. The period T relates to the frequency of the effect ω in the manner shown below in Equation 4.

$$T = \frac{2\pi}{\omega} \leftrightarrow \omega = \frac{2\pi}{T} \tag{4}$$

[**0081**] Thus, each effect would be defined by unique parameters corresponding to that effect, as shown below in Table 1.

TABLE 1

Effect 1 →	α_1	ψ_1	ω_1	Φ_1	τ_1	δ_1	n_1
Effect 2 →	α_2	ψ_2	ω_2	Φ_2	τ_2	δ_2	n_2
Effect 3 →	α_3	ψ_3	ω_3	Φ_3	τ_3	δ_3	n_3
.			.			.	
.			.			.	
.			.			.	
Effect m →	α_m	ψ_m	ω_m	Φ_m	τ_m	δ_m	n_m

[0082] The variables of each effect shown above correspond to the variables shown in Equation 3 above, each variable having a subscript that corresponds to its effect. The additional variable n is the number of repetitions for the given effect (i.e., the number of times the effect is to be repeated).

[0083] Each of the effects listed above can be expressed in the form of an effect vector, as shown below in Equation 5.

$$\epsilon_m=\{\alpha_m,\psi_m, \omega_m, \phi_1,\tau_m,\delta_m,n_m,m\} \quad (5)$$

[0084] The effect vector shown above in Equation 5 includes the parameters described above in connection with Equation 3 and Table 1, and includes an additional parameter (in this case represented by the value m), which is referred to as the "augmentation element." The augmentation element allows the effect vector to be assigned parameters.

[0085] **FIG. 4** is a diagram illustrating a transformation matrix, according to an embodiment of the invention. In the matrix shown in **FIG. 4**, each element i has a unique row and column index expressed as two respective subscript values. Each row of the matrix shown in **FIG. 4** is populated using effect vectors, such as the effect vector shown in Equation 5 above. The index values are shown in the same order along each row and column for reference. Elements that have the identical row and column indices (i.e., elements along the diagonal of the matrix) perform a direct mapping of effect parameters. Thus, for example, if the first element $i_{\alpha\alpha}$ has a value other than zero, that value directly transforms the amplitude of the effect instructions received from the application **302** (shown in **FIG. 3A**). The last row of the matrix shown in **FIG. 4** allows additional effect parameters to be introduced into the transformation performed on the effect instructions received from the application **302**.

[0086] A matrix having values only in the diagonal element locations is known as a scaler matrix. According to one or more embodiments of the invention, a scaler matrix of the form of the matrix shown in **FIG. 4** can be used to directly scale the parameters. For example, a scaler matrix can directly scale the parameters described above in connection with Equation 1, which are associated with effect instructions received from the application **302**. Alternatively, altering other matrix elements causes parameters of effect instructions received from the application **302** to be mapped in various different ways, some of which will be described in detail below. Additionally, the effect of manipulating some elements of the matrix shown in **FIG. 4** on the transformations performed on the effect instructions received from the application **302** will be discussed below.

[0087] Because various haptic devices **124** may respond differently to instructions to execute haptic sensations, manipulating the values within a transformation matrix can alter the haptic sensations provided by a haptic device **124** in a desirable manner. For example, certain haptic devices **124** may produce a stronger haptic sensation when being driven by a signal having the form of a square wave rather than a sinusoidal signal. This higher perceived square-wave amplitude can be compensated in haptic devices by changing the $i_{\omega x}$, term, which maps the shape of the haptic instructions signal (i.e., the waveform) to the amplitude of the haptic device **124**.

[0088] Depending on physical characteristics of the haptic device **124** being used, a variety of equalization parameters may be required. For example, users using similar interface devices **120** (e.g. cell phones, gaming systems, etc.), would expect to perceive similar haptic sensations provided via the haptic device **124** for similar events. Thus, for example, users of gaming systems would expect to perceive events similarly on different individual interface devices **120** provided by a common manufacturer. Likewise, users may expect to perceive haptic sensations provided by different devices (from either the same or different manufacturers), but which are portraying events from similar applications, in a similar manner.

[0089] Equalization is a technique whereby differences among haptic devices **124** can be accounted for, so that haptic sensations provided by haptic devices **124** having varying physical characteristics can be produced in a substantially uniform manner. For example, some parameters of the haptic device **124** that may require equalization include frequency response, phase, period, and start delay. These parameters can be transformed using a matrix of the form of the matrix shown in **FIG. 4**, which has non-zero values for the parameters i_{wx}, $i_{\phi x}$, $i_{\tau x}$, and $i_{\delta x}$, respectively (where x represents any row of the matrix shown in **FIG. 4**). Each of these terms maps the frequency response, phase, period, and start delay into haptic sensation amplitude.

[0090] Some haptic devices **124** may exhibit greater friction than others. For example, in the case of haptic devices that use a rotating mass to provide vibrotactile feedback, higher friction could correspond to a longer delay in reaching full speed, which corresponds to a delay in achieving the full amplitude of a desired haptic sensation. A transformed matrix having a value entered for i_α will provide an additional bias to the actuator of the haptic device **124**, such that friction of the haptic device **124** and its actuator can be compensated. According to one or more embodiments of the invention, changing the term i_α provides a bias that is proportional to the energy delivered from the haptic device **124**. Alternative embodiments of the invention can provide a bias that is proportional to energy delivered to the haptic device **124**. The type of bias provided by embodiments of the invention can be varied depending upon design constraints, and desired functionality.

[0091] Additional transforms of the effect instructions received from the application **302** may be desired. For example, to convey a perception of high amplitude to a user of the haptic device **124**, the waveform of the effect instruction signal can be modified. For example, an effect instruction signal can be varied by allowing saturation. By way of such a saturation technique, the amplitude of the effect instructions is mapped to the waveform by modifying the element $i_{\alpha\psi}$. Modifying this term has a similar effect to saturating an audio amplifier, and thus converts sinusoidal

waveforms into square-like waveforms, and introduces high frequency components into the transformed effect instructions. The perceived output has an increased apparent magnitude. The haptic sensation produced by a saturation technique has a different feel from haptic sensations produced by way of standard sinusoidal effect instructions. Each of the transforms described above can be used in connection with any haptic device **124** systems, such as systems utilizing harmonic haptic devices or systems using non-harmonic haptic devices.

[**0092**] According to one or more embodiments in which the haptic device **124** uses rotating mass in a harmonic operational mode, the mass of the haptic device **124** undergoes a shorter, angular displacement at maximum amplitudes. This shorter angular displacement results in part from the mass displacement being conveyed as harmonic content rather than eccentric mass content. Lower frequency effects or effects within a unidirectional operational mode, on the other hand, benefit from the summation of two acceleration vectors. Frequency-waveform mapping alters the shape of the effect instructions received from the application **302** at high frequencies to boost the apparent amplitude of those high frequency effects. This mapping can be accomplished, for example, by changing the value of the $i_{\omega\psi}$within the transformation matrix being used. Similarly, phase, duration, and start delay can also be mapped to waveform shape, by changing the terms $i_{\phi\psi}$, $i_{\tau\psi}$, and $i_{\delta\psi}$in the transformation matrix, respectively.

[**0093**] Signal mode haptic devices, or harmonic haptic devices acting in a "unidirectional" operational mode, provide a force to the body of the housing of the haptic device **124** (e.g., the housing of the interface device **120**). In haptic devices that use rotating masses, the force applied to the housing of the haptic device **124** is related to the velocity with which the mass of the haptic device **124** rotates. Specifically, in rotating mass haptic devices **124**, the force applied to the housing of the haptic device **124** is directly proportional to the square of the rotational velocity of the mass.

[**0094**] The force of a haptic device using a rotational mass is only perceived by the user above a certain velocity threshold. Thus, until this velocity threshold has been reached, the user does not perceive the force. Hence, a delay exists from the time when an effect instruction first begins to be executed until the user perceives the haptic sensation of the haptic device **124**. In the case of a rotating mass haptic device **124**, for example, this delay corresponds to the time it takes for the rotating mass to start rotating. This start-up time can be reduced by applying a large voltage for a short duration at the beginning of the haptic instructions. Said another way, a start-up pulse can be applied to the effect instructions received from the application **302** to provide quicker start-up times for haptic sensations provided by the haptic device **124**.

[**0095**] Similarly, when haptic sensations are terminated, a delay exists between the time when the effect is commanded to be terminated (e.g., by effect instructions), and the time when the user perceives termination of the haptic sensation. In the case of a rotating mass haptic device **124**, for example, this delay corresponds to the time for a rotating mass to completely stop. This delay can be reduced by applying a "braking" pulse of current in the opposite direction of the motion of the rotating mass. A more detailed description of the start-up pulse and the braking pulse is provided in co-pending U.S. Application No. [Attorney Docket No. IMMR-093/00US], entitled System and Method for Controlling Haptic Devices Having Multiple Operational Modes, which is incorporated by reference above.

[**0096**] **FIG. 5** is a diagram illustrating matrix transformation of effect instructions according to an embodiment of the invention. In **FIG. 5**, an effect instruction **502** in the form of a sinusoidal drive signal is received by the controller **130** from the application **302** (shown in **FIG. 3A**). Within the controller, the effect mapper **306** uses three transformation matrices **504**, **506**, **508** to transform the received effect instructions into transformed effect instructions.

[**0097**] The first transformation matrix M_i **504** is an initiation transformation matrix that transforms the incoming effect instructions to provide initiation transformed effect instructions, such as a lead-in effect or the like. The second matrix M_s **506** is a sustaining transformation matrix that transforms the incoming effect instructions **502** into transformed effect instructions. Specifically, the sustaining matrix **506** provides the middle portion of each of the transformed effect instructions. A third matrix M_t **508** is a termination transformation matrix that transforms the effect instructions into termination transformed effect instructions. For example, the termination matrix **508** may provide such termination effects as a braking pulse, or the like.

[**0098**] Each of the transformed effect instructions created by the effect mapper **306** are provided to the effect combiner/sequencer **308**, which sequences the transformed effect instructions so that the each of the initiation transformed effect instructions is first, each of the sustaining transformed effect instructions is second, and each of the termination transformed effect instructions is last. Additionally, where transformed effect instructions from each of the transformation matrices of the effect mapper overlap temporally, those transformed effect instructions are combined by the effect combiner/sequencer **308**, such as by superposition, or other suitable method, for example. The controller **130** then outputs haptic instructions, which are produced by the effect combiner/sequencer **308**, to the synthesizer/linearizer **304**.

[**0099**] Examples of suitable transformation matrices **504**, **506**, **508** used by the effect mapper **306** to create transformed effect instructions from the received effect instructions **502** are shown in **FIGS. 6A, 6B**, and 6C, respectively.

[**0100**] **FIG. 6A** is a diagram illustrating an initiation transformation matrix M_i **504**, according to an embodiment of the invention. In the matrix shown in **FIG. 6A**, the term $i_{\alpha\alpha}$has a value of 2, which corresponds to an amplitude value that is double the amplitude of the received effect instructions. The value of the term $i_{\psi}$is 1, which corresponds to a square wave. Thus, the initiation or lead-in effect provided by way of the initiation matrix M_i **504** involves a square-wave pulse having an amplitude that is twice the amplitude of the received effect instructions. The duration of the effect indicated by the element $i_{\omega\tau}$is 2, which corresponds to two frequency periods of the received effect instructions. The frequency, phase, and time delay remain unchanged for the initiation matrix **504**, as the values of the indices $i_{\omega\omega}$, and $i_{\delta\delta}$are each 1.

[**0101**] **FIG. 6B** is a diagram illustrating a sustaining transformation matrix M_s **506**, according to an embodiment

of the invention. The shape of the received effect instructions **502** remains unchanged as each of the values of the elements $i_{\alpha\alpha}$, $i_{\phi\phi}$, $i_{\omega\omega}$, $i_{\psi\psi}$, $i_{\tau\tau}$, $i_{\delta\delta}$and i_{nn} along the diagonal of the matrix is 1. The duration of the effect, however, is less than the received effect instructions by four frequency periods, as the value of the index $i_{\omega\tau}$is −4. Note that two of these periods are used by the initiation transformation matrix M_i **504**, and two are used by the termination transformation matrix M_t **508**. The transformed effect instruction provided by the sustaining transformation matrix M_s **506** is delayed by two periods of the received effect instructions **502**. That is, the transformed effect instructions provided by the sustaining transformation matrix M_s begin only after the two frequency periods of the transformed effect instructions provided by the initiation transformation matrix M_i have passed. Note that the delay inherent in the received effect instructions **502** is accounted for in the value of 1 in the index $i_{\delta\delta}$of the matrix shown in **FIG. 6B**.

[**0102**] **FIG. 6C** is a diagram illustrating a termination transformation matrix M_t **508** used according to an embodiment of the invention. The termination matrix **508** shown in **FIG. 6C** doubles the magnitude of the received effect instructions **502**, as can be seen by the value of 2 for the element $i_{\alpha\alpha}$. Additionally, the waveform is transformed to a square-wave as the value of the i_{ψ}element is 1. The signal is also inverted, as the value of the phase is set to a −1 in the $i_{\phi\phi}$element.

[**0103**] The duration of the transformed effect instructions provided by way of the termination transformation matrix M_t **508** is two frequency periods of the received effect instructions **502**, as the value of the index $i_{\omega\tau}$is two. The delay of the transformed effect instructions provided by way of the termination transformation matrix M_t **508** is equivalent to the duration of the received effect instructions **502** (i.e., $i_{\tau\delta}$=1) minus the duration of the termination effect (i.e., $i_{\omega\delta}$=−2) plus the additional delay inherent in the termination effect (i.e., $i_{\delta\delta}$=1).

[**0104**] Thus, if the received effect instructions **502** are a sinusoidal wave, the transformed effect instructions provided by the effect mapper **306** to the effect combiner/sequencer **308** would include a lead-in effect produced by the initiation transformation matrix M_i **504**, a sustaining transformed effect instruction produced by the sustaining transformation matrix M_s **506**, and a termination transformed effect instruction produced by the termination transformation matrix M_t **508**. The haptic instructions output by the controller **130** include a lead-in square-wave signal having double the amplitude of the received effect instructions **502**, and having a duration of two periods. The lead-in signal is followed by the sinusoidal signal of the effect instructions beginning after the lead-in signal, and terminating two periods prior to the termination of the received effect instructions **502**. The termination signal follows immediately, and includes a square-wave having double the amplitude of the received effect instructions **502**, and having an opposite polarity to provide a braking pulse.

[**0105**] According to one or more embodiments of the invention, a lead-in pulse can be used in combination with a sustaining effect. For example, the lead-in effect described in connection with the initiation transformation matrix M_i **504** shown in **FIG. 6A** can be used to overcome the static coefficient of friction associated with the haptic device **124**. The sustaining effect associated with the sustaining transformation matrix M_s **506** described above in connection with **FIG. 6B** can be used to overcome the kinetic friction within the haptic device **124** (e.g., within the actuator of the haptic device **124**). These two effects can be invoked simultaneously by changing the value in the i_{α}term of the matrix shown in **FIG. 6A** to one.

[**0106**] Other types of matrices (i.e., other than those shown in **FIGS. 5, 6A**, 6B, and 6C above) can be used in the system shown in **FIG. 5**. For example, a wavelet transformation matrix M_w can be used to "gate" effect instructions. In accordance with one or more embodiments that use a harmonic haptic device **124** capable of operating in a harmonic mode, a pulse having a given duration τ can be applied to the resonant haptic device **124**, which results in gating the resonant mode actuation of the haptic device **124** for the given duration τ. **FIG. 7** is a diagram illustrating a wavelet transformation matrix M_w used according to an embodiment of the invention.

[**0107**] In **FIG. 7**, the shape of the periodic function used to gate the resonant mode actuation of the haptic device **124** is a sinusoid, as the value of the index $i_{\psi}$is sin. The frequency of the wave function is set to the resonant frequency ω_r of the haptic device **124** (i.e., the i_{ω}element= ω_r). The duration of the pulse packet, however, is the same as the commanded pulse duration, such that the value of the $i_{\tau\tau}$element is 1.

[**0108**] The haptic device **124** can be operated in a low-frequency or unidirectional operational mode. One technique for operating the device in a low-frequency mode is using a pulsed haptic instruction to command a low-frequency haptic sensation. Using such a pulse, the low-frequency effect is mapped to a wavelet at the frequency of the received effect instructions. The duration of the low-frequency effect is mapped to the period between successive wavelets or pulse packets.

[**0109**] **FIG. 8** is a diagram illustrating a pulse mode transformation matrix M_p used according to an embodiment of the invention. In the matrix shown in **FIG. 8**, the last row of the matrix, which allows additional effect parameters to be introduced into the transformation, has several values. Specifically, the frequency of the wave function is set to the resonant frequency ω_r of the haptic device **124** (i.e., the i_{ω}element=ω_r). The duration of the pulse is set to four times the wavelength λ_r at the resonant frequency ω_r, and the delay δ is set to a time period of four times the wavelength λ_r at the resonant frequency after the initiation of the signal.

[**0110**] **FIG. 9** is a plot showing a desired output frequency and a resonant frequency of a haptic device, according to an embodiment of the invention. More specifically, **FIG. 9** illustrates a desired output sinusoidal response having a frequency of approximately 1 Hz superimposed on a higher frequency resonant mode of a harmonic haptic device **124**. By using frequency domain envelope modulation, one or more embodiments of the invention can drive such a harmonic haptic device **124** without losing the low-frequency components. This is accomplished by multiplying the low-frequency desired output sinusoidal waveform with the higher frequency resonant mode waveform. The multiplication can be accomplished for example, in real-time. The resulting waveform is shown in **FIG. 10**.

[0111] **FIG. 10** is a plot showing a modulated signal used to drive a haptic device according to an embodiment of the invention. To produce the modulated signal shown in **FIG. 10**, two matrices M_1, M_2 shown in **FIGS. 11A and 11B**, respectively, can be used by the effect mapper.

[0112] By using frequency domain envelope modulation, low-frequency and high-frequency filters are used to filter each of the waveforms shown in **FIG. 9**. The low-frequency signal is then used as an envelope to modulate the high frequency signal, resulting in the plot shown in **FIG. 10**.

[0113] This modulation can be accomplished by operating on the effect vectors in the frequency domain. In the frequency domain, the transformation uses the trigonomic relationship shown below in Equation 6.

$$\sin A \sin B = \frac{1}{2}\cos(A-B) - \frac{1}{2}\cos(A+B) \tag{6}$$

[0114] Using the transformation matrices M_1, M_2 shown in **FIGS. 11A and 11B**, respectively, the frequency domain envelope modulation transformation can be accomplished using Equation 7 shown below.

$$\epsilon' = \epsilon M_1 + \epsilon M_2 \tag{7}$$

[0115] In Equation 7 above, the effect ϵ is transformed by the two transformation matrices M_1 and M_2. The result of the first transformation is modulated with the result of the second transformation (or vice-versa) to produce a modulated effect ϵ'.

[0116] The summation step takes place in the effect combiner/sequencer **308** (shown in **FIGS. 3B, 3C** and **5**), and the net effect is an amplitude modulation of the resonant frequency by the frequency of the received effect instructions **502**. For example, if the received effect instructions have a square waveform, modulation results in a triangular amplitude modulation of the resonant frequency.

[0117] As mentioned above, a harmonic haptic device **124** can operate in two operational modes: a unidirectional operational mode and a harmonic operational mode. Generally speaking, the unidirectional operational mode corresponds to haptic instructions, or drive signals provided to the haptic device **124**, that have low frequencies. On the other hand, the harmonic operational mode of a harmonic haptic device **124** generally corresponds to higher frequencies of haptic instructions, or drive signals provided to the haptic device **124**. Thus, low frequencies, including direct current (DC) signals could drive the haptic device **124** in the unidirectional mode. A DC signal can be viewed as a signal having zero frequency, or a square wave of an infinite period. To provide smooth transitions between the harmonic operational mode and the unidirectional operational mode, blending between these two operational modes may be desirable.

[0118] One technique for blending between a unidirectional operational mode and a harmonic operational mode uses gain functions associated with each of the operational modes. A first gain G_1 can be associated with the unidirectional operational mode, and is defined as shown below in Equation 8.

$$G_1 = 1 - \frac{1}{\left(1 + \frac{f}{f_c}\right)} \tag{8}$$

[0119] In Equation 8 above, the gain profile of the first gain G_1 is defined over a range of frequencies f. At a central frequency f_c, or frequency of interest, the value of the first gain G_1 is ½. The first gain profile acts as a low-pass filter on the received effect instructions. The frequencies f relate to periodic frequencies ω by the relationship shown below in Equation 9.

$$f = \frac{\omega}{2\pi} \leftrightarrow \omega = 2\pi f \tag{9}$$

[0120] A second gain G_2 can be associated with the harmonic operational mode, and it is described in Equation 10 below.

$$G_2 = \frac{1}{\left(1 + \frac{f}{f_c}\right)} \tag{10}$$

[0121] At a central frequency f_c, or frequency of interest, the value of the second gain G_2 is ½. The second gain profile acts as a high-pass filter on the effect instructions.

[0122] **FIG. 12** is a plot showing these gains G_1, G_2 associated with blending functions in each of the multiple operational modes of a harmonic haptic device **124**. Although the gain functions shown in **FIG. 12** are useful to provide blending between multiple operational modes of a harmonic haptic device **124**, other alternative blending functions exist.

[0123] In another example, a sinusoidal blending function, such as the one shown below in Equation 11, can be used to blend responses from multiple operational modes of a harmonic haptic device **124**.

$$\xi = \cos\left(\frac{\omega}{\omega_r}\right) \tag{11}$$

[0124] The blending function shown above in Equation 11 can be obtained using a mapping transformation matrix M_x. **FIG. 13** is a diagram illustrating a mapping transformation matrix M_x, according to an embodiment of the invention. The period of the effect of the function shown in Equation 11 is set to its maximum value represented by $i_w = \infty$.

[0125] The gain of the unidirectional operational mode is expressed below in Equation 12.

$$\sin\left(\frac{1}{2}\pi\frac{\omega}{\omega_r}+\frac{\pi}{2}\right)=\cos\left(\frac{1}{2}\pi\frac{\omega}{\omega_r}\right) \tag{12}$$

[0126] From the foregoing, it can be seen that systems and methods for mapping haptic sensations are discussed. Specific embodiments have been described above in connection with rotating mass haptic devices that use one or more rotating masses to provide vibrotactile feedback. Additionally, specific embodiments have been described in the context of multi-mode haptic devices that have multiple operational modes.

[0127] It will be appreciated, however, that embodiments of the invention can be in other specific forms without departing from the spirit or essential characteristics thereof. For example, while some embodiments have been described in the context of rotating mass haptic devices and multi-mode haptic devices, many other types of haptic devices can use the mapping techniques described herein. Additionally, systems and methods of the invention can be useful in any situations where the mapping of received instructions to haptic instructions is desired. The presently disclosed embodiments are, therefore, considered in all respects to be illustrative and not restrictive. Specifically, matrix operations need not specifically use matrix operators but may be reduced to equivalent arithmetic operations.

What is claimed is:

1. A processor-readable medium storing code representing instructions to cause a processor to perform a process, the code comprising code to:

receive an effect instruction;

map the received effect instruction to at least one haptic instruction based on an effect mapping schema and based at least partially on a pre-determined characteristic of a haptic device model; and

transmit at least one haptic signal to a first haptic device, the at least one haptic signal being based on the at least one haptic instruction.

2. The processor-readable medium of claim 1, wherein the haptic device model corresponds to the first haptic device.

3. The processor-readable medium of claim 1, further comprising code to:

cause the first haptic device to move in response to the transmitted at least one haptic signal.

4. The processor-readable medium of claim 1, further comprising code to:

synthesize the at least one haptic instruction in real-time to create at least one synthesized haptic instruction, the at least one haptic signal being based on the at least one synthesized haptic instruction.

5. The processor-readable medium of claim 1, further comprising code to:

linearize the at least one haptic instruction in real-time to create at least one linearized haptic instruction, the at least one haptic signal being based on the at least one linearized haptic instruction.

6. The processor-readable medium of claim 1, further comprising code to:

superimpose multiple haptic instructions from the at least one haptic instruction to create at least one superimposed haptic instruction, the at least one haptic signal being based on the at least one superimposed haptic instruction.

7. The processor-readable medium of claim 1, further comprising code to:

receive a plurality of effect instructions;

select a set of effect instructions from the received plurality of effect instructions; and

map each effect instruction from the selected set of effect instructions to at least one haptic instruction according to an effect mapping schema.

8. The processor-readable medium of claim 1, wherein the code to map includes code to associate each effect instruction from the selected set of effect instructions to at least one haptic instruction via a pre-defined matrix relationship.

9. The processor-readable medium of claim 1, wherein the code to map includes code to map an amplitude of at least one waveform of an effect instruction from the selected set of effect instructions.

10. The processor-readable medium of claim 1, wherein the code to map is configured to map at least partially based on a frequency response of the haptic device model.

11. The processor-readable medium of claim 1, wherein the code to map is configured to map at least partially based on friction of the first haptic device.

12. The processor-readable medium of claim 1, wherein the code to map is configured to map at least partially based on distortion of at least one waveform of the received effect instruction.

13. The processor-readable medium of claim 1, wherein the code to map includes code to modify a shape of a waveform of the at least one haptic instruction to produce at least one modified haptic instruction, an output of the haptic device being associated with the at least one modified haptic instruction.

14. The processor-readable medium of claim 1, further comprising code to:

control the haptic device using position feedback, the code to transmit at least one force instruction being based partially on the position feedback.

15. The processor-readable medium of claim 1, further comprising code to:

control the haptic device using a peak angular efficiency model, the code to transmit at least one force instruction being based partially on the peak angular efficiency model.

16. The processor-readable medium of claim 1, further comprising code to:

control the haptic device using one of force transducer feedback and accelerometer feedback, the code to transmit at least one force instruction being based partially on the one of the force transducer feedback and accelerometer feedback.

17. The processor-readable medium of claim 1, further comprising code to:

control the haptic device using torque transducer feedback, the code to transmit at least one force instruction being based partially on the torque transducer feedback.

18. The processor-readable medium of claim 1, further comprising code to:

control the haptic device using a ripple torque compensation, the code to transmit at least one force instruction being based partially on the ripple torque compensation.

19. The processor-readable medium of claim 1, further comprising code to:

control the haptic device using force vectoring, the code to transmit at least one force instruction being based partially on the force vectoring.

20. The processor-readable medium of claim 1, further comprising code to:

control the haptic device using velocity feedback, the code to transmit at least one force instruction being based partially on the velocity feedback.

21. An apparatus, comprising:

a controller configured to receive effect instructions from at least one application, the controller including an effect mapper, the effect mapper being configured to produce a plurality of haptic instructions in response to at least a portion of the received effect instructions, the haptic instructions being at least partially based on a physical characteristic of a haptic device.

22. The apparatus of claim 21, further comprising:

a synthesizer in communication with the effect mapper, the synthesizer being configured to synthesize the plurality of haptic instructions to produce a plurality of synthesized haptic signals.

23. The apparatus of claim 21, further comprising:

a synthesizer in communication with the effect mapper, the synthesizer being configured to synthesize the plurality of haptic instructions to produce a plurality of synthesized haptic signals, the synthesized haptic signals being configured to cause a haptic device to generate haptic sensations.

24. The apparatus of claim 21, further comprising:

a synthesizer in communication with the effect mapper, the synthesizer being configured to synthesize the plurality of haptic instructions in real-time to produce a plurality of synthesized haptic signals, the synthesized haptic signals being configured to cause a haptic device to generate haptic sensations.

25. The apparatus of claim 21, further comprising:

a synthesizer in communication with the effect mapper, the synthesizer being configured to synthesize the plurality of haptic instructions to produce a plurality of synthesized haptic signals, the synthesized haptic signals being configured to cause a haptic device to generate haptic sensations; and

a haptic device in communication with the synthesizer, the haptic device being configured to receive the plurality of synthesized haptic signals.

26. The apparatus of claim 21, wherein the controller includes the effect mapper.

27. The apparatus of claim 21, wherein the effect mapper is configured to modify the effect instructions received by the controller to produce the haptic instructions.

28. The apparatus of claim 27, wherein the controller is configured to pre-filter the received effect instructions.

29. The apparatus of claim 21, wherein the effect mapper is configured to select a set of the effect instructions received by the controller.

30. The apparatus of claim 21, wherein the controller is further configured to modify the plurality of haptic instructions produced by the effect mapper.

31. The apparatus of claim 21, further comprising:

an effect combiner in communication with the effect mapper, the effect combiner configured to superimpose the plurality of haptic instructions produced by the effect mapper to form superimposed haptic instructions.

32. The apparatus of claim 21, further comprising:

an effect combiner in communication with the effect mapper, the effect combiner configured to superimpose the received effect instructions to form superimposed effect instructions, the effect combiner being further configured to communicate the superimposed effect instructions to the effect mapper.

33. The apparatus of claim 21, further comprising:

an effect combiner in communication with the effect mapper, the effect combiner configured to normalize the received effect instructions to form normalized effect instructions, the effect combiner being further configured to communicate the normalized effect instructions to the effect mapper.

34. The apparatus of claim 21, further comprising:

a linearizer in communication with the controller, the linearizer being configured to linearize the haptic instructions to produce linearized haptic instructions.

35. The apparatus of claim 21, wherein the effect mapper uses values stored in a matrix to map each of the received effect instructions to at least one of the plurality of haptic instructions.

36. The apparatus of claim 21, wherein the effect mapper uses values stored in a plurality of matrices to map each of the received effect instructions to at least one of the plurality of haptic instructions.

37. The apparatus of claim 21, wherein the controller includes a switching controller.

38. An apparatus, comprising:

a controller configured to receive a plurality of effect instructions, the controller including an effect mapper, the effect mapper configured to receive the plurality of effect instructions and to produce a plurality of haptic instructions based on at least one pre-determined parameter, the at least one pre-determined parameter being associated with at least one physical characteristic of a haptic device configured to execute the plurality of haptic instructions; and

a linearizer in communication with the effect mapper, the linearizer configured to modify at least one haptic instruction from the plurality of haptic instructions.

39. The apparatus of claim 38, wherein the linearizer is configured to modify in real-time at least one haptic instruction from the plurality of haptic instructions.

40. The apparatus of claim 38, further comprising:

a synthesizer in communication with the effect mapper, the synthesizer being configured to synthesize the plurality of haptic instructions to produce a plurality of synthesized haptic signals.

41. The apparatus of claim 38, further comprising:

a synthesizer in communication with the effect mapper, the synthesizer being configured to synthesize the plurality of haptic instructions in real-time to produce a plurality of synthesized haptic signals.

42. The apparatus of claim 38, further comprising:

a synthesizer in communication with the effect mapper, the synthesizer being configured to synthesize the plurality of haptic instructions to produce a plurality of synthesized haptic signals; and

a haptic device in communication with the synthesizer, the haptic device being configured to receive the plurality of synthesized haptic signals.

43. The apparatus of claim 38, wherein the controller includes the effect mapper.

44. The apparatus of claim 38, wherein the effect mapper is configured to modify the plurality of effect instructions received by the controller to produce the haptic instructions.

45. The apparatus of claim 44, wherein the controller is configured to pre-filter the plurality of received effect instructions.

46. The apparatus of claim 38, wherein the effect mapper is further configured to select a set from the plurality of effect instructions.

47. The apparatus of claim 38, wherein the controller is further configured to modify the plurality of haptic instructions produced by the effect mapper.

48. The apparatus of claim 38, further comprising:

an effect combiner in communication with the effect mapper, the effect combiner being configured to superimpose the received plurality of effect instructions.

49. The apparatus of claim 38, further comprising:

an effect combiner in communication with the effect mapper, the effect combiner configured to superimpose the plurality of haptic instructions produced by the effect mapper to form superimposed haptic instructions.

50. The apparatus of claim 38, further comprising:

an effect combiner in communication with the effect mapper, the effect combiner configured to superimpose the plurality of received effect instructions to form superimposed effect instructions, the effect combiner being further configured to communicate the superimposed effect instructions to the effect mapper.

51. The apparatus of claim 38, further comprising

an effect combiner in communication with the effect mapper, the effect combiner configured to normalize the received plurality of effect instructions to form normalized effect instructions, the effect combiner being further configured to communicate the normalized effect instructions to the effect mapper.

52. The apparatus of **38**, wherein the effect mapper uses values stored in a matrix to map each of the received plurality of effect instructions to at least one of the plurality of haptic instructions.

53. The apparatus of **38**, wherein the effect mapper uses values stored in a plurality of matrices to map each of the received effect instructions to at least one of the plurality of haptic instructions.

54. The apparatus of claim 38, wherein the controller includes a switching controller.

55. A method comprising;

receiving an effect instruction;

mapping the received effect instruction to at least one haptic instruction based on an effect mapping schema, the mapping being based at least partially on a predetermined characteristic of a haptic device model; and

transmitting at least one haptic signal to a haptic device, the at least one haptic signal being based on the at least one haptic instruction.

56. The method of claim 55, wherein the haptic device model corresponds to the first haptic device.

57. The method of claim 55, further comprising:

causing the haptic device to move in response to the transmitted at least one haptic signal.

58. The method of claim 55, further comprising:

synthesizing the at least one haptic instruction in substantially real-time to create at least one synthesized haptic instruction, the at least one haptic signal being based on the at least one synthesized haptic instruction.

59. The method of claim 55, further comprising:

linearizing the at least one haptic instruction in substantially real-time to create at least one linearized haptic instruction, the at least one haptic signal being based on the at least one linearized haptic instruction.

60. The method of claim 55, further comprising:

superimposing multiple haptic instructions from the at least one haptic instruction to produce at least one superimposed haptic instruction, the at least one haptic signal being based on the at least one superimposed haptic instruction.

61. The method of claim 55, further comprising:

receiving a plurality of effect instructions;

selecting a set of effect instructions from the received plurality of effect instructions; and

mapping each effect instruction from the selected set of effect instructions to at least one haptic instruction according to an effect mapping schema.

62. The method of claim 55, wherein the mapping includes:

associating each effect instruction from the selected set of effect instructions to at least one haptic instruction via a pre-defined matrix relationship.

63. The method of claim 55, wherein the mapping includes:

mapping an amplitude of at least one waveform of an effect instruction from the selected set of effect instructions.

64. The method of claim 55, wherein the mapping is at least partially based on a frequency response of the haptic device model.

65. The method of claim 55, wherein the mapping is at least partially based on friction of the haptic device.

66. The method of claim 55, wherein the mapping is at least partially based on distortion of at least one waveform of the received effect instruction.

67. The method of claim 55, wherein the mapping includes:

modifying a shape of a waveform of the at least one haptic instruction to produce at least one modified haptic instruction, an output of the haptic device being associated with the at least one modified haptic instruction.

68. The method of claim 55, further comprising:

controlling the haptic device using position feedback, the transmitting at least one force instruction being based partially on the position feedback.

69. The method of claim 55, further comprising:

controlling the haptic device using a peak angular efficiency model, the transmitting at least one force instruction being based partially on the peak angular efficiency model.

70. The method of claim 55, further comprising:

controlling the haptic device using one of force feedback and accelerometer feedback, the transmitting at least one force instruction being based partially on the one of the force feedback and the accelerometer feedback.

71. The method of claim 55, further comprising:

controlling the haptic device using torque feedback, the transmitting at least one force instruction being based partially on the torque feedback.

72. The method of claim 55, further comprising:

controlling the haptic device using a ripple torque compensation, the transmitting at least one force instruction being based partially on the ripple torque compensation.

73. The method of claim 55, further comprising:

controlling the haptic device using force vectoring, the transmitting at least one force instruction being based partially on the force vectoring.

74. The method of claim 55, further comprising: controlling the haptic device using velocity feedback, the transmitting at least one force instruction being based partially on the velocity feedback.

* * * * *